# Official Transcript of Proceedings

# NUCLEAR REGULATORY COMMISSION

Title: Advisory Committee on Reactor Safeguards
APR 1400 Subcommittee Meeting

Docket Number: (n/a)

Location: Rockville, Maryland

Date: Wednesday, September 21, 2016

Work Order No.: NRC-2629 Pages 1-362

NEAL R. GROSS AND CO., INC.
Court Reporters and Transcribers
1323 Rhode Island Avenue, N.W.
Washington, D.C. 20005
(202) 234-4433

1
2
3
4 DISCLAIMER
5
6
7 UNITED STATES NUCLEAR REGULATORY COMMISSION'S
8 ADVISORY COMMITTEE ON REACTOR SAFEGUARDS
9
10
11 The contents of this transcript of the
12 proceeding of the United States Nuclear Regulatory
13 Commission Advisory Committee on Reactor Safeguards,
14 as reported herein, is a record of the discussions
15 recorded at the meeting.
16
17 This transcript has not been reviewed,
18 corrected, and edited, and it may contain
19 inaccuracies.
20
21
22
23

UNITED STATES OF AMERICA

NUCLEAR REGULATORY COMMISSION

+ + + + +

ADVISORY COMMITTEE ON REACTOR SAFEGUARDS

(ACRS)

+ + + + +

APR1400 SUBCOMMITTEE

+ + + + +

WEDNESDAY

SEPTEMBER 21, 2016

+ + + + +

ROCKVILLE, MARYLAND

+ + + + +

The Subcommittee met at the Nuclear Regulatory Commission, Two White Flint North, Room T2B1, 11545 Rockville Pike, at 8:30 a.m., Ronald G. Ballinger, Chairman, presiding.

COMMITTEE MEMBERS:

RONALD G. BALLINGER, Chairman

CHARLES H. BROWN, JR., Member

JOSE A. MARCH-LEUBA, Member

DANA A. POWERS, Member

JOY REMPE, Member

PETER C. RICCARDELLA, Member

GORDON R. SKILLMAN, Member

JOHN W. STETKAR, Chairman

MATTHEW W. SUNSERI, Member

DESIGNATED FEDERAL OFFICIAL:

CHRISTOPHER L. BROWN

ALSO PRESENT:

TONY AHN, KHNP

JOHN BUDZYNSKI, NRO

BOB CALDWELL, NRO

LUISSETTE CANDELARIO, NRO

SEOGNAM CHOI, KHNP

WOOCHONG CHON, KEPCO NF

JEFF CIOCCO, NRO

STEPHANIE DEVLIN-GILL, NRO

STEVEN DOWNEY, NRO

DAVID HEESTEL, NRO

JOHN HONCHARICK, NRO

SEOKHWAN HUR, KEPCO E&C

JUNG BOM JANG, KEPCO E&C

GYUN DO JEONG, KHNP

HYGOK JEONG, KEPCO E&C

JONGSOO KIM, KHNP

JUNGHO KIM, KHNP

MINSEOK KIM, KHNP

TAE HAN KIM, KEPCO E&C

YUNHO KIM, KHNP

KWANG-HOON KOH, KHNP

SUNGUK KWON, KHNP

MICHAEL LEE, NRO

DONG-SU LEE, KHNP

YONGSUN LEE, KEPCO E&C

CHANG-YANG LI, NRO

KWANGIL LIM, KEPCO, E&C

GREG MAKAR, NRO

MICHAEL D. MAZAIKA, NRO

ANDY OH, KHNP

ROBERT ROCHE-RIVERA, NRO

RICARDO RODRIGUEZ, NRO

TAE SUN RO, KEPCO E&C

JAMES ROSS, KHNP/AECOM

TARUN ROY, NRO

ROB SISK, Westinghouse

DUK BIN SONG, KEPCO E&C

JAMES STECKEL, NRO

ANGELO STUBBS, NRO

JEONG KWAN SUH, KHNP

SESHAGIRI TAMMARA, NRO

VAUGHN THOMAS, NRO

JESSICA UMANA, NRO

WILLIAM WARD, NRO

JASON WHITE, NRO

DAN WIDREVITZ, NRO

SEOK JEONG YUNE, KEPCO E&C

*Present via telephone

A G E N D A

Opening Remarks and Objectives.....6

Staff Opening Remarks.....8

APR1400 Design Overview.....11

Chapter 2.....26

Break.....55

Chapter 2 (Continued).....56

Chapter 5.....81

Break.....110

Committee Discussion.....110

Adjourn.....203

1 P R O C E E D I N G S

2 8:30 a.m.

3 CHAIRMAN BALLINGER: The meeting will
4 come to order. This is a meeting of the APR1400
5 Subcommittee on the Advisory -- of the Advisory
6 Committee of Reactor Safeguards.

7 I'm Ron Ballinger, Chairman of the
8 APR1400 Subcommittee. ACRS Members present are
9 hopefully Pete Riccardella, Dick Skillman, Dana
10 Powers, Matt Sunseri, John Stetkar, Jose March-
11 Leuba, Joy Rempe, Chris Brown, not Chris Brown --

12 MEMBER BROWN: Charlie Brown.

13 CHAIRMAN BALLINGER: Charlie Brown, and
14 whoever else might show up halfway through this.

15 The purpose of today's meeting is for
16 the Subcommittee to receive briefings from -- by
17 the way, Chris Brown is the Designated Federal
18 Official.

19 The purpose of today's meeting is for
20 the Subcommittee to receive briefings from KHNP
21 regarding their Design Certification Application,
22 and NRC Staff regarding their review of the Safety
23 Evaluation, specifically Chapters 2, with the
24 exception of 2.3, I think, Site Characteristics,
25 and 5, Reactor Coolant and Connected Systems.

1 During our Subcommittee meeting on
2 April 20th and 21st we received an extensive
3 briefing from KHNP on the overall design and
4 various aspects of their application that is of
5 interest to the ACRS Members.
6 The rules for participation in today's
7 meeting were announced in the Federal Register on
8 September 7th, 2016. The meeting was announced as
9 an open/closed to public meeting. This means that
10 we can close the meeting, as needed, to protect
11 information proprietary to KHNP or its vendors, and
12 you'll have to remind us if that's the case; if we
13 ask a question which is -- goes into proprietary
14 information, we can close the meeting. No requests
15 for anybody making a statement to the Subcommittee
16 has been received from the public.
17 A transcript of the meeting is being
18 kept and will be made available as stated in the
19 Federal Register Notice. Therefore, we request that
20 participants in this meeting use the microphones,
21 including myself, located throughout the meeting
22 room when addressing the Subcommittee, and please
23 identify yourself for the transcriber. Participants
24 should first identify themselves, right, and speak
25 with sufficient clarity and volume so that they can

be readily heard.

While we have a bridge line established for interested members of the public to listen in, I would advise members of the public that are listening in to put your device on mute because we run the risk of getting circular feedback which is just -- makes it tough. The bridge line number and password were published in the agenda posted on the NRC website.

The public will have an opportunity to make a statement or provide comments at a designated time towards the end of the meeting. We request that the meeting attendees and participants silence your cell phones and other electronic devices.

I now invite Jeff Ciocco, NPO -- oops, who's going to do the introduction? Oh, Bill Ward, to introduce the presenters and start the briefing.

MR. WARD: Good morning. My name is Bill Ward. I'm the Acting Branch Chief of Licensing Branch 2, which is the branch managing the review of the APR1400 design.

I'd like to thank everybody for being here. We look forward to many more meetings. This is the first of all the Phase 2, Phase 3 ACRS

1 meetings, Subcommittee meetings that we're having.
2 Over the next several months we intend to get
3 through all the chapters, and we look forward to
4 many more.
5 MR. CIOCCO: Thank you, Bill. My name is
6 Jeff Ciocco. I'm the Lead Project Manager for the
7 APR1400 Design Certification Project. I also want
8 to thank the Subcommittee Chair and your staff,
9 which we've worked very closely over the past year
10 and a half to establish this meeting, and as Bill
11 said, the following Phase 3 meetings on the APR1400
12 Design Certification Project.
13 This meeting is a very significant
14 milestone for us in the review process in that we
15 have begun completing our Phase 2 Safety Evaluation
16 Reports with Open Items. Today is a small, albeit
17 important sampling of the 22 Safety Evaluations
18 that we're going to be presenting and you'll be
19 reviewing over the next seven or nine months.
20 Back in April, I gave a project
21 overview presentation to the ACRS, and KHNP and
22 KEPCO gave a design overview, so I don't want to
23 repeat everything that I said back then, but just
24 briefly regarding this application.
25 We received the APR1400 Design

1 Certification Application in December of 2014. We
2 docketed the application in March of 2015, so right
3 now we are about a year and a half into our 42-
4 month review schedule leading to the potential
5 issuance of the final Safety Evaluation Report and
6 rulemaking.
7 This morning in KHNP's presentation on
8 the design overview they have included the overall
9 project schedule, so if you have any questions for
10 me at that time, that would be a great point.
11 And, finally, I certainly want to thank
12 our technical staff and project managers here today
13 who are going to present and answer your questions
14 on Chapters 2 and 5. They are the engines of our
15 review. So thank you very much.
16 CHAIRMAN BALLINGER: KHNP?
17 MR. Y. KIM: I am Yunho Kim. I am
18 technical project manager for APR1400, and we have
19 just, of course, go through NRC's tape review for
20 our (inaudible) document, so I think that we are
21 ready to go through your review, so we will look
22 forward to communicating with you.
23 MEMBER STETKAR: If you all could just
24 either pull the microphones closer and make sure
25 you speak up because all of our transcript comes

1 from the microphones, so we need to make sure that
2 you're loud enough so that we hear you on the
3 transcript.
4 MR. Y. KIM: Yes.
5 MEMBER STETKAR: So be careful about
6 that, please.
7 MR. Y. KIM: Yes, thank you. So I think
8 that I am going to present my material?
9 CHAIRMAN BALLINGER: Yes.
10 MR. Y. KIM: Yes. Today, this morning
11 I'm going to present overview of APR1400 DC
12 project.
13 The application of Design Certification
14 was done by KEPCO and KHNP. KEPCO and KHNP's co-
15 applicant project. KEPCO is KHNP's mother company,
16 and KHNP is the only Korean utility company in
17 Korea, and also technical management, but this
18 project was done by KHNP. So just to let you know
19 that our applicant information.
20 Today, I'm going to present the first
21 introduction as introduction. I'm going to present
22 the (inaudible) overview of APR1400, and nuclear
23 power plant in Korea. And, also, I will present
24 history. After that, I am going to present design
25 features and the general arrangement for APR1400.

1 And also (inaudible) docketing our licensing
2 material at December 2, 2014. We go through the
3 review of NRC Staff, and I will summarize that
4 review status. And, finally, I will summarize my
5 presentation.
6 This list of materials that we
7 presented last April, this year, for your
8 understanding of APR1400. That is from I think the
9 major design area of APR1400 was presented at that
10 time. So going over the material overview of this
11 project, this is same material that was done
12 before, last April, so April you are interest in
13 our design. You can see this material. I understand
14 that this material is available, too.
15 First, let me introduce nuclear power
16 plant in Korea. Currently, we have 24 units is in
17 operation. Major site is that we have the Hanul,
18 west side of Korea, and east side of Korea there
19 are three major sites; first is Hanul site, second
20 one is Wolsong site, and third site, Kori site. And
21 we are now commissioning one unit, and the third
22 unit is under construction, and six unit is
23 planned. So one unit in commissioning, that's
24 Shinkori 3. This is the reference plant for
25 APR1400. We believe that this plant is commercial

1 operation within a month. And three unit are under
2 construction, and Shinkori 4 will be commissioning
3 within next year. And Shin-Hanul 1 and 2, this is
4 also APR1400, that is under construction. And all
5 the remaining planning site is that where
6 construction will be the APR1400 (inaudible) with
7 more advanced design. We call the APR Plus Design,
8 to be constructed, yes. So this is the current --
9 our nuclear power plant.
10 Let me add that the Wolsong 1, 2, 3,
11 and 4 are the CANDU type. This is slightly
12 different from most of our pressurized water
13 nuclear design.
14 MEMBER SKILLMAN: You know, for the
15 planning units, the six units for 8600 megawatts,
16 that is 200 megawatts more than six times 1400.
17 MR. Y. KIM: For the --
18 MEMBER SKILLMAN: So these are advanced
19 units that are a higher power than 1400?
20 MR. Y. KIM: Right. Our current design
21 APR1400 megawatt electricity, for APR Plus Design
22 has more (inaudible) these 1500, so 100 more.
23 MEMBER SKILLMAN: Is the 1500 megawatt
24 electric design the same basic design with some
25 enhancements?

1 MR. Y. KIM: Basic design may be similar
2 plus some enhanced design is incorporated in there
3 like passive cooling, that kind of thing is
4 incorporated in APR Plus Design. Also, let me
5 explain that like the instrument in core, in-core
6 instrument is from down to top, but our new design
7 comes from top to down, so that comes with
8 (inaudible) incorporate, and also containment spray
9 is -- containment cooling is done with a passive
10 system, that kind of thing is incorporated -- will
11 be incorporated in our APR Plus Design.
12 MEMBER SKILLMAN: Thank you.
13 MR. Y. KIM: Next I'm going to present
14 our project organization. As I said earlier, KEPCO,
15 KHNP is co-applicant on this project. KEPCO's role
16 is that they provide funding for this project and
17 that they determine the policy decision for this
18 project. And KHNP is manager for this project in
19 terms of technical management or quality assurance,
20 that kind of thing is done by KHNP. So project
21 management was done by KHNP, and the major design
22 is done by Korea domestic company like fuel and
23 core design is done by KEPCO Nuclear Fuel, we call
24 KEPCO NF. NSSS design is done by KEPCO E&C. That is
25 the -- and the balance of plant design is done by

1 KEPCO E&CAE. AE stands for architectural
2 engineering, SD stands for system design. And the
3 major component like reactor vessel, steam
4 generator, pressurizer, that kind of design is done
5 by (inaudible).
6 Also, we have overseas consultation
7 from Westinghouse, and AECOM. Westinghouse owns the
8 combustion engineering design features our APR14
9 design is based on, so we have mutual agreement,
10 technology agreement with Westinghouse, so we share
11 information. And from AECOM we have got licensing
12 support. We have -- there are many licensing
13 activities between NRC Staff and KHNP, so AECOM is
14 supporter. And the thermal hydraulic test is done
15 by KAERI. KAERI is Korea's major nuclear research
16 and development facility, so we did TH test from
17 KAERI like fluidic device. We have in the safety
18 injection tank we have a fluidic device, so for
19 that fluidic device some hydro tests, that is done
20 by KAERI. This is the whole our project
21 organization scheme.
22 Then let me brief our APR1400 Design
23 Certification history and progress. APR1400 project
24 for Design Certification goes back to 2009. KEPCO
25 and KHNP determined to apply for Design

1 Certification. We had long pre-application review
2 period from 2010 to 2014. During the pre-
3 application period, KHNP submitted five topical
4 report which are quality assurance program, PLUS7
5 Fuel design, critical heat flux correlation,
6 fluidic device design, and the large break LOCA
7 methodology. In large break LOCA we applied the
8 best estimate.
9 Among these five topical report Staff
10 issued the Draft Safety Evaluation Report for
11 Quality Assurance Program, fluidic device, and
12 critical heat flux topical report. We have NRC
13 Staff issued three SER reports for these three
14 topical reports.
15 For the remaining topical report, KHNP
16 expects they will issue Draft SER once KHNP
17 addresses that concern. I believe those will be
18 also under your review.
19 In 2014, KHNP submitted design control
20 document and the 51 technical report. We believe we
21 have much complete information for APR1400 Design
22 Certification. KHNP provided additional 19
23 technical report (inaudible) which was done by
24 March 2015. Since then, KHNP has more than 2000
25 RAIs and several hundreds of action items which

1 came from conference meeting or conference call,
2 face-to-face meeting. KHNP believes most of them
3 are addressed except for some open items that was
4 described in our SER. KHNP believe these open
5 items will be also addressed in the near future.
6 This is the history and this picture was done at
7 the time of we submit our application.
8 Next, let me brief development history
9 of APR1400. APR1400 design was developed,
10 development that go back to 1992. We developed this
11 design almost 10 years. Our design is based on
12 combustion engineering design so at that time in
13 early 1990 we had the license agreement with -- at
14 that time we call it ABB-CE. So our design is based
15 on Palo Verde design in terms of NSSS design, and
16 from core design we have anode number two C design.
17 So based on this combustion engineering design we
18 standardized our nuclear power plant design. At
19 that time we call it Korean Standard Nuclear Power
20 Plant, but we change it. The plant name for
21 (inaudible) so we call it OPR 1000.
22 OPR 1000 has very much operating
23 experience. Hanbit 3 and 4, Hanbit 5 and 6, Hanul 3
24 and 4, Hanul 5 and 6. Those are the designed with
25 OPR design in operation, and also we have some

1 improved OPR 1000. That is just -- we call it
2 improved, means some kind of economy benefit. We
3 just reconfiguration some of the systems so we call
4 it improved OPR 1000, but we think that that is the
5 same (inaudible) of the OPR 1000. Shin-Kori 1 and 2
6 is that we call it improved OPR 1000.
7 For this operation of OPR 1000 we have
8 very much experience in our design, so based on
9 this experience, accumulated experience we
10 developed APR1400. So APR1400, also we call global
11 marketing, we just (inaudible) for the URD document
12 and System 8 Plus design, and for NRC project, we
13 apply the latest code and standard. That is the
14 basis of our APR1400 development.
15 Then next let me introduce our APR1400
16 (inaudible) or just our current status of our
17 APR1400 design. APR1400 design (inaudible) Shin-
18 Kori 3 employees are so -- Shin-Kori 3 is almost --
19 we put in the pure and we right now, as of today,
20 right now we do the hot function test so we are
21 almost done all the test, and we are waiting for
22 our party's approval for commercial operation. So
23 we think that APR1400 is a finished and complete
24 design.
25 In the commercial operation is

1 scheduled October 2016, as I mentioned earlier. And
2 also we have APR1400 contract with UAE in Barakah,
3 so in Barakah also design same as Shin-Kori 3 and
4 4, and it is same as APR1400. This Barakah project,
5 construction schedule is on schedule, so they will
6 be also into operation next year, so that may be
7 our current schedule. And Korea also, for Barakah
8 project we have -- KHNP have contract with ENEC
9 and we are going to support, all the operational
10 people, maintenance people will be provided for
11 operation of the Barakah project.
12 MEMBER REMPE: Excuse me. How many years
13 did it take to construct Barakah?
14 MR. Y. KIM: Barakah, we have around 15
15 months.
16 MEMBER REMPE: Fifteen months.
17 MR. Y. KIM: Yes.
18 MEMBER REMPE: Thank you.
19 MR. Y. KIM: The APR1400 design feature,
20 this slide is the same as the one we are going to
21 present in Chapter 5 presentation, so I just want
22 to just touch it very briefly, and then I will hold
23 it to more detailed explanation in Chapter 5
24 presentation.
25 Basically, our APR1400, the lifetime

1 you call it 60 years for major (inaudible). And we
2 -- APR1400 is a two-loop plant, two steam
3 generator, RCP, cold leg, and the one pressurizer.
4 And let me touch -- let me skip this slide.
5 So basic approach for APR1400 design
6 for NRC project, design certification project, you
7 are going to retain (inaudible) as much as possible
8 we can. So that is just to take the benefits of
9 proven safety and performance. Also for design
10 certification we have U.S. NRC guideline that is
11 effective on August of 2014. This is six months
12 before we are out of docketing date, so we just
13 apply all the regulation guide effective on August
14 2014.
15 Let me add some APR1400 design feature.
16 That is a slide from Shin-Kori 3 and 4. One is that
17 we -- the station blackout coping capability. With
18 (inaudible) that capability, we applied gas turbine
19 generator for alternate current source, and also we
20 increased the battery capacity. That will increase
21 our (inaudible) and also our (inaudible)
22 capability. Also, we applied FLEX implementation
23 such as standard pressure for water level
24 measurement, and spent fuel spray, and the water
25 hookup to supply cooling water from outside. Also,

1 we add hookup for the primary side and the
2 secondary side, so that kind of capability we kept
3 in APR1400. And also --
4 MEMBER SKILLMAN: What is the basis of
5 the 16-hour battery? What is the lode?
6 MR. Y. KIM: Sixteen hour battery, that
7 is based on -- plus in Shin-Kori 3 and 4 we have 8-
8 hour battery capacity, but in terms of we are going
9 to increase our (inaudible), and also we have some
10 kind of -- based on the NRC record 1.1.5, there is
11 some guidance for nuclear power plant SBO coping
12 time. So at that time, that is based on the
13 emergency alternate current power system
14 configuration, and also the reliability of
15 emergency diesel generator, and also the frequence
16 of loss of offsite power. That kind of basis on
17 these category, that is our design is classified as
18 P3 category, and the P3 category requires 16 hours.
19 MEMBER SKILLMAN: Thank you.
20 MEMBER STETKAR: We'll get into this
21 once we've reviewed Chapter 8, but in fact, on the
22 DCD they have four batteries. And I believe that
23 trains A and B in the certified design are 8-hour
24 batteries because they can be recharged from the
25 alternate AC generator. Trains C and D are 16-hour

batteries because they cannot be recharged from the alternate AC generator, at least not easily. Is that correct?

MR. Y. KIM: Right.

MEMBER SKILLMAN: Thank you.

CHAIRMAN BALLINGER: Are any of these enhancements, if you will, being fed into the UAE design, or is the UAE design strictly Shin-Kori Unit 3?

MR. Y. KIM: Well, this is based on -- we just -- our objective is to apply for NRC design certification, so --

CHAIRMAN BALLINGER: Thank you.

MR. Y. KIM: -- we can say that. Like the aircraft impact is -- that is it depends on each country.

The second one is that we improve the tolerance part of beyond the design basis such as aircraft impact, and also loss of large area, and physical security requirement, so we incorporate all the U.S. requirement in our APR1400 design.

Also, one of the big issue is the GSI-191, as you know, so we did GSI-191 test for large break LOCA, and the upstream and the downstream test is done, and NRC Staff audited our facility,

1 so I think we believe GSI-191, we successfully
2 completed.
3 Also, we have diverse protection system
4 for common cause failure, so usually plant
5 protection system is word for core protection, but
6 we also have diverse reactor protection system. And
7 for the seismic design, until Shin-Kori 3 and 4
8 design we applied the ASTM model. It's very crude,
9 but for APR1400 design we applied finite element of
10 this in our seismic design. This is, I think, a
11 major difference from our Korean design, and for
12 U.S. NRC APR1400 design.
13 And the next one is, let me explain
14 about what is the difference between APR1400 System
15 80+. In terms of containment respects, System 80+
16 is spherical steel design and APR1400 is
17 cylindrical pre-stressed concrete design. And in
18 terms of thermal power there's a slight difference.
19 System 80+ is 3931 and APR 1400 megawatts per
20 month. And we --- in hot leg temperature, we
21 already decreased our hot leg temperature. And
22 also, in terms of safety injection system we added
23 a fluidic device in our safety injection system. I
24 think we believe that with this fluidic device we
25 can enhance for small break LOCA capability, coping

capability. So just we will use (inaudible) the safety injection system.

And in terms of over-pressure protection system, System 80+ is equipped with pressure safety valve and two safety pressure system, but we incorporated this design feature into -- in one system. We call it POSRV, so POSRV does (inaudible) capability also depressurization system capability in our POSRV.

And in terms of reactor vessel overhead structure for our maintenance, maintenance convenience we applied integrator head assembly, so easily we can remove reactor vessel upper head system during the overhaul period. And also in terms in the severe accident we -- System 80+ is a cavity flooding system but we added power and in-vessel retention and reactor vessel cooling capability. For this design feature we can discuss in our separate chapter review time.

For general arrangement, this is -- our design certification is a single unit basis, and single unit base for reactor containment is surrounded by auxiliary building. In auxiliary building we have two EDG inside, two EDGs outside, and we have turbine building, and one compounded.

1 This is the general arrangement for APR1400. And
2 this shows the primary reactor coolant system. Most
3 of this design is the same as the System 80+ except
4 for the POSRV, as I explained earlier, that this
5 has combined capability of safety relief and
6 depressurization capability.
7 And our general equipment arrangement
8 in Aux building is we have four quadrant, so we
9 have some high function in one quadrant, but that
10 does not protect, and that doesn't impact that
11 safety injection pump is located for each quadrant,
12 and shutdown pump, and the containment spray pump
13 is located for each quadrant, and the component
14 cooling pump is located for each quadrant. So we
15 have this four quadrant design feature in our
16 APR1400.
17 Then next let me explain about our
18 APR1400 design certification review status. NRC is
19 planning to have complete this design review within
20 42 month schedule, so Phase 1, the target date was
21 established by NRC, and Phase 1 is completed
22 January this year. We believe they have
23 successfully completed Phase 1, and we are now at
24 the stage, final stage of Phase 2 stage, and the
25 schedule is November 2016. So that maybe depend on

each chapter progress, but we believe Chapter 2 and Chapter 5 is now reached its final stages so we are on the track. And Phase 3 and 4 is also, Chapter 2 and 5 is underway, Phase 3 is underway, and Phase 4 is underway, so NRC plan to complete Phase 4 review at end of 2017. So KHNP tried to support and meet this target schedule. We will work very hard to support this schedule.

So let me summarize for this APR1400 project. APR1400 adopt proven technology from operation of OPR 1000, and so APR1400 use safety code for System 80+. So in terms of technical issue we have based on -- we have accumulated experience and also we have certified design code. And in Korea, APR1400 standard design was approved by the Korean nuclear party in 2002, and as I mentioned earlier, Shin-Kori 3 will be commercial operation soon, and Barakah also soon, so I think that APR1400 is essentially very complete design. So that is the message I want to give you this morning. Thank you.

CHAIRMAN BALLINGER: Thank you. Questions from the Committee Members? We're already a little bit behind, so we need to spend the time that's required but be mindful, please, of the

time.

MEMBER REMPE: Mr. Subcommittee Chairman, I think --

CHAIRMAN BALLINGER: My schedule shows 8:40 to 9. Oh, pardon my dyslexia.

(Laughter)

MEMBER STETKAR: We'll take care of the clock and the microphones. You just run the meeting.

CHAIRMAN BALLINGER: Can you change my diapers?

(Laughter)

MR. SISK: I think we're through with the overview, if there's any questions. Otherwise, we can move into Chapter 2 very quickly, so we are mindful of time, as well. So let's switch out.

CHAIRMAN BALLINGER: Yes.

MR. SISK: Okay. Are we ready, Mr. Chairman?

CHAIRMAN BALLINGER: Yes.

MR. SISK: I am Rob Sisk, Westinghouse. I'm just going to briefly, quickly introduce Mr. Kwanghoon Koh. He will lead us through the Chapter 2 presentation. And with that, I'll turn it over to Mr. Koh.

1 MR. KOH: Let me start. Good morning,
2 ladies and gentlemen. My name is Kwanghoon Koh. I
3 working for KEPCO E&C. I'm a civil engineering
4 specialist. For today's presentation, civil
5 engineering and the structural part will be
6 presented by me, Kwang Koh, and the mechanical and
7 nuclear engineering part will be presented by Mr.
8 Dong-Su Lee. Now, I am going to present our work
9 results entitled APR1400 Chapter 2, Site
10 Characteristics. Next slide.
11 Presentation of Chapter 2, Site
12 Characteristics and the summary of this
13 presentation will be given. The documents for
14 APR1400 are as follows; APR1400 DCD design control
15 document, Tier 1 and Tier 2. After the meeting,
16 many RAIs, number respond 33, number of open items
17 is zero.
18 The scope of this Chapter 2 is as
19 follows. Chapter 2 provides the five requirements
20 for the APR1400 design, including geological,
21 seismological, hydrological, and meteorological
22 characteristics. The COLA is to come from -- to
23 provide the site specific qualification.
24 This slide is for site characteristics.
25 APR1400 is designed on the basis of a set of rules,

1 to include a range of potential nuclear power plant
2 sites in the United States. Table 20-1 is a summary
3 identifying the APR1400 design.
4 This slide is for (inaudible). Section
5 2.1 is geography and tomography, and Section 2.2 is
6 called industrial transportation and military
7 facilities. These two sections will provide the
8 (inaudible) descriptions here. List of criteria for
9 Chapter 2 is provided in the attachment.
10 Chapter 2.3 is for meteorology. Some
11 (inaudible) snow, winter precipitation (inaudible).
12 These are based on HMR, Hydro Meteorological Report
13 and the SEG 7.
14 There are three wind related
15 parameters, wind, tornado, and hurricane. These
16 parameters are based on ASCE 7, tornado parameters
17 are like these. These parameters are based on Reg.
18 Guide 1.276, and the hurricane parameters are like
19 this, and it is based on Reg. Guide 1.221.
20 These three parameters are found in
21 moth Continental weather. HVAC temperature and
22 beyond design temperature and.
23 CHAIRMAN BALLINGER: I'm reminded by
24 Chris that KHNP is presenting on Chapter 2.3, but
25 the Staff will not be presenting on Chapter 2.3, to

1 my knowledge.

2 MR. CIOCCO: That's correct, not today.

3 We will do that at the October 4th meeting.

4 CHAIRMAN BALLINGER: Right.

5 MR. CIOCCO: Our Senior Meteorologist

6 wasn't available, but you have the Safety

7 Evaluation which has all of our 2.3.

8 CHAIRMAN BALLINGER: Yes.

9 MR. CIOCCO: Thank you.

10 CHAIRMAN BALLINGER: Thank you.

11 MR. D. LEE: Thank you, sir. My name is

12 Dong-Su Lee, who is the second presenter.

13 As you can see in this slide, the HVAC

14 design temperatures here. The HVAC systems are

15 designed applying outdoor air temperature specified

16 in the FURD. The outdoor air temperatures are

17 categorized into three conditions as is shown in

18 this slide; 5 percent exceedance value, 1 percent

19 exceedance value, and zero percent. The 5 percent

20 annual exceedance values are used to design

21 (inaudible) design, and 1 percent is non-safety

22 related design, and the zero percent are used on

23 safety-related design. Let's move onto next page.

24 In this page, we had correction on this

25 slide due to some typos from the version we provide

1 previously. In beyond design temperatures for power
2 are categorized into two parts. First part is 5
3 percent exceedance value for the circulating water
4 system. Second one is zero percent exceedance value
5 for essential service water system. Let's move on
6 to the next page.
7 MEMBER STETKAR: Can we stop right
8 there?
9 MR. D. LEE: Yes.
10 MEMBER STETKAR: The 81 degrees
11 Fahrenheit, zero percent exceedance non-coincident
12 wet bulb temperature for the essential service
13 water system is very low for the United States.
14 MR. D. LEE: We know that.
15 MEMBER STETKAR: Okay. That's -- and
16 I'll ask the Staff during our next meeting why they
17 accept that. But if I look at several other designs
18 that have been certified in the United States, that
19 temperature tends to be in the 86 to 88 or 89
20 degree range. I have an anecdote from the Staff SER
21 on another certified design that said 21 percent of
22 the weather stations in the United States had a
23 zero percent exceedance non-coincident wet bulb
24 temperature that exceeded 86 degrees Fahrenheit,
25 which is 5 degrees higher than your's. So from the

1 perspective of your design, what in your design
2 limits that temperature to being so low? What
3 specific elements of your design? Is it your design
4 specifications for your essential service water
5 cooling towers? Is it temperature limits on your
6 component cooling water system? Is it chilled water
7 systems for HVAC? What elements of your design
8 limit that temperature?
9 MR. D. LEE: Okay, thank you. Let me
10 first introduce that the key review items --
11 MEMBER STETKAR: That's -- I'm asking
12 you -- I've read the RAIs. I'm asking you what
13 elements of your design limit that temperature? I
14 know that your RAI response says that it was
15 accepted for the ABWR. The ABWR combined license
16 for the South Texas plant, they had to increase it
17 to 88.3 degrees Fahrenheit for that site. That is
18 an extreme site, I will admit it, but I'm asking
19 you what elements of your plant design, not
20 politics, what elements of your plant design limit
21 that temperature to 81 degrees Fahrenheit? Why can
22 it not be something like 87 or 88 degrees
23 Fahrenheit? And if you can't answer that, that's
24 fine. We can take the answers at a later meeting,
25 especially because we're covering Chapter 2.3 in

1 another Subcommittee meeting.

2 MR. D. LEE: Thank you.

3 MEMBER STETKAR: But I'd like to know

4 that clearly in terms of where your thermal-

5 hydraulics limit that temperature.

6 MR. SISK: So let me kind of answer that

7 a little, give you as precise answer, we can get

8 back --

9 MEMBER STETKAR: Rob, turn your

10 microphone on.

11 MR. SISK: This is Rob Sisk,

12 Westinghouse. Thank you, John.

13 We need to go back and get you a --

14 look at that question specifically.

15 MEMBER STETKAR: Yes.

16 MR. SISK: As we noted, you'll be

17 talking to 2.3 at a later time. If we don't have an

18 answer later today, we'll get back to you by that

19 time.

20 MEMBER STETKAR: I thought you were

21 going to have to do that. I just wanted to get it

22 on the record so you knew next time we need a list

23 to come back with.

24 MR. SISK: We have it noted, and thank

25 you.

1 MEMBER STETKAR: Thank you.

2 MR. BROWN: Maitri and I will track that

3 as an action item.

4 MR. D. LEE: Let me start. The

5 atmospheric dispersion factors were determined for

6 the dose recovery during normal operation, and for

7 the radiological consequence analysis for

8 (inaudible) conditions. And on-site atmospheric

9 dispersion factors are used for the MCR/TSC

10 habitability analysis. The regulatory basis are as

11 follows.

12 In DCD 202, Table 20-1, Bounding

13 Atmospheric Dispersion Factors and Dispersion

14 Factors are presented. Once the on-site atmospheric

15 dispersion factors for MCR/TSC habitability

16 analysis are present in DCD Table 23-2 through 23-

17 12, and the input variables including post

18 (inaudible) and intake locations used for the on-

19 site (inaudible) are shown in the Table 23-13 and

20 Figure 23-1. Let's move on to the next page.

21 In the next page this slide shows the

22 design features for the atmospheric dispersion

23 factors. The long-term factors (inaudible) were

24 selected to bound the most (inaudible) site, and

25 the short-term atmospheric dispersion factor at EAB

1 was obtained from EPRI-URD. For the on-site
2 atmospheric dispersion factors have been calculated
3 based on the selected materials (inaudible) to
4 limit among six U.S. sites. And the two enveloped
5 most on-site (inaudible) U.S. sites, the sufficient
6 margin was applied. Lastly, ARCON96 code was used.
7 MEMBER SKILLMAN: Let me ask this
8 question, please. As I understand it, the site that
9 you chose is Prairie Island. Is that the most
10 limiting meteorological site?
11 MR. D. LEE: I will give you answer for
12 you. To address the essence of the single sites
13 providing limiting (inaudible) values for the
14 APR1400 (inaudible) geometrics. The onsite public
15 values are analyzed using 5-year Prairie Island
16 (inaudible) data as you mentioned, and the
17 resulting KAERI q values are increased by 50
18 percent such that more onsite KAERI q values become
19 bounding for the U.S. site meteorological data.
20 MEMBER SKILLMAN: Thank you.
21 MR. D. LEE: On the next page, this
22 slide shows the (inaudible) set perimeter values
23 for APR1400 compared to the corresponding site
24 characteristics, and at the other design site
25 perimeter values. It is shown in this table

1 atmospheric dispersion factor and (inaudible)
2 factor taken into account for the APR1400 could
3 bound other sites in U.S. Therefore, these sites
4 perimeters values are reasonable for use in off-
5 site dose assessment.
6 MEMBER REMPE: Before you leave this
7 topic, I would normally ask this question of the
8 Staff if they were going to discuss Section 2.3
9 today, but they're not here to discuss that today,
10 so I'm going to try and phrase it as a question to
11 you, and I'm hoping the Staff will speak up and
12 clarify. But in their Draft SER on page 245 they
13 said, sometimes Chapter 2 references the site
14 boundary when they mean the EAB. Are you aware of
15 the Staff's comment in their Draft SER on page 245?
16 And do you know why the Staff provided that comment
17 in the Draft SER on that page, because I'm
18 wondering if this comment means that they had a
19 concern with Section 2.3, because they kind of
20 imply that the way that Section 2 was written, that
21 there might be an error. And I just want to know
22 what was going on. And so could somebody clarify
23 that statement and what it means, and did they
24 discuss that with you?
25 MR. CIOCCO: I don't think we have our

meteorologist here.

MEMBER REMPE: Well, again, are you aware of that statement in the Staff's --

MR. CIOCCO: Excuse me. We do have somebody here.

MEMBER REMPE: Okay, good.

MR. MAZAIKA: This is Mike Mazaika from the Hydrology-Meteorology Branch.

There's sometimes a terminology issue that we were questioning where the site boundary and the EAB are co-located, and in some cases that they are separate, and they're used for two different analyses. The site boundary is often used for the long-term KAERI (inaudible) impact analyses, the EAB is used for design-basis accidents.

MEMBER REMPE: Was this discussed with KHNP, and was it clarified so that you feel comfortable that things are correct now?

MR. MAZAIKA: I would have to go back and look at the RAI response. I don't have that answer right now.

MEMBER REMPE: Okay. Yes, we'd like to -- I would -- the sentence didn't reference an RAI, and so I just would like some clarification of that

sentence, and to understand that things are okay now.

MR. MAZAIKA: Okay. We'll look at that.

MEMBER REMPE: Thank you.

CHAIRMAN BALLINGER: It's on the Action Item list.

MR. KOH: Section 2.4 describes hydraulic engineering. Groundwater and flood elevation (inaudible). Groundwater elevation is two feet below plant grade, maximum level for flood is one feet below plant grade. These parameters are based on EPRI, URD, ARWR, maximum rainfall precipitation rate (inaudible) hourly, 90 for each hour, and the short term 3.2 inches in (inaudible). These parameters are based on hydro meteorological report and the EPRI value.

MEMBER STETKAR: Mr. Koh, before we leave that slide, in Table 2.0-1, it's -- I'm confused about the words that are used throughout the DCD. So, for example, in Table 2.0-1, it actually says maximum elevation of groundwater 0.61 meters, 2 feet below plant grade in the vicinity of the SSCs important to safety. In other places I read, safety-related elevations, and you have in Chapter 19 and Chapter 17 a list of SSCs that are

1 risk-significant. So what are the buildings that
2 have SSCs important to safety? Are they only
3 safety-related? Are they risk-significant SSCs?
4 What are those buildings, because it's really
5 important for me to understand that?
6 MR. KOH: The building -- the SSC
7 important to safety building partially it is we
8 think that the(inaudible) and the related --
9 safety-related buildings, and also some buildings
10 under -- around the -- the buildings around the
11 safety-related building potentially also are
12 including.
13 MEMBER STETKAR: I didn't quite fully
14 understand that, because you said safety-related
15 buildings and other buildings around there. I'm
16 really interested to understand if I'm going to
17 build this plant what buildings do I need to assure
18 that the groundwater is more than two feet below
19 grade and the flood is more than one foot below
20 grade?
21 For example, turbine generator
22 building, is that yes or no? A simple question, yes
23 or no? I will tell you that the turbine generator
24 building does contain SSCs that are risk-
25 significant according to Chapter 19 and Chapter 17,

1 which you're well aware of, as do many other
2 structures. You can answer at a later date, but I
3 want to be very, very clear on this so that there's
4 no question.
5 MR. KOH: Okay.
6 MEMBER STETKAR: Don't change the -- oh,
7 unless you have an answer.
8 MR. KOH: I will provide the information
9 later.
10 MEMBER STETKAR: Okay. Then on the topic
11 of -- because this is all hydrology. In Section
12 2.4.4.2 you make a statement that says site-
13 specific information related to the effect of dam
14 failures on the site includes how the analytical
15 methods that are presented are applicable to
16 artificially large floods with appropriately
17 acceptable coefficients and flood waves through
18 reservoirs downstream of failures. What do you mean
19 by artificially large floods?
20 MR. SISK: You're talking now about
21 temporary flooding of the site?
22 MEMBER STETKAR: It's on the record.
23 MR. SISK: Thank you.
24 MEMBER STETKAR: The -- in Section
25 2.4.11 where you discuss low water considerations,

1 you specifically mention "site-specific information
2 related to low water considerations includes low
3 flow in rivers and streams, low water resulting
4 from surges, seiches, or tsunamis, historical low
5 water, future controls, plant requirements, and
6 heat seek dependability requirements." You don't
7 mention explicitly the fact that as a COL
8 applicant, I should also evaluate failures of
9 downstream or other impoundments for my essential
10 cooling water supply, or my ultimate heat sink, if
11 I so desire, decide to construct my plant that way,
12 because part of the ultimate heat sink is my
13 responsibility as a COL applicant. So I was curious
14 why you didn't provide any notion of evaluating
15 failures of water impoundments or downstream dams
16 if I'm on a river, but it could be an impoundment
17 of a cooling water reservoir, for example. We have
18 reviewed one site in the United States that has a
19 very, very large cooling water reservoir with an
20 earthen dyke around it. You might call it a dam,
21 it's a dyke, whatever. And failures of that
22 structure can cause problems for them. So I'll put
23 that on the record just to see what your response
24 would be.
25 And in Section 2.4.12 regarding

1 groundwater, the discussion in that section relates
2 to hydrostatic loading on structures, and I
3 understand that. But I couldn't find anything in
4 the DCD, at least quickly, that relates to
5 groundwater chemistry. In other words, do you have
6 limits on the chemistry of the groundwater in terms
7 of aggressiveness, chlorides, for example, because
8 those may compromise below-grade structures. And,
9 obviously, since the groundwater can be only two
10 feet below grade, a substantial portion of the
11 subsurface structures could be exposed to the
12 groundwater. So I was curious, if you do specify
13 some sort of chemistry when it's for the
14 groundwater where are they specified in the DCD?
15 MR. KOH: I think that you groundwater
16 chemical problem related to problems ---
17 (inaudible) different from site to site, so --
18 MEMBER STETKAR: That's absolutely --
19 MR. KOH: --- (inaudible).
20 MEMBER STETKAR: Absolutely true but if,
21 for example, depending on your specifications for
22 the type of concrete that you're going to use in
23 your buildings it may be more or less susceptible
24 to groundwater chemistry. So as a COL applicant, if
25 there are specific limits on the groundwater

chemistry that I need to be aware of, I would think that they should be specified in the DCD. If there's no limits, you know, I could probably put it in an acid bath. So where do you specify those limits?

MR. SISK: We have it --

MEMBER STETKAR: If you do have limits, they should be specified such that the COL applicant must confirm that their groundwater chemistry, you know, is better than those limits. If there are no limits, that's fine, but it's rare that that's actually the case.

MR. SISK: Thank you for the question. This is Rob Sisk, Westinghouse. Thank you for the question. We will -- we have noted the question down. I will need to evaluate it and get back.

MEMBER STETKAR: Thank you.

(Off record comments)

MR. KOH: Can I start again? Okay. Section 2.5 describes geology, seismology, and geotechnical engineering. SSE CSDRS and the HCRHRFSO are used for seismic design of structural and for (inaudible). SSE is based on 0.3g peak ground (inaudible), and the SSE based on also CSDRS of 45 (inaudible) spectra. The(inaudible) backdrop

1 for SSE are (inaudible) HCRHRFSO is hard rock high
2 frequency response spectra, and the peak ground
3 (inaudible) is 2.2 (inaudible).
4 This figure shows you margin to CSDRS.
5 Features for the CSDRS as follows. The margin to
6 CSDRS are developed from the Reg. Guide 1.50
7 shifted the(inaudible) spectra, basically, and the
8 (inaudible) value is 0.3g. Below 9 hertz,
9 (inaudible) Reg. Guide 1.50 spectra, and at the
10 frequence of 25 hertz the spectra values of Reg.
11 Guide Spectra are increased by 30 percent, and for
12 considering high frequence motion at (inaudible)
13 site is standard from 33 hertz to 50 hertz. DCCSDRS
14 will be discussed in detail in Chapter 3.
15 CHAIRMAN BALLINGER: With respect to
16 this Figure 2.0.1 and 2, by the way, in the DCD
17 nothing is labeled. This figure is clearer but --
18 and I guess we can guess what damping 2, 3, 4, 5,
19 7, and 10 percent are, but in the DCD there's no
20 labels at all that tells you anything. So you
21 probably ought to think about fixing that.
22 MR. KOH: I see. We will.
23 MR. Y. KIM: Yes, we will incorporate
24 logistics in our DCD.
25 CHAIRMAN BALLINGER: Not only that, but

in terms of --

MR. KOH: You mean label the damping --

CHAIRMAN BALLINGER: All blue lines, we know -- we can guess what the damping factors --

MR. KOH: Yes, okay.

CHAIRMAN BALLINGER: Yes.

MR. KOH: Okay.

CHAIRMAN BALLINGER: Thank you.

MR. KOH: Damping labels will be added to here.

CHAIRMAN BALLINGER: Okay, thank you.

MR. KOH: This figure shows data for CSDRS. (inaudible) value is 0.3g. This figure shows you high response spectra, HRHFO high response spectra. Even though the CSDRS amounts to high frequency application in the high frequency range between 9 and 50 hertz, those CSDRS are not anticipated to cover ground motion response spectra for all potential Central Eastern United States sites. Therefore, this HRHFOSO is used for covering high frequence ranging. The PGOHRF response spectra is 0.2 (inaudible), and this response spectra will be discussed in detail in Chapter 3.

This figure shows you what HRHF response spectra. (inaudible) deformation is a core

1 item. The core applicant recheck the deformation
2 potentials and come from the (inaudible) within the
3 design basis of the facility. For uniformity of
4 soil, (inaudible) angle is limited to 20 degrees.
5 (inaudible) static bearing capacity is 50,000 PSF
6 minimal allowable, dynamic bearing capacity for
7 normal conditions, dynamic bearing capacity is
8 50,000 PSF (inaudible) of soil is 1,000 feet per
9 second, and the liquefaction potential is none for
10 (inaudible). Minimum soil angle of internal
11 friction is 35 degrees below the seismic
12 (inaudible) structure. Allowable settlement of
13 structures are as follows. Maximum allowable
14 different set point inside the building is in
15 principle 50 feet in any direction for the seismic
16 (inaudible) structures. Minimal allowable different
17 settlement between buildings which is three inch
18 between (inaudible) basement and the EDG building,
19 and half inch between other buildings.
20 MEMBER STETKAR: Let it be on the record
21 that I have permanent nerve damage in the tips of
22 my fingers, and sometimes my tactile sense is not
23 necessarily what it should be. It is now on the
24 record.
25 A couple of questions on this. First of

1 all, I -- what particular buildings are in the
2 scope of the certified design? You mentioned the
3 nuclear island, you mentioned the emergency diesel
4 generator building, and the diesel fuel oil tank
5 building. If I look at the figure, and I have to be
6 careful because this figure is marked security-
7 related, so I have to be a bit careful when I refer
8 to it. Figure 1.2-1 in the DCD shows a plan of the
9 site, and it has marked several buildings with
10 shading that says, scope of design certification.
11 And all of the buildings that are listed here are
12 in the scope, as is the turbine generator building,
13 and the compound building. But in particular, also
14 shown in the scope are the essential service water
15 component cooling water heat exchanger buildings on
16 that figure. Are they in the scope of the design
17 certification, or not? They are certainly safety-
18 related buildings, but are they in the scope of the
19 design certification, or not? It's a yes or no
20 answer. Somebody here should know that. We have a
21 lot of people.
22 MR. KOH: Mr. Oh, please.
23 MR. OH: This is Andy Oh from KHNP. And
24 as you asked for the scope of the building as in
25 scope for the APR1400 design certification is ESW

1 and CCW heat exchanger building is in scope.
2 MEMBER STETKAR: In scope. Okay.
3 MR. ROCHE-RIVERA: If I could -- good
4 morning. My name is Robert Roche-Rivera. I'm a
5 structural engineer, Office of New Reactors with
6 the EIA. We actually asked the same question you
7 have, and this will be covered during our Chapter 3
8 meetings. The response, the clarification we got
9 from the applicant is that those buildings that you
10 have indicated are -- with regards to the seismic
11 analysis and structural design aspects they are not
12 part of the scope of the certified design. They are
13 not.
14 MEMBER STETKAR: Thank you.
15 MR. ROCHE-RIVERA: And in addition to
16 that, actually, the DCD does include COL items that
17 address that aspect and are left to the COL
18 applicant.
19 MEMBER STETKAR: Thank you. So I'm now
20 left with answers on the record that leave me
21 equally confused as before I answered the question.
22 So they're either in the scope or not in the scope.
23 If they are in the scope, it strikes me that the
24 specifications for foundation and subsurface
25 materials should apply to them. If they are not in

1 the scope, it strikes me that it should be very
2 clear that the COL applicant must be responsible
3 for them. And I will add not only those buildings,
4 but also the essential service water cooling tower
5 structures because they are certainly safety-
6 related, and I will add the component cooling water
7 supply and return piping tunnels that go from the
8 auxiliary building where the component cooling
9 water pumps are out to the heat exchanger buildings
10 because those are also certainly safety-related
11 structures. They happen to be underground piping
12 ducts but they're safety-related. So I think that
13 the DCD and the Staff's review of the DCD in all
14 areas, not just seismic, but also any
15 specifications for subsurface materials should be
16 consistent about what is inside the scope, and what
17 is not inside the scope of what's being proposed
18 here.
19 MR. SISK: So this is Rob Sisk,
20 Westinghouse. And to answer that question, clearly
21 there needs to be some reconciliation of what
22 Robert had to say and Dr. Oh. What we will do is
23 cover this in more detail during the Chapter 3
24 review. This will be specifically covered in
25 detail, particularly on the seismology, Section

1 37.38, and we will have that clarity made at that
2 time.
3 MEMBER STETKAR: But, Rob, it also,
4 obviously, has -- you know, depending on the
5 answers there it has trickle down or tentacles that
6 reach into Chapter 2 here, also, and perhaps COL
7 information items related to Chapter 2. That's --
8 if they're out of scope, I'm more concerned about
9 making sure that the COL information items in
10 Chapter 2 make it very clear that the COL applicant
11 must meet some specific criteria for the
12 foundations and subsurface materials for those
13 safety-related buildings, because they are safety-
14 related.
15 MR. SISK: I understand, and we will --
16 as Robert indicated, as well, there are some COL
17 information items we will need to look to see if
18 they're fully addressed, all of the concerns you've
19 raised today.
20 MEMBER STETKAR: Okay. As I said, not
21 just Chapter 3, Chapter 2.
22 The second question that I had relates
23 to your Item 7B here that says, the maximum
24 allowable differential settlement between buildings
25 is 3-inches between the nuclear island base mat and

the emergency diesel generator building, and the diesel fuel oil tank building. Three inches doesn't sound like a lot until I start to think about piping, and cable, and vent -- I don't know if there are any ventilation penetrations, but there's certainly piping and cable penetrations that go between those buildings. How do you justify 3-inches differential settlement between those buildings?

MR. KOH: We check all the settlement of buildings, NI buildings, and other buildings. As you know, building, NI building and EDG building, in between buildings is the only electrical lines there, so that shows that 3-inch is almost --

MEMBER STETKAR: Okay. Are there only electrical lines, or are there cooling water lines for the DC generators?

MR. KOH: It is, between NI building and the EDG building, there is only electrical lines, but between and NI buildings, and other buildings, there are major steam lines and other piping. So the between NI building to EDG building amount of settlement is although with different amount to each, quite large, 3-inches, but within NI building, other buildings here, amount of

settlement is only half inch because considering the piping, venting, piping --

MEMBER STETKAR: I'm sorry. That says inside the building. That's something like --

MR. KOH: No, no, no. Here, please, here.

MEMBER STETKAR: Oh, between other adjacent buildings.

MR. KOH: Therefore, half inch between other buildings.

MEMBER STETKAR: Okay.

MR. KOH: And NI and the other buildings, (inaudible) EDG and the other buildings.

MEMBER STETKAR: So the 3-inch only applies to the EDG building.

MR. KOH: Yes.

MEMBER STETKAR: And that's because the only connections are electrical cables.

MR. KOH: Yes.

MEMBER STETKAR: Okay, thank you. That helps.

MR. KOH: Thank you.

MEMBER POWERS: And, John, we've routinely approved 3-inches. This is not an uncommon number.

1 MEMBER STETKAR: It's actually an
2 uncommon number. Most of the ones we've seen is
3 half an inch.
4 MEMBER POWERS: No, just last month we
5 wrote off on 3-inches.
6 MEMBER STETKAR: Okay.
7 MR. KOH: Backfill (inaudible)
8 properties are as follows. Density, (inaudible)
9 ratio, and (inaudible) small strain less than 0.001
10 percent(inaudible) poll also shows (inaudible), and
11 the damping of soil (inaudible). This figure shows
12 you (inaudible) and damping values for the
13 (inaudible) according to the shear strain
14 variations as presented in the previous table. This
15 figure is based on locally, (inaudible) Research
16 Center report. (inaudible) research.
17 NRC requested many RAIs for checking
18 APR1400 DC Chapter 2 to represent the table RAI
19 (inaudible). This table also shows the RAIs
20 (inaudible). This table also shows the reference
21 (inaudible). All RAIs were addressed during the NRC
22 Staff review and the open items were identified.
23 (Inaudible.)
24 CHAIRMAN BALLINGER: I'm not sure
25 whether this is the right point to ask this

1 question, but we're going in sort of order. On the
2 DCD, Chapter 2.1 -- Section 2.1.1, talks about the
3 exclusion area, and it talks about authority and
4 control. And there's a statement in there that's, a
5 highway, railroad, or waterway may traverse the
6 exclusion area but not close enough to the facility
7 to interfere with normal operations. What does not
8 close enough mean? I don't know how to interpret
9 that. I mean, a railroad track can be closer than a
10 highway?
11 MR. SISK: This is Rob Sisk,
12 Westinghouse, again. Thank you for the question.
13 I'll need to talk with the team to give you a
14 clearer answer.
15 CHAIRMAN BALLINGER: Thank you.
16 MR. D. LEE: This slide show the key
17 review items for RAI Number 8012 division number
18 231-3. As he discussed earlier, NRC Staff note that
19 almost all COL and ESP applicants previously
20 reviewed identified zero percent incidence
21 temperature greater than the corresponding site
22 parameters for APR1400. For these RAI issues, KHNP
23 pointed out with the temperature used by previous
24 certified reactor which used 81 Fahrenheit degree,
25 identified that those exceedance parameters are

same as those specified in EPRI-URD, thereby concluding that APR1400 repair temperature is reasonable and value for use. The answer for your questions will be provided for you.

MEMBER STETKAR: Thank you. And what I'd like -- I don't know whether the Staff is not going to discuss Section 2.3 today, and this is part of 2.3, but I'd like if the Staff has, or if you do, information about what fraction of the United States would not meet this criterion. We know that 21 percent will not meet 86 percent, 86 degrees. What fraction will not meet 81 degrees? And I'm not talking about land area, necessarily, because Alaska is awfully big.

MR. D. LEE: In this city, this phase is not designed yet, but the cooling tower temperature and with the others --

MEMBER STETKAR: Well, that's why I was asking about the design because that 81 degrees must be limited by some feature of the plant design. And I'd like to understand, you know, what feature of the plant design limits it to that. In other words, why cannot you -- why can you not specify a higher temperature, something like 86 to 88 degrees, which would allow you a much larger

1 area in Central, and Southern, and perhaps East
2 Coast U.S.
3 MR. SISK: This is Rob Sisk,
4 Westinghouse. Again, we'll need to --
5 MEMBER STETKAR: Yes.
6 MR. SISK: -- confer, as we talked about
7 earlier, John. But I will say that, don't
8 necessarily presume that that's a design limit as
9 much as a calculation limit that was done at the
10 time based on the URDs and based on the analysis of
11 record.
12 MEMBER STETKAR: Yes, I understand that,
13 but if I look at -- that one was in the ABWR
14 certified design, and we haven't built any ABWRs
15 except South Texas, which is kind of the ABWR
16 modified a bit. But at South Texas they had to
17 increase that temperature, in particular, to 88
18 point some odd degrees.
19 I think that in your slide here you
20 also say it was U.S. EPR proposed a temperature of,
21 I have that in my records here, actually 80 degrees
22 as a 1 percent exceedance value. I could not find a
23 zero percent exceedance value in the EPR DCD. It's
24 a 1 percent exceedance value of 80 degrees, so the
25 zero percent exceedance value would be somewhat

1 higher than that. How much higher, I don't know.
2 And I'll remind everyone that the NRC has not yet
3 certified the US EPR, so that temperature is
4 somewhat -- could be subject to change if it's ever
5 certified. The next lowest temperature I could
6 find, in fact, was 86.1 -- or 86 degrees for the US
7 APWR, and that was the one where the Staff cited 21
8 percent of the stations could not meet that. And
9 then AP1000 is 86.1, the ESBWR is 88, so you could
10 get the notion. From KHNP, in particular, I'm
11 interested in understanding what features of the
12 design limit that temperature. From the Staff, I'll
13 be more interested in terms of what fraction of the
14 United States could the plant be built given this
15 limit.
16 MR. D. LEE: Next, I can make the number
17 --- RAI number 7912, and the question number 234-1.
18 Through this RAI, NRC Staff raised the issue as
19 follows. Since both, the 3 and 4 -- the 3 and 4 and
20 in the same wind friction window from the thirty
21 point seven. As you could see, 3 and 4 is located
22 within this same window friction. At the time the
23 Reg. Guide 1.194, the criteria is not met, so
24 cannot be used the reduction factor of 2.
25 Therefore, KHNP found the fares which have same

application with the example in this RAI and update all of the analysis without credit of the reduction factor of 2.

Let me introduce summary. Chapter 2 defines site parameters of APR1400 standard plants and also identified all important site parameters. The COLA is to come from the DCD site parameters envelop site specific parameters. Table 20-1 identifies the site parameters for the APR1400 design. Thank you for your attention.

CHAIRMAN BALLINGER: Questions from Members? Thank you. I think we are now, if I even account for my dyslexia, we're actually ahead of schedule. We're scheduled for a break at 10:30. I would propose that we break from now until 20 minutes after and then pick up. Is that agreeable for everybody? Okay, let's take a break for 15 minutes.

(Whereupon, the above-entitled matter went off the record at 10:04 a.m. and resumed at 10:19 a.m.)

CHAIRMAN BALLINGER: And I believe KHNP wants to clarify one question.

MR. OH: Yes. Mr. Speaker, I'd like to clarify --

1 CHAIRMAN BALLINGER: Can you identify
2 yourself please?
3 MR. OH: Yes. Andy Oh, KHNP Washington
4 office. I would like to clarify my answer again
5 for the scope of ESW and CCW. Actually, the ESW
6 and CCW systems is in scope for the APR 1400
7 design.
8 However, the building regarding the
9 first seismic analysis and instructional analysis
10 is out of scope.
11 MEMBER STETKAR: Is out of scope.
12 Thank you. That clarifies that and I'll keep it on
13 the record then that I want to be sure -- I would
14 like to have assurance that indeed in Chapter 2,
15 which is what we are discussing today, there is --
16 it's adequately clear such that the combined
17 licensed applicant understands what limitations
18 they must meet in terms of sub-surface soil
19 structure, foundation design and things like that
20 for those structures -- the cooling tower
21 structure, if they are to use a cooling tower, and
22 for the piping tunnels that connect the complement
23 cooling water system and the service water piping
24 to those buildings.
25 MR. OH: However, steel systems design

is in scope.

MEMBER STETKAR: The system -- I understand the system in terms of flow rates and piping sizes and things like that. But I am talking about structures here.

MR. SISK: This is Rob Sisk Westinghouse, John. John, just to communicate clearly so we capture the idea correctly for Chapter 2, you're referring to the tunnels in the building. You just want to note that they are -- need to be addressed?

MEMBER STETKAR: I want to make sure that the COL applicant understands what they need to meet in terms of settlement requirements, differential settlement requirements, subsurface soil requirements for those structures because they are indeed all safe -- those -- the tunnels -- the CCW heat exchanger and ESW pump building buildings and the cooling tower buildings, if they are going to -- if they are going to use cooling towers.

MR. SISK: Okay. Let's continue. Turn on the microphone. Either that or speak more loudly.

MR. ROY: My name is Tarun Roy. I am the NRO project manager responsible for

1 coordinating staff review of APR 1400 Chapter 2 of
2 the design certification application. The NRC
3 technical staff involved with the safety review of
4 the APR 1400 FSAR Chapter 2 RS are as follows. We
5 have Seshagiri Tammara, then Mike Lee on the end,
6 and Ricardo Rodriguez. We will not be presenting
7 2.3 today. It will be on October 4th of 2016.
8 During this briefing, the staff will
9 present the Chapter 2 site characteristics with
10 open items although there are no open items. The
11 staff issued the 33 questions to the applicant,
12 requesting additional information. All questions
13 are either confirmative action or closed.
14 However, the last -- late last week in
15 Chapter 3 a draft -- Chapter 3 a draft RAI response
16 was issued from the applicant, RAI Number 8299,
17 question 3.7.2.9. The resolution of this response
18 may affect the DCD section 2.5.4.5 and COL item
19 2.5.8. RAI response will be discussed during the
20 presentation of section 2.5. Ricardo will do that.
21 With that, now I turn the presentation
22 over to the technical reviewer, Rao Tammara, for
23 the Section 2.1 and 2.2 of the radiation protection
24 accidental consequence branch.
25 MR. TAMMARA: My name is Tammara Rao.

1 MALE SPEAKER: Is the button pushed?

2 MR. TAMMARA: I am with NRO. My
3 responsibility is to review the FSR Sections 2.1
4 and 2.2. 2.1 entails the geography and demography.
5 It's the subsections covering the site, location
6 and description, exclusion area authority and
7 control and operation distribution.

8 These -- this information mainly
9 pertains to site specific and not design specific,
10 therefore the information is to be addressed by the
11 COL applicant who references this design.

12 Therefore, COL applicant will address
13 this information as a part of COL information 2.1
14 in the COL application.

15 Next slide, please. Section 2.2 deals
16 with the nearby industrial transportation and the
17 military facilities. This review also has three
18 subsections which covers the locations and the
19 routes nearby the site and the description of all
20 the facilities or with the processes, follow-ups
21 and the operations and the actions and the other
22 section where they devaluate the potential impacts
23 of those facilities on the safe operational plant
24 whether there are any potential impacts. These are
25 also, again, site specific. They are not design

1 specific. There are no site parameters or
2 characteristics defined in 2.0 table by the design.
3 Therefore, COL applicant to -- who addresses ---
4 who references this design is to be providing this
5 information as a part of COL item 2.2-1 and also
6 2.2-2 and staff will -- finds this acceptable
7 because it is site-specific information.
8 MEMBER STETKAR: I have a standard
9 question that I ask of every new plant so I have to
10 ask it on this one to get it on the record.
11 In the SER you note that the following
12 principal types of hazards will be considered with
13 respect to each of the above areas of review. We
14 are talking about these nearby hazards.
15 If they have a probability of occurrence
16 greater than 1 times 10 to the minus seven per year
17 and in the DCD the applicant uses that 10 to the
18 minus seven value and said well, if we can't do a
19 very detailed analysis we will use a ten to the
20 minus six screening value. Revision 2 of regulatory
21 guide 1.200 notes that it is recognized for those
22 new reactive designs with substantially lower risk
23 profiles, EG internal events, CDF below ten to the
24 minus six per year, that the quantitative screening
25 value should be adjusted according to the

1 corresponding baseline risk value.

2 So I'll ask you in that context why

3 does the staff accept a ten to the minus seven

4 absolute screening value for the APR 1400 design or

5 if a -- an approximate analysis is used -- the ten

6 to the minus six screening value?

7 MR. TAMMARA: In the evaluation

8 generally we screen -- I mean, the SRP guidance is

9 also the design basis accident is defined as the --

10 those events which have the probability of greater

11 than ten to the four minus seven having a dose

12 greater in excess of 10 CFR 100. That is the --

13 that is the definition of the design basis

14 accident.

15 So whenever we are looking at the

16 evaluation of the facilities, which have the

17 potential to impact the plant, we are screening out

18 on that basis first.

19 But however, if you have a detailed or

20 more statistical data available, the subset of that

21 definition says you can go as low or as high as ten

22 to the four minus six on this screening. So that

23 is the rare -- the design basis accident is defined

24 so that is the criterion that is being used.

25 Therefore, when they are saying that

they will meet ten to the four minus seven, we are accepting that one. But however in the COL phase we are evaluating whether they are meeting that ten to the four minus seven. If they are not, if they are meeting the ten to the four minus six, if they are not then we have to delay the NPRA or some other mitigating measures or something else. So that -- those are the steps which are being evaluated in the review.

MEMBER STETKAR: And that's -- and I understand that and I understand why you're constrained by what's written in the SRP.

We have seen plants and we have not yet reviewed Chapter 19 of the APR1400 design certification so I have no idea what their core damage frequency is or what the basis for that is.

Recognizing that in many cases they cannot evaluate external hazards like seismic or flooding or high winds or those things until they actually have a site in the PRA.

We have reviewed new reactor designs where -- who profess that their entire core damage frequency is less than ten to the minus seven per year. So therefore screening out something at ten to the minus seven per year would be equivalent of

1 screening out something that's equal to everything
2 else -- everything else that could possibly
3 contribute to core damage or releases.
4 And what I am questioning is is that
5 appropriate. I understand what the SRP says.
6 MR. TAMMARA: But that is present
7 guidance available. That's how we rely on the
8 regularity requirement.
9 MEMBER STETKAR: And that's why I asked
10 the question to get it on the -- to get it on the
11 record.
12 In Section 2.2.3.3 -- this is a
13 question about a particular analysis -- it said the
14 following principal types of hazards will be
15 considered with respect to each of the above areas
16 review. If they have a probability of occurrence
17 of greater than 10 to the minus seven per year,
18 which I just -- and two of them are missiles more
19 energetic than the tornado missile spectra and
20 pressure effects in excess of the design basis
21 tornado and what I am curious about is, is it
22 intentional for the staff to limit those missiles
23 and the pressure effects -- the wind loving
24 pressure effects to tornadoes because we know that
25 in the United States there are some locations in

1 particular -- southeastern United States and along
2 the Gulf Coast were in fact hurricane missiles and
3 perhaps hurricane wind blowing are more limiting
4 than tornado missiles. So was limitation in the
5 SER to tornado missiles intentional?
6 MR. TAMMARA: I think that is covered
7 under Section 2.3 meteorology and hydrology. But
8 2.1 and 2.2 are typically manmade hazards, not
9 natural hazards. Natural external.
10 MEMBER STETKAR: Yes. I got it.
11 MR. TAMMARA: So therefore I cannot
12 probably answer your question precisely. We might
13 have to rely on --
14 MEMBER STETKAR: Well, but in 2.2,
15 because that's your area, you're saying that if I
16 have a manmade hazard and I don't want to be
17 dramatic, but a local hazard that can -- manmade
18 hazard now that can generate a missile, point it at
19 the plant, that as long as that missile is less
20 energetic than a tornado missile I am okay.
21 And I am saying that may I should be
22 using tornado or hurricane because the hurricane
23 missiles may be more limiting. I don't know.
24 I am trying to understand why you
25 limited those manmade hazard missiles to comparing

1 them with tornado missiles rather than any external
2 hazard generated missile which could be a tornado
3 or a hurricane.
4 MR. TAMMARA: No, the first step is to
5 find out that the accident probability has ten to
6 the four minus seven it is -- if it is screened out
7 there is no question of evaluating the --
8 MEMBER STETKAR: Okay. So I got ten to
9 the minus five event that throw -- hurls a missile
10 at the plant. So I can't screen it out. It's less
11 than ten to the minus. It's ten to the minus five.
12 It hurls a missile at the plant. Do I compare that
13 missile to a tornado generated missile or to a
14 hurricane generated missile?
15 MR. TAMMARA: We'd probably we'd have
16 to evaluate the energy and see and compare. That
17 is the -- that is the part of the analysis. We
18 cannot throw it away but we are to -- we are to
19 evaluate that situation and the energy of that
20 missile. But so far that hasn't arised in our
21 evaluations thus far. But it may. I do not know.
22 MEMBER STETKAR: That's right, because
23 I don't know where they are going to put this plant
24 and I have no idea what manmade missile hazards
25 this plant might be exposed to, neither the

1 frequency nor the size nor the energy of those
2 missiles. We don't know.
3 MR. TAMMARA: But that will be the --
4 that will be the case when the COL applicant has to
5 address in the evaluate.
6 MEMBER STETKAR: We are not
7 communicating here. I am questioning whether the
8 comparison -- the energy comparison of those
9 missiles that I am hurling at the plant now ten to
10 the minus five per year so I can't screen them out
11 on frequency, whether that energy comparison should
12 be made against tornado missiles, which is
13 specified in the SER or against any externally-
14 generated missile which would include hurricane
15 missiles.
16 MR. TAMMARA: Why are you are comparing
17 that kind if you have -- if you have calculated the
18 missile you will have the missile and its impact.
19 We are not comparing and throwing away based upon
20 the other missiles.
21 MEMBER STETKAR: This says that I can
22 screen it out. If it's ten to the minus five I can
23 screen it out if it's less energetic than a tornado
24 missile.
25 MR. TAMMARA: If we -- if you can

1 demonstrate, yes.

2 MEMBER STETKAR: Doesn't say anything

3 about hurricane missiles.

4 MR. WARD: Excuse me. I want to be

5 clear just so we can answer the question properly.

6 But were you saying that you think hurricane

7 missiles may be more energetic?

8 MEMBER STETKAR: Oh, I know hurricane

9 missiles may be more energetic because that's why

10 we revised the high wind criteria.

11 MR. WARD: So it doesn't exceed a

12 tornado, which you think is less energetic.

13 MEMBER STETKAR: That may be the

14 rationale. But I am trying to get the staff to

15 answer why this is specifically focused on tornado

16 missiles.

17 MR. WARD: The other question I will

18 have to check will Chapter 3 is if it's a tornado

19 missile that was analyzed in Chapter 3 then that's

20 what they would look to as being the limiting case

21 an perhaps it is Chapter 3 that needs to consider

22 that.

23 MEMBER STETKAR: It may be. Again, we

24 are going chapter by chapter here.

25 MR. WARD: Right.

1 MEMBER STETKAR: And I am sensitive to
2 this because there have been COL applicants who
3 have had to change things because they're more
4 limited by hurricanes in particular South Texas but
5 and I think Turkey Point was more limited -- Turkey
6 Point was more limited by hurricanes.
7 So it's an issue that's come up that
8 the staff and us, you know, traditionally through
9 most of the United States looks only at tornado
10 missiles because you very quickly get past the
11 areas that are limited by hurricanes.
12 There may be a rationale. There
13 actually may be a rationale, Bill, about why
14 tornadoes --
15 MR. WARD: Well, I know recently they
16 upgraded the highest tornado wind speeds. I don't
17 know the details but that may be the reason.
18 MEMBER STETKAR: Anyway, that's --
19 MR. WARD: We will look it up.
20 MEMBER STETKAR: Yes, take a look at
21 it.
22 MR. TAMMARA: Thank you. That's all my
23 presentation.
24 CHAIRMAN BALLINGER: So who's next?
25 MR. LEE: I am.

1 CHAIRMAN BALLINGER: So who's next?
2 You are. Okay.
3 MR. LEE: So if we can go to slide ten.
4 Hi. My name is Mike Lee. Good morning. I was
5 given the hydraulic engineering section to review.
6 As you can see, this list of items that
7 the COL applicant must address in their application
8 is not unlike what you might find in NUREG 0800.
9 All these areas rely on-site-specific
10 information or scenarios that the applicant, the
11 COL applicant, would collect and present at the
12 time of the -- of an application.
13 Upon inspection, you'll see though that
14 geochemistry groundwater -- geochemistry is not one
15 of these items that's come up in an earlier
16 discussion and we'd be happy to take that question
17 back and get back to you on that at the next time
18 we come before you, if that --
19 MEMBER STETKAR: I didn't -- you know,
20 I understand it's on the record. I didn't want to
21 repeat it here.
22 MR. LEE: We will have an answer
23 because when Chapter 3 kind of shows up there may
24 be some open items. So we will review with the
25 subcommittee so we'd be happy to go ahead and do

1 our homework on that.

2 So if we can go to slide 11. Thank

3 you. All right. So as I said, the information on

4 the previous slide is what the -- it's site

5 specific and was provided by the COL applicant and

6 there is guidance out there on how to do those

7 reviews. For example, you have Reg Guide 1.206 and

8 more recently you have JLD ISG 2012.06 which the

9 staff is currently using to review the 5054

10 evaluations from the existing fleet.

11 As was mentioned earlier this morning,

12 there is a number of parameters that have already

13 been reviewed an commented on by this or an earlier

14 subcommittee related to groundwater levels tsunami

15 and precipitation rates relative to rainfall.

16 So in addition to collecting

17 information about the site that's based on geology

18 and meteorology and climatology and the like, the

19 COL applicant will have to also meet these -- this

20 design envelope. So if we can go to slide 11 or

21 12.

22 MEMBER STETKAR: I hate to do this to

23 you. Let me -- let me just make sure it's clear

24 because the applicant about this notion of what do

25 they mean in the vicinity of SSCs that are

1 important to safety that's sort of a different
2 philosophical question.
3 Let's get back to kind of a more
4 traditional question. Are we confident that the
5 COL applicant, if for example, the service --
6 central service water complement -- cooling water
7 heat exchanger building's cooling towers, if they
8 use them, or however they -- wherever they get
9 their water from and those underground safety
10 related piping tunnels.
11 Are we confident that the COL applicant
12 knows that they need to meet the two feet and one
13 feet criteria for those safety-related structures
14 also or do they apply or do they not apply?
15 Because everything I see is indexed to the nuclear
16 island. Put that up on a hill.
17 MR. LEE: Yes. No, that's a good
18 question and I think within the nuclear -- the
19 power bloc there is going to be a designation of
20 what structure systems are important to safety and
21 also assessment.
22 MEMBER STETKAR: But here in particular
23 for a COL applicant do I know that if I put the
24 nuclear island up on top of a hill and satisfy
25 everything in terms of flooding groundwater and

1 down at the base of the hill, and the hill might be
2 pretty big, I have my service water building and
3 tunnels that go from the stuff up on the hill to
4 down below, do I need to meet the same flood and
5 ground water levels for those service water
6 buildings because they are safety related.
7 MR. LEE: In my judgement, the short
8 answer is yes. I mean --
9 MEMBER STETKAR: In my judgement that
10 is too. I want to make sure -- that's my own
11 judgement. This is a subcommittee meeting. It's
12 not an ACRS meeting.
13 MR. LEE: And I can tell you from our
14 experience in the 5054 review that issue hasn't
15 been ambiguous.
16 MEMBER STETKAR: Yes. Well, I just
17 want to make sure that I couldn't necessarily find
18 -- because I couldn't determine what was in scope
19 and out of scope I couldn't necessarily find COL
20 information items in Chapter 2. Not Chapter 3 but
21 Chapter 2 that alert the COL applicant to the fact
22 that they need to meet these things. And, you
23 know, it might be obvious to a lot of people but a
24 COL applicant might say well, it wasn't in the DCD,
25 I don't need to necessarily meet it because it

1 wasn't in the certified design. So staff, you
2 can't ask me about it.
3 MR. LEE: I think the COL applicant will
4 be hard pressed to argue that some off -- you know,
5 just some structured system component that was
6 important to safety that wasn't necessarily in the
7 power bloc physically like a service water intake
8 structure or something like that wouldn't be
9 subject to these criteria.
10 MEMBER STETKAR: I think they would be
11 hard pressed. It's just that we are reviewing the
12 design certification and making sure that it
13 specifies clearly what is in the certified design
14 and what is the responsibility of the COL
15 applicant. Essentially no surprises because of the
16 COL applicant.
17 MR. LEE: Let's hope not.
18 MEMBER STETKAR: Okay. Thanks.
19 MEMBER SKILLMAN: Mike, I'd like to
20 build on John's earlier comment relative to the
21 limitation that KHNP put on maximum ground water
22 and flood.
23 The additional phrase for the SS or for
24 the areas close to SSCs or the buildings close to
25 the SSCs is an add on from the design cert from

1 combustion.

2 And so at least in my view that little

3 phrase carries an immense burden and it would be

4 prudent if that phrase was not there.

5 What is near to me or near to you or

6 what's near to one of my colleagues might be very

7 different than what our colleagues from KHNP think

8 is near and I can just imagine the torture that we

9 would go through to determine what the rate of

10 ingress is of ground water for something that's 100

11 yards away or 200 yards away or 500 meters away.

12 It just seems like it poses a question that does

13 not need to be addressed.

14 MR. LEE: Enters as an ambiguity.

15 MEMBER SKILLMAN: It does. So I just

16 want to reinforce John's earlier comment on that.

17 CHAIRMAN BALLINGER: I think that's a

18 question that we can take back with us. Thank you.

19 All right. I am on slide 12. All right.

20 So there is one COL information item

21 which is information item 2.4.1 and it stipulates

22 that the applicant is to provide -- the COL

23 applicant is to provide sufficient information to

24 verify that the hydraulic related events will not

25 adversely affect the safety basis for the APR1400

1 design.

2 The COL applicant is to characterize

3 the potential flooding hazards that may affect the

4 proposed reactor site and the COL applicant decides

5 on what combination of design features and that

6 could be elevation of door openings, the addition

7 of field to raise the power block raid, passive

8 transit system berms or administrative procedures

9 which will be used to mitigate the effects of any

10 potential flood hazard at the proposed site.

11 So the items that are identified here

12 are not unlike what we are currently seeing in our

13 reviews of the 5054 flood hazard evaluation. So

14 there is nothing new here.

15 So in closing, if we can turn to slide

16 13, the DCB applicant has provided plant-specific

17 hydrologic site parameters the staff finds as

18 acceptable, as I mentioned earlier. Those have

19 already been reviewed by this committee or an

20 earlier -- or this subcommittee on an earlier.

21 The applicant -- the DC applicant has

22 properly identified the site-specific information

23 be provided as part of any future COL application

24 and the applicant has -- the DCD applicant has

25 satisfactorily answered all earlier RAIs and there

1 are no open items. So be happy to answer any
2 questions you might have at this point. Thank you
3 for your time.
4 MEMBER STETKAR: No questions?
5 MR. RODRIGUEZ: So hi. My name is
6 Ricardo Rodriguez. I am a geotechnical engineer
7 NRO DSEA. I am representing Section 2.5. Just a
8 little caveat. A team of people is actually
9 working 2.5. Stephanie Devlin-Gill, David
10 Heestel, Luissette Candelario, they are both
11 seismologists and geothermical engineers as well.
12 So if there are any questions I might rely on them
13 for the response.
14 So slide 14 talks about essentially
15 what we cover in our review. Range is basic
16 geologic and seismic information, background
17 motion, circle formation, established surface
18 materials and foundation for different slopes.
19 Essentially what we did here is as a
20 caveat for the next slide please -- so what we are
21 looking at this -- at this -- for this section what
22 we our focus wants frank parameters that are
23 representative of a potential COL or ESP site. So
24 the applicant had to demonstrate that the
25 parameters as they described in the section in

1 Table 2.01 were representative of a reasonable
2 number of sites that they were included as part of
3 tier one.
4 There was a summary table included and
5 also not all the focus of the RAIs where the
6 applicant needed to provide the basis for those
7 parameters. As you can see here, some of the
8 parameters that we are -- we look at are that first
9 line should actually read a level of carrying
10 capacity not demand. Minimum assured velocity
11 allows a level of sediment as the applicant
12 discussed this morning.
13 The potential for seismic category one
14 structures. The potential for surface information
15 as I said earlier this barometer is expected to be
16 representative of a potential COL or ESP site.
17 Next slide. So I'll talk about the
18 findings we have for the first three sections. We
19 found that DC required the site specific geology
20 considerations are addressed by COL applicants in
21 accordance with the regulations.
22 Also, the DC requires COL requirements
23 to conduct site specific BSHA and site response
24 analysis in accordance with their relations and
25 their bullet. We had a number arise from this

1 issue but it was the result at the end. The site
2 specific sub-surface profiles need to be compared
3 to the profiles in the DCD to ensure that the
4 parameters in Chapter 3.7 are relevant to COL
5 sites.
6 For finding the DCD required the COL
7 applicants show no potential for tectonic or
8 nontectonic surface information. Any questions?
9 Next slide. So the two more
10 geotechnical engineer related sections are 2.4 and
11 2.5. We as a number of RAIs -- the majority of
12 them were related to soil or rock informing the
13 requirements. The applicability of static
14 parameters especially related to the structure of
15 fill, complications regarding the calculation of
16 carrying capacity in sediment.
17 We wanted to make sure that the
18 protection are adjacent to and under seismic
19 categories was addressed and also for 2.5 we asked
20 and RAI providing asking the static events the
21 ability of all natural manmade slopes.
22 In summary, the applicant adequately
23 addressed RAIs in many instances. They created COL
24 -- new COL information items tasking the future COL
25 applicant to authorize the issues at hand.

1 And on a related note, as we talked
2 about earlier, we were aware that the essentials of
3 this water building were out of scope. We had
4 that very same question at the very beginning. We
5 had -- we had a real issue with the SED people so
6 we were aware of that. And so we reviewed this
7 section with the understanding that there will be
8 signed by the COL.
9 MEMBER STETKAR: That's -- yes, and I
10 got that. I was fairly confident in that answer
11 when I asked the question. But I wanted to make
12 sure that the applicant was on record clearly
13 because, as I said, the first thing that I look to
14 -- because essentially a lot of the stuff in
15 Chapter 2 was silent on those buildings.
16 Paid a lot of attention to the nuclear
17 island in particular and the diesel generator
18 building. And said, well, what about those
19 buildings.
20 So the first thing I looked at was the
21 figure that I referred to in Chapter 1, which to me
22 said they are part of the certified design because
23 they are buildings. It wasn't flow diagrams. And
24 my bigger concern now is to make sure that it's
25 really clear in the COL information items in both

1 Chapter 2 and Chapter 3 what the COL applicant
2 needs to assure regarding those buildings and the
3 connecting tunnels.
4 MR. RODRIGUEZ: Right. Right.
5 So I know for a fact there is -- I
6 can't remember the name of the COL item number but
7 there's a COL item that's state -- that the COL
8 began has a responsibility essentially to decide
9 those two other buildings.
10 MEMBER STETKAR: Well, we -- I didn't
11 look at Chapter 3 because I ran out of gas. But,
12 again, Chapter 3 may be just structural design --
13 structural and seismic design. It doesn't
14 necessarily address subsurface soils and fill and
15 ground water and flooding levels and all of that
16 kind of stuff which are Chapter 2 types of things
17 and wind blowing and all of that kind of stuff.
18 Well, wind level is probably Chapter 3.
19 MR. RODRIGUEZ: Yes. So next slide.
20 So these are the completion that RDS staff came up
21 with. So there are new open items that are part of
22 the Chapter 2 review.
23 There are 15 permission items out the
24 five -- Chapter 2 five that adequately represent
25 the actions needed to be taken by the potential COL

1 applicants and the applicant identified --
2 appropriately identified appropriate geologic,
3 seismologic, and geotechnical site parameters and
4 site specific formation to be provided as part of
5 any future COL application.
6 And the staff is currently tracking
7 complementary items. Also as I mentioned at the
8 beginning, we recently were made aware last week
9 actually there was a direct response of an RAI --
10 subject RAI that may have some impact into Section
11 2.5 and we are currently tracking the resolution of
12 that RAI. So I have no other details than that
13 because it's still draft. But it's a note for the
14 committee. That is -- do you have any questions?
15 CHAIRMAN BALLINGER: We are remarkably
16 ahead of schedule by an hour. And so we have, I
17 think, two choices. We can go to lunch now and
18 come back at noon or we can pick up and begin
19 Chapter 5 assuming that KHNP and everybody can do
20 that. I'd ask people's advice what do we think we
21 should do.
22 MEMBER STETKAR: Oh, some of us have --
23 some of us have a meeting at 12:00 so --
24 CHAIRMAN BALLINGER: Including myself.
25 Including myself. Okay.

1 MEMBER STETKAR: But you don't need to
2 be there.
3 CHAIRMAN BALLINGER: So that reduces the
4 number of options to one, which is we start. So
5 can the KHNP people -- can you shift out? Is that
6 going to work?
7 MR. SISK: What's the final plan?
8 CHAIRMAN BALLINGER: Oh, the plan is to
9 push forward. Very good. Thank you.
10 MR. WARD: Excuse me, can we have five
11 minutes to get Chapter 5 down from NRC here?
12 CHAIRMAN BALLINGER: We'll take a five
13 minute hiatus.
14 (Whereupon, the above-entitled matter
15 went off the record at 10:57 a.m. and resumed at
16 11:05 a.m.)
17 CHAIRMAN BALLINGER: Okay. It's yours.
18 MR. SISK: Okay, Dr. Ballinger. Thank
19 you. Rob Sisk with Westinghouse again. We are
20 ready to go with Chapter 5. I think given the time
21 allotment; and hopefully have a good discussion for
22 this section, we think we can get through 5.2
23 before lunch. I understand you have a noon
24 deadline, so we will try to cover 5.2 this morning
25 and then we'll cover the rest after lunch or at the

1 next available timing as it works out. So if
2 that's acceptable to the ACRS, I'll turn it over to
3 Minseok Kim and he will lead us through Section
4 5.2, or Chapter 5.2.
5 MR. MINSEOK KIM: Okay. Good morning.
6 My name is Minseok Kim. I'm one of the Chapter 5
7 engineer. I really appreciate the opportunity to
8 participate this meeting and present Chapter 5.
9 Let me start. The contents of today's
10 presentation for Chapter 5 is on the screen.
11 Firstly, the overview of Chapter 5. And then the
12 reactor coolant system and also safety connected
13 systems section by section will be presented,
14 including the open items. Finally, I will
15 summarize. And that's the end of the presentation.
16 This slide shows the list of submitted
17 documents. Presented here for Chapter 5 itself and
18 Tier 1, there are four technical reports. There
19 have been 77 questions and all of the questions
20 were responded by KHNP. There are six questions
21 for RCP were submitted after the issue of the SCE.
22 Chapter 5 section overview. Section
23 5.1, Summary Description, describes the design
24 features of the reactor coolant system. 5.2,
25 Integrity of RCPB, describes the measures that

1 provide and maintain the integrity of the RCPB
2 throughout the facility's design life. 5.3,
3 Reactor Vessel, describes the reactor vessel
4 material issues. Finally, 5.4, RCS Components and
5 Subsistent Design, describes the reactor system
6 components.
7 Okay. Here are three of today's
8 presenters shared 5.1, Summary Description. The
9 RCS and the components are shown in the figure. On
10 the left of the slide the design features of
11 APR1400 are listed. It includes 60 years design
12 life and primary and secondary operating
13 conditions. APR1400 is a pressurized water reactor
14 with two closed loops. The major components are
15 the reactor vessel, two parallel heat transfer
16 loops each containing one steam generator and two
17 RCPs, a pressurizer connected to the hot leg on
18 loop No. 2. All components are located inside the
19 containment building.
20 MEMBER SKILLMAN: Before you proceed to
21 that slide --
22 MR. MINSEOK KIM: Okay.
23 MEMBER SKILLMAN: -- let me ask you to
24 go back the slide 2, please. One more. Which
25 document provides the accounting for the

transients, the number of heat-ups, cool-downs, LOCAs, main steam safety valve openings of 150-100 or 190-100 or 50-90-50 load swings? Where are the transients accounted for for the reactor coolant system pressure boundary? I do not see them in Tier 1 or Tier 2.

MR. MINSEOK KIM: Is that question for THE -- THEN occurrences? Is it?

MEMBER SKILLMAN: Rob, what I'm really asking for is your reactor coolant system functional specification bases.

MR. SISK: You understand? We'll take that as a note. We'll get back to you after lunch.

MEMBER SKILLMAN: Let me tell you why I'm asking. This plant does not have isolation valves. This plant can run backwards in several loops depending on what the pump configuration is. And I'm particularly interested in the reverse flow delta T versus time for if you drop a pump, four pumps, you drop one pump, your now idle pump runs backwards. You go back up on your anti-rotation device, but that loop is now flowing backwards. And if you are operating one pump in each loop, the idle loop in -- the idle pump in that loop is running backwards.

1 So I'm curious where that is addressed
2 in your thermal hydraulic cycles as the basis for
3 your ASME Section III, Class 1 analysis.
4 MR. SISK: I understand the question.
5 MEMBER SKILLMAN: Thank you.
6 MR. SISK: We have -- please.
7 MR. ROE: Good morning. My name is Tae
8 Sun Roe working for KEPCO E&C.
9 That kind of information is included in
10 the summer hydrant transient document. It's not
11 listed in this list of submitted documents. But
12 that document includes the transient including the
13 one pump down and it contains the flow variation,
14 temperature variation and pressure variation and
15 number of occurrence for the transient.
16 And the question you said regarding the
17 reverse flow, I think the Dr. -- Mr. Choi will
18 answer on that question, right?
19 CHAIRMAN BALLINGER: You said that
20 there was a document. Which --
21 MEMBER SKILLMAN: I would like -- if we
22 may see that document, that would help me. That
23 way I will understand the transient count, or the
24 number of transients that are included for a 60-
25 year design life for this reactor coolant system

1 pressure boundary. So if we could see that
2 document, I would appreciate it.
3 MR. MINSEOK KIM: As I understand the
4 description for the transients and occurrences are
5 listed in Chapter 3, Section 3.9. Is that right?
6 MEMBER SKILLMAN: For the reactor
7 coolant system?
8 MR. TAE HAN KIM: This is Tae Han Kim
9 from KEPCO E&C. 3.391.
10 MR. MINSEOK KIM: 391?
11 MEMBER SKILLMAN: Thank you. I will
12 look there. I would have thought they were in
13 Chapter 5 for the reactor coolant system.
14 MR. SISK: So Rob Sisk, Westinghouse
15 again. So please refer to Chapter 3. And there
16 was a question still left on the table about the
17 reverse flow that you were going to address? Okay.
18 So I wanted to make sure we got that part of the
19 question resolved. And then we're going to have a
20 -- just a brief response on the reverse flow.
21 MEMBER SKILLMAN: Thank you. I'd like
22 to hear that. Thank you.
23 MR. CHOI: Good morning. My name is
24 Seognam Choi. I'm senior engineer of the Component
25 Design and Mechanical Groups. And we have two

1 questions in April meetings.

2 MEMBER SKILLMAN: Yes.

3 MR. CHOI: Yes. And the first one is

4 the momentum and the flow load changes in reactor

5 coolant system. And second is the reverse flow

6 through the RCS loop. It's accounting for the RCS

7 loading analysis? Yes. And then we try to the

8 analysis in progress and not -- I'm sorry is not

9 finished yet, but in about one or two month we try

10 to finish the report. And then we consider

11 the full load, the mechanical hydraulic force

12 because it by the equivalent and it's calculated

13 and applied to the RCS coolant and some other. And

14 then the hydraulic forces are due to the frictions

15 and the momentum changes are caused by reactor

16 coolant flows. And we tried to -- the in progress.

17 I'm not telled about the district, but later then I

18 will try to the answer that you are questions.

19 MEMBER SKILLMAN: In the future will be

20 fine.

21 MR. CHOI: Yes.

22 MEMBER SKILLMAN: Thank you.

23 Rob, thank you.

24 MR. SISK: Okay.

25 MR. MINSEOK KIM: If I may resume on

1 the presentation, the slide on the functions of
2 reactor coolant system. First one is energy
3 transfer from the core to the steam generator to
4 produce steam for the turbine generator. Secondary
5 barrier to the list of fission products. And there
6 are several more functions listed.
7 The principle parameters of the reactor
8 coolant system can be found in Table 5.1.1-1.
9 MEMBER SKILLMAN: Could we back up one
10 slide, please? Back one more.
11 Your last bullet, venting of steam and
12 non-condensable gases. I read in the description
13 that there's the vent from the pressurizer and
14 there's the vent from the reactor vessel head.
15 MR. MINSEOK KIM: Yes.
16 MEMBER SKILLMAN: What is the sizing
17 basis of the vent from the reactor vessel head? Is
18 that intended to ensure that you do not have a gas
19 bubble on the reactor vessel head after an
20 accident?
21 MR. TAE HAN KIM: This is Tae Han Kim
22 from KEPCO E&C. RCG, reactor core gas venting
23 system including pressurizer venting and reactor
24 header venting is based on the --
25 MEMBER STETKAR: Can you please speak

1 up a little bit so that --

2 MR. TAE HAN KIM: Yes, they have

3 natural circulation analysis. NCC. Recall, NCC.

4 MEMBER SKILLMAN: Oh, natural

5 circulation analysis?

6 MR. TAE HAN KIM: Yes.

7 MEMBER SKILLMAN: What consideration is

8 given in that analysis to elimination of loops

9 seals in the cold legs?

10 MR. TAE HAN KIM: I'm afraid that that

11 is little bit different perspective of -- regarding

12 the loop --

13 (Simultaneous speaking.)

14 MEMBER STETKAR: Will you please speak

15 up so that we have you on the record? You have to

16 speak into the microphone.

17 MR. TAE HAN KIM: Yes. Thank you. I

18 think that is a little bit different design feature

19 of loop seal. Venting of steam and condensable gas

20 is venting from the head of pressurizer and head of

21 RCC base, not in the reactor -- I mean, loop pipe.

22 MEMBER SKILLMAN: I understand that.

23 I'm placing that question on the record for future

24 action, please. Thank you.

25 MR. MINSEOK KIM: 5.2.1, Conformance

with Codes and Code Cases. The classification of RCPB conforms with the requirements of 10 CFR Appendix A Division 1. A quality group ABC in accordance with Reg Guide 1.26, and are designed and fabricated with ASME Section III for in-service -- service inspection to RCPB. 5.2.4 and 6.6 provide the description of the application of ASME Section XI.

For the in-service testing to RCPB application of ASME Code for Operation and Maintenance of MPP can be found in Section 3.9.6. Reg Guide 1.84, 147, 192 are used in determining the applicable ASME Code cases.

5.2.2, Overpressure Protection.

MEMBER STETKAR: Before you start on this, I have a general question, because you're -- no, you can keep on slide 8 -- because you're going to start talking about valves here. But I want to talk about configuration.

In Section 5.1.2 there's a general statement that says overpressure protection for the RCS is provided by four POSRVs connected to the top of the pressurizer. These valves discharge to the in-containment refueling water storage tank where steam is released underwater to be condensed and

1 cooled. Good.

2 If the steam discharge exceeds the

3 capacity of the in-containment refueling water

4 storage tank, it is vented to the containment

5 atmosphere. I found that strange. That's unusual.

6 So I looked at your Figure 5.1.2-3 in the DCD where

7 I see that in each of the two lines from the POSRVs

8 to the IRWST there are motor-operated three-way

9 valves. That to me is a very unusual design. I

10 don't think I've seen that.

11 So I have two questions. First of all,

12 under what conditions is the IRWST not capable of

13 handling a discharge from the POSRVs? In other

14 words, what conditions would require me as an

15 operator to vent directly to the containment?

16 That's the first question. Do you have

17 an answer to that? Or if not, we can do it after

18 lunch.

19 MR. ROE: My name is Tae Sun Roe from

20 KEPCO E&C. During the design-basis instance we did

21 not discharge to the containment atmosphere or the

22 discharge from the POSRV goes to the IRWST. But in

23 case of the beyond-design-basis such as a severe

24 accident, then the IRWST cannot cool all discharge

25 from the POSRV condensing the steam. So in that

1 case the operator open the survey valves and the --
2 discharge to the containment atmosphere. So is not
3 within the design-base. It's beyond-design-basis
4 such as a severe accident.
5 MEMBER STETKAR: Well, okay. I'm not a
6 severe accident person. Dr. Rempe and the good Dr.
7 Powers, as opposed to the bad Dr. Powers, are more
8 severe accident.
9 When you say "severe accident," what in
10 particular do you mean by that? Because if you're
11 relieving the energy into the containment, I still
12 have to remove the energy from the containment. So
13 I don't understand why it makes a difference
14 whether I'm blowing it into the containment or
15 whether I'm blowing it into the IRWST.
16 MEMBER POWERS: The containment
17 pressure goes up.
18 MEMBER STETKAR: Because the
19 containment pressure would go up either way,
20 wouldn't it?
21 MR. OH: This is Andy Oh, KHNP
22 Washington Office. And during the severe accident
23 lot of hydrogen can be generated from the melted
24 down core, so if that hydrogen is inputted in the
25 IRWST and IRWST is -- lot of hydrogen can be

accumulated in a small amount of the volume. So in order to prevent that event we have use three-way belt to vent it out to the containment to atmosphere to the preventing some of the high accumulation of the hydrogen inside the IRWST.

MEMBER STETKAR: Thank you. So it's basically a hydrogen vent?

MR. OH: Yes. Three belt is major role is venting for hydrogen, the preventing of the accumulation of hydrogen inside the IRWST.

MEMBER STETKAR: Okay. Thank you. I don't know whether anyone else has any questions on that, because I have a separate question.

Because it's very unusual to have motor-operated valves in the discharge flow path from the primary safety valves, I'm curious whether it is physically possible for those valves to block flow. And I don't want a licensing answer. I don't want an electrical answer. I want to understand how those valves are configured internally such that I have assurance that regardless of how they may fail internally I can still have a discharge from the POSRVs to some place.

Because if I can't, I don't have

1 pressure relief from my primary system. And if one
2 of them is blocked, I don't have half of the
3 pressure relief from my primary system. So I
4 really want to understand how those valves are
5 configured internally and how you have assurance
6 that indeed they are always open to someplace.
7 MR. TAE HAN KIM: This is Tae Han Kim,
8 KEPCO E&C. I think you questioning the three-valve
9 blocking case. Any possibility -- is that right,
10 your concern? Any possibility of blocking the
11 three-way valve?
12 MEMBER STETKAR: I'm interested in the
13 possibility of a three-way valve being positioned
14 such that it can block or severely restrict flow.
15 MR. TAE HAN KIM: We design and -- for
16 procurement we gave it some kind of requirement not
17 to have --
18 (Simultaneous speaking.)
19 MEMBER STETKAR: I didn't see any
20 discussion of these valves whatsoever in the DCD,
21 nor did I see any discussion of these valves in the
22 SER. And that's why I'm really curious about these
23 valves, because I haven't seen any valves like this
24 in any other design that I've ever looked at.
25 MR. MINSEOK KIM: Minseok Kim speaking.

In Chapter 6.8 is there any description for three-way valve there? Please somebody check this.

MR. SISK: This is Rob Sisk, and for the sake of time we're going to take a look and get back to you after lunch.

MEMBER STETKAR: Yes, if you can.

MR. SISK: We'll continue on.

MEMBER STETKAR: I searched a few places and I did some word searches. I think I looked at Chapter 6, but I may not have done the right word searches.

MEMBER SKILLMAN: I would like to build on John Stetkar's question, please. I'm in your Tier 1 document at Figure 2.4.1-2. It's on page 2.418. And this image shows the four POSRVs relieving to the IRWST but also relief to the RDT, the reactor drain tank. And I searched on reactor drain tank and I do not find the reactor drain tank described anywhere in the document. So I'm curious, what is the RDP versus the IRWST?

Furthermore, as I read the documentation, the piping from the POSRVs to the IRWST is not seismic. And I'm curious why that piping is not seismic. Two questions.

MR. MINSEOK KIM: The drain tank is --

1 I think it's -- it can be found in Chapter 9. The
2 drain tank is -- it belong to chemical and foreign
3 control system. And --
4 MEMBER SKILLMAN: I'll be happy to
5 look, but I don't think it's mentioned in the SER.
6 Now maybe in the SER for Chapter 9, but it's
7 certainly not in the SER for Chapter 5, even though
8 it's identified as part of your relief system off
9 the reactor coolant system.
10 MR. TAE HAN KIM: This is Tae Han Kim
11 from KEPCO E&C again. This (inaudible) line into
12 the Tier 1 is showing the -- just a kind of a
13 leakage indicates of line we have leakage. Then we
14 flowing down to the RDT. This not the main purpose
15 of discharge to POSRV.
16 MEMBER SKILLMAN: But it's described in
17 Chapter 9, you say, Auxiliary Systems?
18 MR. TAE HAN KIM: I think so, but I
19 have to confirm that.
20 MEMBER SKILLMAN: Let me leave those
21 questions on the record, please. Thank you.
22 MR. OH: This is Andy Oh, KHNP again.
23 For -- in terms of three-way valve, that
24 classification is described in Chapter 3, and also
25 the function is described in Chapter 19.

1 CHAIRMAN BALLINGER: So I'm also
2 assuming that the issue related to severe accidents
3 and power to these valves is discussed in one of
4 those chapters. Is that correct?
5 MR. OH: Yes. Andy Oh again. I think
6 so, yes.
7 MEMBER STETKAR: I'll look at Chapter 3
8 and Chapter 19 over lunch to see what they say
9 about those valves, but my suspicion is given
10 what's typically in those chapters they're not
11 going to describe what the valves look like. I
12 want to understand can those valves block or
13 severely restrict flow? Is there any way that they
14 can block or severely restrict flow?
15 CHAIRMAN BALLINGER: Regarding the
16 seismic qualification I was trying to search
17 through that, and there's a difference between
18 Seismic Category 1 and Seismic Category 2 for that
19 piping that's in one of the documents somewhere,
20 but it's unclear.
21 MR. SISK: And just -- this is Rob
22 Sisk, Westinghouse. Just to address Gordon's
23 comment, if you take a look at Section 9.3.3.2.4,
24 Component Descriptions, it does go a little bit
25 into RDT. I don't know whether it would address

1 all your concerns, but there is a bit of a
2 discussion.
3 MEMBER SKILLMAN: Yes, I'm there now.
4 I can see it.
5 MR. SISK: Okay.
6 MEMBER SKILLMAN: I was anticipating,
7 but since it's credited out of Chapter 5, it would
8 show up somewhere in 5, but particularly because
9 it's in Tier 1 and shown on that image, there would
10 have been a description of it as part of the relief
11 system or drain system. So thank you.
12 MR. MINSEOK KIM: Okay. Overpressure
13 protection of the RCS and steam generator is
14 precluded by operation of the pressurizer POSRVs,
15 MSSVs and by the RPS. Pressure lift capacity is
16 conservatively sized to satisfy the overpressure
17 requirements of ASME Section III, Division 1, NB
18 7000. They are designed to maintain below 110
19 percent of design pressure during the worst case
20 loss-of-load event with (inaudible) reactor trip.
21 SSE suction relief valve provides sufficient
22 pressure relief capacity to mitigate the most
23 limiting LTOP events during low-temperature
24 conditions.
25 MEMBER STETKAR: Are you going to

1 discuss the LTOP protection in other slides, or is
2 this the only slide that mentions it?
3 MR. MINSEOK KIM: For the design
4 feature this is the only slides --
5 MEMBER STETKAR: Okay.
6 MR. MINSEOK KIM: -- and there are open
7 items regarding LTOP.
8 MEMBER STETKAR: That's okay. Then let
9 me ask my questions about LTOP here. I understand
10 the design, first of all. My question is, first
11 question is do I have assurance that both SCS
12 suction lines will be open to those relief valves
13 at any time that LTOP protection is required? In
14 other words, there's a relief valve in each suction
15 line. And to have that relief valve provide
16 protection I need both of the motor-operated valves
17 from the hot leg to that relief valve -- they must
18 be open, right?
19 (No audible response.)
20 MEMBER STETKAR: Say, yes, that's
21 correct. I didn't find anything that specifically
22 told me as a plant operator that I must have those
23 motor-operated valves open. I can find things that
24 are written in the draft technical specifications
25 that say the relief valves must be operable. And

they give me an opening set point -- opening pressure set point. I can find things in the technical specifications that says I must have at least one shutdown cooling system in operation during modes 4, 5 and 6. I cannot find anything that actually tells me I need to have both of those lines open.

So if you can tell me where in some sort of guidance the COL applicant knows that he needs to write his procedures such that below the -- are the temperatures proprietary or are they not proprietary? The LTOP enable and disable temperatures, are they proprietary or not?

MR. TAE HAN KIM: This is Tae Han Kim from KEPCO E&C again. The LTOP valve is -- as you explained to us, it is told in the (inaudible) shutdown cooling system, and the shutdown cooling system is manually put in the operation when there is -- the RCS decrease down to the mode, low mode. So at that time the LTOP valve is automatically connected when we open the isolation valve to the RCS.

MEMBER STETKAR: Correct. I understand that, but if I can cool down using only one SCS train, I will only have one valve connected to the

1 system. Now I know one valve has adequate
2 relieving pressure, but many of the discussions in
3 the DCD seem to indicate that I have two relief
4 valves available.
5 MR. TAE HAN KIM: Yes, we have two
6 relief valves, but capacity is based on the -- how
7 can I say? The -- two each one have a full
8 capacity for our evaluation for LTOP relieving.
9 MEMBER STETKAR: Okay.
10 MR. TAE HAN KIM: In the case of we
11 have only one shutdown cooling pump line available,
12 we can have a full capacity of LTOP.
13 MEMBER STETKAR: I think what I'm
14 trying to understand is is it possible, is it
15 allowed for me as a COL applicant -- am I allowed
16 to go into the LTOP regime if -- and I won't
17 specify the temperature, but if I'm below the
18 enable temperature am I allowed to have only one
19 SCS cooling train allowed, or am I supposed to have
20 both of them aligned?
21 MR. TAE HAN KIM: For normal shutdown
22 cooling to the refueling operation we need two
23 shutdown cooling operation for normally pre-down
24 and maintain the refueling state. But we also have
25 a -- based on the SRP, we -- one shutdown cooling

1 pump can also maintain into the shutdown state even
2 though the little bit longer time is needed.
3 So for the case of two operation we
4 have a full capacity of LTOP. And even though we
5 have one line of SSCS, we have a -- what can I say,
6 full capacity of LTOP by each.
7 MEMBER SKILLMAN: The limiting
8 condition for operation is 3.4.11, Chapter 16, and
9 it says two operable LTOP systems shall be operable
10 as follows: Two operable. It then gives
11 conditions if a valve is not operable. But it
12 appears as though the answer to John's question is
13 two.
14 MEMBER STETKAR: Well, I used to run a
15 plant and I will tell you that if the operability
16 requirement is that the pressure set point must be
17 greater than 530 psig, I will say that valve is
18 operable even though it's isolated from the reactor
19 coolant system. It's still operable in the same
20 way that a standby pump is still operable despite
21 the fact that it's not running. Unless something
22 tells me that I need by law to open the motor-
23 operated valves, I'm not going to do that unless I
24 physically need to do that somehow. And that's
25 what I'm trying to establish, whether or not --

1 MEMBER SKILLMAN: There's something
2 that --
3 (Simultaneous speaking.)
4 MEMBER STETKAR: -- there's something
5 that tells me that whenever I go below that enable
6 temperature I must open all four of those motor-
7 operated valves.
8 MEMBER SKILLMAN: I see what you're
9 saying. Okay. I got it.
10 MEMBER STETKAR: And I don't -- I can
11 find things actually in the DCD and in the SER that
12 lead me to believe that the intent is that I should
13 open all four, but I want to have confidence that
14 if indeed that's what's intended that the people
15 who operate the plant know clearly that that's
16 what's intended. Because they're going to write
17 the procedures. And if they call cool down using
18 only one train because they're component cooling
19 water temperature is 47 degrees --
20 MEMBER SKILLMAN: Thirty-six degrees,
21 yes.
22 MEMBER STETKAR: -- they're going to do
23 that. They're going to cool down like a rock.
24 MR. ROE: Yes, Tae Sun Roe from KEPCO
25 E&C. I'm going to add some statement regarding

1 your question or concern.

2 As you know, the Chapter 5.4.7 shutdown

3 cooling system describes the -- such kind of case

4 when you mention. When the LTOP alarms occurs,

5 then the operator should open the suction line

6 isolation valves if it's closed. So the overflow

7 valves should be open in that case. I'm not sure

8 that that helps.

9 MEMBER STETKAR: And I -- yes. And

10 that might be it. And that alarm comes in at the

11 LTOP enable temperature?

12 MR. ROE: Yes, right.

13 MEMBER STETKAR: Okay.

14 MR. ROE: If the temperature is below

15 the enable temperature, then -- the isolation

16 valves is not open yet, then --

17 MEMBER STETKAR: The operator will

18 receive an alarm.

19 MR. ROE: -- operator should open the

20 (inaudible) valves.

21 MEMBER STETKAR: Good. I read about

22 those alarms, but I wasn't quite sure exactly what

23 temperature they -- okay. That probably answers it

24 well enough for me. Thank you.

25 I mean, I had a couple of other

1 questions if you can bear with me, Ron, on LTOP.
2 I'll wait until we get to SCS for the other
3 questions. I don't know if anyone else has LTOP
4 questions.
5 MR. MINSEOK KIM: Continue. The figure
6 shows the pressurizer POSRV. Main valve is here.
7 Two spring-loaded pilot valves. And here the
8 motor-operated pilot valves. The blue scale shows
9 the automatic actuation for the RCS overpressure
10 protection. Red shows the RCS rapid
11 depressurization, bimanual actuation.
12 In the April meeting there was a
13 question regarding the ASME quality requirement.
14 POSRV can be valid committed by ASME Section III as
15 the overpressure protection device. Regarding the
16 capacity, according to ASME Section III POSRV has
17 ASME capacity. Here is the example for the
18 certification number.
19 MEMBER SKILLMAN: Yes, that was my
20 question, and I appreciate the citation to the ASME
21 Code. And I think Dr. Riccardella reinforced that,
22 that there is an allowance for a pilot valve versus
23 a spring valve. And that was the thrust of the
24 question back in April. Thank you for answering
25 that. Excuse me, John.

1 CHAIRMAN BALLINGER: Before we go to
2 the next slide, you have a question?
3 MEMBER STETKAR: Oh, no. You said
4 before we go -- I do before we go to the next
5 slide, once we get back to the slide we were on.
6 CHAIRMAN BALLINGER: Oh, okay. Back to
7 slide 9. A materials question: I was going
8 through the list of materials that are used and
9 everything. And as far as I can tell this is the
10 only place where Alloy X750 is used, which is a
11 super alloy. And I think that's true, but what I'd
12 like to know is if that's true, what is the heat
13 treatment used for that alloy, for that X750?
14 MR. TAE HAN KIM: Pardon me, sir. This
15 is Tae Han Kim from KEPCO E&C. We didn't catch
16 your question.
17 CHAIRMAN BALLINGER: The spring there,
18 as far as I could read that spring material is
19 Alloy X750, which is a high-strength nickel-based
20 alloy. And my question is assuming that's true --
21 I guess confirm that it's true. And if it is,
22 what's the heat treatment for that material? What
23 condition is it in? Because certain heat
24 treatments for that material are very susceptible
25 to cracking. So I'm just curious as to whether

1 it's got just a standard spring temper, double
2 aging, or what's the heat treatment for that
3 material? Because there's a history in our
4 industry where Alloy X750 has not reacted very well
5 in some cases.
6 MR. JONGSOO KIM: Jongsoo Kim for KEPCO
7 E&C. I think the Alloy X750 is usually in other
8 increment. For example, a CDM. And that describe
9 the heat treatment condition. And you can -- and
10 let me check that section. There's another
11 section, Section 4.
12 PARTICIPANT: Chapter 4.
13 MR. JONGSOO KIM: I'm sorry. Chapter
14 4.
15 CHAIRMAN BALLINGER: Chapter 4?
16 MR. JONGSOO KIM: Yes.
17 CHAIRMAN BALLINGER: Chapter 4. Okay.
18 MR. JONGSOO KIM: But that section is
19 for the other components, but I think the same
20 materials.
21 MEMBER STETKAR: Maybe some material,
22 but maybe different heat treatment?
23 MR. TAE HAN KIM: Yes, sir. This is
24 Tae Han Kim again. This is the kind of better
25 specific material, so supplied by vendor. So we

will check it, what kind of material heat treatment is done. So we would get back to you.

CHAIRMAN BALLINGER: Thank you.

MEMBER STETKAR: Don't change. My first question on this slide is if I look at the blue box I see motor-operated valves on the inlet to the pilot and on the outlet from the pilot on this slide. If you can point to them with the -- if I look at DCD Figure 5.1.14-1, I see a motor-operated valve on the inlet and I see a manual valve on the outlet. So which is it?

CHAIRMAN BALLINGER: It's a magnification problem.

MEMBER STETKAR: Huh?

CHAIRMAN BALLINGER: The outlets are not motorized.

MEMBER STETKAR: Oh, those are manual valves on the outlet?

CHAIRMAN BALLINGER: Yes, It's just a number --

(Simultaneous speaking.)

MEMBER STETKAR: Oh, okay. I didn't -- it's just a valve?

CHAIRMAN BALLINGER: Yes.

MEMBER STETKAR: Okay. Good. Thanks.

I didn't --

MR. MINSEOK KIM: I think this one is motor-operated.

MEMBER STETKAR: Is motor-operated and the upper one is manual. Okay. Good.

My question about those was if I'm an operator, if there are four combinations of two valves being closed that will prevent the POSRV from operating in either the pilot-operated or the spring-loaded mode, how do I as an operator know that those four valves are open?

MR. YUNE: I'm Mr. Yune from KEPCO E&C. Let me explain the protocol with spring-loaded pilot valve, what are the variable. What are variable used in three quantity? If spring-loaded pilot valve open but pressure decrease, that should be shut down. But if not fail, then maintain open, the operator open -- close the motor-operated valve.

The other manual valve, we can check every (inaudible) the spring-loaded pilot valve set point. Then we close the manual valve. If not open, then manual open. So we do not want the main valve open. So that case we close the manual valve. Then operator can check the water

1 (inaudible) valves. In MCR there's two pairs
2 position indicated in the MCR and water operated
3 power removed during power operation.
4 MEMBER STETKAR: Okay. Power is
5 removed from the motor-operated valves during --
6 MR. YUNE: Yes, during power operation.
7 MEMBER STETKAR: Well, if I'm an
8 operator and during power operation my valve sticks
9 open, then I have to go re-energize the motor to
10 close the valve?
11 MR. YUNE: Yes, during -- infrequently
12 fail close and power and close the motor valve.
13 MEMBER STETKAR: That's interesting.
14 So I get to blow-down my system for a while while I
15 go re-energize power.
16 Did I hear you -- do I have valve
17 position indication in the main control room on
18 both the motor-operated valve and the manual valve?
19 MR. YUNE: Yes.
20 MEMBER STETKAR: And the manual valve
21 also?
22 MR. YUNE: Yes.
23 MEMBER STETKAR: Thank you.
24 MR. MINSEOK KIM: Before going further
25 I'm afraid that the slide is not the final. Please

1 give time to change the slide. We have some
2 modification on the slide, but we did not --
3 MEMBER REMPE: Mr. Chairman, why don't
4 we use this as an opportunity for a break?
5 CHAIRMAN BALLINGER: Yes, I didn't
6 understand the question. You say the next slide,
7 which is slide 10 -- whoops, that's not the slide
8 that I got here. Okay.
9 MR. MINSEOK KIM: Yes.
10 CHAIRMAN BALLINGER: I understand.
11 MEMBER SKILLMAN: I believe the
12 gentleman said that there needs to be a correction
13 to the --
14 CHAIRMAN BALLINGER: Yes.
15 MEMBER SKILLMAN: -- image on this
16 slide.
17 MR. SISK: We need to caucus a little
18 bit on this particular question and topic and get
19 back. And I'm looking at time and the schedule.
20 We could do that right after lunch, but I think
21 we'll need to have a time to talk.
22 CHAIRMAN BALLINGER: In that case, I
23 think it's a good time to adjourn until --
24 MEMBER SKILLMAN: Recess.
25 CHAIRMAN BALLINGER: -- recess, excuse

1 me, until 1:00.

2 (Whereupon, the above-entitled matter

3 went off the record at 11:52 a.m. and resumed at

4 1:01 p.m.)

5 CHAIRMAN BALLINGER: Okay. We're back

6 in session.

7 MEMBER POWERS: Is that like back in

8 the saddle?

9 CHAIRMAN BALLINGER: Yes.

10 MEMBER POWERS: Back in the saddle

11 again.

12 CHAIRMAN BALLINGER: You better keep

13 going before this gets out of control here. More

14 out of control.

15 (Laughter.)

16 CHAIRMAN BALLINGER: We're losing

17 something in the translation.

18 Okay. Let's continue.

19 MR. MINSEOK KIM: For this section

20 there are three open items in SER. Question 5.2.2

21 there were four sub-items, among them sub-item No.

22 B and C regarding the LTOP. It was requested to

23 provide the description of the LTOP analysis and

24 provide (inaudible) result including the maximum

25 (inaudible). KHNP responded on this date, but the

1 follow-up RAI was issued. The number was --
2 question number was 5.2.2-7. Provide the
3 description about LTOP analysis methodology in
4 parameters and solutions. KHNP responded that
5 describe description about detailed methodology in
6 parameters and solutions. And why these include
7 (inaudible) solution are suitability conservative.
8 CHAIRMAN BALLINGER: We have a question
9 that's from a member that's not here, Dr. Corradini
10 on this topic. And he was -- I have his written
11 comment. It says regarding the over-pressure
12 protection relief during the LTOP transient. This
13 on the open item. With regard to the energy input
14 assumptions the staff issued this RAI, and the
15 question, to address whether the energy inputs were
16 conservative and how the RCS conditions for this
17 transient were calculated.
18 He said please ask the staff or the
19 applicant to explain what is uncertain about the
20 energy input that is missing in the application.
21 That's a question from him. Apparently there was
22 some writing about the uncertainty in the relief
23 valve setting and the energy input.
24 MR. SISK: This is Rob Sisk,
25 Westinghouse. I think we -- Tae Han?

1 MR. TAE HAN KIM: This is Tae Han Kim
2 from KEPCO E&C. The LTOP valve were basically
3 evaluated for worst case, this addition and energy
4 addition, so we calculated addition from the
5 (inaudible) different temperature from primary to
6 secondary side. But I'm not fully understand
7 what's the uncertainty question.
8 CHAIRMAN BALLINGER: I think Member
9 Skillman would know this better, but during that
10 transient you're very close to solid. And so a
11 very small change in input can make a very large
12 change in pressure. And so the question was how is
13 the uncertainty in that addition calculated?
14 MEMBER STETKAR: Ron, why don't we wait
15 until the staff comes up?
16 CHAIRMAN BALLINGER: Okay.
17 MEMBER STETKAR: Because I have a
18 question --
19 CHAIRMAN BALLINGER: You had a question
20 about that, too?
21 MEMBER STETKAR: -- about that also.
22 CHAIRMAN BALLINGER: Okay. All right.
23 MEMBER STETKAR: And I wanted to --
24 (Simultaneous speaking.)
25 CHAIRMAN BALLINGER: All right. We'll

1 wait for the staff.

2 MEMBER STETKAR: I think it's better

3 for the staff.

4 CHAIRMAN BALLINGER: Okay.

5 MR. MINSEOK KIM: Go on? The third

6 item was to address the difference between the pre-

7 serve testing in DCD Section 5.2 and Chapter 14

8 test for pressurizer POSRVs. KHNP revised test

9 plans in Section 14.2 to describe the complete pre-

10 service testing for pressurizer POSRVs.

11 Okay. I'll turn over to Mr. --

12 MEMBER STETKAR: Let me ask you one

13 question about the POSRVs. Are the APR1400 POSRVs

14 rated for water relief? In other words, if they

15 open under water relief, will they reseat?

16 MR. MINSEOK KIM: Both water and steam?

17 MEMBER STETKAR: Sub-cooled. I'm

18 talking about sub-cooled water relief, so that if I

19 fill the pressurizer full of water during a

20 transient will they reseat or will they stick open?

21 When I say "stick open," I don't necessarily mean

22 stick fully open. I mean chatter or --

23 MR. TAE HAN KIM: Tae Han Kim again.

24 With POSRV when we gave our procurement spec, we

25 are required to qualify for both steam and hot

water.

MEMBER STETKAR: You will require steam and water?

MR. TAE HAN KIM: Yes.

MEMBER STETKAR: Thank you. Is that -- while I have you here, is that -- does that also apply for the main steam safety valves? Are they qualified for water relief or only steam?

(No audible response.)

MEMBER STETKAR: I see shaking of heads.

MR. TAE HAN KIM: I think this is different.

MEMBER STETKAR: So are main steam safety valves only steam relief?

MR. TAE HAN KIM: Yes.

MEMBER STETKAR: Thank you. That helps me later on when I review PRA things. It doesn't have to do anything with what we're talking about today. Thank you.

MR. MINSEOK KIM: Can you move onto third (inaudible)?

MR. JONGSOO KIM: Good afternoon, ladies and gentlemen. My name is Jongsoo Kim, KHNP.

1 This is Section 5.2.3, Reactor Coolant
2 Pressure Boundary Materials. All the reactor --
3 RCPB material specification and selections complied
4 with ASME Section III NB requirements and Reg Guide
5 1.84.
6 Low-alloy steel and carbon-steel. RCS
7 main components fabricates the low-alloy steel or
8 carbon-steel or austenitic stainless steel
9 cladding. Cladding is in accordance with Reg Guide
10 1.43 and fracture toughness properties also meet 10
11 CFR 50 requirements. And $RT_{NDT}$ is 10 degree
12 Fahrenheit maximum for RCPB and minus 10 degree
13 maximum for (inaudible) belt line materials. To
14 reduce the neutron embrittlement effects of
15 (inaudible) materials the chemical elements are
16 controlled. The major structural materials are SA-
17 508 Grade 3 Class 1, or 508 Grade 1A.
18 MEMBER POWERS: May I ask what steps
19 you will take to ensure you don't run into the
20 kinds of problems they had with the Doral pressure
21 vessel?
22 MR. TAE HAN KIM: I'm sorry. I --
23 MEMBER POWERS: On the Doral pressure
24 vessel with hydrogen blisters in it.
25 MR. MICHAEL LEE: I'm sorry, Dana. Can

1 you ask the question --

2 MEMBER POWERS: Well, what steps will

3 you take to assure that the forgings don't suffer

4 from the same problems of the pressure vessel at

5 the Doral Plant in Belgium? It seems we have to do

6 a little more than just specify the chemical

7 composition.

8 MR. JONGSOO KIM: Well, as far as I

9 know, the (inaudible) pressure (inaudible) in Korea

10 made from the ring forging and with the

11 requirements of ASME III requirements and with

12 additional and examination. Yes, which is only

13 examination with more, yes, method.

14 MEMBER POWERS: Well, of course that's

15 exactly what the people at Doral did and

16 subsequently found out with better ultrasonics that

17 they had these quarter-sized flaws throughout their

18 vessel. And one particular one of the rings, they

19 go to make up the overall forging. And so it

20 appears they're just saying good forging practices

21 is not good enough now.

22 MR. SISK: Yes, Rob Sisk, Westinghouse.

23 I will say that; as you know I'll make the generic

24 statement because I think it's important, we do the

25 -- monitor the operating experiences that we're

1 seeing across the fleet and the Doral experience
2 and how that applies to experience in Korea, but
3 now we're looking at a certified design, how we're
4 assuring that that's not into a -- something that
5 is --
6 MEMBER POWERS: Well, as far as we know
7 --
8 MR. SISK: -- acceptable.
9 MEMBER POWERS: -- it seems to be a
10 peculiarity of the Rotterdam forging practices, but
11 it's not the only one. We had a problem with a
12 French steam generator. Same thing. And what it
13 says -- I mean, this is all hydrogen dissolution
14 into the steel and an insufficient annealing time
15 somehow. And so what do you do to make sure you
16 don't get that problem?
17 MR. SISK: We're going to have to look
18 into that in more detail.
19 MEMBER POWERS: I mean, I think my
20 point is it's not evident to me that a chemical
21 control is sufficient anymore for specifying
22 forgings with low-alloy steels.
23 CHAIRMAN BALLINGER: To make it clear,
24 it's possible to meet the toughness specifications,
25 impact specifications and have this problem.

1 MR. MICHAEL LEE: I think we understand
2 the comment and we will be looking to make sure
3 that is addressed in our operating experience
4 evaluations to make sure that if there is something
5 that we can learn from that to enhance APR1400 --
6 (Simultaneous speaking.)
7 MEMBER POWERS: Yes, well, I mean, I
8 think it's combatable because this problem of
9 hydrogen was recognized back in the '50s and
10 protocols were arranged to -- on the annealing to
11 get rid of it, but manifestly they didn't work all
12 the time. And I don't know whether it's just a
13 failing at adherence or it's -- something more
14 needs to be done, obviously.
15 MEMBER RICCARDELLA: I would suggest
16 that a big part of that problem was the change in
17 the ultrasonic techniques that we used way back in
18 those days when those were built versus the
19 ultrasonic techniques now. And I'm assuming that
20 you guys would be using the state-of-the-art
21 ultrasonic inspection --
22 (Simultaneous speaking.)
23 MEMBER POWERS: Well, I wouldn't assume
24 anything.
25 MEMBER RICCARDELLA: No.

1 MR. MICHAEL LEE: We're doing it. I
2 think it's again something we need to be tracking,
3 and appreciate the comment.
4 MEMBER POWERS: Yes, somebody's going
5 to ask you if I don't.
6 MR. JONGSOO KIM: Austenitic stainless
7 steel. Austenitic stainless steel is controlled
8 not to use to -- of sensitized stainless steel. So
9 solution annealed condition and just carbon
10 contents are applied. Cold worked and cobalt
11 contents also controlled.
12 Nickel-chromium-iron alloys. Only
13 Alloy 690 is used for nickel-based alloy. In
14 addition to ASME Code requirements we incorporate
15 the state-of-art industry requirements of EPRI
16 document.
17 CHAIRMAN BALLINGER: I have a question.
18 Back up to austenitic stainless steel. It just
19 dawned on me -- yes, less than 0.065 percent or L-
20 grade. Those are two different things. The
21 specification on L-grade is less than 0.04. So L-
22 grade would be 0.04 or less carbon. 0.065 is not
23 L-grade. It's much higher. And so the welding
24 procedures for something that uses 0.065 for the
25 carbon filler metal would be different, way

1 different than using L-grade with respect to
2 sensitization. So those two numbers to me are not
3 -- I don't know. They don't make any sense
4 together. Am I making myself clear?
5 (No audible response.)
6 CHAIRMAN BALLINGER: So reduce carbon
7 content of base metals. Okay. To me that says
8 maybe L-grade. I don't know. And weld materials.
9 So less than 0.065 is standard stainless steel
10 grade because that's from 0.04 to -- 0.08 is the
11 maximum number down to 0.04, which is the L-grade.
12 And then it says or L-grade, which would be 0.04 or
13 less.
14 MR. JONGSOO KIM: Yes, we use L-grade
15 for welding materials, austenitic stainless steel
16 welding material. However, for the base material
17 we applied maximum carbon content of 0.065 percent.
18 That's not L-grade. But in some components I will
19 talk later, but in this slide the surge lines were
20 safe and we used L-grade. And for the surge line
21 we use (inaudible) stabilized stainless steel. And
22 we -- for the -- yes.
23 CHAIRMAN BALLINGER: Okay. And again,
24 for weld materials L-grade -- since you're using a
25 filler metal that's a duplex, I'm not sure the L-

grade means much. In other words, if you have a ferrite number that has to be within -- above five, or I forget. Pete would know the number better than I. I think it's greater than five or seven for a ferrite number of something.

PARTICIPANT: I'm not a metallurgist.

CHAIRMAN BALLINGER: Okay. Take my word for it. It's above five, right?

MR. JONGSOO KIM: Yes.

CHAIRMAN BALLINGER: So you're using a duplex material, so L -- there's no L-grade, there's no 308L, I don't think. So it's just confusing. It's just -- I understand a little bit better now, but low -- reduced carbon would be -- 0.065 would be reduced carbon from the standard grade.

MR. JONGSOO KIM: Yes.

CHAIRMAN BALLINGER: But it wouldn't be L-grade.

MEMBER RICCARDELLA: I think the operative phrase here is the first bullet under nickel-chrome-iron, "control on chemistry and mechanical properties consistent with state-of-the-art industrial requirements," or "state-of-the-art industry -- nuclear industry requirements." And I

1 think that would apply to all your materials.
2 CHAIRMAN BALLINGER: Well, but that's
3 for -- okay.
4 MEMBER RICCARDELLA: Yes, but I mean, I
5 think that would apply -- I mean --
6 CHAIRMAN BALLINGER: In fact nowadays
7 it's very difficult to actually buy 300-series
8 stainless steel that's not already L. Okay. Thank
9 you.
10 MR. JONGSOO KIM: Yes. Okay.
11 Testings. And identify the contents is limited to
12 prevent similar aging. For examples, 14 percent
13 maximum for CF8M. Comparability with reactor
14 coolant. RCS water chemistry of APR1400 complied
15 with up-to-date EPRI primary water chemistry
16 guidelines. And the impurity control of chloride
17 and fluoride in non-metallic insulation complied
18 with Reg Guide 1.36.
19 Fabrication and processing of ferritic
20 materials.
21 MEMBER STETKAR: Can I ask you; I read
22 that, where in the APR1400 inside the containment
23 do you use non-metallic insulation?
24 MR. JONGSOO KIM: The insulation is
25 used at the outside of the component, not inside --

1 MEMBER STETKAR: Inside the reactor
2 containment you have pumps and pipes and valves and
3 vessels.
4 MR. JONGSOO KIM: Yes.
5 MEMBER STETKAR: On the exterior of
6 many of the pumps and pipes and valves and vessels
7 you have insulation. On the exterior of some of
8 that you apparently have reflective metal
9 insulation. I know what that is. And apparently
10 some places you have non-metallic insulation. I'm
11 asking you where inside the containment you use
12 non-metallic insulation. Because this seems to
13 tell me that you use non-metallic insulation in
14 there. Otherwise, why does it say it complies with
15 Regulatory Guide? So I'm just curious where you
16 use it.
17 MR. MINSEOK KIM: The reactor --
18 Minseok Kim speaking. The reactor vessel
19 insulation uses reflective metal insulation.
20 MEMBER STETKAR: Good.
21 MR. MINSEOK KIM: But the -- for the
22 other components say inside the containment there -
23 - they can use non-metallic insulation.
24 MEMBER STETKAR: That includes the
25 reactor coolant loops?

1 MR. TAE HAN KIM: Sorry, sir. This is
2 Tae Han Kim from KEPCO E&C.
3 MEMBER STETKAR: Yes.
4 MR. TAE HAN KIM: We applied Korean
5 containment, so we tried the metallic insulation
6 inside the containment. But I will check again and
7 get back to you.
8 MEMBER STETKAR: I didn't catch the
9 last. What did you say at the end there?
10 MR. TAE HAN KIM: We use the metallic
11 insulation --
12 MEMBER STETKAR: Yes.
13 MR. TAE HAN KIM: -- inside the
14 containment.
15 MEMBER STETKAR: And is that for
16 everything? Does that include main steam lines and
17 main feedwater lines and --
18 MR. TAE HAN KIM: Yes.
19 MEMBER STETKAR: -- all of the reactor
20 coolant system?
21 MR. TAE HAN KIM: Yes, inside the
22 containment.
23 MEMBER STETKAR: Inside the
24 containment?
25 MR. TAE HAN KIM: Yes.

1 MEMBER STETKAR: Okay. That's what I
2 was trying to establish. Thank you very much.
3 MR. JONGSOO KIM: So fabrication and
4 processing of metallic materials. Ferritic
5 materials are controlled in fabrication and process
6 with ASME Code Rules and Regulatory Guides as
7 applicable. ASME Section III and IX are used for
8 qualification of welding procedure and personnel.
9 Pre-heat control for Reg Guide 1.50 and classing
10 procedure qualification for Reg Guide 1.43 and
11 welder qualification or limited (inaudible) for Reg
12 Guide 1.71 are also applied.
13 And fabrication and processing of
14 austenitic stainless steel. Austenitic stainless
15 steel also controlled in fabrication and processes
16 in order to avoid cracking or sensitizing. To
17 avoid stress corrosion cracking austenitic
18 stainless steel is supplied in solution and
19 (inaudible) condition and (inaudible) through a
20 specific temperature range. Cold working is
21 prohibited and on non-sensitization is conformed by
22 ASTM A262 Practice A or E corrosion test.
23 Welding of austenitic stainless steel
24 we comply with Reg Guide 1.44.
25 CHAIRMAN BALLINGER: Go back. A262

1 Practice A or E, these are immersion corrosion
2 tests. There's a whole list of them. I can see
3 using 262 for qualifying material used as received,
4 but I don't understand how you use 262 for an as-
5 welded structure. So I'd be curious to know a
6 little bit more information about how you use 262
7 for something that's welded already --
8 MR. JONGSOO KIM: Yes.
9 CHAIRMAN BALLINGER: -- to verify the
10 sensitization --
11 MR. JONGSOO KIM: Yes.
12 CHAIRMAN BALLINGER: -- non-
13 sensitization things. So that's a question that I
14 have.
15 MR. JONGSOO KIM: Yes, I will explain
16 using this the next parameter, using next
17 parameter. And welding of austenitic
18 stainless steel will comply with Reg Guide 1.44.
19 And delta ferrite contains in welding materials,
20 welding heat input and interpass temperature, and
21 carbon content are controlled for ensuring
22 integrity of weld heat affected zone and
23 (inaudible).
24 And finally, ASTM A262 Practice A or E
25 is used for ensuring non-sensitization. That means

1 the welding material is ensured by welding
2 qualification. During the welding qualification
3 process we complied
4 -- we tested the ASTM A262 practice. So we qualify
5 that -- that the welding material used in those
6 welding procedure would not be sensitized.
7 CHAIRMAN BALLINGER: Okay. But I'm
8 cautioning -- you're limiting your carbon to 0.065
9 or lower. Between 0.065 and 0.4 the response to
10 the same heat input to an A262 test will be
11 different, quite a bit different. So if you have
12 piping that varies in carbon content within your
13 specification, the response to the heat input that
14 -- above which you get sensitization is going to be
15 different. So it's -- I'm curious as when we talk
16 about quality control how that's going to be
17 assured.
18 MR. JONGSOO KIM: Yes, when we test the
19 (inaudible), for example, welding material, we do
20 sensitizing heat treatment. That means it's a
21 little bit different, the low-alloy -- low-carbon
22 stainless steel between the -- with the other --
23 the standard austenitic stainless steel. So we
24 first sensitized (inaudible) welding and then we
25 test the Practice A or E test.

1 MEMBER STETKAR: So is this a test
2 program prior to doing the actual welding? Am I
3 missing something?
4 MEMBER RICCARDELLA: I think he says
5 it's part of the welding procedure qualification.
6 CHAIRMAN BALLINGER: Okay. So they do
7 some --
8 MEMBER RICCARDELLA: Yes, the procedure
9 qualification, you run the test and you cover your
10 -- if the tests cover the range of possible carbon
11 contents in the materials, then those procedures --
12 CHAIRMAN BALLINGER: Yes. Yes. Okay.
13 MEMBER RICCARDELLA: -- will work in
14 the field.
15 CHAIRMAN BALLINGER: Thank you.
16 MR. JONGSOO KIM: Contamination control
17 is applied during the fabrication process. NQA-1
18 requirements are applied for cleanliness and clean
19 procedures. And cleaning water chemistry is also
20 controlled.
21 MEMBER POWERS: I'm not sure what it
22 means when you say "maintain cleanliness according
23 to NQA-1." NQA-1, as far as I know, doesn't say
24 anything about cleanliness.
25 MR. JONGSOO KIM: We (inaudible) by the

1 classification of the (inaudible) and there is a
2 requirement for the -- the (inaudible) requirements
3 applicable to the classification of cleanliness.
4 Yes.
5 MEMBER POWERS: So what is the
6 cleanliness requirement? I mean, you're using NQA-
7 1 to make sure that you're staying within your
8 specification, but I still don't know what the
9 cleanliness specification is.
10 MR. JONGSOO KIM: Yes, the cleanliness
11 specification is Class 1 (inaudible) 3, and those
12 requirements are in NQA-1, Subsection 3.2. There
13 should be -- there is applicable requirements how
14 to classify the cleanliness. And there is also
15 various requirements to that applicable requirement
16 of cleanliness.
17 MEMBER POWERS: Okay. So you specify
18 Cleanliness Category 1 and then you use NQA-1
19 processes to make sure that you're in compliance
20 with that specification is what you're saying?
21 MR. JONGSOO KIM: Yes.
22 MEMBER POWERS: Thank you.
23 MR. JONGSOO KIM: And there is one open
24 item in this section regarding DCD classification.
25 NRC concerns the integrity of welding material --

1 fabricated using control parameters specified in
2 DCD. The welding procedure specification of
3 austenitic stainless steel qualified with ASME
4 Section III and IX using those parameters specified
5 in the DCD such as maximum heat input, interpass
6 temperature and reduced carbon contents. In the
7 weld qualification process ASTM 262 Practice A or E
8 test is performed to issue the non-sensitization of
9 welding material and weld heat-affected-zone.
10 Since the product welding is to be
11 performed under a weld input, interpass temperature
12 and carbon content is less than the value allowed
13 by the qualified WPS, the weld metal and weld heat-
14 affected-zone will not be sensitized severely. And
15 we submitted RA response to NRC to resolve this
16 concern. The Section 5.2.4 describes
17 the in-service inspection and testing. ASME
18 Section XI and 10 CFR 50.55(a) are applied for pre-
19 service inspection and in-service inspection of
20 APR1400.
21 ISI program of 10-year interval will be
22 implemented. We prepare the PSI and ISI program
23 and submit through licensing body prior to
24 implementation of the code required examination.
25 And code case is complied with Reg Guide 1.147.

1 Inspectability. The components of
2 APR1400 will be designed to allow sufficient spaces
3 for examination with ASME Code Section XI IWA-1500.
4 And qualification.
5 MEMBER STETKAR: I have a question
6 about inspectability. In two places in the DCD you
7 indicate that the bottom head of the reactor vessel
8 is examined manually by removing insulation and
9 that you have an access tunnel down where it comes
10 in so that people can get down there to do those
11 inspections. Is it actually feasible for people to
12 go down there and perform those inspections
13 manually?
14 But I recall when I was at Zion; this
15 is many, many, many years ago, that the dose rates
16 were typically so high down there that people
17 essentially could not go there. So I was curious
18 of all of your inspection descriptions that one
19 raised a question with me in terms of how those
20 inspections would actually be performed. Because
21 everything else is underwater.
22 MR. JONGSOO KIM: We can go there.
23 MEMBER STETKAR: You can go there?
24 MR. JONGSOO KIM: Yes, we do.
25 MEMBER STETKAR: And you do that in

Korea? You actually go under and remove insulation and inspect the exterior of the bottom heads?

MR. JONGSOO KIM: Yes, we design the insulation with removable insulation.

MEMBER STETKAR: Yes, I understand it can be removed, but the dose rates are low enough that people can actually do that?

MR. JONGSOO KIM: Yes.

MEMBER STETKAR: Okay. Good. Okay. That's --

MR. JONGSOO KIM: And qualification. The qualifications of examination personnel, we comply with ASME Section XI, double A, 2300 and Appendix 7. Performance demonstration we -- with comply with ASME Section XI Appendix VIII, respectively. And the reactor pressure vessel head will be examined in accordance with Code Case N-729-1, modified with 10 CFR 50.55(a). And Boric Acid Corrosion Program will be also implemented in APR1400.

And now I will turn over to --

MR. MINSEOK KIM: 5.2.5, Reactor Coolant Pressure Boundary Leakage Detection. The RCPB leakage detection systems are designed in accordance with Regulatory Guide 1.29 and conforms

1 to 1.45. The sensitivity for unidentified leakage
2 can be discussed like this: 0.5 gpm can be
3 detected less than one hour. And the methods are
4 inventory, sump level and flow, containment air
5 particulate radioactivity monitoring, and an
6 acoustic leak monitoring system.
7 The definition of identified leakage is
8 accordance with the Reg Guide 1.45 captured/flow-
9 metered/conducted to collection, or collection
10 system, or leakage into the containment atmosphere
11 from a known source and the leakage instrumentation
12 in the -- provided in the main control room.
13 No questions?
14 MR. JONGSOO KIM: Yes, Jongsoo Kim
15 again. Reactor vessel materials. This slide
16 describes the reactor vessel materials. This
17 figures show the reactor vessel of APR1400
18 schematically. And it will be fabricated in
19 accordance with ASME Section III basically, and
20 Section II for materials and Section V for NDE and
21 Section IX for welding will be applied. In various
22 records will also be met during the verifications.
23 And the reactor vessel consists of low-
24 allow steel or SA-508 Grade 3 Class 1 with
25 austenitic stainless steel cladding. And fraction

1 mechanics -- provisions of minus 10 degree
2 Fahrenheit or 10 degrees Fahrenheit of $RT_{NDT}$ values
3 are implemented to certify ASME Code and 10 CFR 50
4 Appendix G requirements. And CEDM nozzles and ICI
5 nozzles are main components of Alloy 690 materials
6 in reactor vessels. Reactor vessel material
7 program are provided with ASTME 185 and 10 CFR 50
8 Appendix H.
9 MR. CHOI: Seognam Choi speaking.
10 Section 5.3.2.1, Pressure-Temperature Limits. The
11 purpose of the making pressure-temperature limits
12 and of operating the plant following it is to
13 prevent the reactor vessel pressure boundary
14 materials from the non-ductile fracture during
15 heat-up and cool-down transients. This is based on
16 the requirement of Appendix G of 10 CFR 50 and
17 Appendix G of ASME Section XI. This P-T limit
18 curves are conservatively based on the end of life
19 of 60 years and the critical limiting sections such
20 as reactor vessel beltline, reactor vessel flange
21 and inlet, outlet nozzles.
22 This slide shows the typical P-T limit
23 curves for the end of life of 60 years. This curve
24 we made provide an acceptable range of operating
25 temperatures and pressure for heat-up, cool-down,

1 low-temperature overpressurizations and core
2 criticals and in-service leak and hydrostatic test
3 conditions. This these P-T limits curves are
4 adjusted periodically if necessary to stay within
5 the allowable stress limit during operation. The
6 detail informations and explanation of APR1400 is
7 reported to NRC. And these P-T limit curves is
8 also combined license items. It can be developed
9 based on the plant-specific data.
10 Pressurizer thermal shocks.
11 Pressurizer thermal shock events happened to the
12 pressurizer water reactor. That is the overcooling
13 of the reactor vessel will followed by the
14 immediately pressurization. $RT_{PTS}$ for evaluating
15 beltline values at the end of life are evaluated
16 and satisfy the screening criteria of 10 CFR 50.61.
17 On this slide each $RT_{PTS}$ values are well
18 below the screening criteria. Also this detail
19 information go to NRC. And then PTS is also core
20 items. It can be developed later based on the
21 plant-specific data.
22 Next. Upper-self energy. Upper-shelf
23 energy is also another requirement to have more
24 safety margin against non-ductile fracture by the
25 irradiation. And this is also regulated by the

1 Appendix G of 10 CFR 50 and (BTP) 5-3 of NRC
2 Standard Review Plans. And the change of the USE
3 can be predicated by the NRC Reg Guide 1.99. With
4 the initial limiting values of 75 foot-pounds the
5 estimated value of end-of-life USE for APR1400 is
6 to be about 51 foot-pounds, which is greater than
7 the limiting end-of-life values. It can be
8 developed later based on the plant-specific data.
9 MR. J. KIM: The Section 5.3.3 reactor
10 vessel written. This slide then with the vessel of
11 APR1400.
12 Then into which of this vessel is
13 ensured by using techniques, proven techniques and
14 well characterized materials by planned
15 experiences.
16 The structure into which the reactor
17 vessel is ensured by ASME Section 3 MB, material
18 certification vessels examination, the handling of
19 the reactor vessel comply with ASME codes and 10
20 CFR 50.
21 And, after initiation of power
22 operation, the reactor vessel into which it will be
23 issued by ISI program and the reactor vessel
24 surveillance program respectively.
25 MEMBER STETKAR: I have a question, you

1 didn't cover it here, but your Table 5.3-7
2 specifies a schedule for removal of the
3 surveillance capsules.
4 And, I was curious why the surveillance
5 capsules are not removed from symmetric locations
6 around the reactor vessel? In particular, why do
7 you remove capsules at locations 217 degrees and
8 224 degrees ANC rather than in the four removals,
9 have them symmetrically located around the vessel?
10 So, that must have been intentional,
11 so, why do you do that?
12 MR. J. KIM: The location is determined
13 high level of neutron fluence and those four --
14 those locations are the same -- but the same 40
15 degrees -- 45 degrees, it is the same, 45 degrees
16 is the same. So --
17 MEMBER STETKAR: I'm sorry, but they're
18 not. 217 degrees and 224 degrees, to me, are 7
19 degrees apart.
20 MR. J. KIM: Yes, they are symmetrical.
21 MEMBER STETKAR: If you look at Table
22 5.3-7, just look at Table 5.3-7. You are not
23 removing the four capsules from four symmetric
24 locations around the vessel. Just look at the
25 table and you see 217 degrees and 224 degrees which

1 are right next to one another.

2 So, my question is, if that's

3 intentional, why are you doing that? Your two

4 spares are not located 180 degrees apart around the

5 vessel as I would expect them to be. They're

6 located about a 100 degree apart.

7 So, my question is, if that is

8 intention? It that is what you are specifying for

9 the certified design, why, as a combined license

10 applicant must I follow this schedule? There must

11 be an intention. So, why is it?

12 MR. J. KIM: Yes, this --

13 MEMBER STETKAR: If it's an error, then

14 it's an error. But, if it's intentional, I want to

15 understand why it's intentional?

16 MR. J. KIM: Yes, this is no error and

17 this --

18 MEMBER STETKAR: It is not? Okay.

19 Why, then, do you have this particular removal

20 schedule?

21 MR. J. KIM: This location is, first

22 is, highest location is first.

23 MEMBER STETKAR: Let me try this again.

24 Do you expect the highest fluence to be

25 in the northeast corner of the plan view of the

1 reactor vessel shown in Figure 5.3-5? And, if so,
2 why is it there? As opposed to anywhere else
3 symmetrically around the reactor vessel?
4 MR. J. KIM: Basically, at this
5 location is symmetrical. We -- from the vertical
6 access, this is the 37 and 40, yes, 44 is -- those
7 locations are all symmetrical from here from here.
8 So, from (inaudible) from 35, 44 and
9 35, 44. And, this is minus 35 and 44.
10 MEMBER STETKAR: I'm not understanding
11 you. If I look at Figure 5.3-7, I'm sorry, Figure
12 5.3.-5, Figure 5.3-5, on the PDF files, it's page
13 149 on the PDF file or in the DCD, it's page 5.3-
14 54.
15 If I look at that picture, I see that
16 you are removing two of the four capsules at 217
17 and 224 degrees in the, what I would call, the
18 northeast corner of that picture.
19 And, I'm curious about why two of the
20 four are removed from there rather than removing
21 them symmetrically around the vessel of the four?
22 MEMBER REMPE: But, the table has like
23 six months, 18 months and so they're going --
24 MEMBER STETKAR: The table says I
25 remove four. I remove them from 217, 37, 224 and

323.

MR. J. KIM: How many places do you have the highest fluence points.

MEMBER STETKAR: And, if you expect the highest fluence to be in that northeast corner of the vessel, why do you expect it be?

I can understand if you expect the highest fluence to be there that you would selectively sample from that location. Why do you expect the highest fluence to be in that 217 to 224 degree area?

MR. J. KIM: From our -- this -- my understanding is that basically those areas are the highest point and specifically the sequence and I will check and the --

MEMBER STETKAR: Okay, I'd appreciate it if you'd check because I don't know what there is about the core that would indicate why I would selectively have two samples from that location out of the four over the whole life of the plant.

MR. J. KIM: Yes.

MEMBER STETKAR: In other words, why I would not symmetric -- over the life of the plant, why would not select samples from each of the four quadrants?

1 MR. J. KIM: Yes, yes, I will.
2 MEMBER STETKAR: Okay.
3 MR. J. KIM: Thank you.
4 MEMBER STETKAR: I'm not a materials
5 guy. I just would have expected that there would
6 be, over the life, you would have gone around the
7 vessel.
8 MR. SISK: Rob Sisk. What --
9 MEMBER STETKAR: Unless there's
10 something unique that would give me an indication
11 that I would expect to have higher fluence in that
12 particular area.
13 MR. SISK: So, just for clarification,
14 your expectation is that there would be samples
15 around or --
16 MEMBER STETKAR: My expectation would
17 be that there were samples that I would sample
18 from, I don't care about the sequence at the
19 moment, but 217, 323, 37 and 143, that would give
20 me samples in all four quadrants.
21 MR. SISK: Or are you looking for where
22 you get the highest radiation and, therefore,
23 you'll get the most conservative answer coming out
24 in sequence over time.
25 MEMBER STETKAR: And, if there's a

1 reason why you expect the highest fluence or the
2 highest --
3 MR. SISK: So, that's what you're
4 looking for?
5 MEMBER STETKAR: -- degradation at --
6 because, see, you're sampling from two that are
7 very close to one another.
8 MR. SISK: Yes, two here and two here
9 at different times.
10 MEMBER STETKAR: No, not just -- look
11 at the picture and look at the table. You can't
12 pull them up at the same time.
13 The sequence specifies that I remove
14 capsules, the sequence, at 217, 37, 224 and 323.
15 MR. SISK: That's correct.
16 MEMBER STETKAR: So, remover two
17 capsules that are located very close to one another
18 --
19 MR. SISK: and, close in time.
20 MEMBER STETKAR: -- and, well, I mean
21 not close in time, but --
22 MR. SISK: But, I mean --
23 MEMBER STETKAR: You, it's number one
24 is at 227, number two -- I'm sorry, number one is
25 at 217, number two is at 37, number three is at

1 224, which is close to number one and, number four
2 is at 323, which is roughly 90 degrees aware from
3 number one and three.
4 So, I only get one sample kind of in
5 the other two-thirds of the entire vessel over the
6 four years.
7 MR. SISK: I understand your --
8 MEMBER STETKAR: And, I don't -- it's
9 fine if I expect the highest fluence to be in that
10 area, I have it. But, I -- and, if it's
11 intentional, I'm just curious why the highest
12 fluence would be expected to be in that area?
13 CHAIRMAN BALLINGER: I mean, I'm
14 looking at Table 5.3.7 here.
15 MEMBER STETKAR: Yes.
16 CHAIRMAN BALLINGER: And, there's --
17 when it says target fluence, there's only one
18 capsule, D, which is the 323 at end of life which
19 would be probably 40 or 50 EFPH.
20 MEMBER STETKAR: That's their nominal
21 maximum targets.
22 CHAIRMAN BALLINGER: The EOL, right?
23 MEMBER STETKAR: Right.
24 CHAIRMAN BALLINGER: And, that's 6.44
25 times $10^{19}$. And, so, that's the end of life target

fluence. Maybe that's the highest fluence at the end of the life.

MEMBER RICCARDELLA: As I look at it, all six of the capsules are in the regions of high fluence.

CHAIRMAN BALLINGER: Yes, oh, yes.

MEMBER RICCARDELLA: They're all in the peak area.

CHAIRMAN BALLINGER: Yes.

MEMBER RICCARDELLA: And, I think it's somewhat random whether you pick them. They might be trying to duplicate --

MEMBER STETKAR: It was just curious to me why, if I was going to sample four, I wouldn't sample them from axis symmetric locations around the vessel. You know, why --

MR. Y. KIM: Yes, this is Yunho Kim.

MEMBER STETKAR: You have to -- if you're going to answer, you have to come up to the microphone.

MR. Y. KIM: This is Yunho Kim.

Usually, we have a loading pattern, impure loading pattern. We designed that, for each quadrant at the same angle, they have the same fluence. Right?

1 MEMBER STETKAR: Should be, I would
2 think so.
3 MR. Y. KIM: Yes, so, for, I think that
4 the lesser fluence should add to it. The highest
5 fluence point from each quadrant.
6 But, we don't have to select for each
7 quadrant in sequence, you don't have to because in
8 -- for each quadrant, you have the symmetrical --
9 MEMBER RICCARDELLA: Are you using it?
10 Are you using low leakage core design?
11 MR. Y. KIM: Yes. We have a low
12 leakage loading pattern.
13 Did that help you?
14 MEMBER STETKAR: I mean, in principle,
15 it shouldn't make any difference. In principle, it
16 shouldn't make any difference. It's just a
17 curiosity, if it doesn't make any difference, why
18 don't you pull samples from symmetric locations to
19 confirm that it didn't make any difference?
20 MEMBER RICCARDELLA: In three of the
21 four. Three of the four in symmetric locations.
22 MEMBER STETKAR: No, three of the --
23 I'm sorry, three of the four are within roughly a
24 one-third of the vessel, 217, 224 and 323 on your
25 figure is where three of the four come from.

1 MEMBER RICCARDELLA: But, they're also
2 pulling 37, right?
3 MEMBER STETKAR: They are pulling --
4 MEMBER RICCARDELLA: Yes, 37 is --
5 MEMBER STETKAR: Yes, they're pulling
6 37, but three of the four -- they're not pulling
7 anything from the --
8 MEMBER RICCARDELLA: The upper left
9 quadrant.
10 MEMBER STETKAR: -- the upper left.
11 MEMBER RICCARDELLA: There might be a -
12 - we need to -- this is --
13 MEMBER STETKAR: That's why I asked if
14 there a particular reason --
15 MEMBER RICCARDELLA: Yes.
16 MEMBER STETKAR: -- why they're
17 focusing on that area. If there isn't then, then
18 okay.
19 MEMBER REMPE: Have you see other ones
20 and do they always -- for other plants, have they
21 rotated around or do they use the data from the
22 second one because they're doing calculation and
23 they're trying to say, well, I want a nearby
24 location to see how good my model is predicting?
25 I don't know how --

1 MEMBER STETKAR: I don't know.

2 MEMBER REMPE: -- that's what I was --

3 MEMBER STETKAR: I don't know. I don't

4 know, it's just -- I'm sorry. I'm almost sorry I

5 brought it up, but I was just really curious.

6 MR. M. KIM: Can I proceed?

7 There's a list of parameters of the

8 coolant pump. Before, I indicated ICPs are

9 vertical single stage bottom suction horizontal

10 discharge.

11 This is on the motor shaft provides

12 rotating the shaft for cooldown.

13 This figure shows the pump and the

14 rotating parts.

15 It is supplied and lock to its shaft,

16 pump alignment is maintained by a water lubricated

17 bearing. These other bearings is water lubricated

18 and the radial thrust bearings in the motor shaft,

19 these are oil lubricated.

20 Pump and motor is collected by a

21 coupling.

22 And, in the April meeting, there was a

23 question about the inspections, motor inspections.

24 For the rotor inspections, the motor has to be

25 removed and the thrust bearing has to be removed,

motor stand also removed.

For seal changes, remove the coupling and the reason the coupling is on, and thrust bearing is slightly lifted and then some space is here around the rigid coupling. And, the seal assembly can be -- can put outside for inspection or change.

There was another question for high pressure cooler. They are normally cooled by two ways in the system. One is the seal injection from CVCS and number two is the high pressure cooler.

The seal injection water is combined with a recirculation flow at the jet pump and is injected to the seals through the high pressure cooler.

Note that the recirculation flow, not only the emergency condition when injection is lost, but during normal operation, the recirculation of flow is required. And, the CCW cools the separation flow.

Another question was the seal -- seal design is different from the existing plant. The function and geometry is the same but the motors are improved.

For the long-term exposure up to high

1 temperature and pressure environment for the -- I'm
2 saying the difference is more clear. The
3 difference between the previous plants and the
4 APR1400 and this application design.
5 And, a test was done and the test
6 results demonstrated the ability of the seal to
7 survive an extended SEVU event.
8 There is an open item for the seal --
9 regarding injection and seals.
10 Section Number 5.4, two, Part I was to
11 clarify regarding what condition during a 30 minute
12 period. Thirty minutes in low flow CCW.
13 ICP seal injection is supplied by one
14 of the two charging pumps and when the charging
15 pumps are not available, the auxiliary charging
16 pump can supply the steam injection to the ICPs.
17 And, in the response KHMP provided a
18 description that the charging pumps and the
19 auxiliary charging pumps are not directly impacted
20 by a low flow CCW because the charging pump motor
21 is air cooled.
22 MEMBER STETKAR: I'm sorry, the
23 auxiliary charging pump motor is air cooled, is
24 that correct?
25 MR. M. KIM: That is correct.

1 MEMBER STETKAR: Does the centrifugal
2 charging pump require component cooling water?
3 MR. M. KIM: In this design, ARP1400
4 DCD application and air cooled motor is supplied
5 and the charging pump has -- the charging pump
6 mini-flow heat exchanger and the CCW is required.
7 But, the (inaudible) is served, it was
8 not affected by the loss of CCW. The effects of
9 the low CCW is not directly affected to the pump
10 operation.
11 MEMBER STETKAR: So, you will have, if
12 I lose all CCW the centrifugal charging pumps will
13 continue to operate with no problem forever, is
14 that true?
15 MR. M. KIM: The point is --
16 MEMBER STETKAR: No, I'm asking you a
17 specific question. If I lose CCW, will the
18 centrifugal charging pumps continue to operate with
19 no problem forever? And, what I mean forever, I
20 mean at least 24 hours.
21 MR. T. KIM: Yes, this is Tea Han Kim
22 from KEPCO E&C.
23 Yes, we can run --
24 MEMBER STETKAR: Thank you.
25 MR. T. KIM: -- charging pump.

1 MEMBER STETKAR: We have that on the
2 record.
3 Now, so, I understand if I lose CCW, I
4 still have seal injection flow from the centrifugal
5 charging pumps. So, I do not interrupt seal
6 injection flow.
7 You now say that the reactor coolant
8 pump can continue to run for at least 30 minutes
9 with no damage.
10 MR. M. KIM: Ten minutes.
11 MEMBER STETKAR: I'm sorry, this says
12 30 minutes.
13 MR. M. KIM: Thirty minutes means the
14 no impact.
15 MEMBER STETKAR: Well, okay. Then,
16 where's the ten minutes? The ten minutes --
17 MR. M. KIM: It's not in the DCD --
18 MEMBER STETKAR: It's not in the DCD,
19 is it? Where is -- what does -- you said ten
20 minutes, so I want to understand what the ten
21 minutes is.
22 MR. M. KIM: The difference is --
23 MEMBER STETKAR: If I -- so, let's now
24 talk -- I lose all component cooling water, seal
25 injection remains available because it stays

1 available. How much time do the operators have
2 before they must trip the reactor coolant pump
3 before I have damage to either the pump or its
4 seals?
5 MR. M. KIM: The seal is okay. The
6 bearing -- the pump and motor are oil bearing.
7 MEMBER STETKAR: Okay.
8 MR. M. KIM: Yes, it's limited, it has
9 a limit of 30 minutes to affect.
10 MEMBER STETKAR: Okay.
11 MR. M. KIM: It is described in Section
12 5.012.
13 MEMBER STETKAR: Yes, yes, I read that.
14 So, that's 30 minutes. So, before it
15 basically seizes. But, you said something about
16 ten minutes just now, so what's the ten minutes?
17 MR. M. KIM: Ten minutes means if --
18 before ten minutes, the CCW is restored, there is
19 any -- there is no damage to --
20 MEMBER STETKAR: Right, okay. But, I
21 don't restore CCW in ten minutes. CCW never comes
22 back, it's gone forever, what's the ten minutes
23 then? What happens after ten minutes?
24 MR. M. KIM: The bearing may be
25 damaged, but there is no effect to on the crossed

1 down characteristic.

2 MEMBER STETKAR: What about the seals?

3 MR. M. KIM: The seal is okay. The

4 seal is okay for indefinite time, forever.

5 MEMBER STETKAR: Okay. I've asked many

6 pump manufacturers this question and they always

7 have told me they do not know how long the seals

8 will last once the pump starts to vibrate

9 significantly. And, I'm talking now about

10 mechanical damage to the seals because the

11 clearances are typically not very large.

12 So, as I start to get shaft vibrations,

13 I can get rubbing on those intermediate seals and

14 they can start to leak.

15 MR. M. KIM: What is the exact

16 conditions? Seal injection is available or not?

17 MEMBER STETKAR: Seal -- even with seal

18 injection available, I've asked other pump

19 manufacturers this question and they can never give

20 me an answer to what -- some of them say maybe five

21 minutes, some of them say maybe ten minutes.

22 But, they've never been able to tell me

23 much longer than that period that they will assert,

24 I don't want to use guarantee because they never

25 use that word. But, they will say that I will not

have seal damage.

And, I'm talking now mechanical damage, not hydraulic or thermal damage.

MR. M. KIM: So, if I just mentioned it contained in the DCD, 30 minutes is -- operational, 30 minutes is possible if the seal injection is available.

MEMBER STETKAR: Okay, let me --

CHAIRMAN BALLINGER: I think what he's saying is, let me -- the pump is running.

MEMBER STETKAR: Yes.

CHAIRMAN BALLINGER: Something happens to the pump.

MEMBER STETKAR: Nope.

CHAIRMAN BALLINGER: Which causes the imbalance of some kind.

MEMBER STETKAR: Nope.

CHAIRMAN BALLINGER: No?

MEMBER STETKAR: The component cooling water goes away. I stop cooling every single bearing on that pump. I've stopped cooling the oil --

CHAIRMAN BALLINGER: Right.

MEMBER STETKAR: -- I've stopped -- okay.

1 CHAIRMAN BALLINGER: So, the bearing
2 dies.
3 MEMBER STETKAR: The bearing starts to
4 -- the oil starts to heat up for the bearing.
5 MR. M. KIM: The temperature bearing
6 and recoil is increasing.
7 MEMBER STETKAR: But, now, on most
8 things, before the bearings actually fail, I have
9 experience from this on a main turbine, you start
10 to get very increased vibrations because of the
11 viscosity of the oil gets pretty thing.
12 And, as the vibrations increase, there
13 may be a chance that you can have mechanical damage
14 to the seals.
15 MR. M. KIM: The APR1400 ICP has its
16 reference, the -- we have the OPR1000 plans
17 experience. And, the OPR1000 has referenced the
18 system. And, they conducted an analysis and tests
19 and three and four, conducted the full scale test.
20 MEMBER STETKAR: Okay. Well, when you
21 say test, did they actually cut off all cooling
22 water with a pump operating at rated reactor
23 coolant system temperature and pressure with seal
24 injection available to the seals and let the pump
25 run for 30 minutes and confirm that there was no

damage? Did they do that? Was that the test?

MR. M. KIM: Yes, that is discussed in DCD 5412.

MEMBER STETKAR: I'm sorry, I read the DCD and the DCD is very careful to say that the bearing damage after 30 minutes would not be so bad that you would seize the pump shaft.

MR. M. KIM: Yes, that's right.

MEMBER STETKAR: Before the pump shaft seizes, I'm going to have very high pump shaft vibration at some time before the pump shaft seizes, right? Or no? You have no pump shaft vibration?

MR. M. KIM: I didn't bring the test results here, but as I know, as far as I know, the limit is the bearing temperature, not the vibration for this test.

MEMBER STETKAR: I'm asking -- you know, we may be talking about different criteria here. I'm talking about how long can I let that pump run with no component cooling water with seal injection available before the operators must trip the pump because the seals can be damaged. And, if that's 30 minutes, that's fine, I understand that, but I would like to know what test has been

performed to confirm that.

Because I have asked that same question to several different other pump manufacturers over the last 25 years of my life and none of them know the answer to that question.

MR. M. KIM: Yes, and I should check the test results available and then --

MEMBER STETKAR: Yes.

MR. M. KIM: I hope then, tomorrow morning, I --

MEMBER STETKAR: That would be great. I mean, if you -- because that was my second question. If you actually have run tests on this pump to confirm that, that would be very, very, very useful.

CHAIRMAN BALLINGER: That's an action item.

MEMBER STETKAR: But, it has to be a test at rated system temperature and pressure to ensure -- because I'm looking for seal damage. I'm not looking for seizure of the shaft. I'm not looking for bearing damage that's so bad that the pump -- the reactor coolant pump is somehow other damaged. I'm strictly looking at possible mechanical damage to the seals.

1 MR. SISK: So, Rob Sisk, Westinghouse.
2 Just, again, clarification on what you
3 just said. You're not raising a safety concern,
4 you're looking at it from more of equipment
5 reliability or equipment --
6 MEMBER STETKAR: No, heck, I'm raising
7 a reactor coolant pump seal LOCA concern and what
8 is the time window available for the operators to
9 manually trip the reactor coolant pumps after loss
10 of component cooling water which is a risk
11 assessment question and it's also a potential seal
12 LOCA question. So, that's what I'm asking about.
13 Because there's a time window and any
14 other pump manufacturer I've ever asked the
15 question has come up with maybe ten minutes which
16 was why I was curious about when you said ten
17 minutes.
18 Some other pump manufacturers wouldn't
19 tell me any more than five minutes.
20 MR. M. KIM: I believe that the --
21 during the 30 minutes, the temperature limit was
22 not -- the test is under the limit and there was no
23 --
24 MEMBER STETKAR: I mean, that would be
25 -- in principle, you could do that. If you have a

1 huge oil reservoir with really good heat transfer,
2 I can see how it can be done. I've just never seen
3 it yet, so that's why I'm asking you if you have
4 test available, it'd be great.
5 MR. M. KIM: I cannot show the test
6 results here.
7 MEMBER STETKAR: Yes, I mean I
8 understand, everything is proprietary, but, just
9 make sure that we get the relevant information.
10 MR. M. KIM: I check and make an answer
11 tomorrow.
12 MEMBER STETKAR: Thank you, thank you,
13 thank you.
14 MEMBER SUNSERI: I have a question on
15 this slide regarding the auxiliary charging pump.
16 And, the experience in the U.S. with positive
17 displacement charging pumps is that they are not
18 very reliable, seal failures, high vibration.
19 And, as a consequence of that, many
20 plants in the United States have either eliminated
21 the use of positive displacement charging pumps or
22 significantly restrict their usage time so that
23 they can be available, you know, at the moment
24 they're absolutely needed.
25 So, my question for you is, what is the

basis for having a positive displacement auxiliary charging pump and what benefit do you expect to gain from that?

MR. T. KIM: This is Tae Han Kim from KEPCO E&C.

The first, we use the is put in the auxiliary charging pump, the main purpose of that one is the we have to utilize that one for hydro test for that is a very high pressure. So, that kind of high pressure can be obtain easily from that kind of pump.

MEMBER SUNSERI: Right.

MR. T. KIM: So, that is one of the main purpose we're using that. And, also, we're using the charging -- main charging pump as a centrifuge, so there's another type.

And, also, this -- the auxiliary charging pumps, so it's not already running so it is for emergency case also we can use some limited time for operation.

MEMBER SUNSERI: Okay. So, I understand you said two basic reasons.

One is, it provides the head necessary to do the hydro which I understand that. U.S. plants bring in a temporary pump to do that since

1 it's done only once every ten years or so.
2 And, then, the other reason is because
3 of diversity. You want something different than a
4 charging -- a centrifugal charging pump.
5 Is that -- did I understand that
6 correctly?
7 MR. T. KIM: Yes.
8 MEMBER SUNSERI: Okay, thank you.
9 MEMBER STETKAR: There are plants, I
10 was surprise when I started working in Switzerland,
11 this was, again, one plant that I've worked at uses
12 only centrifugal, or I'm sorry, only positive
13 displacement charging pumps and they don't -- they
14 haven't had any problems with them.
15 I mean, it's a different -- apparently,
16 some people make really good positive displacement
17 pumps.
18 MEMBER SUNSERI: They're probably built
19 like a Swiss watch.
20 MEMBER STETKAR: Yes, they --
21 MEMBER SUNSERI: We can make it work,
22 but the effort it took to do that was not worth the
23 benefit.
24 MEMBER STETKAR: No, it's -- but, I
25 know that there are plants who routinely do use

positive displacement, you know, 24/7, 365 days a year for charging and, you know, haven't had the problems that we've had at some plants in the U.S. with them.

MR. M. KIM: Okay, the second part was regarding the seal test results discussed in the previous slide.

In the response, the seal test available to staff audit and the general summary of the test is incorporated into DCD Section 5.4.12.

Finally, on the chapter of motor and, as you can see in the figure, it has cylindrical shrink feet of the outer to the hull and then cortical shrink feet between the hull and the shaft.

The fly motor is 26 meter chrome molybdenum vanadium 14-5, a German motor. And, the first toughness K1c value is higher than 165 nanopascal to meter or 150 KSI or two-inch.

The technical report fly integrity provides a description for the fly design.

There are six open items for flywheel and these are follow up questions for the question number one through six.

The open items are question number 7

1 through 12.

2 To describe objectable approaching for
3 determining fractal toughness of the fly motor in
4 the response to this question, we specified the
5 directness of determining fractal toughness in the
6 test is being done and the test report will be
7 available by November.

8 Question number eight is to clarify
9 operating experience table. In the previous
10 response to the previous question, there were some
11 extra items.

12 For example, there was some spells not
13 relevant to the operating experience. So, KHMP
14 revised the operating experience table with the
15 same tier and used the Korean and German plants
16 and, of course, including other countries.

17 Question number nine, to apply ACP
18 fly's test limit or one sort of the user strength
19 of the motor will provide technical justification
20 for use of one-third of alternate strength.

21 In the response, the ACP fly stress
22 limit of one-third of the yield strength of the
23 material according to the SRP and the -- it depends
24 on the test result of both the yield strength value
25 and the fractal toughness data.

1 Question number ten, to revise the
2 technical report include on analysis of hull and
3 provide appropriate fatigue crack growth rates.
4 The technical report will be revised to
5 add a separate stress probe of the hull.
6 Question number 11, to specify maximum
7 flow size as the acceptance criteria. So, in the
8 response to this question, revised DCD subsystem to
9 include the inspection as criteria.
10 Number 12, test and inspection proposed
11 for the fly also applies to the hull.
12 In the picture, the hull has all
13 channels that will make it difficult to preform
14 ultrasonic inspection flow, but flow propagation
15 will be show as negligible.
16 As addition defense in depth notation,
17 on PT or NT is proposed in the response. PT or OMT
18 on the hull.
19 If you don't have questions --
20 MEMBER RICCARDELLA: Yes, I actually
21 have a question. I've actually done some flywheel
22 burst analyses in my career.
23 One of the things that made it
24 difficult to address in U.S. plants was the
25 flywheel was keyed onto the shaft and the key

weight presented a stress concentration.

This figure that you showed doesn't show a key. Is there a key way in the flywheel?

MR. M. KIM: That was one of the questions in the previous RAI and there is no key in the actual design.

MEMBER RICCARDELLA: Good, thank you.

MR. M. KIM: I turn it over Mr. Choi.

MR. CHOI: Seognam Choi speaking.

This is a stream generators.

Two steam generators are designed into APR1400. This steam generator is a vertical U2 lead circulation type of heat exchanger with 13,102 tubes of alloy 690 thermal ETTD materials. And, with the integral economizer and 10 percent marginal, the heat transfer area for tube pluggings.

This has also three types of tube support such as horizontal grade, vertical and diagonal support.

And, this slide shows the steam generators of APR1400 shippings with Barca of United Arab Emirates.

We have only one obstacle remaining related to the steam generator program. The

1 question is the weakest, first, to change the
2 operating number.
3 And, second, is the clarifications of
4 inconsistencies of the proposed leakage barrier
5 within technical specifications and Chapter 15 of
6 DCD.
7 We submit the answer at June 16th this
8 year and we believe this RAI will be acceptable
9 because we correct the inconsistencies as
10 requested.
11 MEMBER REMPE: So, just to make clear,
12 if I read this new graph, it implies to me that, in
13 Chapter 15, you did use .6 gallons per minute in
14 your Chapter 15 analysis?
15 MR. CHOI: Yes.
16 MEMBER REMPE: Okay, good. Thank you.
17 CHAIRMAN BALLINGER: I have a sort of
18 general question about the steam generator,
19 especially the tubing.
20 I'm sure you're aware of what happened
21 at San Onofre, their large steam generators like
22 these, 690 tubing and they had a case where one
23 plant had excessive wear and leakage eventually.
24 And, the other plant had the same
25 tubing with nominally the same exact construction,

1 but didn't.

2 And, they traced that, at least if my

3 memory serves, to slight differences in the way the

4 surfaces were treated on the tubes and the

5 clearance between the AVBs in the upper part of the

6 section.

7 And, so, those steam generators were

8 nominally manufactured in exactly the same way, but

9 yet, that small difference made a huge -- had a

10 huge effect.

11 Now, you -- in the DCD and everything,

12 there's a fairly large discussion of that issue.

13 But, I still come down to asking the question of,

14 given the fact that -- how are we going to -- how

15 are you going to be sure that that problem with

16 that similar that happened to the San Onofre steam

17 generators doesn't happen here, given the fact that

18 just the small difference within a specification

19 for fabricating the steam generators made a huge

20 difference?

21 In other words, what --

22 MR. CHOI: I'm not sure the differences

23 of San Onofre or our APR1400. And, then, the --

24 San Onofre manufacture ways that same manufacturer

25 of the APR1400.

1 MEMBER BALLINGER: No, no, that's for
2 sure. That's not the point. The point is, is that
3 in spite of the fact that whoever manufactured the
4 steam generators, we know who they were, they were
5 manufactured to the same specifications, I presume.
6 And, yet, they had excessive wear in
7 one and not excessive wear in the other. And, so,
8 my question is -- and, these are in the upper
9 bundle where the AVBs are, irrespective of what's
10 down below with the egg crates and things like
11 that. So, that's different.
12 But, how are we -- how are you going to
13 assure that that problem doesn't -- is not -- well,
14 very unlikely to exist in these steam generators?
15 Because they are roughly the same size, same
16 tubing.
17 I don't know what the ABV material is,
18 the egg crate material is a 409 or something
19 stainless steel. But, I don't know what the -- I
20 forget what the AVB material is.
21 MEMBER RICCARDELLA: Let me just, I
22 mean, the problem was fluid elastic instability.
23 CHAIRMAN BALLINGER: Yes.
24 MEMBER RICCARDELLA: And, what could
25 you tell us to give us some confidence that we

1 don't have a fluid elastic instability problem in
2 these steam generators which are of --
3 I mean, I know there's a couple of
4 paragraphs in the DCD about it, but, in terms of
5 testing and experience, I mean, are these similar
6 to the OPR1000 steam generators? Are they larger?
7 Just some discussion of that would be helpful.
8 MR. CHOI: Yes, there is a two
9 improvement of the steam generator design.
10 The first one is that we designed it
11 going central regions and there's high flow regions
12 and we blocked in the flow.
13 The egg crate flow, this plate is added
14 center of regions.
15 And, the second one is the vertical
16 horizontal central lines have the one more -- or
17 one or two more vertical supports added. And, that
18 is the main improvement of the APR1000.
19 CHAIRMAN BALLINGER: That's right.
20 MR. CHOI: Yes.
21 CHAIRMAN BALLINGER: But, according --
22 the analysis that you're doing is a computer
23 analysis to predict fluid elastic instability.
24 They did the same thing, I think, for the other
25 steam generators and the CFD people will claim that

1 they can cure pattern baldness with their CFD code,
2 but, the fact of the matter is, they can't.
3 MEMBER RICCARDELLA: Well, but, I mean
4 there are successful steam generators of this size
5 operating. Palo Verde's a case in point.
6 I think, you know, it comes down to
7 operating experience and test data.
8 CHAIRMAN BALLINGER: So, again, it's
9 back to the test data. So, the design code, the
10 rules will say that if you suspect that you're
11 going to have an issue, you need to confirm that
12 you don't.
13 So, my question is, how are you going
14 to confirm that you don't?
15 MR. CHOI: As I said before, that
16 there's two improvement of the support and control
17 the chemicals and then I think so.
18 CHAIRMAN BALLINGER: Okay. So, you're
19 saying that those improvements are going to fix --
20 MR. CHOI: Yes.
21 CHAIRMAN BALLINGER: -- they're going
22 to ensure against the problem?
23 MEMBER SUNSERI: Let me ask the
24 question a little differently.
25 The codes you're using to design the

1 parameters inside the steam generators, the flows,
2 the thermal hydraulic characteristics, do you have
3 sufficient operating experience with those codes or
4 are any of the codes new and unique to this design
5 and being used for the first time?
6 MR. CHOI: Yes, and we use the same
7 EPRI code at those three.
8 MEMBER SUNSERI: You said EPRI codes?
9 MR. CHOI: Yes.
10 MEMBER SUNSERI: Okay.
11 CHAIRMAN BALLINGER: Thank you.
12 MEMBER RICCARDELLA: How much different
13 are these steam generators from the OPR1000 steam
14 generators?
15 MR. CHOI: Size?
16 MEMBER RICCARDELLA: Size, yes.
17 MR. CHOI: Yes, well, OPR is about --
18 total is 821 inches high and then this APR1400 is
19 905 inches tall.
20 MEMBER RICCARDELLA: A 100 inches
21 taller?
22 MR. CHOI: Yes. And, it's a bigger --
23 MEMBER RICCARDELLA: Bigger diameter?
24 MR. CHOI: Yes, the diameter is.
25 MEMBER RICCARDELLA: Yes, you mentioned

-- you didn't mention in the DCD that the tube support structure, the egg crate structure is the same?

MR. CHOI: Yes.

MEMBER REMPE: I'm sorry, maybe -- I know you asked about APR, but Shin-Kori's steam generators, are they the same as this plant's?

MR. CHOI: I'm sorry. Yes, there is increase the tube support over three maybe.

MEMBER RICCARDELLA: Okay, so --

MR. CHOI: It goes with these allow the tube size.

MEMBER REMPE: Okay. So, this will be different than Shin-Kori?

MR. CHOI: Yes.

MEMBER RICCARDELLA: Than Shin-Kori 3?

MR. CHOI: It's the same.

MEMBER RICCARDELLA: This is Shin-Kori 3?

MEMBER REMPE: It's the same as Shin-Kori 3, that's what I meant to say, the newer plants, so it's the same. And, you've manufactured those with Doosan --

MR. CHOI: Yes.

MEMBER REMPE: -- manufactures them?

1 MR. CHOI: Yes.
2 MEMBER REMPE: Okay.
3 MEMBER RICCARDELLA: So, if there's a
4 problem like San Onofre, we'll see it before --
5 right?
6 MEMBER SUNSERI: So (inaudible) three
7 back around.
8 CHAIRMAN BALLINGER: It's all the fault
9 of the metallurgist.
10 MEMBER RICCARDELLA: It's what?
11 CHAIRMAN BALLINGER: It's all the
12 metallurgist's fault.
13 MEMBER RICCARDELLA: Well, I mean, you
14 know, if you're operating close to an instability
15 point, you can see those kind of differences. If
16 you're operating, you know, well below the
17 instability point, then the small differences
18 probably won't make that much of a difference.
19 CHAIRMAN BALLINGER: But, if you don't
20 know that's you're close to the instability point -
21 -
22 MEMBER RICCARDELLA: Well, but I mean
23 they've done analysis and testing to say that
24 they're not close -- that they're well below the
25 instability point.

1 CHAIRMAN BALLINGER: I thought they
2 said they've done analysis, but I didn't read that
3 they'd done testing. Okay.
4 MR. T. KIM: Yes, 5.4.7 shutdown
5 cooling system. Shutdown cooling system is used to
6 reduce the temperature of the ICS from a hot
7 shutdown condition to refueling condition.
8 One of the design features of the
9 APR1400 is the shutdown cooling pumps and the
10 containment spray pumps are identical and
11 functionally interchangeable.
12 MEMBER STETKAR: Let me ask you a
13 couple of questions about this system before you go
14 to the RAI.
15 If I look at the drawings in the DCD,
16 in particular, Figures 5.4.7-3 which shows the
17 shutdown cooling system as shown here, or Figure
18 6.3.2-1 which shows more detail of safety injection
19 and shutdown cooling and Figure 6.2.2-1 which shows
20 the containment spray system, I do not see any
21 manual isolation valve on the suction side of the
22 containment spray valve.
23 And, your drawings are pretty good
24 about showing valves and flanges and reducers.
25 So, if I must remove a containment

spray pump from service, it seems to me that I must close the suction valve from the IRWST for that pump which prevents me from using the shutdown cooling pump in that train.

So, I'm curious about how do I align a shutdown cooling pump to replace a containment spray pump? What values -- what particular valves are open to do that? Or is a manual valve missing from your drawings?

MR. T. KIM: This is Tae Han Kim from KEPCO E&C again.

Actually, we have a cross connector line between the shutdown cooling system and the shutdown containment spray system. But, the DCD drawing is not showing everything in details, but we have some connecting lines.

MEMBER STETKAR: Well, it's -- I, you know, I see the connecting line. I understand how the pipes are connected. And, your drawing, in particular, for the containment spray system and the safety injection shutdown cooling system are rather detailed.

They're so detailed for the spray system is you show a 12-inch to 14-inch piping reducer. It shows a locked open manual valve V1003

on the discharge side of the pump.

I see no manual valve on the suction side of the containment spray pump. And, I cannot find one in any drawing.

So, if there's no valve there, if that's the certified design with no valve there, then, if I must remove a containment spray pump from service to repair it for whatever reason, it seems that I must close the containment spray pump suction valve from the IRWST because that is the only isolation valve that I have for the pump.

If I close the spray pump suction valve from the IRWST, that is the same suction supply to the SCS pump, meaning, I cannot use the SCS pump.

Do you understand what I'm saying?

MR. T. KIM: The first question, the cross connecting -- one of the cross connecting valve is 340 --

MEMBER STETKAR: Let me give specific valve numbers.

MR. T. KIM: Three hundred and forty.

MEMBER STETKAR: Three forty, yes, 340 is --

MR. T. KIM: Is the correct one of --

MEMBER STETKAR: Right.

1 MR. T. KIM: -- the connecting valves.

2 MEMBER STETKAR: Right. But, if you

3 look at the flow diagram, I must close 347, 3-4-7,

4 to isolate the suction of the spray pump because

5 there is no manual valve between the junction to

6 340 and the suction of the spray pump. I cannot

7 find a manual valve in your certified design.

8 So, to isolate a spray pump, it seems I

9 must close 347. If I close 347, that isolates 340

10 and the shutdown cooling pump cannot take a suction

11 from the IRWST.

12 MR. T. KIM: Actually, right now, we

13 didn't bring the whole detail P&ID here so --

14 MEMBER STETKAR: Okay. So, maybe

15 something is missing from the certified -- the

16 drawings and the certified design. But, I get

17 really upset when things are missing from the

18 drawings and the certified design because they are

19 the certified design.

20 And, indeed, the drawings do show a

21 large number of manual valves.

22 So, I'll ask you to check to see, is

23 there a manual valve in the line between the

24 junction of valve 340 and the suction of the

25 containment spray pump, please?

1 And, if there is, I'm good. I
2 understand how it works. I can get water there a
3 different way, but your whole discussion says that
4 I use that cross connect with 347 and whatever the
5 other one is there that I can't read, 341, I think.
6 So, that's a question I have about that
7 valve.
8 There is one, you can see, in the
9 suction line of the shutdown cooling pump going the
10 other way, it's V-1-0, my eyes are not very good,
11 it's 5 or 6.
12 Different, but related topic, you said
13 that, if I use a shutdown cooling pump to replace
14 the spray pump for the containment spray function,
15 I line it up so I have suction discharge. And, it
16 says that the -- in that condition, the shutdown
17 cooling pump is capable of being automatically
18 started by a safety injection signal or a
19 containment spray signal.
20 Do the operators make that transfer?
21 In other words, how do the shutdown cooling pumps
22 receive the automatic start signal from containment
23 spray or safety injection? How is that automatic
24 and a start signal enabled?
25 MR. T. KIM: When the operator line up

the SCP, is there a CSP with the manual valve in the cross align, the interlock for this valve enable the SIS and the CSA containment spray injection system go the pump.

MEMBER STETKAR: It's interlocked with the valve?

MR. T. KIM: Yes.

MEMBER STETKAR: That's exactly what I was looking for. Thank you, thank you on that one. Thank you. I was worried about starting the pump without the valves open and, if it's interlocked with the valve, that's great. Thank you. But, still look for that manual valve on the suction of the spray pump.

MR. T. KIM: Actually, this drawing, I might can explain, but, you know, I have to define each bandwidth here, so I will have another chance to talk with this drawing.

MEMBER STETKAR: Okay, thank you.

MR. M. KIM: Go to the next slide.

The SCS has one open item. Question number four, to revise the ITAAC for gas operation addressing those things related to shutdown cooling system, safety injection system, containment spray system.

1 In the response, KHMP revised the ITAAC
2 to include the as-built evaluation for gas
3 containment.
4 MEMBER STETKAR: Before we go to the
5 pressurizer, where -- there is the suction line,
6 the SCS suction line from the hot leg located? Is
7 it at the bottom of the hot leg or is it up --
8 where relative to the mid plain of the hot leg is
9 the actual suction line located?
10 MR. T. KIM: This is Te Ha Kim, again,
11 KEPCO E&C.
12 It's the bottom line.
13 MEMBER STETKAR: It's directly from the
14 bottom?
15 MR. T. KIM: Yes.
16 MEMBER STETKAR: Thank you. Good.
17 MR. CHOI: Pressurizer, Seognam Choi
18 speaking.
19 The function of the pressurizer is to
20 control the rate of coolant system pressure and the
21 volumes by the operational transient without
22 opening the safety valve which the over
23 pressurization arises is protected by the full
24 pilot operating safety relief valve is on the top
25 of the pressurizers.

1 The inside volume of the pressurizer is
2 2400 cubic feet and this is connected to the third
3 line at the bottom.
4 This is the design parameters of
5 pressurizer for APR1400 and the shapes.
6 And, this figure is APR1400 pressurizer
7 related to the hydrostatic testing at the shafts.
8 MEMBER STETKAR: I have -- I'm sorry, I
9 have one more question on shutdown cooling system,
10 and you don't need to go back on slides.
11 In Section 5.4.7.2.2 of the DCD,
12 there's a statement that said the failure position
13 of each valve on loss of actuating signal or power
14 supply is selected to provide reasonable assurance
15 of safe operation.
16 System redundancy is considered one
17 defining the failure position of any given valve.
18 In Section 5.7.2.5, you note that the
19 SCS does not utilize any pneumatically operated
20 valves. So, the only valves that I could see on
21 your flow diagrams are either manual valves or
22 motor operated valves.
23 In my experience, most motor operated
24 valves, if I do not have any power to them, they
25 fail, so-called, as-is. If it's closed, it remains

closed. If it's open, it remains open. And, that's also typically the case if I don't have any signal for it.

So, I'm curious about this statement that you have selected, fail positions for the valves in the SCS and that those failed positions have been defined based on some consideration of redundancy of the system.

Are there -- let me ask the question more simply, are there any valves in that system that do not fail as I would call it, as-is. If it's closed, it remains closed. If it's open, it remains open.

MR. T. KIM: Yes, this is Hae Han Kim again.

As you explained, sir, MOBs fail as-is, but some of the SOV is.

MEMBER STETKAR: But, I didn't see any SOVs in the SCS. I saw them in other systems. Are there SOVs in the shutdown cooling system?

MR. T. KIM: Sorry, I misunderstood with that.

MEMBER STETKAR: Oh, are there or are there not in -- this is the only place that I found in Chapter 5 where it discussed failure positions

where I did not see any SOVs.

So, I was curious why this statement applies to the shutdown cooling system?

MR. T. KIM: I'm sorry, actually, I misunderstand the Chapter 6 from --

MEMBER STETKAR: Oh, okay.

MR. T. KIM: -- so, that's the one, I think.

MEMBER STETKAR: Let me just put it on the record, I -- if it's only motor operated valves and they fail as-is, I understand how the system works, I just don't know what, in particular, that statement that I quoted means in the context of the certified design.

Because, to me, it implies that there's something active that was done to perhaps determine that a valve would reposition itself.

MR. SISK: Okay, Rob Sisk, Westinghouse.

I understand the comment. I think you're looking for automatic adjustments for repositioning. But, it may be simply that the system is aligned for this safe performance --

MEMBER STETKAR: And, I --

MR. SISK: -- if the valves do not

operate.

MEMBER STETKAR: I'm pretty happy with that statement, Rob. I trip over things where you talk about failure positions being selected as if --

I've seen people do things, for example, if a signal is not available, but power is available, they'll reposition a valve to what its so-called failure, you know, best guess in terms of the right position should be.

So, I've seen people get pretty creative with those types of things. You can't do much for a motor if there's no power to it. But, if power is to it and you don't have a signal, there might be something smart that says, oh, go open that valve that used to be closed because that's where I'd like it.

MR. SISK: I understand the comment. We'll have to discuss that internally.

MEMBER STETKAR: Yes. I doubt that that's the case, but I just stumbled over that and it gave ma lot of pause.

MR. SISK: Understood.

MR. M. KIM: 5.4.12, reactor coolant system high point vents.

1 Reactor coolant gas vent system, the
2 function is to discharge non-condensable gases and
3 steam from the high points of the RCS for venting
4 or pressure controlled during post-accident
5 conditions.
6 The IRWST collects the -- collects and
7 condenses the steam discharge from the coolant gas
8 vent system.
9 MEMBER STETKAR: Okay. I had a really
10 difficult time looking at the DCD, several sections
11 of the DCD to understand what the real connections
12 are to the IRWST.
13 There are different simplified drawings
14 in the DCD that show different connections and
15 they're all very simplified. Is there any drawing
16 anywhere in DCD Tier 1 or Tier 2 that unambiguously
17 shows every flow path into the IRWST, out of the
18 IRWST and things like the locations of spargers
19 within the IRWST?
20 I couldn't find one, but I admit, I did
21 not read all -- every page of the DCD.
22 MR. SISK: So, again, Rob Sisk,
23 Westinghouse.
24 For clarification, you're looking for
25 all of -- a drawing that shows all of the lines

1 into the IRWST and the spargers?

2 MEMBER STETKAR: Yes. It's, in

3 simplified, in a way that is unambiguous. Because,

4 for example, in one drawing, I'm led to believe

5 that the POSRVs -- let me use RCGVS as an example.

6 In one drawing, I'm led to believe that

7 RCGVS discharges through its own line. In another

8 drawing, it seems to discharge in a line that comes

9 from the containment purge system.

10 So, I don't know how many discharge

11 lines are, I don't know how they're oriented. And,

12 because I can't see anything, I don't know if there

13 are any valves in those lines that can be left

14 closed.

15 In particular, other than the one

16 drawing that I mentioned earlier this afternoon, or

17 this morning, no other drawing show those two motor

18 operated three-way valves in the POSRV lines.

19 So, without kind of an unambiguous

20 complete drawing, it's really difficult to see how

21 the thing is piped up.

22 MR. SISK: But, it sounds like you're

23 looking -- Rob Sisk, Westinghouse again.

24 It sounds like you're looking for

25 basically the system drawing. Because, if you're

1 looking just at the IRWST, you're not going to see
2 the --
3 MEMBER STETKAR: No, that's right.
4 But, I've looked at the system drawings and the
5 system drawings tend to just show arrows. And, I
6 went to the IRWST drawing in Chapter 6 and, in
7 particular, that drawing doesn't even show the
8 POSRVs coming into to the IRWST. It just shows
9 some other lines.
10 So, in Chapter 6, the one that
11 ostensibly shows the IRWST, and I think there was a
12 -- I think there was an RAI about that and the
13 response to that RAI said, well, yes, in Chapter 6,
14 we just showed the IRWST. It doesn't necessarily
15 show every line going into it.
16 I couldn't find one drawing anywhere
17 that showed everything.
18 MR. SISK: It would be complicated
19 drawing. But, I -- we understand what you -- your
20 comment.
21 MEMBER STETKAR: Well, it -- and, in
22 terms of complexity, I'm more concerned about how
23 lines are plumbed together, piped together and if
24 there might be valves in those lines and things --
25 People typically will show the location

1 of the spargers. For example, I don't know, are
2 the spargers relatively high in the IRWST? Are
3 they low? Where are the spargers in relation to the
4 suction lines for the SI pumps and the spray pumps?
5 MR. SISK: Let me ask Mr. Tae Han Kim
6 if he'd like to comment.
7 MR. T. KIM: I believe if you check the
8 Figure 6.8-3.
9 MEMBER STETKAR: 6.8-3? Yes.
10 MR. T. KIM: Yes.
11 MEMBER STETKAR: Yes.
12 MR. T. KIM: You checked already?
13 MEMBER STETKAR: It doesn't -- that
14 one, in particular, does not show the discharge
15 lines from the POSRVs or the RCGVS which is what
16 started me on my hunt.
17 Figure 2.4.1-2 in DCD Tier 1, now, is a
18 very, very simplified drawing. And, that leads me
19 to believe that lines are connected together.
20 All the other system drawings just kind
21 of show arrows going out to the IRWST.
22 MR. SISK: John, we're taking down the
23 comment and we'll look into that.
24 MEMBER STETKAR: Thanks.
25 MR. M. KIM: Have you mentioned the

1 Figure 2.4.5-1 of Tier 1? The --
2 MEMBER STETKAR: I looked at 2.4.1-2.
3 Which one did you say?
4 MR. M. KIM: 2.4.5-1 Tier 1 is this
5 diagram is for RCGVS.
6 MEMBER STETKAR: 2.4.5-1? I did not
7 look at that. I'll look at that later.
8 MR. SISK: Figure 6.8-3.
9 MEMBER STETKAR: Figure 6.8-3 does not
10 show the POSRVs or RCGVS, does it?
11 MR. SISK: It's got a lot of stuff on
12 it.
13 MEMBER STETKAR: It's got a lot of
14 stuff on it, it doesn't have that. It's got more
15 stuff than any other drawing I could find.
16 MR. M. KIM: Yes, every diagram is
17 simplified.
18 MEMBER STETKAR: Every diagram is
19 simplified and several are somewhat different.
20 MR. M. KIM: The figure in the response
21 to RAI question 82, RAI 82-44 --
22 MEMBER STETKAR: Yes.
23 MR. M. KIM: -- question number 5.2.2-2
24 --
25 MEMBER STETKAR: That refers --

1 MR. M. KIM: -- the figure shows the
2 IRWST and three-way valves and POSRV, but it is
3 also a simplified one.
4 MEMBER STETKAR: Yes, it is. I looked
5 at that one, too. Okay.
6 You only have this one slide on RCGVS,
7 right? Okay.
8 MR. M. KIM: Yes, it is.
9 MEMBER STETKAR: Let me ask you a
10 couple of questions about that.
11 In -- let me get my figure here first -
12 - give me a second because we're -- you're ahead of
13 me here.
14 If I look at Figure 5.4.12-1 which
15 shows the RCGVS flow diagram, there are manual
16 valves, V212, V2300 and V1430 that -- well, let me
17 be very clear here because we're on the record.
18 Figure 5.4.12-1 shows V1430 in the
19 discharge line from RCGVS to the IRWST. So, if
20 that valve is closed, if that valve 1430 is closed,
21 I cannot vent from the pressurizer or from the
22 reactor vessel head to the IRWST, which is part of
23 my question about understanding how things are
24 plumbed together.
25 I had to go look in other places, if I

1 look at Figure 5.1.2-1, that shows the connection
2 from the reactor vessel head to the RCGVS and it
3 shows a manual valve, V212 in that line.
4 So, if that valve is closed, I cannot
5 vent the head.
6 If I look at Figure 5.1.2-3, that shows
7 the connection from the pressurizer to RCGVS and
8 that drawing shows valve V2300 manual valve. And,
9 if that valve is closed, I cannot vent the
10 pressurizer.
11 So, I have a manual valve from the
12 reactor vessel head. I have a manual valve from
13 the pressurizer. And, then, I have a manual valve
14 in the discharge line to the IRWST.
15 My first question is, do those valves
16 have position indication in the main control room?
17 And, you may not have that. I mean, you know, yes.
18 MR. SISK: We've taken a note down.
19 MEMBER STETKAR: Yes, okay. My follow
20 up question on that was, if they don't have
21 position indication in the main control room, when
22 are those valves closed during normal plant
23 shutdown and refueling operations? You know, when
24 are they repositioned?
25 Because they had position indication

and, you know, the operators know that they're open, then I'm okay.

I just want to make sure that I understand the solenoid valves in the RCGVS, according to Table 5.4.12-1, those are DC powered valves, is that correct?

MR. OH: This is Andy Oh, KHMP, Washington Office.

You are asking about RCGVS solenoid valve power source?

MEMBER STETKAR: Yes, yes, there's a table, I think I know the answer, I'm just trying to confirm it.

MR. OH: Yes, they are DC power.

MEMBER STETKAR: They are DC power?

MR. OH: Mm-hm.

MEMBER STETKAR: Thank you.

Because, it was a bit confusing when I read it. I think I know the philosophy. The text in the DCD emphasizes the fact that RCGVS can receive power from the alternate AC generator. That's not quite accurate.

The alternate AC generator can provide power to either the battery charger in Division A or the battery charger in Division B. Those

1 batteries are rated for eight hours.
2 The Division C and Division D batteries
3 are rated for 16 hours.
4 So, I need the AAC generator to be able
5 to operate RCGVS for 16 hours. And, I kind of get
6 that.
7 Now, my question is, and this is for
8 the PRA people, you will not be able to answer it
9 today, I just want to put it on the record.
10 According to the plant design, after 16
11 hours, I cannot operate RCGVS because the solenoid
12 valves will fail closed. Even if I had the
13 alternate AC generator, because that can only
14 supply one division.
15 So, is there any part of the PRA, in
16 particular, the Level 2 PRA, where you take credit
17 for venting the pressurizer, in particular, through
18 the RCGVS to keep pressure low in the Level 2 PRA
19 after 16 hours?
20 Typically, in a Level 2 PRA, you'll ask
21 a question of, is reactor coolant system pressure
22 high or low and is it maintained low?
23 And, I don't know -- I didn't go look
24 at the PRA to examine how they answered that
25 question. I didn't have time. And, I don't know

1 what the timing is in the PRA.

2 So, this is more of a PRA question.

3 I'll bring it up again in the PRA, but this is kind

4 of a warning shot before we get to Chapter 19.

5 I just want to, first of all, I wanted

6 to make sure that they were at DC power and you've

7 answered that question. So, thank you.

8 How big is the pressurizer vent piping?

9 The drawing, this Figure 5.4.12-1 indicates that

10 the piping from the reactor vessel head is three-

11 quarter inch diameter. And, there was a question

12 about, I know that the staff asked the question

13 about a LOCA in that line.

14 I couldn't find a size on the line from

15 the pressurizer. Do you know how large that is?

16 I mean I can speculate, but I don't

17 want to do that.

18 MR. J. KIM: Which line?

19 MEMBER STETKAR: It's the line -- it's

20 the vent line from the pressurizer to RCGVS. So,

21 it's that common vent line that comes off the four

22 POSRV head. It's the line that goes over to the

23 solenoid valves that are shown on Figure 5.4.12-1.

24 MR. OH: This is Andy Oh, KHMP

25 Washington Office again.

1 And, from the pressurizer to the RCGVS,
2 the size of pipe is two inch.
3 MEMBER STETKAR: Two inch? Okay,
4 thanks. That's -- I know it was -- it's shown,
5 it's two inches through the solenoid valves, but I
6 didn't know if it was larger or smaller than two
7 inches coming out. So, it's a two inch line?
8 Thank you.
9 Okay, you're going to get to take a
10 break, so I only have one more question here.
11 Maybe two more.
12 In the DCD, there's a discussion about
13 leak detection for RCGVS and I know how the system
14 is configured.
15 It says the RCGVS is designed not to be
16 used during normal operation. The piping is
17 designed to slope downward to drain to the reactor
18 drain tank and the IRWST.
19 The potential for leakage is very low
20 and a leak detection system is not required.
21 I always get concerned when people say
22 the potential is very low. I understand that the
23 desire, in fact, is to open these lines. But, my
24 concern is, if those solenoid -- if two of the
25 solenoid valves are leaking or for some reason are

1 stuck open and the operators want to control a
2 depressurization, they may not have the control
3 that they want.
4 The system actually is configured for
5 leakage detection in the same way that other
6 systems that you discuss in the plant can discover
7 leakage.
8 And, I was curious why you specifically
9 say you don't need leakage detection on this system
10 when you have the capability of detecting leakage
11 by pressure transmitter PT-106, in particular, and
12 the ability of the operators to open the valve to
13 the reactor drain tank to check for amount of
14 leakage flow if you detect high pressure.
15 So, it's -- personally, it's not a big
16 concern from my perspective. This, again, is a
17 subcommittee meeting, so I can say that.
18 But, I'm always curious about people
19 saying I don't need something because something is
20 very unlikely.
21 Typically, our experience then shows
22 when that unlikely thing happens, people are very
23 concerned.
24 So, I'd ask you to recheck that
25 statement about why you don't need leakage

1 detection. Because you may have it already.
2 Now, the last question that I have --
3 actually, I'll wait and I'll ask the last -- I'll
4 ask the staff my last question because it's more
5 relevant to them.
6 So, I'm sorry, I'm done now.
7 MR. CHOI: Seognam Choi speaking.
8 Yes, these components support it.
9 This slide shows the schematic view of
10 the APR1400 or main component in the support. The
11 reactor vessel have the full operator columns and
12 that is connected to the bottom of the floor in
13 others.
14 The steam generator has a sliding base
15 and sliding base is connected to the bottom and two
16 keys are located at the upper shelf of steam
17 generators.
18 Pressurizer support is integral support
19 and this is at the bottom is connected to AE
20 building. And, with coolant components four
21 breaker columns at the bottom and two upper and
22 lower rated columns and two reactor snivels at the
23 bottom of ICD motor stem.
24 MR. M. KIM: Minseok Kim is presenting.
25 In summary, Chapter 5 describes the

1 design features of the coolant system of APR1400.
2 All the ICS components are located inside the
3 containment building.
4 The table shows the pre-installed
5 parameters for the system. ICPD components are
6 considered with the 10 CFR 50.2 as the depiction of
7 the ICPD and 10 CFR 50.55(a) the code and
8 standards.
9 The applicable code and standards of
10 the components are listed in Chapter 3, Table 3.2-
11 1.
12 Chapter 5 is on a success path for
13 completion on schedule. An SER with open items was
14 issued. A path for closing each open item has been
15 discussed with the NRC staff and is being
16 implemented.
17 KHMP believes that the open items,
18 except for flywheel, which is in progress, have
19 been addressed.
20 Chapter 5 as reviewed and marked up in
21 response to NRC's RAI will be incorporated into the
22 next revision of the DCD.
23 Monitoring of changes to other chapters
24 for impacts on this chapter is conducted to
25 maintain consistency.

1 This is all of our presentation we
2 prepared. I thank you for your attention.
3 CHAIRMAN BALLINGER: Thank you.
4 Now, we have an option, we can --
5 MEMBER STETKAR: No, you're going to
6 ask does anybody have any more questions first.
7 CHAIRMAN BALLINGER: Okay. That's all
8 I was going to say, but it is what I'm going to say
9 now. I was going to offer a break and then talk.
10 MEMBER STETKAR: All right. Because,
11 the staff's going to come up, right?
12 CHAIRMAN BALLINGER: No.
13 MEMBER STETKAR: Oh.
14 CHAIRMAN BALLINGER: We've now
15 succeeded in getting ourselves right back on
16 schedule.
17 MEMBER STETKAR: Okay.
18 CHAIRMAN BALLINGER: A little late,
19 actually.
20 MEMBER STETKAR: Let me, you know, let
21 me cut to the chase.
22 Appendix 5A discusses interfacing
23 system LOCA analyses. And, first of all, let me
24 say that this is the first DCD where I've seen such
25 a comprehensive assessment of interfacing system

1 LOCA pathway as I think that it was really -- I was
2 really pleased to see that. I've not seen anybody
3 address that issue in this level of completeness
4 before. So, let me preface any comments that I
5 have with that.
6 I did have a couple of questions
7 related to those analyses.
8 The first question I had is simply one
9 of completeness that you did a very comprehensive
10 evaluation of every system connected to the reactor
11 coolant system to identify the flow paths,
12 isolation valves and so forth, except for one.
13 And, that is the auxiliary pressurizer
14 spray line. Why did you not include that? Your
15 conclusion, I'll tell you, I think, would be the
16 same for the charging line as the auxiliary
17 pressurizer spray line. But, you didn't include
18 it.
19 So, when I went, conceptually, around
20 the reactor coolant system and looked for piping,
21 that one seemed to be missing.
22 So, that's just a comment. It's --
23 everything else seemed so complete that I didn't
24 know why it wasn't there. I mean, you even went
25 down the sample lines.

1 MR. SISK: We're going to have to take
2 a look at that to see if there's a particular
3 reason or if it's --
4 MEMBER STETKAR: Well, I don't know
5 whether there's a reason or not.
6 MR. SISK: Yes, we'll --
7 MEMBER STETKAR: I'm not -- it was --
8 everything else was so complete that I was looking
9 for something that was missing and I thought I
10 found something.
11 A couple of questions, and I understand
12 the analyses, I think they're really good. There
13 are a couple of places where you take credit for
14 manual operator actions to isolate systems before
15 other systems become over pressurized.
16 And, in particular, I'm looking at the
17 let down and charging lines where you say, well,
18 the operators have pressure indications. There are
19 relief valves to the reactor drain tank.
20 How large is -- and Dick Skillman asked
21 this morning for a different reason -- what is the
22 capacity of the reactor drain tank in terms of
23 volume and what is its pressure rating?
24 Because, essentially, your analysis
25 says I can blow to the reactor drain tank for long

1 enough so that the operators recognize the need to
2 isolate the let down or charging line and stop the
3 release. I mean, that's basically the philosophy
4 for those two pathways.
5 So, if the -- for example, if the
6 reactor drain tank could hold two liters and failed
7 at a pressure of, you know, two pounds, that would
8 not provide very much time for the operators to
9 isolate the lines.
10 If it's a relatively large tank, that
11 provides much more time. So, that's why I'm asking
12 about that particular question.
13 MR. M. KIM: The internal volume of the
14 reactor drain tank is specified in the Table 934-2.
15 MEMBER STETKAR: 93 --
16 MR. M. KIM: A thousand gallons and the
17 minimum is added.
18 MEMBER STETKAR: I can look it up.
19 It's 934-2, you said, the table number?
20 MR. M. KIM: The table number is 934-2.
21 MEMBER STETKAR: 934-2, I will look
22 that up in the interest of time. Thank you.
23 CHAIRMAN BALLINGER: Now, I'm confused.
24 MEMBER STETKAR: Why?
25 CHAIRMAN BALLINGER: It's -- we're

1 finished in effect.

2 MEMBER STETKAR: No, we're not. I have

3 one more question.

4 CHAIRMAN BALLINGER: Okay.

5 MEMBER STETKAR: As best as I can --

6 this, again, is just so I understand the integrated

7 plant. As best as I can tell, each main steam

8 safety valve has a rated capacity of slightly more

9 than five percent rated power. Is that --

10 I think I found -- I did some

11 calculations and I came out with each main steam

12 safety valve having a rating capacity of about 5.3

13 percent full power.

14 And, that seems to be consistent with

15 statements that all 20 MSSVs can relieve full

16 power. Each POSRV, my guess is, can relieve about

17 3.5 percent full power. And, I'd like to confirm

18 that my estimates are correct or, they don't have

19 to be precise, but approximately correct.

20 The reason is, not for anything in

21 Chapter 5, I'm looking out at Chapter 19 and the

22 success criteria for the PRA. So, I want to make

23 sure that I understand what those relief capacities

24 are.

25 So, if you can confirm that. As I

1 said, I did a couple of back of the envelopes and I
2 think I'm close, but I'm not sure.
3 MR. SISK: Again, we've got the
4 comment, we'll take a look at that.
5 MEMBER STETKAR: Thanks.
6 And, now, I'm done. I'm finished, no
7 more.
8 CHAIRMAN BALLINGER: I think I'll wait
9 a few seconds just to see.
10 Thank you.
11 Okay, so, now we're, again, we have an
12 option of taking a break and then coming back to
13 have any further discussion or having discussion
14 now.
15 So, my vote is, since we're already
16 half an hour late, we might just as well go around
17 the table and ask about questions.
18 MEMBER MARCH-LEUBA: I'll second that
19 one.
20 CHAIRMAN BALLINGER: Soft vote.
21 Okay, any questions around -- from
22 members? I think we have to open the line, right?
23 In the meantime, are there any
24 questions from the audience? Any people want to
25 make a statement or anything?

1 Hearing none, hopefully the line will
2 be open.
3 Okay, I think -- okay, I think the line
4 is open. Just to be sure, is anybody out there,
5 can you make a human noise so that we can verify
6 that?
7 MS. BANERJEE: Yes, Maitri's out there.
8 CHAIRMAN BALLINGER: Great, that's a
9 human.
10 MEMBER POWERS: You're very generous in
11 your appraisals here.
12 CHAIRMAN BALLINGER: Okay, is there
13 anybody out there that would like to -- any member
14 of the public out there that would like to make a
15 statement?
16 Going once, going twice, closed.
17 Okay, so there are no comments. Can we
18 close the line?
19 Okay, I think that pretty much
20 concludes today's -- we did -- oh, now we can go
21 around the table.
22 Joy?
23 MEMBER REMPE: I don't have any
24 additional comments. Thanks for all your
25 presentations.

1 MEMBER BROWN: Thank you very much.
2 Charlie Brown. Thank you very much and who can
3 compete with John. So, I give up.
4 MEMBER MARCH-LEUBA: I have no further
5 comments.
6 CHAIRMAN BALLINGER: I'd like to thank
7 you. You covered a lot of material today. I'm
8 obviously a detail oriented person, but one of the
9 roles that the ACRS provides that is to look at
10 integrated plant safety.
11 So, a lot of the things that I ask, I'm
12 trying to understand system interactions. I'm
13 trying to understand how the design relates to
14 success criteria and the risk assessment.
15 I'm trying to understand how the risk
16 assessment results feed back into the design and so
17 forth.
18 So, many of my questions come from that
19 direction.
20 In the future, I'll just make this
21 statement on the record, less emphasis on open RAIs
22 and more emphasis on technical information from the
23 design would be appreciated. We can read RAIs and
24 things like that from the staff. So, from your
25 perspective, keep it more technical.

1 But, again, thank you.

2 MEMBER SUNSERI: Thank you for your

3 presentations. I enjoyed them and I have no

4 further questions.

5 CHAIRMAN BALLINGER: Dr. Powers?

6 MEMBER POWERS: Nothing.

7 CHAIRMAN BALLINGER: Pete?

8 MEMBER RICCARDELLA: I'm impressed by

9 the level of detail that you've gone into and

10 particularly by how much you've recognized the

11 lessons learned with existing plants and the

12 problems with existing plants and how to avoid

13 those, particularly in the materials area.

14 CHAIRMAN BALLINGER: And, I would like

15 to thank you for a great -- a very good

16 presentation.

17 I have in front of me from Maitri a set

18 of action items and I would propose that tomorrow

19 near the end of our talk those -- we should go

20 through those action items to make sure everybody's

21 on the same wave length. Because, we could do it

22 now, but it would take a long time.

23 So, with that being said, I think we

24 are adjourned until tomorrow morning at 8:30.

25 (Whereupon, the above-entitled matter

1 went off the record at 3:27 pm.)

2

3

4

5

6

7

8

9

10

11

12

13

14

15

16

17

18

19

20

NON-PROPRIETARY

# Overview of the APR1400 DC Project

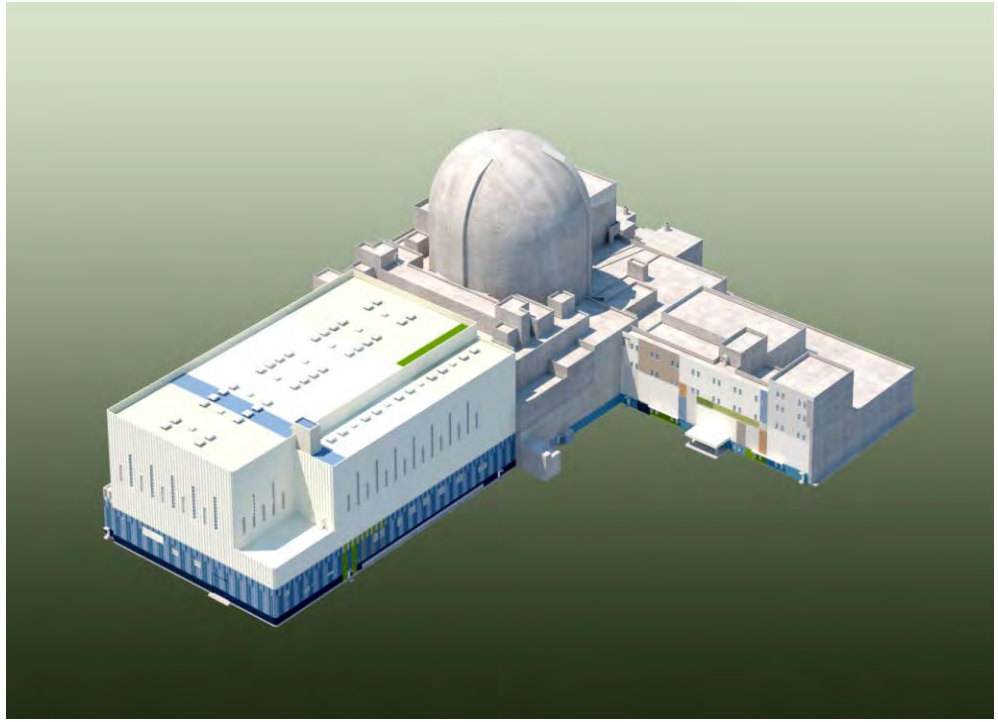

## KEPCO/KHNP

## Sep. 21~22, 2016

# Contents


- Introduction
  - References for design overview of the APR1400
  - NPPs in Korea
  - Project History
- Design Features and General Arrangement
- Design Review Status
- Summary

# References for design overview of the APR1400

- **List of Presentations to the ACRS in April 20-21, 2016**

| Document No. | Title |
|---|---|
| APR1400-Z-M-EC-16002-NP | APR1400 system design (Nuclear steam supply system) |
| APR1400-F-M-EC-16002-NP | APR1400 system design (Fuel design) |
| APR1400-E-N-EC-16001-NP | APR1400 system design (Containment system) |
| APR1400-E-C-EC-16001-P/NP | Seismic design analysis |
| APR1400-Z-M-EC-16001-P/NP | Structural analysis for reactor coolant system |
| APR1400-E-B-EC-16001-P/NP | Piping design (Piping stress analysis) |
| APR1400-E-N-EC-16003-P/NP | Piping design (Hazard analysis) |
| APR1400-E-N-EC-16002-P/NP | Radioactive waste management and radiation protection |
| APR1400-E-E-EC-16001-P/NP | Electrical system design |
| APR1400-Z-J-EC-16001-P/NP | Instrumentation & control system |
| APR1400-K-I-EC-16001-P/NP | Man-machine interface system |
| APR1400-E-N-EC-16004-P/NP | Plant security design (Aircraft impact analysis) |
| APR1400-E-N-EC-16005-P/NP | Plant security design (Loss of large area analysis) |
| APR1400-F-A-EC-16001-P/NP | Safety analysis |
| APR1400-E-P-EC-16001-P/NP | Probabilistic risk assessment |
| APR1400-K-X-EC-16002-P/NP | Mitigation strategies for beyond design basis event |

# Nuclear Power Plants in Korea

| | | |
|---|---|---|
| In Operation | 24 Units | 21,716 MW |
| Commissioning (Reference Plant) | 1 Unit | 1,400 MW |
| Under Construction | 3 Units | 4,200 MW |
| Planning | 6 Units | 8,600 MW |

Hanul 1,2,3,4,5,6

Shin-Hanul 1,2
Shin-Hanul 3,4

Wolsong 1,2,3,4
(PHWR)

Shin -Wolsong 1,2

Hanbit 1, 2, 3, 4, 5, 6

Kori 1,2,3,4
Shin-Kori 1,2

Shin-Kori 3,4
Shin-Kori 5,6

# Project Organization

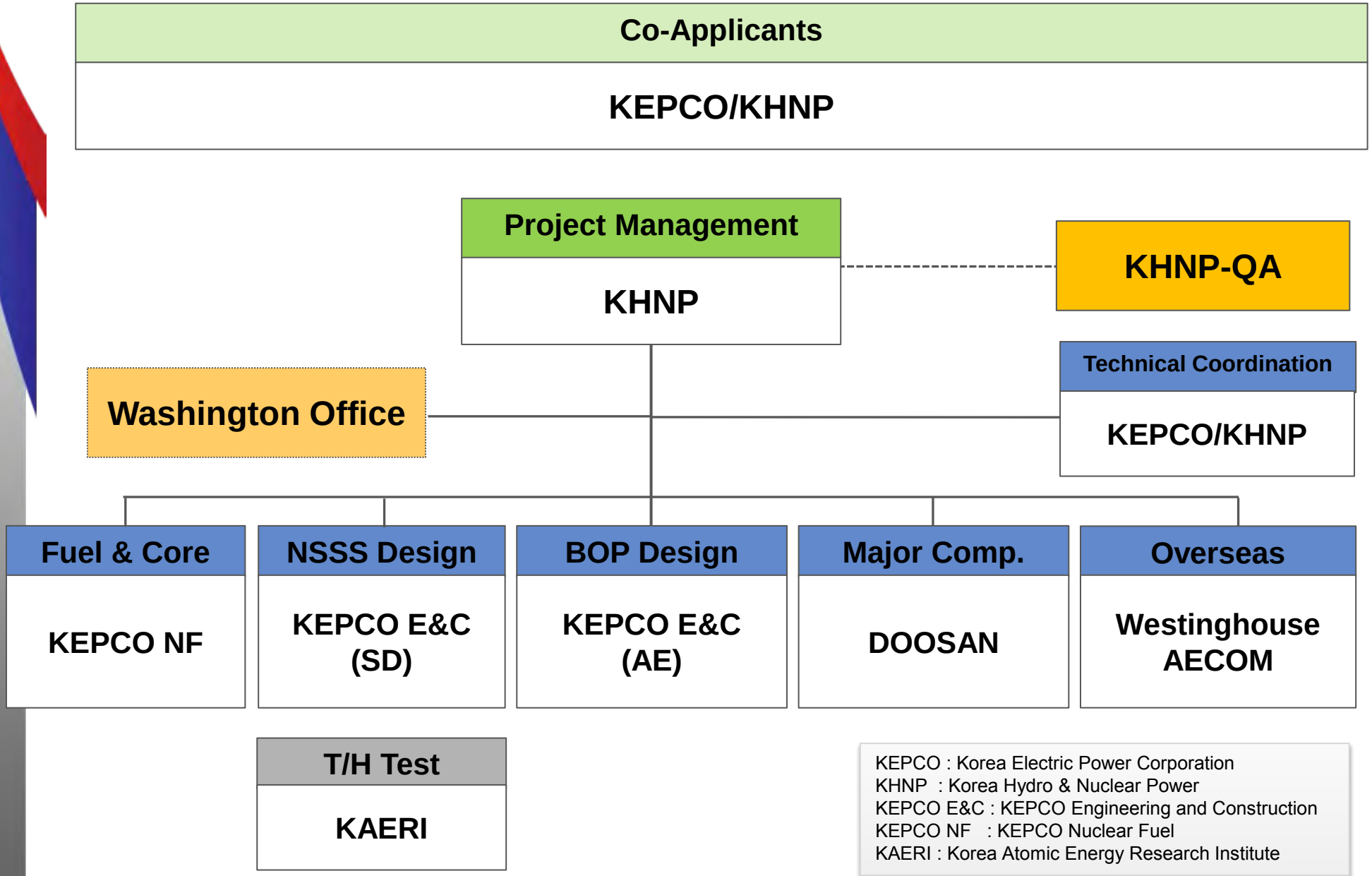


KEPCO : Korea Electric Power Corporation
KHNP : Korea Hydro & Nuclear Power
KEPCO E&C : KEPCO Engineering and Construction
KEPCO NF : KEPCO Nuclear Fuel
KAERI : Korea Atomic Energy Research Institute

NON-PROPRIETARY

# Project History and Progress

- [Mar. 2009] Submittal of the Intent of APR1400 DCA to the U.S.NRC
- [Apr. 2010~Oct. 2014] Performed total 18 PARMs
- [Sep. 2013] First Submittal of the APR1400 DCA to the U.S.NRC
- [Dec. 2013] Non-accept of the APR1400 DC application
- [Dec. 2014] Resubmittal of the APR1400 DCA to the U.S.NRC
- [Mar. 2015] Receive the Docketing letter of APR1400 DC application
- [Apr. 2015] Receive the First RAIs[Ch. 2 & 3]
- [Jan. 2016] Finished Phase I Review



U.S.NRC
United States Nuclear Regulatory Commission
*Protecting People and the Environment*

**NRC NEWS**
Office of Public Affairs, Headquarters
Washington, DC 20555-0001
www.nrc.gov ▪ opa.resource@nrc.gov

No: 15-012 March 4, 2015
CONTACT: Scott Burnell, 301-415-8200

**NRC To Begin Full Certification Review of APR1400 Reactor**

The Nuclear Regulatory Commission has docketed for review Korea Electric Power Corp. and Korea Hydro and Nuclear Power's application to certify the APR1400 reactor design for use in the United States.

NON-PROPRIETARY

# Development history of APR1400

- Development of Advanced Power Reactor 1400 (1992~2002)
- Licensing agreement with ABB-CE

EPRI URD/EURD
Sys. 80+
(CE, 1300MWe)

**APR 1400**
1,400 MWe
- Under Construction
  - SKN 3/4, SHN 1/2
- Planning : SKN 5/6, SHN 3/4

*Sys. 80+*
*(CE, 1300MWe)*

Latest Codes &
Standards

**Improved OPR 1000**
- In Operation - SKN 1/2, SWN 1/2

**OPR 1000**
- In Operation - Hanbit 3/4 ('95/'96) - Hanul 3/4 ('98/'99)
  - Hanbit 5/6 ('02/'02) - Hanul 5/6 ('04/'05)

**NSSS Design**
Palo Verde #2 (CE,1300MWe)

**Core Design**
ANO #2 (CE,1000MWe)

# APR1400 Design Features

- **APR1400 referenced Shin Kori units 3&4.**
- **APR1400 is an essentially complete design**
  - Construction completed in Korea (Shin Kori Units 3 & 4)
    - OL for Shin Kori Unit 3 issued on October 2015
    - Criticality reached on December 2015
    - Commercial operation scheduled on October 2016
  - Under-construction in UAE (Barakah Units 1 - 4)

SKN 3&4, Korea

Barakah, UAE

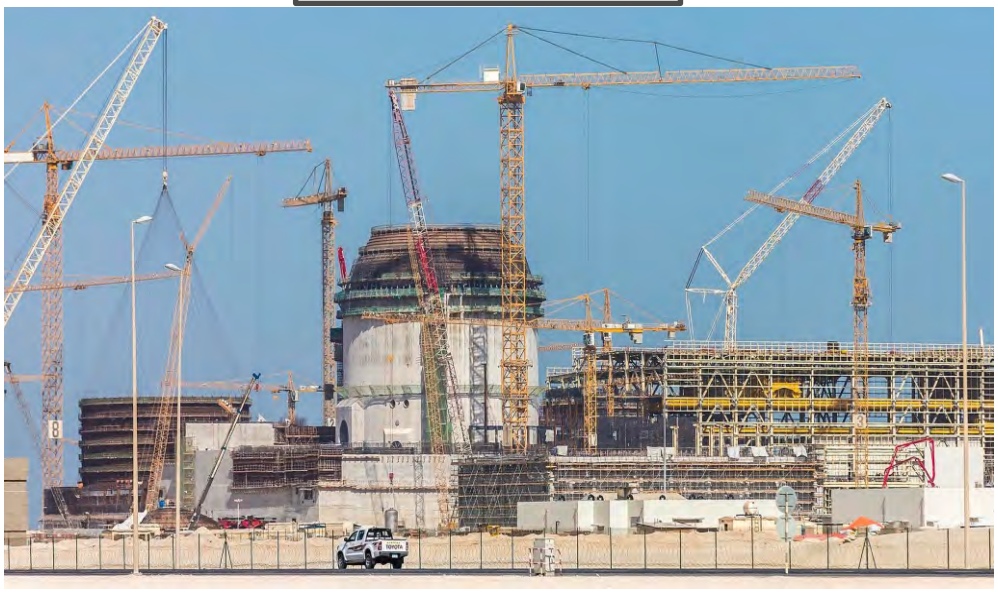

# Design Features of the APR1400

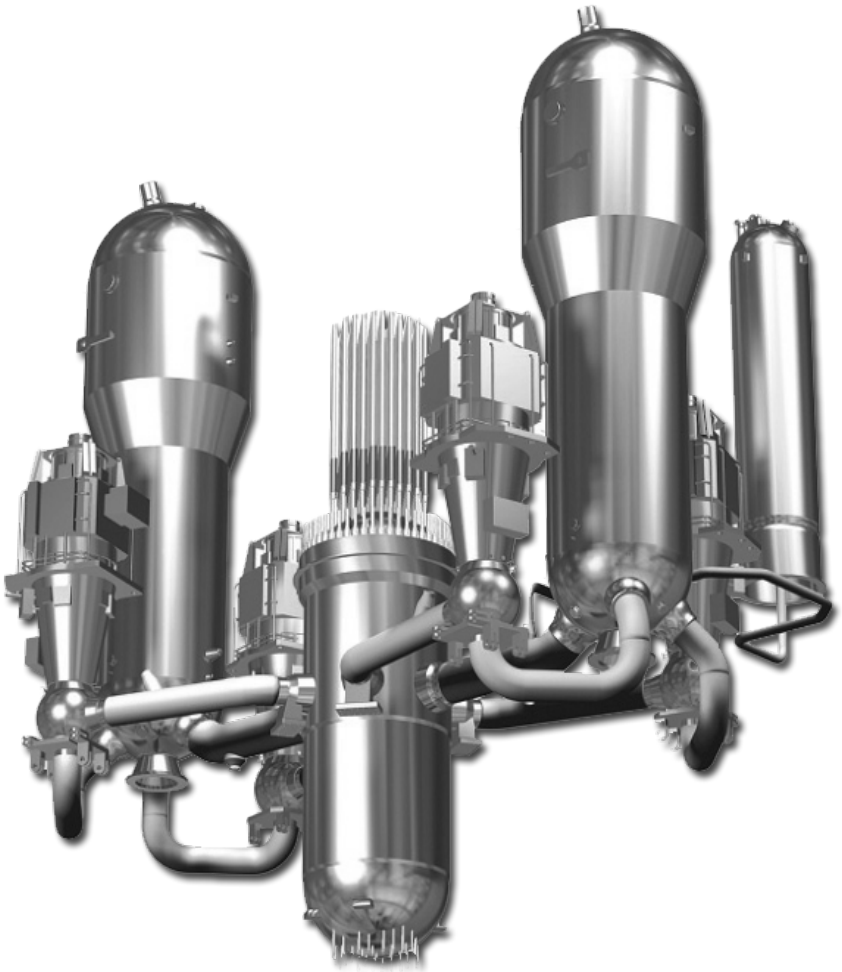

- Design Life Time : 60 Years for Class 1 Major Equipment
- Power : 4000MWth / 1400MWe
- Two-Loop : 2 HLs, 2 SGs, 4 RCPs, 4 CLs, 1 Pzr
- Primary Operating condition:
  - Pressure : 2250psia
  - HL/CL Temp. : 615/555 ˚F
- Secondary Operating condition:
  - Pressure : 1000psia
  - MF/MS Temp. : 450/545 ˚F
- Pzr Free volume : 2400 $ft^3$
- SG U-tube : 13102/SG, Alloy 690TT

# APR1400 for NRC DC(1/2)

## Basic approach of design change for NRC DC

- **Retain reference plant design (SKN 3&4)**
  - To take advantage of proven safety and performance
- **Meet US NRC Regulation Guidance effective on Aug. 2014**
  - Six month before the target docketing date

# APR1400 for NRC DC(2/2)

## Special Design Considerations for NRC DC

- **Enhance SBO coping capability**
  - Gas turbine generator for AAC source, 16 hr battery, FLEX implementation
- **Improve the tolerance to the beyond design basis**
  - Analysis of aircraft impact by 10CFR50.150
  - Application of LOLA (loss of large area) design requirement
  - Application of physical security requirement
- **Robust design for the design base accidents**
  - GSI-191 for LBLOCA
  - Diverse reactor protection systems for common cause failures
  - Application of FEM model to seismic design

# Design Differences between APR1400 and System 80+

SIS: safe injection system
DVI: direct vessel injection
POSRV: pilot operated safety relief valve
IHA: integrated head assembly
CFS: core flooding system
PAR: passive autocatalytic recombiner
IVR: in-vessel retention
ERVC: external reactor vessel cooling

**Containment**
- System80+ : Spherical Steel
- APR1400 : Cylindrical PS Concrete

**Thermal Power**
- System80+ : 3,931 MWt
- APR1400 : 4,000 MWt

**Hot-leg Temp.**
- System80+ : 621F
- APR1400 : 615F

**RCS OPP / RD System**
- System80+ : 4 PSV + 2 SDS
- APR1400 : 4 POSRV

**RV Upper Structure**
- System80+ : Conventional
- APR1400 : IHA

**Severe Accident**
- System80+ : CFS
- APR1400 : CFS + PAR, IVR/ERVC

**Safety Injection System**
- System80+ : 4 train SIS + DVI
- APR1400 : 4 train SIS + DVI + Fluidic Device

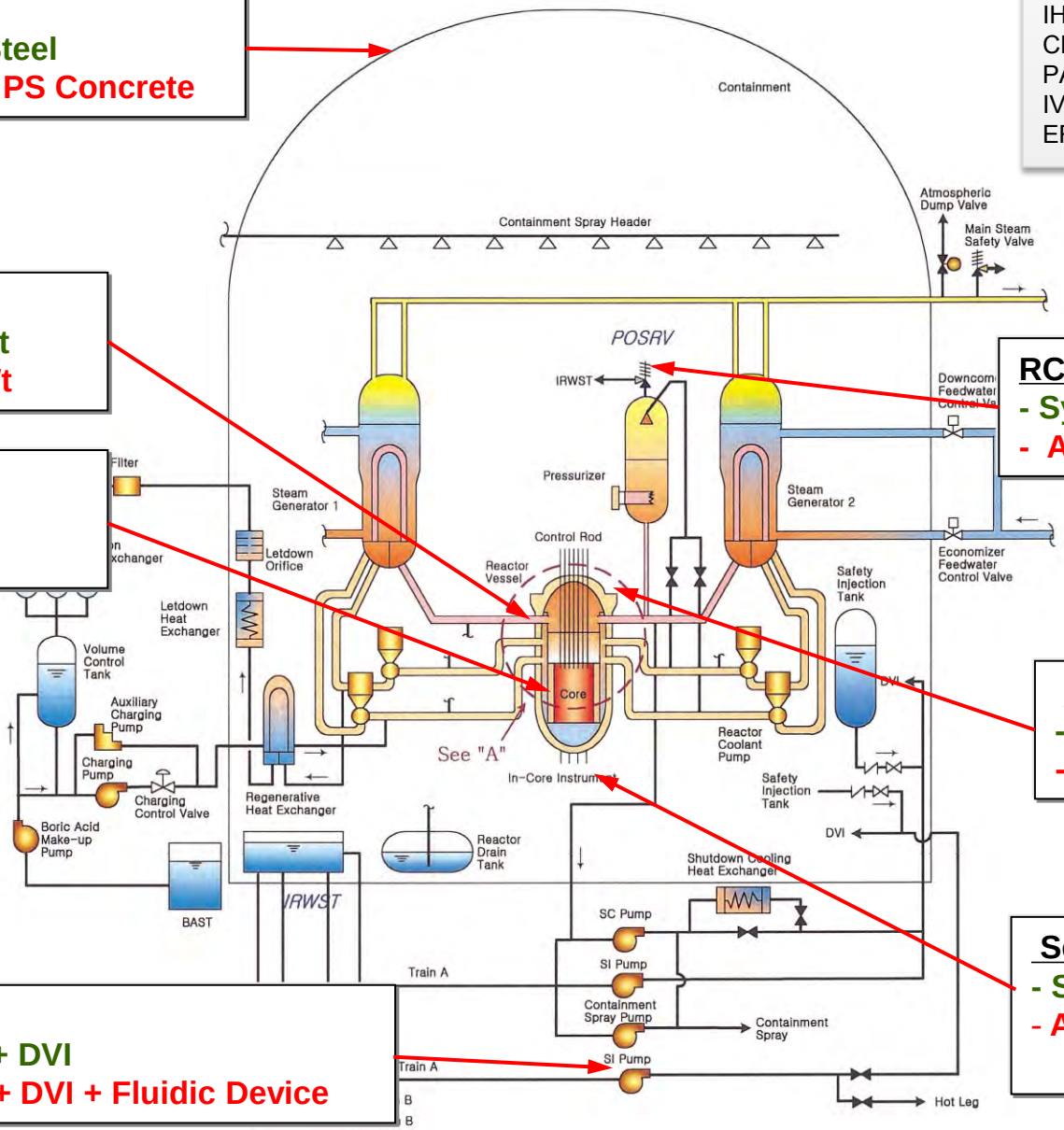

# General Arrangement (1/3)

## Plant General Arrangement

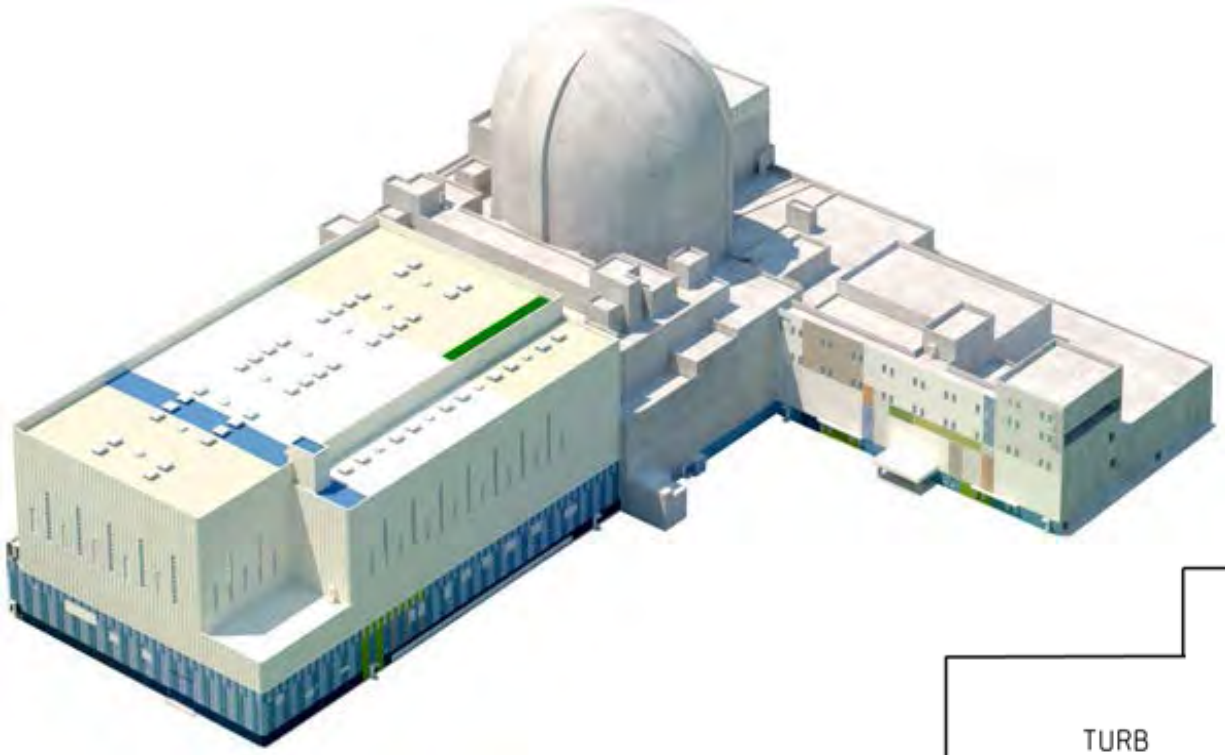

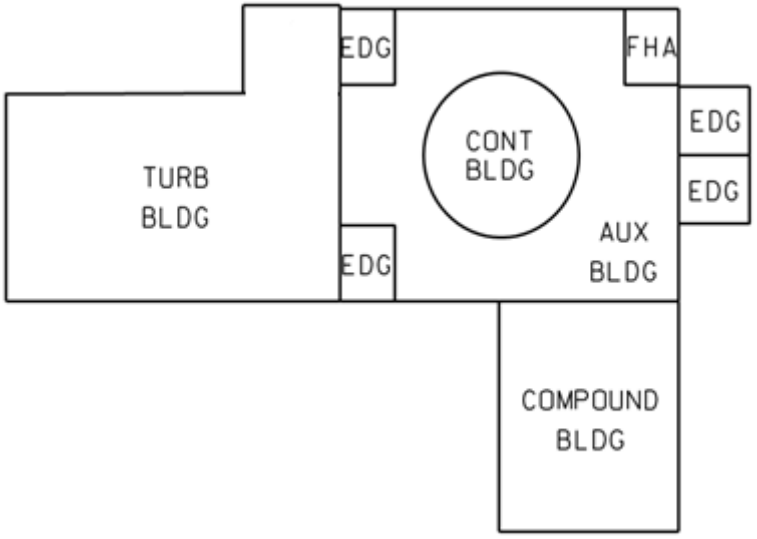

# General Arrangement (2/3)

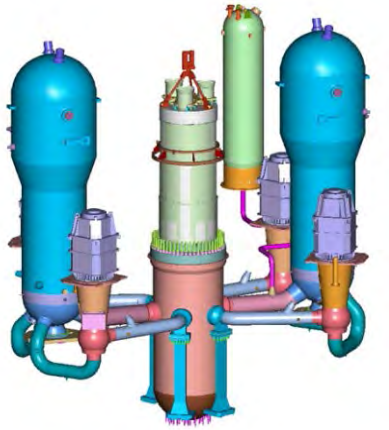

## RCS Arrangement Plane

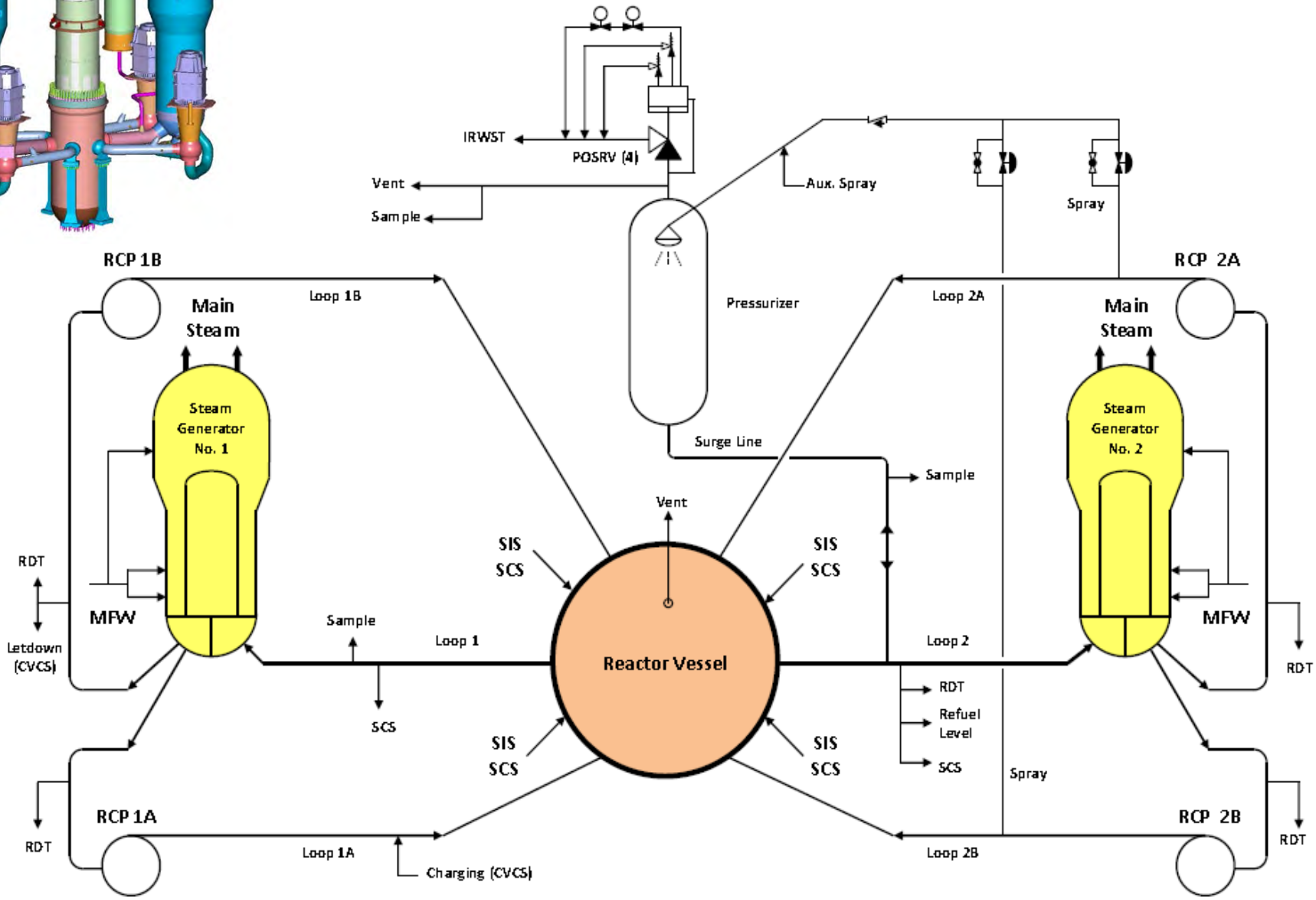

# General Arrangement (3/3)

## Quadrant Arrangement of Aux. Building

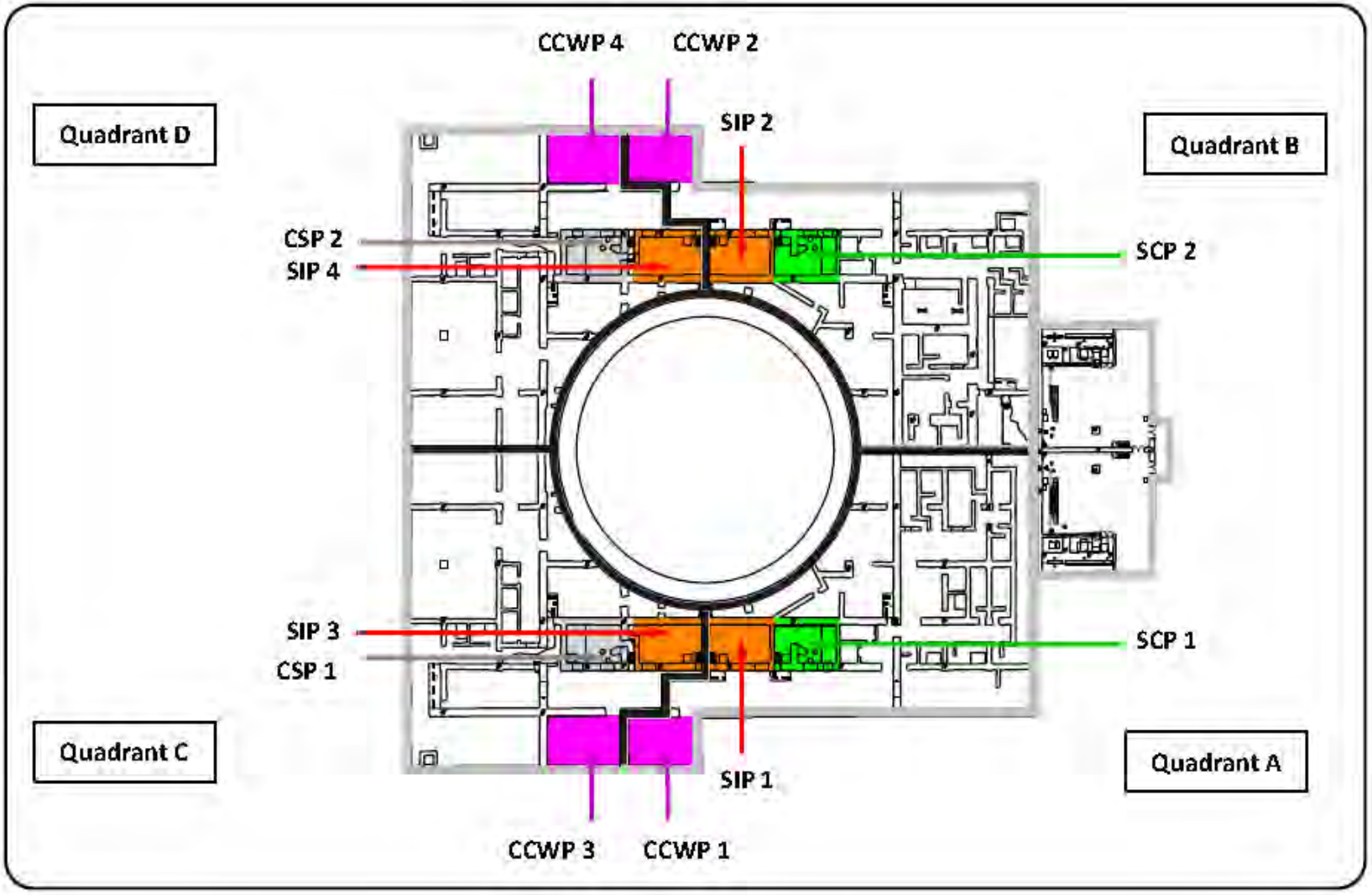


SIP : Safety Injection Pump
SCP : Shutdown Cooling Pump
CSP : Containment Spray Pump
CCWP : Component Cooling Water Pump

# Design Review Status

| Task | Description | Target Date |
|---|---|---|
| Phase Ⅰ | PSER and RAI<br>Completed | Feb. 2016<br>Jan. 29 2016 |
| Phase Ⅱ | SER with Open Items<br>(Underway) | Nov. 2016 |
| Phase Ⅲ | ACRS Review of SER with Open Items<br>(Underway) | Jun. 2017 |
| Phase Ⅳ | Advanced SER with No Open Items<br>(Underway) | Dec. 2017 |
| Phase Ⅴ | ACRS Review of Advanced SER with No Open Items | Jun. 2018 |
| Phase Ⅵ | Final SER with No Open Items | Sep. 2018 |

# Summary

- **The APR1400 adopted proven technologies from the operation of OPR1000.**
- **The APR1400 used safety analysis codes and methodologies of the certified System 80+.**
- **The APR1400 standard design approval was issued by Korean regulatory authority in 2002.**
  - The first unit of the APR1400, Shin-Kori Unit 3, has been constructed and its commercial operation is scheduled on October 2016.
- **The APR1400 is an essentially complete design.**

# Thank you

NON-PROPRIETARY

# APR 1400 DCA
# Chapter 2: Site Characteristics

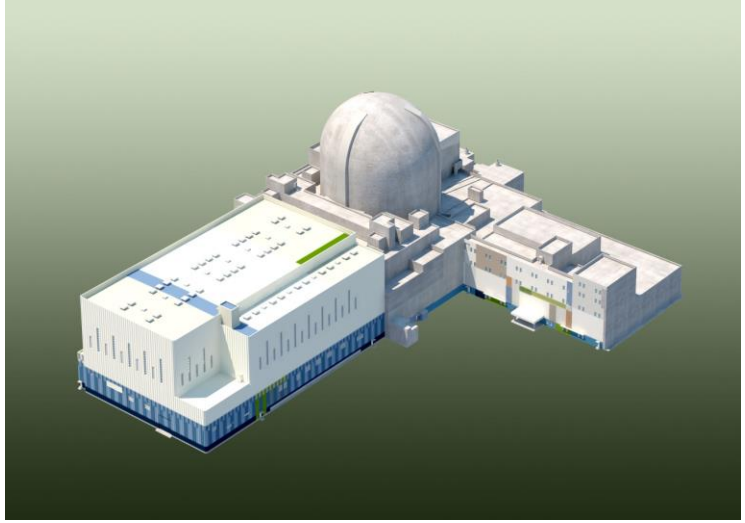

**KEPCO/KHNP**

**Sep. 21~22. 2016**

**Presented by: Kwang-Hoon Koh, Dong-Su Lee**

# Contents


- Overview of Chapter 2
  - List of Submitted Documents
  - RAI Summary
  - Scope
- Site Characteristics
  - Subsection Outline
  - List of RAIs
- Key Review Items
- Summary
- Attachments

# Overview of Chapter 2

## List of Submitted Documents

| Document No. | Title | Revision | Type | ADAMS Accession No. |
|---|---|---|---|---|
| APR1400-K-X-FS-14002 -P & NP | APR1400 Design Control Document Tier 2: Chapter 2 Site Characteristics | 0 | DCD | ML15006A041 |
| APR1400-K-X-IT-14001 -P & NP | APR1400 Design Control Document Tier 1 | 0 | DCD | ML15006A039 |

## RAI Summary

| No. of Questions | No. of Responses | Not Responded | No. of OI |
|---|---|---|---|
| 33 | 33 | 0 | 0 |

# Overview of Chapter 2

- **Scope**

  **This chapter provides the site interface requirements for the APR1400 Design including geological, seismological, hydrological and meteorological characteristics.**

  **The COLA is to confirm site characteristics are bounded, or provide site specific qualification.**

# Site Characteristics

- The APR1400 is designed on the basis of a set of assumed site-related parameters.
- The parameters were selected to include a range of potential nuclear power plant sites in the United States.
- Table 2.0-1 is a summary identifying specific site parameters for the APR1400 design. (Table provided attachment)

# Site Characteristics (cont.)

## Subsection Outline

| Section | Title | Description |
|---|---|---|
| 2.1 | Geography and Demography | Site Specific Characteristics<br><br>The COL applicant will provide site-specific Information * on the site location and a description of the site, exclusion authority and control, and population distribution, as stated in U.S. Nuclear Regulatory Commission (NRC) Regulatory Guide (RG) 1.206 |
| 2.2 | Nearby Industrial, Transportation, and Military Facilities | Site Specific Characteristics<br>See above |

* Complete list of COL Information Items for Chapter 2 is provided at end of presentation

# Site Characteristics (cont.)

- Subsection Outline (cont.)

| Section | Title | Description |
|---|---|---|
| 2.3 | Meteorology | 1. Snow (winter precipitation)<br><br>a. 100 year snowpack roof load(normal) : 2.873 kPa (60 psf)<br>b. Extreme winter precipitation roof load : 5.985 kPa (125 psf)<br>c. Depth of 48-hr probable maximum winter precipitation (PMWP) : 914.4 mm (36 inch)<br>d. Basis : HMR (NOAA), ASCE/SEI 7, EPRI URD |

# Site Characteristics (cont.)

- Subsection Outline (cont.)

| Section | Title | Description |
|---|---|---|
| 2.3 (cont'd) | Meteorology | 2. Extreme wind<br>a. 50 year 3-second wind gust speed : 64.8 m/s (145 mph), exposure category C<br>b. Importance factor : 1.15 for seismic category I/II structures<br>c. Basis : ASCE/SEI 7<br><br>3. Tornado<br>a. Maximum tornado wind speed : 102.8 m/s (230 mph)<br>b. Maximum translational speed : 20.6 m/s (46 mph)<br>c. Maximum rotational speed : 82.2 m/s (184 mph)<br>d. Radius of maximum rotational speed : 45.7 m (150 ft)<br>e. Maximum pressure differential : 8.274 kPa (1.2 psi)<br>f. Rate of pressure drop : 3.447 kPa/s (0.5 psi/s)<br>g. Basis : RG 1.76<br><br>4. Hurricane<br>a. Maximum 3-second wind gust speed : 116 m/s (260 mph)<br>b. Basis : RG 1.221 |

# Site Characteristics (cont.)

- Subsection Outline (cont.)

| Section | Title | Description |
|---|---|---|
| 2.3 (cont'd) | Meteorology | 5. HVAC outdoor design temperature<br><br>a. 5% exceedance values :<br>• maximum : 35.0°C (95°F) dry bulb,<br>25.0°C (77°F) coincident wet bulb<br>• minimum : -20.6°C (-5°F) dry bulb<br><br>b. 1% exceedance values :<br>• maximum : 37.8°C (100°F) dry bulb,<br>25.0°C (77°F) coincident wet bulb<br>• minimum : -23.3°C (-10°F) dry bulb<br><br>c. 0% exceedance values (historical limit excluding peak < 2 hours) :<br>• maximum : 46.1°C (115°F) dry bulb,<br>26.7°C (80°F) coincident wet bulb<br>• minimum : -40.0°C (-40°F) dry bulb |

# Site Characteristics (cont.)

## ➢ Subsection Outline (cont.)

| Section | Title | Description |
|---|---|---|
| 2.3 (cont'd) | Meteorology | 6. Ambient design temperature for cooling tower<br><br>a. 5% exceedance values for circulating water system<br><br>• maximum : 26.1°C (79°F) non-coincident wet bulb,<br>• minimum : -20.6°C (-5°F) dry bulb<br><br>b. 0% exceedance values for essential service water system (historical limit excluding peak < 2 hours)<br><br>• maximum : 27.2°C (81°F) non-coincident wet bulb<br>• minimum : -40.0°C(-40°F) dry bulb |

# Site Characteristics (cont.)

## ➢ Subsection Outline (cont.)

| Section | Title | Description |
|---|---|---|
| 2.3 (cont'd) | Meteorology | 7. Atmospheric dispersion factors<br>a. Purpose<br>• Dose to the public during normal operation<br>• Radiological consequence analyses for DBAs<br>• MCR/TSC habitability analysis<br><br>b. Regulatory Basis<br>• SRP 2.3.4 – 2.3.5 (Rev.3)<br>• RG 1.23 (Rev.1), 1.111 (Rev.1), 1.145 (Rev.1), 1.194<br><br>c. Bounding atmospheric dispersion factors and deposition factors at the offsite locations are presented in Table 2.0-1.<br><br>d. The 95$^{th}$ percentile on-site atmospheric dispersion factors for the MCR/TSC habitability analysis are presented in Table 2.3-2 through 2.3-12.<br><br>e. The input variables including post-accident gaseous vent and intake locations used for on-site χ/Qs are shown in Table 2.3-13 and Figure 2.3-1. |

# Site Characteristics (cont.)

## ➢ Subsection Outline (cont.)

| Section | Title | Description |
|---|---|---|
| 2.3 (cont'd) | Meteorology | 7. Atmospheric dispersion factors (cont'd)<br>f. Design features<br>• Long-term χ/Q & D/Q :<br>- Used the bounding values of 2.0E-05 s/m$^3$ for χ/Q and 2.0E-07 m$^{-2}$ for D/Q at EAB to bound most US sites<br>• Short-term χ/Q :<br>- Used 1.0E-03 s/m$^3$ at EAB based on EPRI-URD<br>• On-site χ/Q :<br>- Selected the most limiting meteorological condition among 6 U.S. NPP sites<br>- Added sufficient margin to envelope most of U.S. sites<br>- ARCON96 code is used |

# Site Characteristics (cont.)

## Postulated Site Parameter Values for APR1400 Compared to Corresponding Site Characteristics and Other Design Site Parameter Values

| Site / Design | Site Boundary Annual Average X/Q (s/m³) (No Decay/Undepleted) | Site Boundary Annual Average X/Q (s/m³) (2.26-Day Decay/Undepleted) | Site Boundary Annual Average X/Q (s/m³) (8.00-Day Decay/Depleted) | Site Boundary Annual Average D/Q (1/m²) (Relative Deposition) |
|---|---|---|---|---|
| APR1400 | 2.00E-05 | 1.99E-05 | 1.84E-05 | 2.00E-07 |
| | 805 m | 805 m | 805 m | 805 m |
| Fermi (RWB Vent Stack) | 1.10E-05 | 1.10E-05 | 1.00E-05 | 4.60E-08 |
| | 981 m | 981 m | 981 m | 772 m |
| South Texas Project | 8.10E-06 | 8.10E-06 | 7.30E-06 | 6.40E-08 |
| | 1,115 m | 1,115 m | 1,115 m | 1,115 m |
| V.C. Summer | 5.80E-06 | 5.80E-06 | 5.30E-06 | 1.60E-08 |
| | 805 m | 805 m | 805 m | 805 m |
| Vogtle | 5.50E-06 | 5.50E-06 | 5.00E-06 | 1.70E-08 |
| | 800 m | 800 m | 800 m | 800 m |
| Clinton ESP | 2.04E-06 | 2.04E-06 | 1.84E-06 | 1.46E-08 |
| | 1,025 m | 1,025 m | 1,025 m | 1,025 m |
| Grand Gulf ESP | 8.80E-06 | ---------- | ---------- | 1.20E-08 |
| | 1,368 m | ---------- | ---------- | 933 m |
| North Anna ESP | 3.70E-06 | 3.70E-06 | 3.30E-06 | 1.20E-08 |
| | 1,416 m | 1,416 m | 1,416 m | 998m |
| PSEG Nuclear ESP | 1.00E-05 | 1.00E-05 | 9.50E-06 | 4.10E-08 |
| | 386 m | 386 m | 386 m | 386 m |
| AP1000 DCD | <= 2.00E-05 | ---------- | ---------- | ---------- |
| | 805 | ---------- | ---------- | ---------- |

# Site Characteristics (cont.)

- Subsection Outline (cont.)

| Section | Title | Description |
|---|---|---|
| 2.4 | Hydrologic Engineering | 1.Groundwater and Flood elevation<br>a. Groundwater elevation :<br>0.61m (2 ft) below plant grade<br>b. Maximum level for flood :<br>0.3 m (1 ft) below plant grade<br>c. Basis : EPRI URD<br><br>2. Maximum rainfall precipitation rate (1 $mi^2$) :<br>a. hourly 492.7 mm (19.4 inch) per hour<br>b. short-term of 157.5 mm (6.2 inch) in 5 minutes<br>c. Basis : HMR (NOAA), EPRI URD |

# Site Characteristics (cont.)

## ➢ Subsection Outline (cont.)

| Section | Title | Description |
|---|---|---|
| 2.5 | Geology, Seismology, and Geotechnical Engineering | 1. SSE : 0.3g peak ground acceleration<br><br>2. CSDRS (Certified Seismic Design Response Spectra) :<br>a. SSE is based on CSDRS.<br>b. Enhanced spectra in high frequency range of RG 1.60 : Figure 2.0-1 and 2.0-2<br>• Frequency at the PGA is changed from 33 Hz to 50 Hz.<br>• Spectral amplitude at 25 Hz are set to RG 1.60 response spectra at 25 Hz scaled by factor 1.30<br>.<br>3. HRHF (Hard Rock High Frequency) RS:<br>a. Peak ground acceleration : 0.46g<br>b. Response spectra : Figure 2.0-3 and 2.0-4 |

# Site Characteristics (cont.)

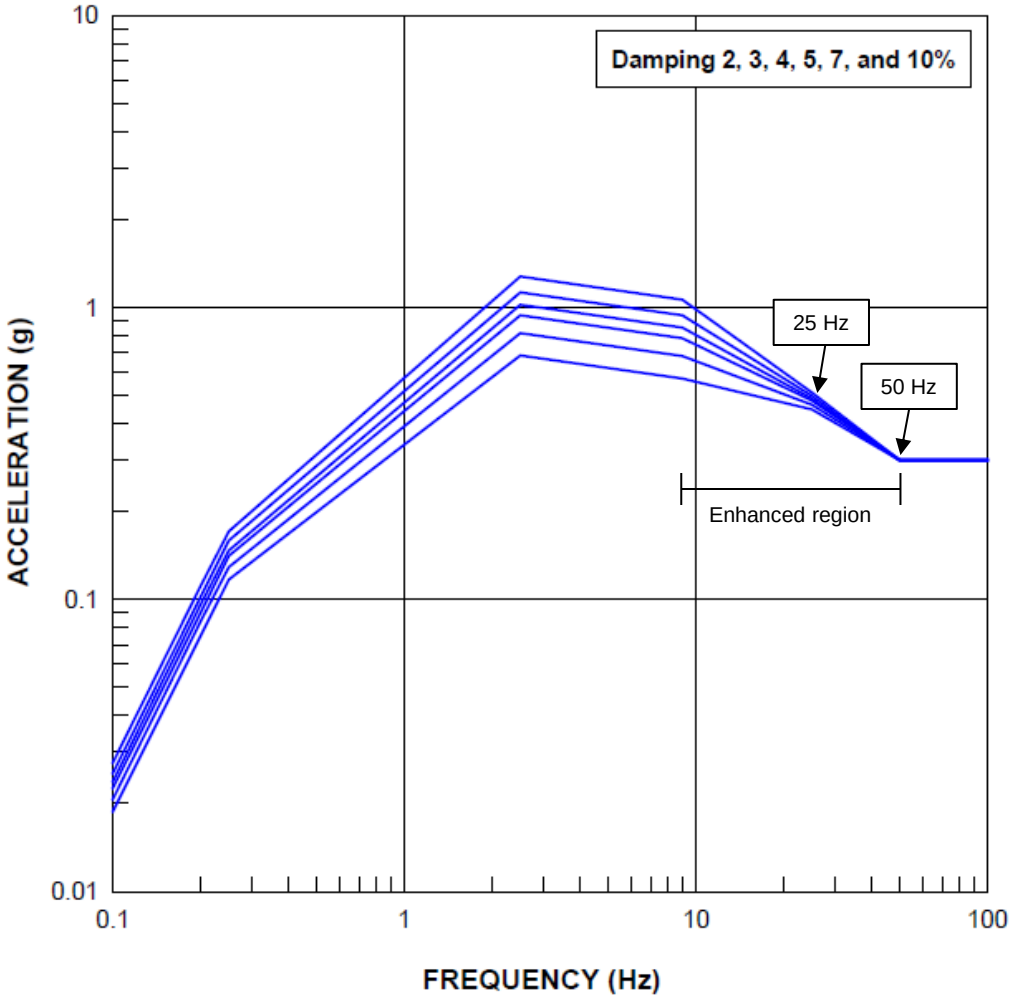


Figure 2.0-1 Horizontal Certified Seismic Design Response Spectra

# Site Characteristics (cont.)

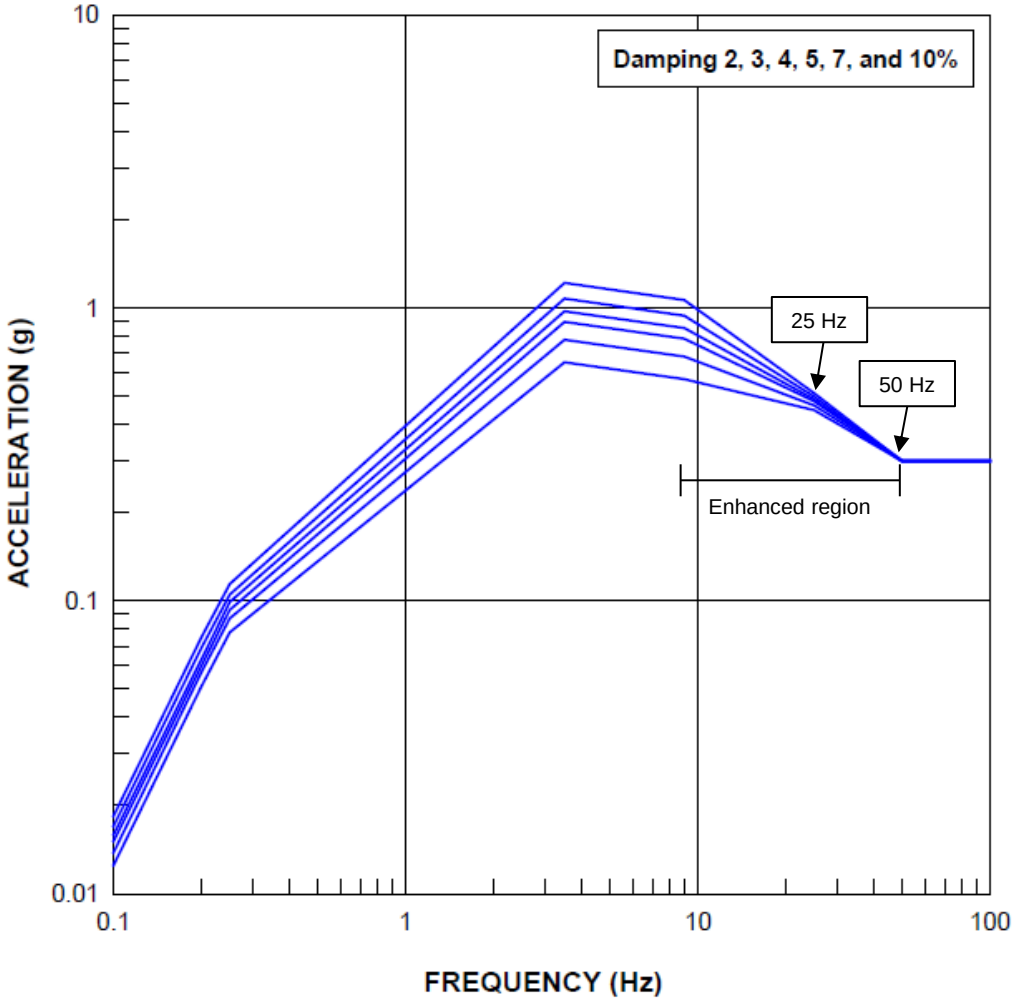


Figure 2.0-2 Vertical Certified Seismic Design Response Spectra

# Site Characteristics (cont.)

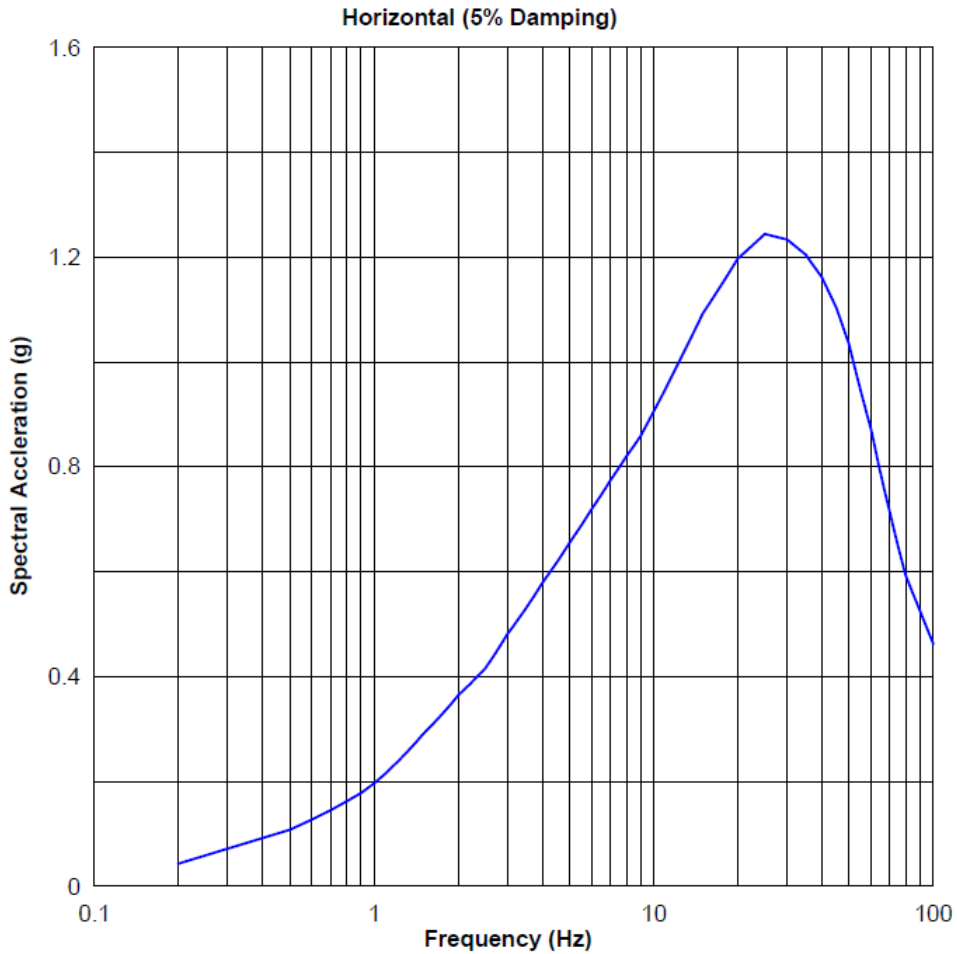


Figure 2.0-3 Horizontal HRHF Response Spectra

# Site Characteristics (cont.)

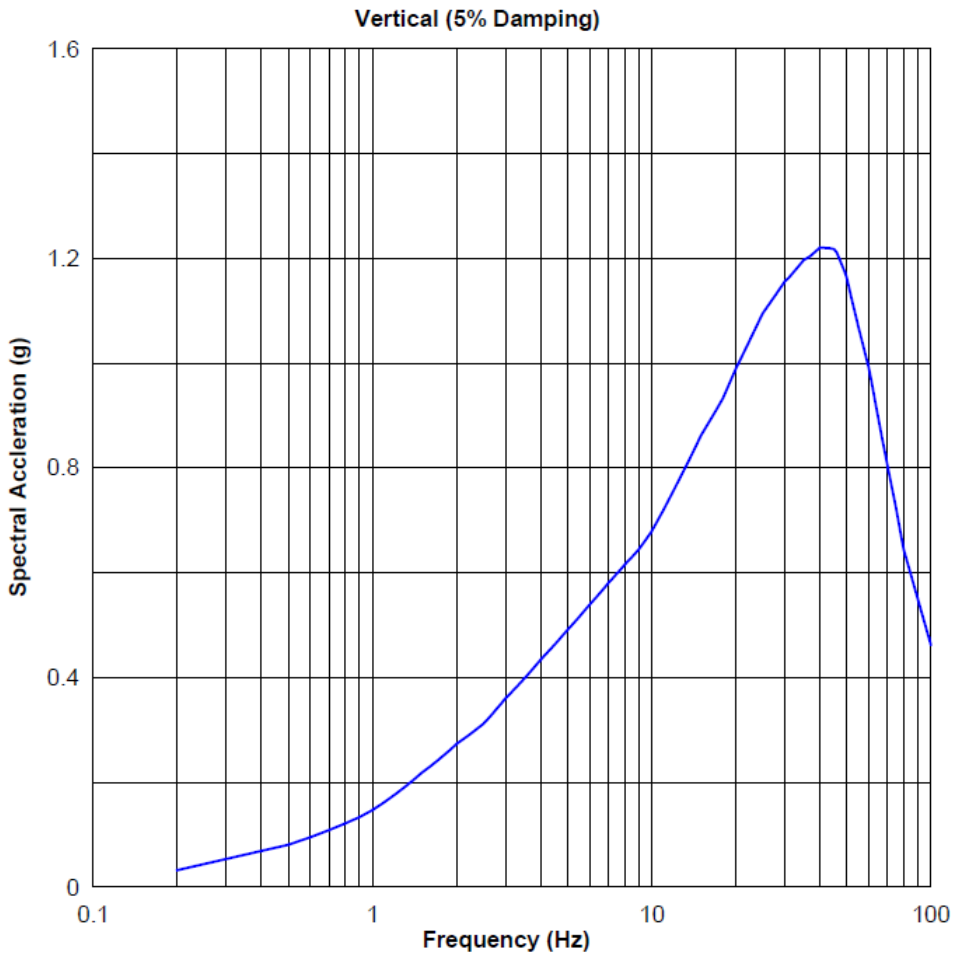


Figure 2.0-4 Vertical HRHF Response Spectra

# Site Characteristics (cont.)

- Subsection Outline (cont.)

| Section | Title | Description |
|---|---|---|
| 2.5 (cont'd) | Geology, Seismology, and Geotechnical Engineering | 4. Surface tectonic and nontectonic deformation at site :<br>a. The COL applicant will check the deformation potentials and confirm that the effects are within the design basis of the facility.<br><br>5. Maximum dip angle for soil uniformity : 20 deg.<br><br>6. Subsurface stability:<br>a. Minimum allowable static bearing capacity : 712 kPa (15,000 psf)<br>b. Minimum allowable dynamic bearing capacity, normal conditions plus SSE : 2872.8 kPa (60,000 psf)<br>c. Minimum shear wave velocity at SSE input at ground surface : 1,000 ft/s<br>d. Liquefaction potential : None (for Seismic Category I structures)<br>e. Minimum soil angle of internal friction : 35 degrees below the footprint of the Seismic Category I structures at their excavation depth |

# Site Characteristics (cont.)

## ➢ Subsection Outline (cont.)

| Section | Title | Description |
|---|---|---|
| 2.5 (cont'd) | Geology, Seismology, and Geotechnical Engineering | 7. Allowable settlement<br><br>a. Maximum allowable differential settlement inside building :<br>12.7 mmm (0.5 inch) per 15.24 m (50 ft) in any direction for the Seismic Category I structures<br><br>b. Maximum allowable differential settlement between buildings : 76.2mm (3.0 inch) between NI Common Basemat and EDG Building & DFOT Building, 12.7 mm (0.5 inch) between other adjacent buildings |

# Site Characteristics (cont.)

## ➢ Subsection Outline (cont.)

| Section | Title | Description |
|---|---|---|
| 2.5 (cont'd) | Geology, Seismology, and Geotechnical Engineering | 8. Backfill material<br><br>a. Density : 2.2 g/cm$^3$ (137 pcf)<br>b. Dynamic Poisson's ratio : 0.33<br>c. G/Gmax vs shear strain relation<br>d. Damping vs shear strain relation<br><br>Shear Strain(%) G/Gmax Damping (%)<br>----------<br>1.0 0.05 24.0<br>0.1 0.22 16.0<br>0.01 0.54 6.0<br>0.001 0.85 2.0<br>0.0001 1.00 1.0 |

# Site Characteristics (cont.)

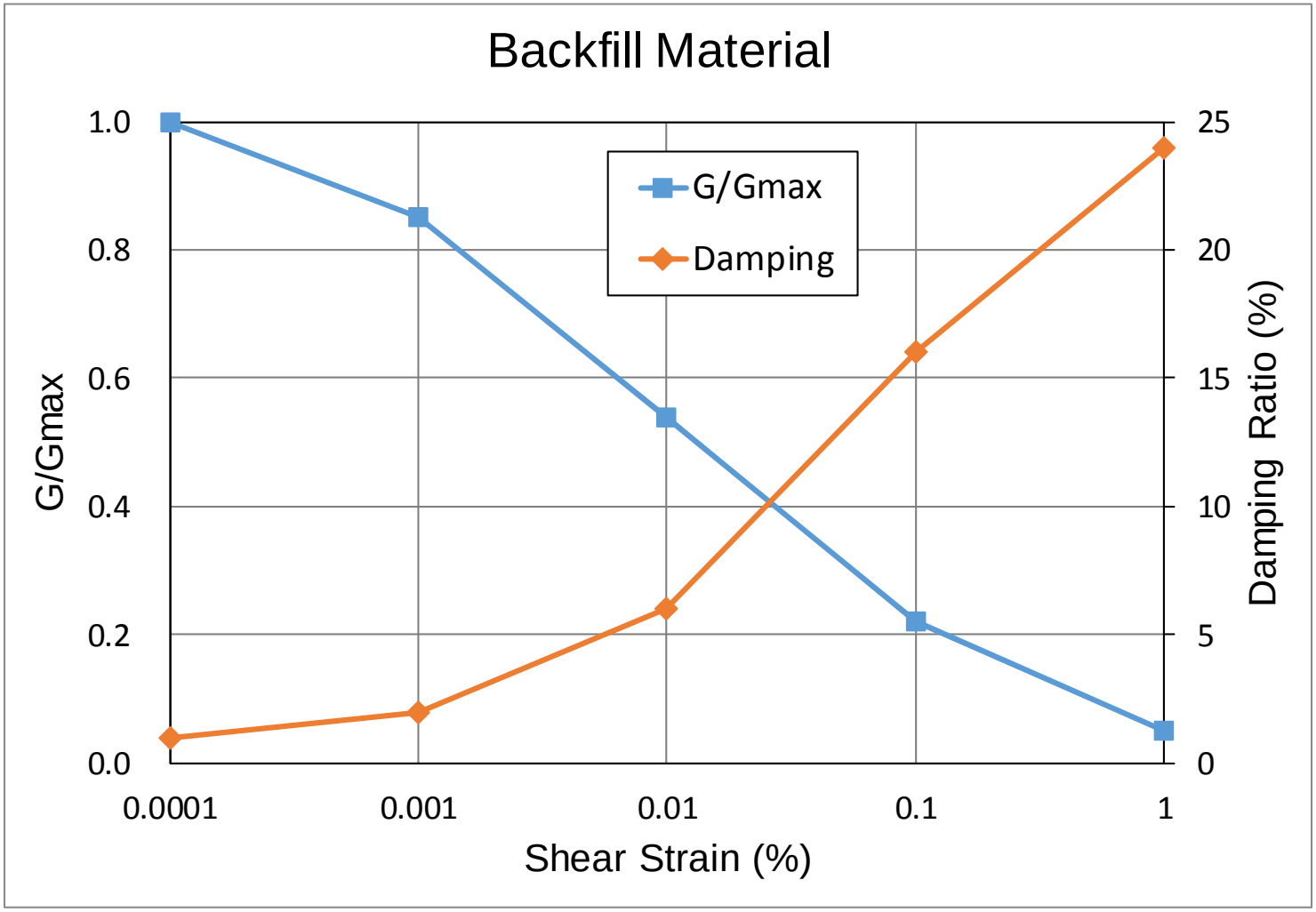


**<G/G$_{max}$ vs Shear Strain & Damping vs Shear Strain for Backfill>**

# Site Characteristics (cont.)

- List of RAIs

| RAI No. | Question No. | Description |
|---|---|---|
| 8012 | 02.03.01-1&2 | Update the parameter table |
| 8012 | 02.03.01-3 | HVAC design temperature in Table 2.0-1 |
| 8211 | 02.03.04-4 | MCR and TSC Location |
| 7912 | 02.03.04-3 | Offsite χ/Q Values |
| CQ* | 02.03.04-1 | Adding onsite χ/Q into Table 2.0-1 |
| 7912 | 02.03.04-2 | Request Met. Data |
| CQ* | 02.03.04-3 | Explanation of the Met. Data in Table 2.3-13 |
| 8211 | 02.03.04-5 | The source – receptor pairs and The most limiting Met. Data of 6 US sites. |
| 7912 | 02.03.04-1 | Revision of the all calculation without reduction factor of 2 |
| 7913 | 02.03.05-1 | Confirmation of the χ/Q and D/Q |

* CQ : Clarification Question

# Site Characteristics (cont.)

- List of RAIs (cont.)

| RAI No. | Question No. | Description |
|---|---|---|
| 8012 | 02.03.01-4 | Extreme winter precipitation roof load |
| 7827 | 02.05.04-1 | Soil Uniformity Requirement |
| 7827 | 02.05.04-2 | Dynamic bearing capacity |
| 7828 | 02.05.02-1 | Applicable NRC Reg. Guides |
| 7829 | 02.05.03-1 | Tectonic surface deformation |
| 7847 | 02.05.04-3 | Minimum soil angle of internal friction |
| 7847 | 02.05.04-4 | Minimum dynamic properties requirements for Structural Fill Granular |
| 7847 | 02.05.04-5 | Lean concrete backfill |
| 7847 | 02.05.04-6 | Minimum dynamic shear modulus |
| 7847 | 02.05.04-7 | Potential for Liquefaction |

# Site Characteristics (cont.)

- List of RAIs (cont.)

| RAI No. | Question No. | Description |
|---|---|---|
| 7847 | 02.05.04-8 | Static and dynamic parameter for EDG and DFOT |
| 7847 | 02.05.04-9 | Static and dynamic bearing demand and capacity |
| 7847 | 02.05.04-10 | Maximum differential settlement |
| 7848 | 02.05.02-3 | Soil profiles |
| 8018 | 02.05.05-1 | Stability of slope |

- ✓ All RAIs were address during the NRC Staff's review and no open items were identified .

# Key Review Items

- **RAI NO. 8012 Question 02.03.01-3a, NRC provided 8/4/15, KHNP addressed 11/4/15**
  - **Description of Issue** : NRC staff noted that almost all the COL and ESP applications previously reviewed identified 0-percent exceedance non-coincident wet-bulb temperatures greater than the corresponding site parameter value (81 ℉) for APR1400.
  - **Resolution :** NRC had certified the U.S. Advanced Boiling-Water Reactor design in May 1997 and had recently performed a detailed review of the U.S. Evolutionary Power Reactor (EPR) design, in which plants, 81 ℉ for the non-coincident wet-bulb temperature site parameter was used as part of the US ABWR certified design and as part of the US EPR review. KHNP stated that APR1400 design ambient temperature site parameters and values for all percent exceedance levels are the same as those specified in EPRI URD for Advanced Light Water Reactors. Therefore, the 0 percent exceedance wet bulb temperature of 27.2 °C (81 °F) used in the APR1400 DCD FSAR is reasonable and valid for use today.

# Key Review Items (cont.)

- **RAI NO. 7912 Question 02.03.04-1 Rev. 2, NRC provided 6/1/15, KHNP addressed 6/1/16**
  - **Description of Issue** : Since both the air intakes of the Aux. Building (No. 3 & 4 in the figure) are in the same wind direction window (i.e., within 90°) from the release point 7, the two intakes do not meet the criteria in RG 1.194 for a reduction factor of 2.
  - **Resolution** : KHNP updated the χ/Q calculation without credit of the reduction. The resultant MCR/TSC doses for all DBAs are within the acceptance criteria.

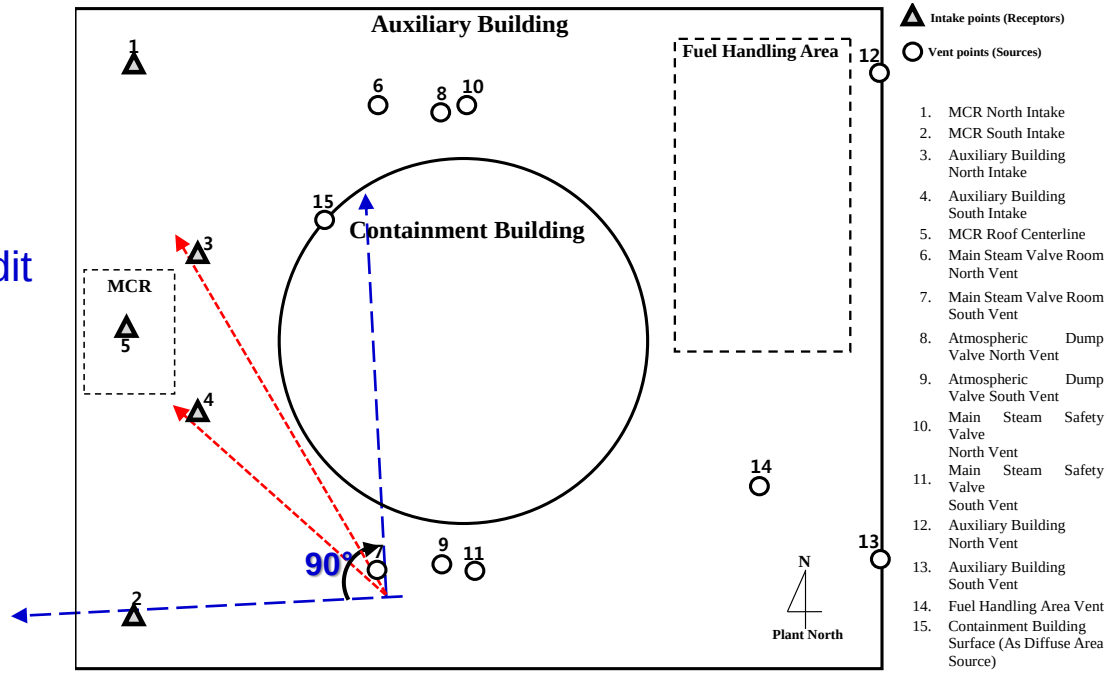


Figure 2.3-1 Locations of Post-accident Gaseous Vents and Intakes

# Summary

- Chapter 2 defines site parameters of the APR1400 standard plant and also identifies important site parameters.
- The COLA is to confirm that DCD site parameters envelope site-specific parameters.
- Table 2.0-1 identifies the site parameters for the APR1400 Design.

# Acronyms

- KHNP: Korea Hydro & Nuclear Power
- COL / COLA: Combined License / Combined License Applicant
- PMWP: Probable Maximum Winter Precipitation
- HMR: Hydrometeorological Report
- NOAA: National Oceanic and Atmospheric Administration
- ASCE: American Society of Civil engineers
- SEI: Structural Engineering Institute
- HVAC: Heating, Ventilation, and Air Conditioning
- MCR / TSC: Main Control Room / Technical Support Center
- DBA: Design Basis Accident
- SRP: Standard Review Plan
- RG: Regulatory Guide
- EAB: Exclusion Area Boundary
- SSE: Safe Shutdown Earthquake
- PGA: Peak Ground Accelaration
- G/Gmax: Shear Modulus of Soil/Maximum Shear Modulus of Soil

# Attachment

## ➢ Table 2.0-1 Site Parameters (1/4)

| Parameter Description | Parameter Value |
|---|---|
| Maximum Elevation of Groundwater | 0.61 m (2 ft) below plant grade [1] in the vicinity of the SSCs important to safety |
| Maximum Flood Elevation | 0.30 m (1 ft) below plant grade in the vicinity of the SSCs important to safety |
| Precipitation | |
| - Maximum precipitation rate (1 $mi^2$) | 492.7 mm (19.4 in.) over 1 hour<br>157.5 mm (6.2 in.) in 5 minutes |
| - 100-year snowpack roof load | 2.873 kPa (60 $lbf/ft^2$) |
| - Extreme winter precipitation roof load | 5.985 kPa (125 $lbf/ft^2$) |
| - Depth of 48-hour probable maximum winter precipitation (PMWP) | 914.4 mm (36 in.) |
| HVAC Outdoor Design Temperature[5] | |
| - 5 % exceedance values | |
| · Maximum | 35.0 °C (95 °F) dry bulb and 25.0 °C (77 °F) coincident wet bulb |
| · Minimum | -20.6 °C (-5 °F) dry bulb |
| - 1 % exceedance values | |
| · Maximum | 37.8 °C (100 °F) dry bulb and 25.0 °C (77 °F) coincident wet bulb |
| · Minimum | –23.3 °C (–10 °F) dry bulb |
| - 0 % exceedance values (historical limit excluding peaks < 2 hours) | |
| · Maximum | 46.1 °C (115 °F) dry bulb and 26.7 °C (80 °F) coincident wet bulb |
| · Minimum | –40.0 °C (–40 °F) dry bulb |
| Ambient Design Temperature for Cooling Tower | |
| - Ambient 5 % exceedance values for circulating water system (CWS) | |
| · Maximum | 26.1 °C (79 °F) non-coincident wet bulb |
| · Minimum | –20.6 °C (-5 °F) dry bulb |
| - Ambient 0 % exceedance values for essential service water system (ESWS)[5] (historical limit excluding peaks < 2 hours) | |
| · Maximum | 27.2 °C (81 °F) non-coincident wet bulb |
| · Minimum | –40.0 °C (–40 °F) dry bulb |

# Attachment

## ➢ Table 2.0-1 Site Parameters (2/4)

| Parameter Description | Parameter Value |
|---|---|
| Extreme Wind<br>- 50-year 3-second wind gust speed<br>- Importance factor | <br>64.8 m/s (145 mph)<br>1.15 (2) |
| Tornado Parameters<br>- Maximum horizontal wind speed<br>- Translational speed<br>- Rotational speed<br>- Radius of maximum rotational speed<br>- Maximum pressure differential<br>- Rate of pressure drop<br>- Missile spectra | <br>102.8 m/s (230 mph)<br>20.6 m/s (46 mph)<br>82.2 m/s (184 mph)<br>45.7 m (150 ft)<br>8.274 kPa (1.2 psi)<br>3.447 kPa/s (0.5 psi/s)<br>Table 2 (Region I) of NRC RG 1.76 (Reference 1) |
| Hurricane Parameters<br>- Maximum 3-second wind gust speed<br>- Missile spectra | <br>116 m/s (260 mph)<br>Table 1 of NRC RG 1.221 (Reference 2) |
| Accident Release $\chi/Q$ Values at exclusion area boundary (EAB)<br>· 0-2 hr | <br>$1.00 \times 10^{-3}$ s/m$^3$ |
| Accident Release $\chi/Q$ Values at low-population zone (LPZ)<br>· 0-8 hr<br>· 8-24 hr<br>· 24-96 hr<br>· 96-720 hr | <br>$2.20 \times 10^{-4}$ s/m$^3$<br>$1.60 \times 10^{-4}$ s/m$^3$<br>$1.00 \times 10^{-4}$ s/m$^3$<br>$8.00 \times 10^{-5}$ s/m$^3$ |
| Annual Average $\chi/Q$ Values at Site Boundary<br>· Undepleted/no decay<br>· Undepleted/2.26-day decay<br>· Depleted/8.00-day decay<br>· Relative deposition factor (D/Q) | <br>$2.00 \times 10^{-5}$ s/m$^3$<br>$1.99 \times 10^{-5}$ s/m$^3$<br>$1.84 \times 10^{-5}$ s/m$^3$<br>$2.00 \times 10^{-7}$ 1/m$^2$ |
| Inventory of radionuclides that could seep into the groundwater | See Table 11.2-9 |
| Safe Shutdown Earthquake (SSE) | 0.3 g peak ground acceleration |

# Attachment

## ➢ Table 2.0-1 Site Parameters (3/4)

| Parameter Description | Parameter Value |
|---|---|
| Certified Seismic Design Response Spectra (CSDRS) Referencing SSE | See Figures 2.0-1 and 2.0-2 |
| Hard Rock High Frequency (HRHF) Response Spectra(4) | 0.46g peak ground acceleration<br>See Figures 2.0-3 and 2.0-4 |
| Tectonic and Non-tectonic Surface Deformation Potential | See Subsection 2.5.3 |
| Allowable Static Bearing Capacity | The allowable static bearing capacity, including a factor of safety appropriate for the design load combinations, shall be greater than or equal to the maximum static bearing demand of 718.2 kPa (15 ksf). The allowable static bearing capacity is the value of ultimate bearing capacity divided by 3.0. |
| Allowable Dynamic Bearing Capacity | The allowable dynamic bearing capacity, including a factor of safety appropriate for the design load combinations, shall be greater than or equal to the maximum dynamic bearing demand of 2,872.8 kPa (60 ksf). The allowable dynamic bearing capacity is the value of ultimate bearing capacity divided by 2.0. |
| Minimum Factor of Safety for Slope on Static condition | 1.5 |
| Minimum Factor of Safety for Slope on Dynamic condition (SSE) | 1.2 |
| Minimum Shear Wave Velocity | 304.8 m/s (1,000 ft/s) |
| Maximum Dip Angle for Soil Uniformity | 20 degrees |
| Liquefaction Potential | See Subsection 2.5.4.8 |
| Maximum Allowable Differential Settlement inside Building | 12.7 mm (0.5 in.) per 15.24 m (50 ft) in any direction for the Seismic Category I structures |
| Maximum Allowable Differential Settlement between Buildings | 76.2 mm (3.0 in.) between NI Common Basemat and EDG Building & DFOT Building 12.7 mm (0.5 in.) between other adjacent buildings |
| Minimum Soil Angle of Internal Friction | Greater than or equal to 35 degrees below the footprint of the seismic Category I structures at their excavation depth |
| Slope Failure Potential (yes/no) | No |
| Backfill Material Density | 2.2 g/cm$^3$ (137 pcf) |

# Attachment

## ➢ Table 2.0-1 Site Parameters (4/4)

| Parameter Description | Parameter Value | | |
|---|---|---|---|
| Backfill Material Dynamic Poisson's Ratio | 0.33 | | |
| Backfill Material Dynamic Properties (Normalized Shear Moduli & Maximum Damping) (6) | Shear Strain(%) | $G/G_{max}$ | Damping (%) |
| | 1.0 | 0.05 | 24.0 |
| | 0.1 | 0.22 | 16.0 |
| | 0.01 | 0.54 | 6.0 |
| | 0.001 | 0.85 | 2.0 |
| | 0.0001 | 1.00 | 1.0 |
| Strain-compatible Minimum Shear-wave Velocity of Backfill | 155 m/s (510 fps) | | |

(1) Plant grade represents the level of ground adjacent to the nuclear island buildings and is established at a plant elevation 98 ft 8 in.

(2) 100-year recurrence interval: Value to be used for design of seismic Category I and II structures only.

(3) Bearing capacity is defined at the foundation level of the seismic Category I structures.

(4) The HRHF response spectra are provided for evaluation of site-specific ground motion response spectra which exceed the CSDRS in the high frequency range at hard rock sites.

(5) Degrees Fahrenheit (°F) are the main units and temperatures in Celsius (°C) are reference values that are converted from main units.

(6) The backfill material dynamic properties are used to calculate the shear-straincompatible shear wave velocity profiles for the backfill. The strain-compatible damping values of the backfill cannot be greater than 15%.

# Attachment

## List of COL Items (1/5)

| COL No. | Description |
|---|---|
| COL 2.0(1) | The COL applicant is to demonstrate that the APR1400 design meets the requirements imposed by the site-specific parameters and conforms with all design commitments and acceptance criteria if the characteristics of the site fall outside the assumed site parameters in Table 2.0-1. |
| COL 2.1(1) | The COL applicant is to provide site-specific information on the site location and description of the site, exclusion authority and control, and population distribution as stated in NRC RG 1.206. |
| COL 2.2(1) | The COL applicant is to provide site-specific information on nearby industrial, transportation, and military facilities as required in NRC RG 1.206 |
| COL 2.2(2) | The COL applicant is to identify the DBE caused by nearby industrial, transportation, and military facilities and determine its design parameters. |
| COL 2.3(1) | The COL applicant is to provide site-specific information on meteorology including regional climatology, local meteorology, onsite meteorological measurement program, estimated short-term atmospheric dispersion for accident release, and long-term atmospheric dispersion estimates for routine release as addressed in NRC RG 1.206. |
| COL 2.3(2) | The COL applicant is to perform the radiological consequence analysis and demonstrate that the related dose limits specified in 10 CFR 50.34 and GDC 19 are not exceeded, if the site-specific $\chi/Q$ values exceed the bounding values described in Tables 2.3-1 to 2.3-12. |
| COL 2.4(1) | The COL applicant is to provide the site-specific hydrologic information on probable maximum precipitation (PMP), probable maximum flood (PMF) of streams and rivers, potential dam failures, probable maximum surge and seiche flooding, probable maximum tsunami hazards, ice effects, cooling water canals and reservoirs, channel diversions, flood protection requirements, low water considerations, groundwater, potential accidental release of liquid effluents in ground and surface water, and Technical Specifications and emergency operation requirements in accordance with NRC RG 1.206, NRC RG 1.59, and NRC JLD-ISG-2012-06. |

# Attachment

## List of COL Items (2/5)

| COL No. | Description |
|---|---|
| COL 2.5(1) | The COL applicant is to provide the site-specific information on geology, seismology, and geotechnical engineering as required in NRC RG 1.206. The COL applicant is to conduct the probabilistic seismic hazard analysis (PSHA) and develop the site-specific GMRS using the PSHA results as required in NRC RG 1.208. |
| COL 2.5(2) | The COL applicant is to confirm that the FIRS of the nuclear island are completely enveloped by the CSDRS-compatible free-field response motions at the bottom elevation of the nuclear island for a site with the low-strain shear wave velocity greater than 304.8 m/s (1,000 ft/s) at the finished grade in the free field. Alternately, the COL applicant is to confirm that the FIRS of the nuclear island are completely enveloped by the CSDRS for a hard rock site with a low-strain shear wave velocity of supporting medium for the nuclear island greater than 2,804 m/s (9,200 ft/s). |
| COL 2.5(3) | The COL applicant is to confirm that (i) the requirement for the site-specific weight densities of subsurface soils is to be no less than 2,002.3 kg/m3 (125 lb/ft$^3$) and the site-specific strain-compatible soil hysteresis damping ratio profile is to be equal to or less than that shown in Table 3.7A-1; (ii) the profiles of site-specific soil properties (weight density, strain compatible soil shear and compression wave velocity, and strain-compatible soil hysteresis damping ratio) are generally increasing with depth from the ground surface in a manner similar to the general profile shapes shown in Tables 3.7A-1 through 3.7A-9 and Figures 3.7A-3 through 3.7A-11; (iii) the site-specific soil profiles have no inverse condition, i.e., the soil properties of a deeper soil layer are less than the properties of the soil layer above it; and (iv) the site-specific strain-compatible soil shear wave velocity profile, including backfill, is consistent with one of the APR1400 generic site conditions S1 through S9 considered for the standard design as shown in Tables 3.7A-1 through 3.7A-9 and Figures 3.7A-3 through 3.7A-11. |

# Attachment

## List of COL Items (3/5)

| COL No. | Description |
|---|---|
| COL 2.5(3) (cont'd) | The site specific upper bound and lower bound low-strain shear wave velocity profiles are to be bounded by the APR1400 generic low-strain shear wave velocity profiles S1 through S9 considered for the standard design. The lower bound and upper bound shear wave velocity profiles correspond to the Gmax/1.5 and 1.5Gmax of the site-specific low-strain soil shear modulus profile where Gmax is the low-strain maximum shear modulus. The lower bound low-strain shear wave velocity for the site-specific soil profile is not to be less than 304.8 m/s (1,000 ft/s) |
| COL 2.5(4) | The COL applicant is to confirm that the site-specific profile for a HRHF site is consistent with generic soil profile S9 and the site-specific GMRS determined at the finished grade are completely enveloped by the APR1400 HRHF response spectra shown in Figures 3.7-12 and 3.7-13. In addition, the COL applicant is to confirm that the FIRS of the seismic Category I structures are completely enveloped by the HRHF-compatible free-field response motions at the bottom elevation of each seismic Category I structure. |
| COL 2.5(5) | The COL applicant is to perform a site-specific seismic analysis to develop in-structure response spectra at key locations, strain-compatible properties, embedment and extent of backfill using the procedure described in Appendix 3.7A if COL 2.5(2) and COL 2.5(3) above are not met. In addition, the COL applicant is to confirm that the site-specific 5% damped in-structure response spectra so generated are enveloped by the corresponding 5% damped in-structure response spectra provided in Appendix 3.7A. |
| COL 2.5(6) | The COL applicant is to perform a site-specific seismic response analysis using the procedure described in Appendix 3.7B and the EPRI White Paper "Seismic Screening of Components Sensitive to High Frequency Vibratory Motions" (Reference 6), if COL 2.5(4) is not met. |

# Attachment

## List of COL Items (4/5)

| COL No. | Description |
|---|---|
| COL 2.5(7) | The COL applicant is to perform an evaluation of the subsurface conditions within the standard plant structure footprint based on the geologic investigation in accordance with NRC RG 1.132. |
| COL 2.5(8) | The COL applicant is to confirm that the dynamic properties of SFG to be used in construction of the APR1400 seismic Category I structures and compressive strength of lean concrete under the nuclear island basemat satisfy the SFG requirements provided in Table 2.0-1 and minimum compressive strength of 140 kg/cm2 (2,000 psi). |
| COL 2.5(9) | The COL applicant is to evaluate the potential future surface deformation of tectonic and non-tectonic origin. |
| COL 2.5(10) | If the potential for future surface deformation exists, the COL applicant needs to demonstrate the potential effects of surface deformation are within the design basis of the facility. |
| COL 2.5(11) | The COL applicant will evaluate the allowable bearing capacity of the subsurface based on the site-specific properties of the underlying materials, including appropriate laboratory test data to evaluate strength, and considering local site effects, such as fracture spacing, variability in properties, and evidence of shear zones. If the site-specific allowable bearing capacity is less than the maximum bearing demands specified in Table 2.0-1, a site-specific evaluation shall be performed by a COL applicant using the APR1400 basemat model and methodology described in subsection 3.8.5. |
| COL 2.5(12) | The COL applicant will verify whether the predicted settlement exceeds settlements within each building and between buildings exceed the maximum differential settlement within building specified in Table 2.0-1 or not. If the predicted settlement exceeds the maximum value in Table 2.0-1, a detailed site specific evaluation shall be performed by a COL applicant using the APR1400 basemat model and methodology described in subsection 3.8.5 to demonstrate acceptable. |

# Attachment

## ➢ List of COL Items (5/5)

| COL No. | Description |
|---|---|
| COL 2.5(13) | The COL applicant is to evaluate the potential for liquefaction occurring at the site adjacent to and under seismic Category I structures in accordance with NRC RG 1.198. In addition, the COL applicant is to evaluate the liquefaction potential for those seismic Category II structure foundations that if failed, could degrade the function of a seismic Category I SSC to an unacceptable safety level. |
| COL 2.5(14) | The COL applicant is to provide site-specific information about the static and dynamic stability of all natural and man-made soil and rock slopes including embankments and dams. |
| COL 2.5(15) | The COL applicant is to confirm that the soil angle of internal friction below the footprint of the seismic Category I structures at their excavation depth is a minimum of 35 degrees. |

U.S.NRC

United States Nuclear Regulatory Commission

*Protecting People and the Environment*

U.S.NRC

United States Nuclear Regulatory Commission

*Protecting People and the Environment*

# Presentation to the ACRS Subcommittee

## Korea Hydro Nuclear Power Co., Ltd (KHNP)

## APR1400 Design Certification Application Review

### Safety Evaluation Report with open Items

### Chapter 2: SITE CHARACTERISTICS

September 21, 2016

# Presentation Contents

- Staff Review Team
- Overview of Design Certification Application
- Technical Areas of Interest
  - 2.1 Geography and Demography
  - 2.2 Nearby Industrial, Transportation, and Military Facilities
  - 2.3 Meteorology ( will be presented on October 4, 2016)
  - 2.4 Hydrologic Engineering
  - 2.5 Geology, Seismology, and Geotechnical Engineering

# ACRONYMS

- ADAMS- Agencywide Documents Access & Management System
- CFR- Code of Federal Regulation
- COL- Combined License
- DC - Design Certification
- DBA- Design Basis Accident
- DBE- Design Basis Event
- DCD- Design Control Document
- D/Q- Relative Deposition Factor ($1/m^2$)
- EAB – Exclusion Area Boundary
- EPRI- Electric Power Research Institute
- ESP- Early Site Permits
- FSAR- Final Safety Analysis Report
- GDC-General Design Criterion

# ACRONYMS

- ISG- Interim Staff Guidance
- ITAAC- Inspections, tests, analyses, and acceptance criteria
- KHNP- Korea Hydro & Nuclear Power
- LPZ- Low Population Zone
- OI- Open Item
- PMWP- Probable Maximum Winter Precipitation
- RAI- Request for Additional Information
- RG- Regulatory Guide
- SAR- Safety Analysis Report
- SE- Safety Evaluation
- SRP- Standard Review Plan
- SSC- Structures Systems and Components
- URD- Utility Requirements Documents
- $\chi$/Q – Atmospheric Dispersion Factor (sec/m$^3$)

- **Technical Staff Presenters**
  - **Seshagiri Tammara- DCD Section 2.1 and 2.2**
    Radiation Protection and Accident Consequences Branch
  - **Michael Lee- DCD Section 2.4**
  - Hydrology & Meteorology Branch
  - **Ricardo Rodriguez- DCD Section 2.5**
    Geoscience and Geotechnical Engineering Branch
- **Project Managers**
  - **Jeff Ciocco – Lead PM**
  - **Tarun Roy– Chapter PM**

# Staff Review Team

- **Seshagiri Tammara**
  Radiation Protection and Accident Consequences Branch
- **Michael Lee**
  Hydrology and Meteorology Branch
- **Ricardo Rodriguez**
  Geoscience and Geotechnical Branch
- **Stephanie Devlin-Gill**
  Geoscience and Geotechnical Branch
- **David Heeszel**
  Geoscience and Geotechnical Branch
- **Luissette Candelario**
  Geoscience and Geotechnical Branch

# Overview of Design Certification Application

| SRP Section/Application Section | | Number of RAI Questions | Number of SE Open Items |
|---|---|---|---|
| 2.0 | Site Characteristics | 0 | 0 |
| 2.1 | Geography and Demography | 0 | 0 |
| 2.2 | Nearby Industrial, Transportation, and Military Facilities | 0 | 0 |
| 2.3 | Meteorology | 10 | 0 |
| 2.4 | Hydrologic Engineering | 0 | 0 |
| 2.5 | Geology, Seismology, and Geotechnical Engineering | 23 | 0 |
| Totals | | 33 | 0 |

# Technical Topics of Interest

## Section 2.1 - Geography and Demography

United States Nuclear Regulatory Commission
*Protecting People and the Environment*

**Section 2.1 - Geography and Demography**

- The review involves the following sections of the KHNP APR 1400 DCD:
  - 2.1.1 - Site Location and Description
  - 2.1.2 - Exclusion Area Authority and Control
  - 2.1.3 - Population Distribution

The COL applicant is to provide this site specific information as part of COL information Item 2.1(1) in the COL application.

# Technical Topics of Interest

## Section 2.2 - Nearby Industrial, Transportation, and Military Facilities

U.S.NRC
United States Nuclear Regulatory Commission
*Protecting People and the Environment*

**Section 2.2 - Nearby Industrial, Transportation, and Military Facilities**

- The review involves the following sections of the KHNP APR 1400 DCD:
  - 2.2.1 - Locations and Routes
  - 2.2.2 - Descriptions
  - 2.2.3 - Evaluation of Potential Accidents

The COL applicant is to provide this site specific information as part of COL information Item 2.2(1) and COL information Item 2.2(2) in the COL application.

# Technical Topics of Interest
## Section 2.4 -Hydrologic Engineering

U.S.NRC
United States Nuclear Regulatory Commission
*Protecting People and the Environment*

**Section 2.4 – Hydrologic Engineering**

- The review involves the following sections of the APR 1400 DCD:
  - 2.4.1 Hydrologic Description
  - 2.4.2 Floods
  - 2.4.3 Probable Maximum Flood on Streams and Rivers
  - 2.4.4 Potential Dam Failures
  - 2.4.5 Probable Maximum Surge and Seiche Flooding
  - 2.4.6 Probable Maximum Tsunami Hazards
  - 2.4.7 Ice Effects
  - 2.4.8 Cooling Water Canals and Reservoirs
  - 2.4.9 Channel diversion
  - 2.4.10 Flooding Protection Requirements
  - 2.4.11 Low Water Considerations
  - 2.4.12 Groundwater
  - 2.4.13 Accidental Release of Radioactive Liquid Effluents in Ground and Surface Water
  - 2.4.14 Technical Specifications and Emergency Operations Requirements
  - 2.4.15 Combined License Information

# Technical Topics of Interest
## Section 2.4 -Hydrologic Engineering

U.S.NRC
United States Nuclear Regulatory Commission
*Protecting People and the Environment*

- Information in all the sections is site specific and will be provided by the COL applicant.
- Hydrologic Parameters
  - The DCD applicant identified the following hydrologic parameters:
    - Maximum groundwater level ( 2 ft below finished grade)
    - Maximum flood (tsunami) level (1 ft below finished grade)
    - Maximum hourly rainfall rate (19.4 in/hr.)
    - Maximum short-term rainfall rate (6.2 in/5 min.)
- A COL applicant needs to demonstrate that its site characteristics fall within the APR 1400 DCD site parameters
- Staff previously evaluated these parameters to determine the acceptability of the parameter values

# Technical Topics of Interest
## Section 2.4 -Hydrologic Engineering

U.S.NRC
United States Nuclear Regulatory Commission
*Protecting People and the Environment*

- COL Information Item 2.4(1)
  - COL applicant is to provide sufficient information to verify that hydrologic-related events will not affect the safety-basis for the APR 1400
  - COL applicant is to characterize the potential flooding hazards that may affect proposed reactor site
  - COL applicant decides on what combination of design features (i.e., elevation of door openings, the addition of fill, passive drainage systems, berms, administrative procedures) will be used to mitigate effects of any potential flooding hazard proposed reactor site.

# Conclusion
## Section 2.4 – Hydrologic Engineering

U.S.NRC
United States Nuclear Regulatory Commission
*Protecting People and the Environment*

- The DCD Applicant has provided plant specific hydrological site parameters and the Staff finds those acceptable.
- The DCD Applicant has properly identified the site specific information to be provided as part of any future COL application.
- The Applicant has satisfactorily answered all earlier RAI's and there are no open items.

# Technical Topics of Interest

## Section 2.5 – Geology, Seismology, and Geotechnical Engineering

- The review involved the following sections of the APR 1400 DCD:
  - 2.5.1 Basic Geologic and Seismic Information
  - 2.5.2 Vibratory Ground Motion
  - 2.5.3 Surface Deformation
  - 2.5.4 Stability of Subsurface Materials and Foundations
  - 2.5.5 Stability of Slopes

# Technical Topics of Interest

## Section 2.5 – Geology, Seismology, and Geotechnical Engineering

- Establishes site parameters for a candidate site, including:
  - Maximum allowable bearing demand
  - Minimum shear wave velocity
  - Allowable settlements (total, differential)
  - No liquefaction potential for seismic category I structures
  - No surface tectonic deformation potential within the exclusion area boundary

- These parameters are expected to be representative of a potential COL or ESP site.

# Technical Topics of Interest

## Section 2.5 – Geology, Seismology, and Geotechnical Engineering

- Sections 2.5.1, 2.5.2 and 2.5.3 findings:
  - DCD requires that site specific geology considerations are addressed by COL applicants in accordance with applicable regulations
  - DCD requires COL applicants to conduct site specific PSHA and site response analysis in accordance with relevant regulations
  - Site specific subsurface profiles are compared to generic profiles in DCD to ensure that parameters in DCD Chapter 3.7 analyses are relevant to COL sites
  - DCD requires that COL applicants show no potential for tectonic or non-tectonic surface deformation at the site

# Technical Topics of Interest

## Section 2.5 – Geology, Seismology, and Geotechnical Engineering

- Sections 2.5.4 and 2.5.5 findings:
  - The majority of staff RAIs focused on:
    - Soil or rock uniformity requirements
    - Applicability of static and dynamic parameters of the subsurface, including the SFG (structural fill granular) and lean concrete backfill
    - Clarifications regarding the calculation of bearing capacity and settlement for safety related structures
    - Liquefaction potential adjacent to and under Seismic Category I structures
    - Static and dynamic stability of all natural and man made slopes
- The applicant adequately addressed all RAIs. In many instances, tasked any future COL applicant to address pertinent issues during the COL application process through Information Items

# Technical Topics of Interest

## Section 2.5 – Geology, Seismology, and Geotechnical Engineering

U.S.NRC
United States Nuclear Regulatory Commission
*Protecting People and the Environment*

Staff Conclusions

- No Open Items identified in Chapter 2.5
- 15 Information Items identified in Chapter 2.5 adequately represent the actions need to be taken by potential COL applicants
- The applicant properly identified appropriate geologic, seismologic and geotechnical site parameters and properly identified the site specific information to be provided as part of any future COL application.
- 10 Confirmatory Items are currently being tracked by the staff

# Questions?

NON-PROPRIETARY

# APR1400 DCA
# Chapter 5: Reactor Coolant System and Connecting Systems

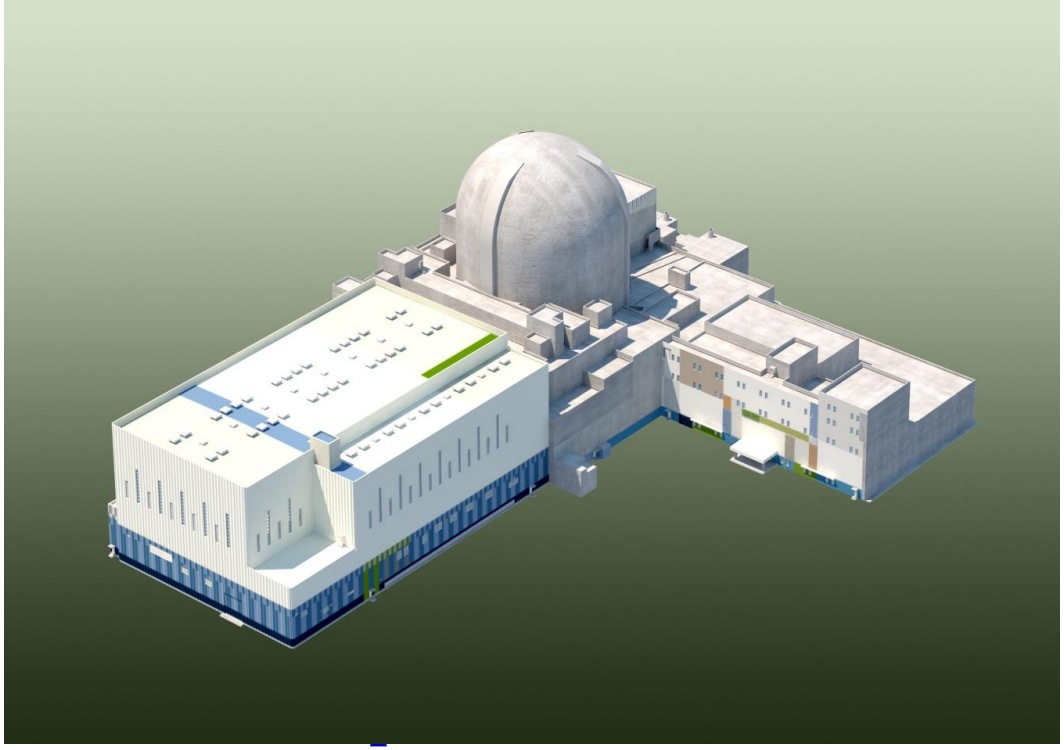

**KEPCO/KHNP**

**September 21~22, 2016**

*ACRS Meeting (Sep.21-22. 2016)*

# Contents


- Overview of Chapter 5
  - List of Submitted Documents
  - RAI Summary
  - Section Overview
- Reactor Coolant System and Connecting Systems
  - Key Design Features
  - Description of Open Item
- Summary
- Current Status
- Attachments
  - Acronym
  - List of COL Items

# Overview of Chapter 5

## ● List of Submitted Documents

| Document No. | Title | Revision | Type | ADAMS Accession No. |
|---|---|---|---|---|
| APR1400-K-X-FS-14002 -P & NP | APR1400 Design Control Document Tier 2: Chapter 5 Reactor Coolant System and Connecting Systems | 0 | DCD | ML15006A044 |
| APR1400-K-X-IT-14001 -P & NP | APR1400 Design Control Document Tier 1 | 0 | DCD | ML15006A039 |
| APR1400-Z-A-NR-14015 -P & NP | Neutron Fluence Calculation Methodology for Reactor Vessel | 0 | TER* | ML15009A124 |
| APR1400-Z-M-NR-14008 -P & NP | Pressure-Temperature Limits Methodology for RCS Heatup and Cooldown | 0 | TER (IBR**) | ML15009A125 |
| APR1400-A-M-NR-14001 -P & NP | KHNP APR1400 Flywheel Integrity Report | 0 | TER | ML15009A126 |
| APR1400-E-N-NR-14005 -P & NP | Shutdown Evaluation Report | 0 | TER | ML15128A285 |

* TER: Technical Report, **IBR: Incorporated by Reference

## ● RAI Summary

| No. of Questions | No. of Responses* | Not Responded | No. of Open Items |
|---|---|---|---|
| 77 | 77 | 0 | 13 |

* The responses to 6 RAIs for RCP flywheel were submitted after the issue of SE (Sep. 12, 2016).

# Overview of Chapter 5

## ● Section Overview

| Section | Major Contents | Presenter |
|---|---|---|
| 5.1 Summary Description | Design Features of the Reactor Coolant System (RCS) | Minseok KIM |
| | | |
| 5.2 Integrity of Reactor Coolant Boundary (RCPB) | Describes the measures that provide and maintain the integrity of the RCPB throughout the facilities design life | |
| 5.2.1 | Conformance with Codes and Code Cases | Minseok KIM |
| 5.2.2 | Overpressure Protection | Minseok KIM |
| 5.2.3 | Reactor Coolant Pressure Boundary Materials | Jongsoo KIM |
| 5.2.4 | In-service Inspection and Testing | Jongsoo KIM |
| 5.2.5 | RCPB Leakage Detection | Minseok KIM |
| 5.3 Reactor Vessel | Describes Reactor Vessel Material Issues | |
| 5.3.1 | Reactor Vessel Materials | Jongsoo KIM |
| 5.3.2 | P-T limits, Pressurized Thermal Shock, Upper-Shelf Energy | Seognam CHOI |
| 5.3.3 | Reactor Vessel Integrity | Jongsoo KIM |
| 5.4 RCS Component and Subsystem Design | Describes the Reactor System Components | |
| 5.4.1 | Reactor Coolant Pumps (RCPs) | Minseok KIM |
| 5.4.2 | Steam Generators (SGs) | Seognam CHOI |
| 5.4.7 | Shutdown Cooling System (SCS) | Minseok KIM |
| 5.4.10 | Pressurizer | Seognam CHOI |
| 5.4.12 | RCS High Point Vents | Minseok KIM |
| 5.4.15 | Component Supports | Seognam CHOI |

# Reactor Coolant System and Connecting Systems

## 5.1 Summary Description (1/3)

- **Design Features of APR1400**
  - **Design Life:** 60 Years
  - **Power:** 4,000 MWth / 1,400 MWe
  - **Two Loops:** Symmetric
    - ✓ 1 RV, 2 SGs, 4 RCPs, 1 Pressurizer
    - ✓ 2 Hot Legs, 4 Cold Legs
  - **Primary Operating Condition:**
    - ✓ Pressure: 2,250 psia
    - ✓ NOP Hot / Cold Temp.: 615 / 555 $^{o}$F
  - **Secondary Operating Condition:**
    - ✓ Pressure: 1,000 psia
    - ✓ MF/MS Temp.: 450 / 545 $^{o}$F
  - **SG Tube:** 13,102 /SG, Alloy 690TT
  - **Pressurizer:** 2,400 ft$^3$

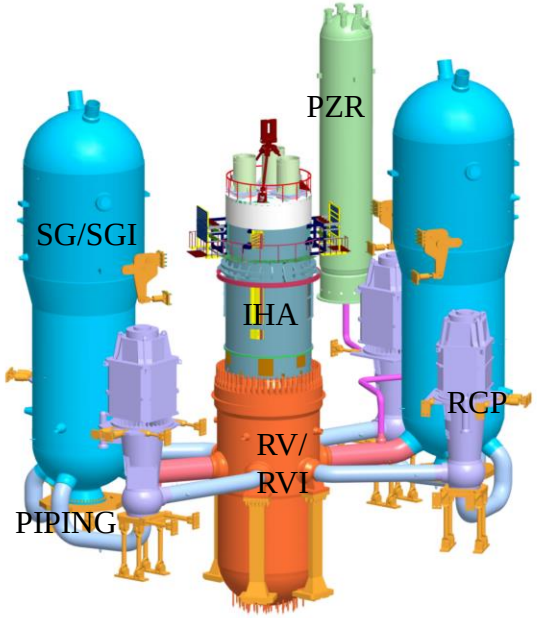


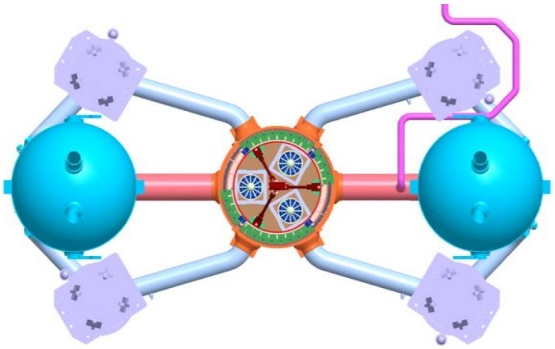

# Reactor Coolant System and Connecting Systems

## 5.1 Summary Description (2/3)

### RCS Functions

- Energy transfer from the reactor core to the steam generator
- Secondary barrier to the release of fission products
- Sufficient cooling during all normal plant operations and expected transients
- Reactor coolant circulation with the required chemistry & boron concentration
- System pressure control to a moderate extent through sprays
- Rapid depressurization of the RCS by manual operation of POSRVs
- Venting of steam and non-condensable gases

# Reactor Coolant System and Connecting Systems

## 5.1 Summary Description (3/3)

➢ **Principal Parameters of the RCS (Table 5.1.1-1)**

| Parameter | Value |
|---|---|
| Design thermal power, MWt (including net heat addition from pumps) | 4,000 |
| Design pressure, kg/cm$^2$A (psia) | 175.8 (2,500) |
| Design temperature (except pressurizer), °C (°F) | 343.3 (650) |
| Pressurizer design temperature, °C (°F) | 371.1 (700) |
| Coolant flow rate, kg/hr (lbm/hr) | $75.6 \times 10^6$ ($166.6 \times 10^6$) |
| Cold leg temperature, operating, °C (°F) | 290.6 (555) |
| Average temperature, operating, °C (°F) | 307.2 (585) |
| Hot leg temperature, operating, °C (°F) | 323.9 (615) |
| Normal operating pressure, kg/cm$^2$A (psia) | 158.2 (2,250) |
| System water volume, m$^3$ (ft$^3$) (with pressurizer) | 455.3 (16,079) |
| Pressurizer water volume, m$^3$ (ft$^3$) (full power) | 33.2 (1,171) |
| Pressurizer steam volume, m$^3$ (ft$^3$) (full power) | 35.7 (1,260) |

# Reactor Coolant System and Connecting Systems

## 5.2.1 Conformance with Codes and Code Cases

### Conformance with 10 CFR 50.55a

- Construction: ASME Section III 2007 Edition with 2008 Addenda
  - RCPB components - Class 1 components
  - RCPB components that meet the exclusion requirements - Class 2 components
  - The remaining safety-related components - Class 3 components
- ISI: ASME Section XI 2007 Edition with 2008 Addenda (Sections 5.2.4 and 6.6)
- IST: ASME OM Code 2004 Edition with 2005 and 2006 Addenda – Section 3.9.6

### Compliance with Applicable Code Cases

- RG 1.84, Design, Fabrication and Materials Code Case Acceptability, ASME Section III, Rev. 36, U.S. Nuclear Regulatory Commission, August 2014.
- RG 1.147, In-service Inspection Code Case Acceptability, ASME Section XI, Division 1, Rev. 17, U.S. Nuclear Regulatory Commission, August 2014.
- RG 1.192, Operation and Maintenance Code Case Acceptability, ASME OM Code, Rev. 1, U.S. Nuclear Regulatory Commission, August 2014.

# Reactor Coolant System and Connecting Systems

## 5.2.2 Overpressure Protection (1/4)

- **Overpressure Protection of the RCS and Steam Generators**
  - Pilot-operated safety relief valves (POSRVs)
  - Main steam safety valves (MSSVs)
  - Reactor protection system (RPS)
- **Maintain the RCS pressure below 110 percent of design pressure during the worst-case loss-of-load event with a delayed reactor trip**
- **Low Temperature Overpressure Protection (LTOP)**
  - Shutdown cooling system (SCS) suction line relief valve

# Reactor Coolant System and Connecting Systems

## 5.2.2 Overpressure Protection (2/4)

### Pressurizer POSRV

- Main Valve (1)
- Spring Loaded Pilot Valve (SLPV) (2)
  - ✓ Automatic actuation for RCS overpressure protection
- Motor Operated Pilot Valve (2)
  - ✓ Manual actuation for RCS rapid depressurization
- Pilot-Operated Pressure Relief Valves are Permitted by ASME Sec.III NB-7174 as Pressure Relief Device
  - ✓ Meeting the requirements of NB-7520
- ASME Rated Capacity (540,000 lbs/hr) for Saturated Steam according to NB-7734
  - ✓ Ex) ASME certification number: 64066
- Section 15.2 provides the Functional Design Evaluation of the Overpressurization Protection System.

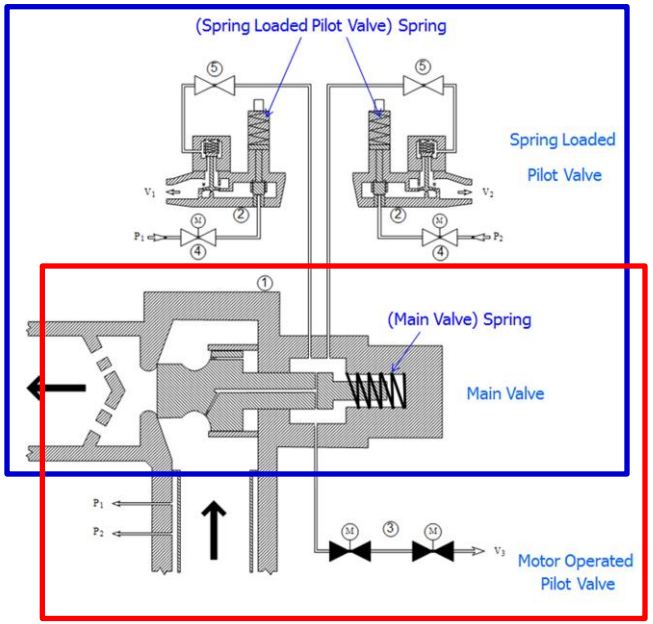


M: Motor Operated Valve
Vi: Pilot Discharge
Pi: Impulse Line

# Reactor Coolant System and Connecting Systems

- **5.2.2 Overpressure Protection (3/4)**

➢ **Open Item (RAI No. 8244, Question 05.02.02-1, b/c), Date issued (10/2/15); KHNP responded (12/11/15)**

- **Description of Issue** : Provide the description of the LTOP analysis and, more specifically provide the mass and energy addition transient results including the maximum ΔT.
- **Resolution :** Provided the description about the mass and energy addition event, transient results, and the assumption for the maximum ΔT.

➢ **Open Item (RAI No. 8609, Question 05.02.02-7), Date issued (5/18/16); KHNP responded (6/8/16)**

- **Description of Issue** : Provide the description about LTOP analysis methodology, input parameters, and assumption.
- **Resolution :** Provided the description about detailed methodology, input parameters, and assumption. And provided why these inputs and assumption are suitably conservative.

# Reactor Coolant System and Connecting Systems

- **5.2.2 Overpressure Protection (4/4)**

  - **Open Item (RAI No. 8244, Question 05.02.02-5), Date issued (10/2/15); KHNP responded (6/30/16)**
    - **Description of Issue** : Address the difference between the pre-service testing in DCD Section 5.2.2.10 and Chapter 14 test for pressurizer POSRVs.
    - **Resolution :** Revised test plans in Section 14.2 to describe the complete pre-service testing for pressurizer POSRVs.

# Reactor Coolant System and Connecting Systems

## 5.2.3 Reactor Coolant Pressure Boundary Materials (1/5)

### Material Specification and Selection

- Conform to ASME Section III NB for Class 1 components and RG 1.84

### Low-alloy Steel and Carbon-steel

- RCS components fabricated from low-alloy and carbon steel forgings with cladding
- Conform to RG 1.43 for clad integrity
- Conform to 10 CFR 50 Appendix G for fracture toughness properties
- $RT_{NDT}$ control ≤ 10˚F for RCPB, ≤ -10˚F for RPV belt line materials
- Sulfur content limited to 0.010% max.
- Tight control on chemical elements for RPV belt line to reduce the neutron embrittlement
  - ✓ Cu: 0.05% / 0.03% (welds / forgings), Ni: 0.10% / 1.00% (welds / forgings), P: 0.012%, V: 0.030%, S: 0.010%
- Major structural materials: SA-508 Grade 3 Class 1, SA-508 Grade 1A

# Reactor Coolant System and Connecting Systems

## 5.2.3 Reactor Coolant Pressure Boundary Materials (2/5)

### Austenitic Stainless Steel

- Control of use of sensitized stainless steel (comply with RG 1.44)
- Solution annealed condition
- Reduced carbon content of base metals and welding materials (less than 0.065% or L-grade)
- No cold worked austenitic stainless steel for reactor coolant contact parts
- Limited cobalt content (0.05%)

### Ni-Cr-Fe Alloys (Alloy 690)

- Control on chemistry and mechanical properties with state-of-the-art industrial requirements
- Thermally treated (TT) after solution annealing
- Control on fabrication practices to limit residual cold work
- Limited cobalt content (0.014 % ave. / 0.020% max. for SG tube, 0.020% for other materials)
- SG tube, all ICI and CEDM nozzles and small nozzles
- Welding material of Alloy 52/52M/152 (Neither Alloy 600 nor 82/182 filler material is used.)

# Reactor Coolant System and Connecting Systems

## 5.2.3 Reactor Coolant Pressure Boundary Materials (3/5)

### Castings

- Delta ferrite content is limited to prevent thermal aging (CF8M ≤ 14% max.)
- Valve body material

### Compatibility with Reactor Coolant

- RCS water chemistry is controlled with up-to-date EPRI primary water chemistry guidelines (Rev. 7)
- Comply with RG 1.36 for non-metallic insulation

### Fabrication and Processing of Ferritic Materials

- Comply with ASME Section III NB for fabrication and Non Destruction Examination
- Welding procedure & personnel qualified with ASME Sec. III, IX and followings (if applicable)
  - ✓ Comply with RG 1.50 and Appendix D for pre-heat requirement
  - ✓ Hydrogen removing by post heating
  - ✓ Cladding with RG 1.43
  - ✓ Welder qualification of RG 1.71

# Reactor Coolant System and Connecting Systems

## 5.2.3 Reactor Coolant Pressure Boundary Materials (4/5)

### Fabrication and Processing of Austenitic Stainless Steel

- Avoidance of **s**tress **c**orrosion **c**racking
  - ✓ Solution heat treatment & rapid cooling and control on exposure to specific sensitizing temperature range (800˚F-1500 ˚F)
  - ✓ Cold worked austenitic stainless steel is not used for RCPB
  - ✓ ASTM A262 Practice A or E corrosion test
- Avoidance of sensitization by welding
  - ✓ Welding procedure qualification with RG 1.44
  - ✓ Delta ferrite control on welding material
  - ✓ Weld heat input control
  - ✓ Interpass temperature control
  - ✓ Reduced carbon content
  - ✓ ASTM A262 Practice A or E corrosion test for ensuring non-sensitization
  - ✓ Nb-stabilized austenitic stainless steel (surge line pipe), L-grade (safe end)
- Control on cleaning and contamination during all phase of fabrication
  - ✓ Maintain cleanliness in accordance with NQA-1
  - ✓ Control on chemical elements of component cleaning water

# Reactor Coolant System and Connecting Systems

## 5.2.3 Reactor Coolant Pressure Boundary Materials (5/5)

### Open Item (DCD Section 5.2.3.4.1 d. Avoidance of Sensitization)

- **Description of Issue** : Can not determine whether the use of weld heat input, maximum interpass temperature, and maximum carbon content specified by the applicant will ensure non-sensitization of the materials.

- **Resolution :** The welding procedure specification (WPS) is qualified with ASME Sec. III and IX using the maximum heat input, interpass temperature and reduced carbon content specified in the DCD. In the qualification process, ASTM A262 Practice A or E test is also performed for ensuring non-sensitization of weld metal and weld heat-affected-zone.

  Since the product welding is to be performed under weld heat input, interpass temperature and carbon content less than the maximum values allowed by the qualified WPS, the weld metal and weld heat-affected-zone will not be sensitized severely.

# Reactor Coolant System and Connecting Systems

## 5.2.4 Inservice Inspection and Testing

- **Comply with ASME Section XI with 10 CFR 50.55a for PSI and ISI**
  - 10-year inspection interval plan
  - COL applicant is to prepare the PSI and ISI program
  - ASME code cases in accordance with RG 1.147
- **Inspectability of Components**
  - Components designed to allow personnel and equipment to access for required examination in accordance with Sec. XI IWA-1500
- **Qualification of Examination Personnel and Procedure**
  - Personnel qualification with ASME Sec. XI Appendix VII
  - Performance demonstration with ASME Sec. XI Appendix VIII
- **RPV Closure Head Examination with Code Case N-729-1 and 10 CFR 50.55a**
- **Other Inspection Program: Boric Acid Corrosion (BAC) Program**

# Reactor Coolant System and Connecting Systems

- **5.2.5 Reactor Coolant Pressure Boundary Leakage Detection**

- **System Designed in accordance with RG 1.29 and conforms to RG 1.45**
- **Unidentified Leakage**
  - Sensitivity: 0.5 gpm can be detected less than 1 hour
  - Methods: Inventory, sump level and flow, containment air particulate radioactivity monitoring, an acoustic leak monitoring system (ALMS)
- Identified Leakage
  - Definition: (1) Captured/flow-metered/conducted to collection (2) leakage into the containment atmosphere from a known source
  - Leakage instrumentation in the main control room
  - POSRVs, RCP seals, valves, reactor vessel head flange leakage, leakage through steam generator tubes or tubesheet (Chapter 11), leakage to auxiliary systems (Chapter 11)

# Reactor Coolant System and Connecting Systems

## 5.3.1 Reactor Vessel Materials

- **Comply with ASME Sec. II, III, V, IX and 10 CFR 50 & Appendices, NRC Reg. Guides**
  - SA-508 Gr. 3 Cl. 1 with stainless steel clad for RPV shells, main nozzles, heads
    - ✓ Initial $RT_{NDT}$ ≤ -10°F for core belt line, ≤ 10°F for other RCPB part
    - ✓ Meet the fracture toughness requirements of ASME Sec. III App. G and 10 CFR 50 App. G
  - Alloy 690 for CEDM nozzles and ICI nozzles
  - Surveillance program for RPV in accordance with 10 CFR 50 App. H

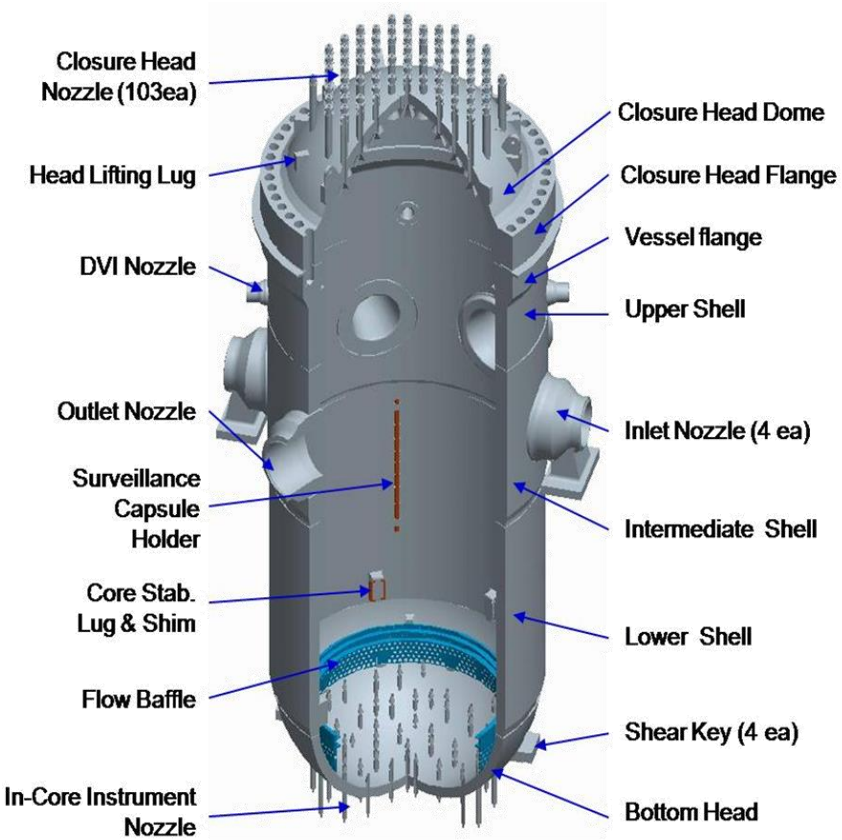

# Reactor Coolant System and Connecting Systems

- **5.3.2.1 Pressure-Temperature Limits (1/2)**

- **Prevent RCPB materials from non-ductile fracture during heat-up and cool-down transients**
- **Established in accordance with Appendix G of 10 CFR 50 and Appendix G of ASME Code Section XI**
- **Based on end of life (60 years or 55.8 EFPYs based on 93% capacity factor) fast neutron fluence.**
- **Critical Limiting Cases:**
  - RV Beltline: High neutron irradiation induced embrittlement region
  - RV Flange: Bolt preload-induced bending & internal pressure stressed region
  - Inlet, Outlet & Direct Vessel Injection Nozzles: High stressed region

# Reactor Coolant System and Connecting Systems

- **5.3.2.1 Pressure-Temperature Limits (2/2)**

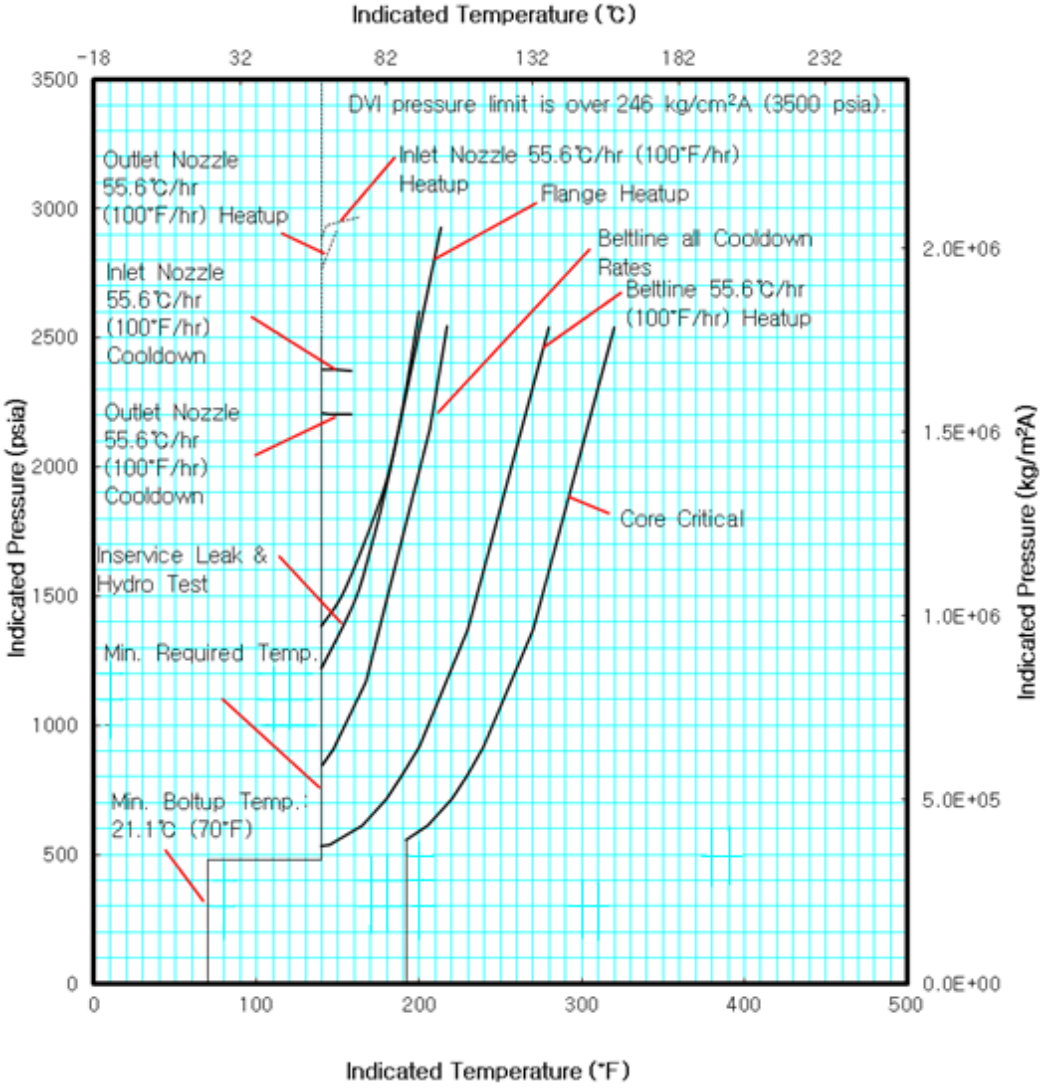

# Reactor Coolant System and Connecting Systems

## 5.3.2.3 Pressurized Thermal Shock

- **$RT_{PTS}$ values at the end of life must be approved by NRC.**
- **Satisfy the 10 CFR 50.61 Screening Criteria.**

| Material | Initial $RT_{NDT}$ (℃(℉)) | Fluence Factor[1)] | Chemistry Factor[2)] (℃(℉)) | $\Delta RT_{PTS}$ (℃(℉)) | Margin[3)] (℃(℉)) | $RT_{PTS}$ (℃(℉)) | Screening Criterion (℃(℉)) |
|---|---|---|---|---|---|---|---|
| Lower Shell Course (beltline material) | -23.3 (-10) | 1.51 | 11.1 (20) | 16.8 (30.2) | 16.8 (30.2) | 10.2 (50.4) | 132.2 (270) |
| Weld Material (G-2 & G-3) | -12.2 (10) | 1.51 | 20.8 (37.5) | 31.4 (56.6) | 31.1 (56) | 50.3 (122.6) | 148.9 (300) |

Notes:

1) Fluence Factor = $f^{(0.28-0.10\log f)}$, fast neutron fluence: $f_{surf} = 9.5 \times 10^{19}$ n/cm$^2$.

2) Chemistry Factor for Lower shell forging material of 0.03 wt% Cu & 1.00 wt% Ni, for Weld materials of 0.05 wt% Cu & 0.10 wt% Ni, respectively.

3) Margin = $2(\sigma_u^2+\sigma_\Delta^2)^{0.5}$,

where, $\sigma_u$ = 0 and $\sigma_\Delta$ = lesser of 17°F or 0.5 x $\Delta RT_{PTS}$ for the beltline material.

$\sigma_u$ = 0 and $\sigma_\Delta$ = lesser of 28°F or 0.5 x $\Delta RT_{PTS}$ for the weld material.

# Reactor Coolant System and Connecting Systems

- **5.3.2.4 Upper-Shelf Energy (USE)**

➢ **Established in accordance with Appendix G of 10 CFR 50 and Branch Tech. Position (BTP) 5-3 of NRC Standard Review Plan**

- **USE**_Initial, min.: Higher than 102 Joules (75 ft-lbs)
- **USE**_End of Life, min.: Higher than 68 Joules (50 ft-lbs)

➢ **With the initial limiting value of 102 Joules (75 ft-lbs), the end-of-life (EOL) USE for APR1400 is estimated to be 69.4 Joules (51 ft-lbs), which is greater than the limiting EOL value.**

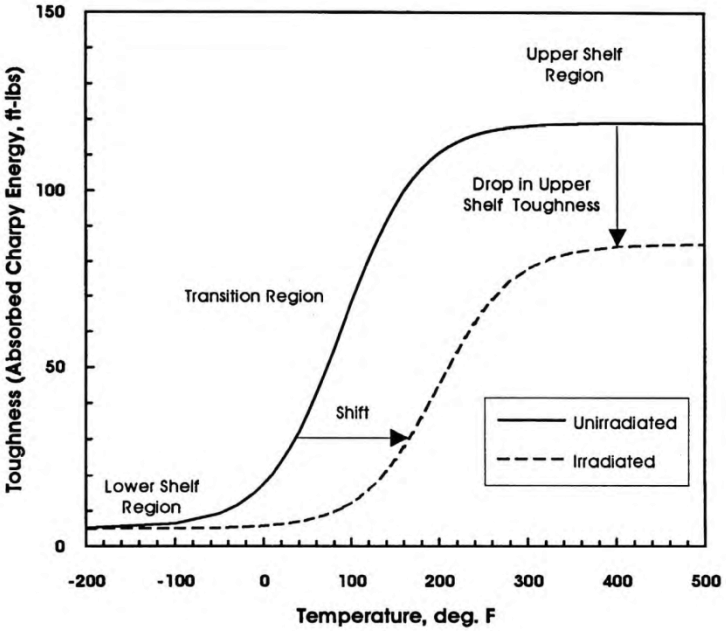

# Reactor Coolant System and Connecting Systems

## 5.3.3 Reactor Vessel Integrity

- **Proven Fabrication Techniques and Well-characterized Steels are used for RPV Integrity.**
- **Structural Integrity of RPV is provided by meeting the ASME Section III rules for Class 1 Components**
- **Materials, Fabrication Processes, Inspection, Shipment and Installation of RPV are in accordance with ASME Codes and Standards, 10 CFR 50 requirements and applicable Reg. Guides.**
- **Surveillance of RPV Integrity**
  - Inservice inspection program for RPV with ASME Sec. XI and 10 CFR 50.55a
  - Material surveillance program for RPV belt line region with 10 CFR 50 App. H

# Reactor Coolant System and Connecting Systems

## • 5.4.1 Reactor Coolant Pump (1/7)

| Parameter | Value |
|---|---|
| Number of units | 4 |
| Type | Vertical, single-stage centrifugal |
| Rated total dynamic head, m (ft) | 109.7 (360) |
| Rated flow, L/min (gpm) | 460,256 (121,600) |
| Design pressure, kg/cm$^2$A (psia) | 175.8 (2,500) |
| Design temperature, °C (°F) | 343.3 (650) |
| Normal operating pressure, kg/cm$^2$A (psia) | 158.2 (2,250) |
| Normal operating temperature, °C (°F) | 290.6 (555) |
| NPSH available (at rated flow), m (ft) | 152.4 (500) |
| Suction temperature, °C (°F) | 290.6 (555) |
| Water volume, each, m$^3$ (ft$^3$) | 3.26 (115) |
| Weight (including motor), dry, kg (lb) | 144,515 (318,600) |
| Rotating inertia, pump, and motor: Assembly, minimum, kg-m$^2$ (lbs-ft$^2$) | 6,717 (159,400) |
| Shaft seals | Mechanical face seals |
| Pump speed, rpm | 1190 |
| Motor synchronous speed, rpm | 1200 |
| Motor type | AC induction |
| Horsepower, hot, kW (hp) | 7,457 (10,000) |
| cold, kW (hp) | 10,067 (13,500) |
| Rated brake horsepower, kW (hp) | 7,457 (10,000) |
| Voltage, V | 13200 |
| Phase | 3 |
| Frequency, Hz | 60 |
| Insulation class | F |
| Starting current, at 100 % voltage, amps | 3426 |

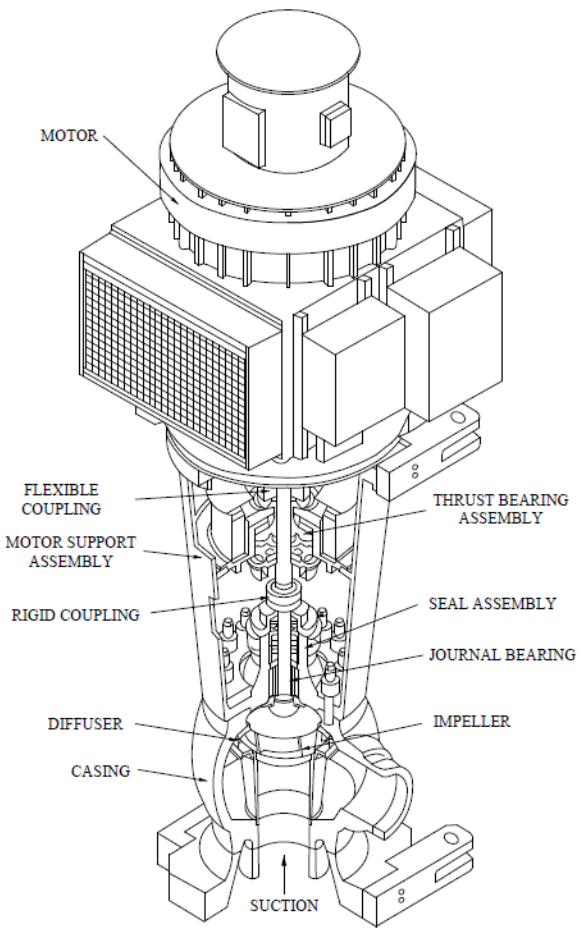


Figure 5.4.1-1 Reactor Coolant Pump

# Reactor Coolant System and Connecting Systems

## 5.4.1 Reactor Coolant Pump (2/7)

### High Pressure Cooler

- The RCP seals are normally cooled by redundant systems (1) seal injection and (2) heat removal via the high pressure cooler with CCW system

### Type F seal

- Materials: Long-term exposure to high temperature and pressure environment
- Test results demonstrated the ability of the seal to survive an extended SBO event.
  - ✓ Simulation of a SBO event lasting up to 72 hours.
  - ✓ Seal performance under low sub-cooling conditions

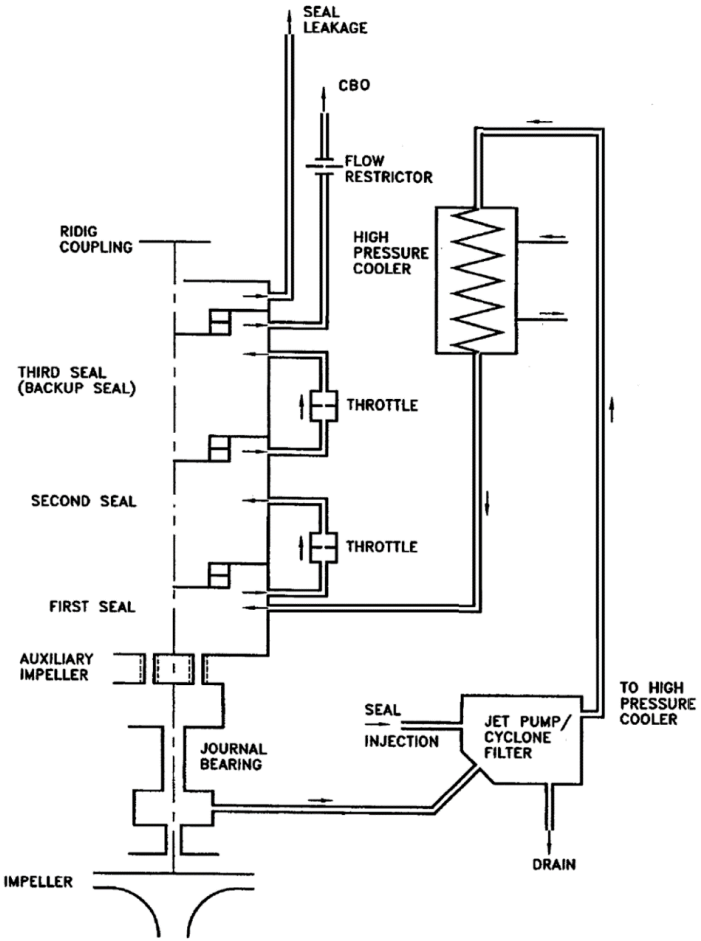

# Reactor Coolant System and Connecting Systems

- **5.4.1 Reactor Coolant Pump (3/7)**

  - **Open Item (RAI No. 8555, Question 05.04-2, Part 1), Date issued (3/15/16); KHNP responded (4/29/16)**
    - **Description of Issue** : Clarify regarding RCP seal water injection during 30-minute period (RAI 307-7835, Question 05.04-1, Part 5).
    - **Resolution :** RCP seal injection is supplied to the RCPs by two charging pumps or the auxiliary charging pump. Auxiliary charging pump can be powered from the onsite alternate AC power source.

  - **Open Item (RAI No. 8555, Question 05.04-2, Part 2) , Date issued (3/15/16); KHNP responded (4/29/16)**
    - **Description of Issue** : Commitment regarding the seal test results. (RAI 307-7835, Question 05.04-1, Part 7).
    - **Resolution :** Seal test results are available to staff audit. A general summary of tests is incorporated into the DCD.

# Reactor Coolant System and Connecting Systems

## 5.4.1 Reactor Coolant Pump (4/7)

### Flywheel

- A cylindrical shrink fit of the outer wheel to the hub, and then a conical shrink fit between the hub and the shaft
- Material: 26NiCrMoV14-5, high strength ductile forged material
- Fracture toughness: $K_{IC}$ > 165 MPa√m (150 ksi√in).
- Design: APR1400-A-M-NR-14001-NP, KHNP APR1400 Flywheel Integrity Report

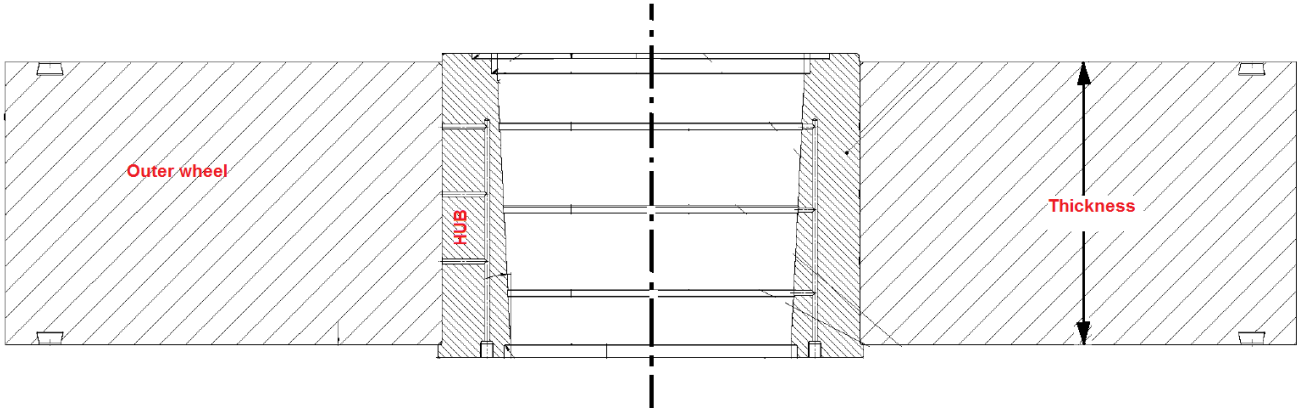

# Reactor Coolant System and Connecting Systems

- **5.4.1 Reactor Coolant Pump (5/7)**

➢ **Open Item (RAI No. 8641, Question 05.04.01.01-7), Date issued (7/6/16); KHNP responded (9/12/16)**

- **Description of Issue** : Describe acceptable approach for determining fracture toughness of the flywheel materials.
- **Resolution :** Revised DCD to state fracture toughness of at least 150 ksi√in (to specify the direct method of determining fracture toughness)

➢ **Open Item (RAI No. 8641, Question 05.04.01.01-8), Date issued (7/6/16); KHNP responded (9/12/16)**

- **Description of Issue** : Clarify operating experience table.
- **Resolution :** Revised operating experience table with the same material used in Korean and German plants.

# Reactor Coolant System and Connecting Systems

## 5.4.1 Reactor Coolant Pump (6/7)

- **Open Item (RAI No. 8641, Question 05.04.01.01-9), Date issued (7/6/16) ; KHNP responded (9/12/16)**
  - **Description of Issue** : Apply a RCP flywheel stress limit of one-third of the yield strength of the material or provide technical justification for use of one-third of ultimate strength.
  - **Resolution :** Apply a RCP flywheel stress limit of one-third of the yield strength of the material according to the SRP 5.4.1.1.

- **Open Item (RAI No. 8641, Question 05.04.01.01-10), Date issued (7/6/16) ; KHNP responded (9/12/16)**
  - **Description of Issue** : Revise the technical report to include an analysis of the hub and provide the appropriate fatigue crack growth rates.
  - **Resolution :** Add a separate stress plot of the hub.

# Reactor Coolant System and Connecting Systems

- **5.4.1 Reactor Coolant Pump (7/7)**

  - **Open Item (RAI No. 8641, Question 05.04.01.01-11), Date issued (7/6/16); KHNP responded (9/12/16)**
    - **Description of Issue** : Specify maximum flaw size used as the acceptance criteria and that it is bounding in determining the critical flaw size.
    - **Resolution :** Revised DCD to include inspection acceptance criteria.

  - **Open Item (RAI No. 8641, Question 05.04.01.01-12 ), Date issued (7/6/16); KHNP responded (9/12/16)**
    - **Description of Issue** : Tests and inspections proposed for the flywheel also apply to the hub.
    - **Resolution :** The hub has oil channels that would make it difficult to perform UT inspection. Flaw propagation will be shown as negligible. Additional defense-in-depth notation will be added to the DCD for ISI instructions.

# Reactor Coolant System and Connecting Systems

- **5.4.2 Steam Generator (1/3)**
  - **Heat Transfer with 2 SGs**
    **:** 4,000 MWth / 1,400 MWe
  - **Alloy 690TT, Vertical U-Tube with 13,102 tubes/SG**
  - **Integral Economizer**
  - **Steam Outlet Nozzle with Flow Restrictor**

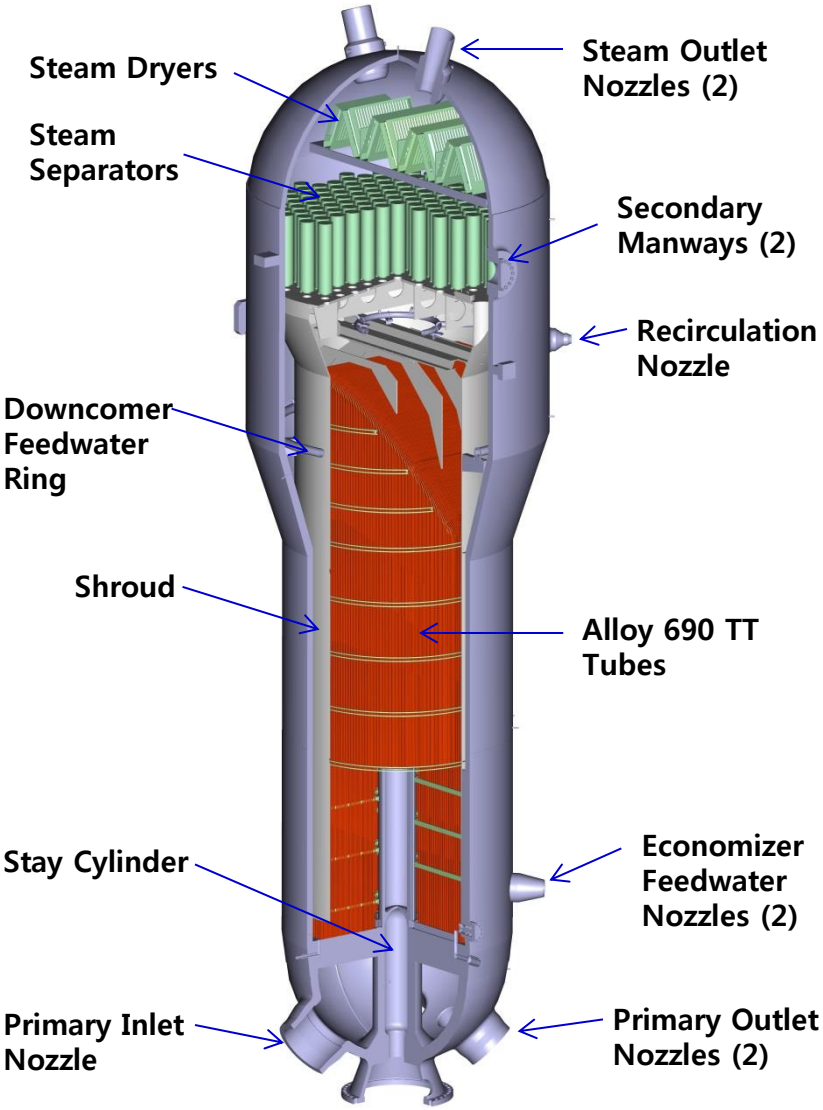

# Reactor Coolant System and Connecting Systems

- **5.4.2 Steam Generator (2/3)**

# Reactor Coolant System and Connecting Systems

## 5.4.2 Steam Generator (3/3)

- **Open Item (RAI No. 8620, Question 05.04.02.02-6), Date issued (6/8/16); KHNP responded (7/26/16)**
  - **Description of Issue** : Administrative issue of the eRAI number and inconsistency of the proposed leakage values between the TS bases and Chapter 15.
  - **Resolution**
    - Changed the eRAI number from 05.04.02.02-5 to 05.04.02.02-6
    - Revised the TS bases from 0.3 gpm to 0.6 gpm for all SGs primary to secondary leakage.

# Reactor Coolant System and Connecting Systems

## ● 5.4.7 Shutdown Cooling System (1/2)

- ➢ **SCS is used to reduce the temperature of RCS from hot shutdown condition (176.7 °C (350 °F)) to refueling condition.**
- ➢ **The SCPs and CSPs are identical and functionally interchangeable.**

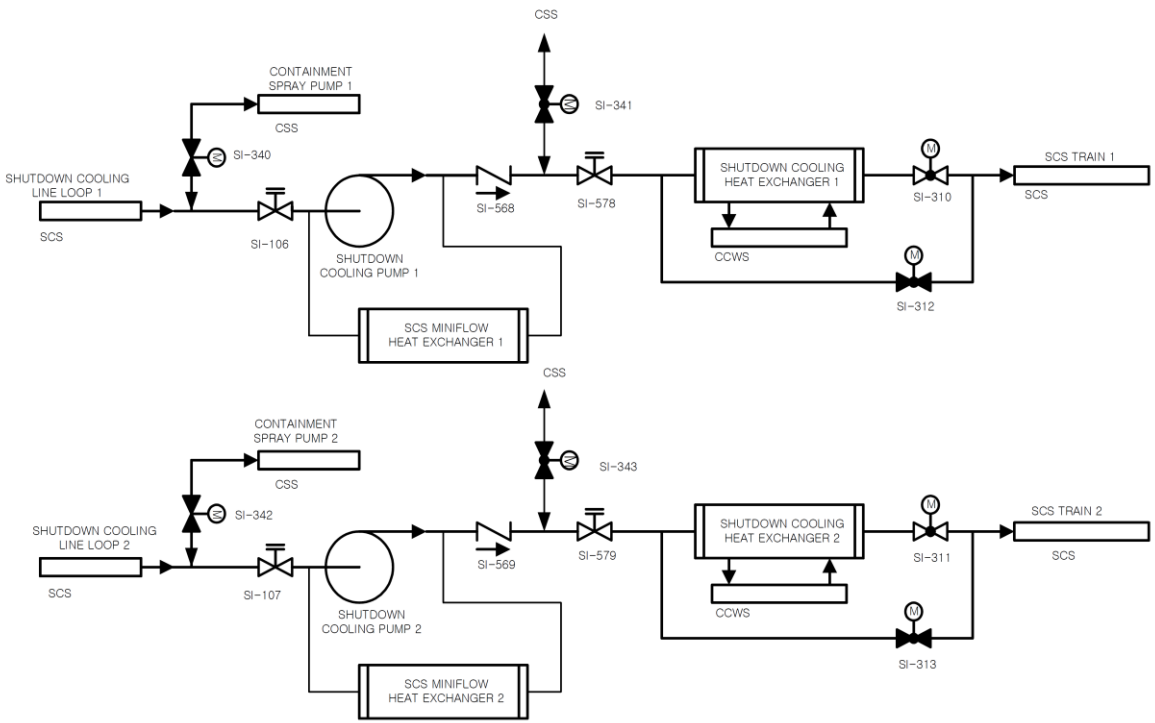

# Reactor Coolant System and Connecting Systems

- **5.4.7 Shutdown Cooling System (2/2)**

  - **Open Item (RAI No. 8614, Question 05.04.07-4), Date issued (5/26/16); KHNP responded (7/8/16)**

    - **Description of Issue** : Revise the ITAAC for gas accumulation addressing GL-2008-1 and NEI-09-10, Revision 1a-A as they relate to SCS, SIS, and CSS.

    - **Resolution :** Revised the ITAAC to include the as-built evaluation for gas entrainment.

# Reactor Coolant System and Connecting Systems

- **5.4.10 Pressurizer (1/3)**
  - **RCS Pressure and Volume Control**
    - Internal volume: 2,400 $ft^3$
    - Connected with surge line
  - **4 Pilot Operated Safety Relief Valves (POSRVs)**
    - Overpressurization protection of RCS
    - Integrated installed with reactor coolant gas vent system (RCGVSs)

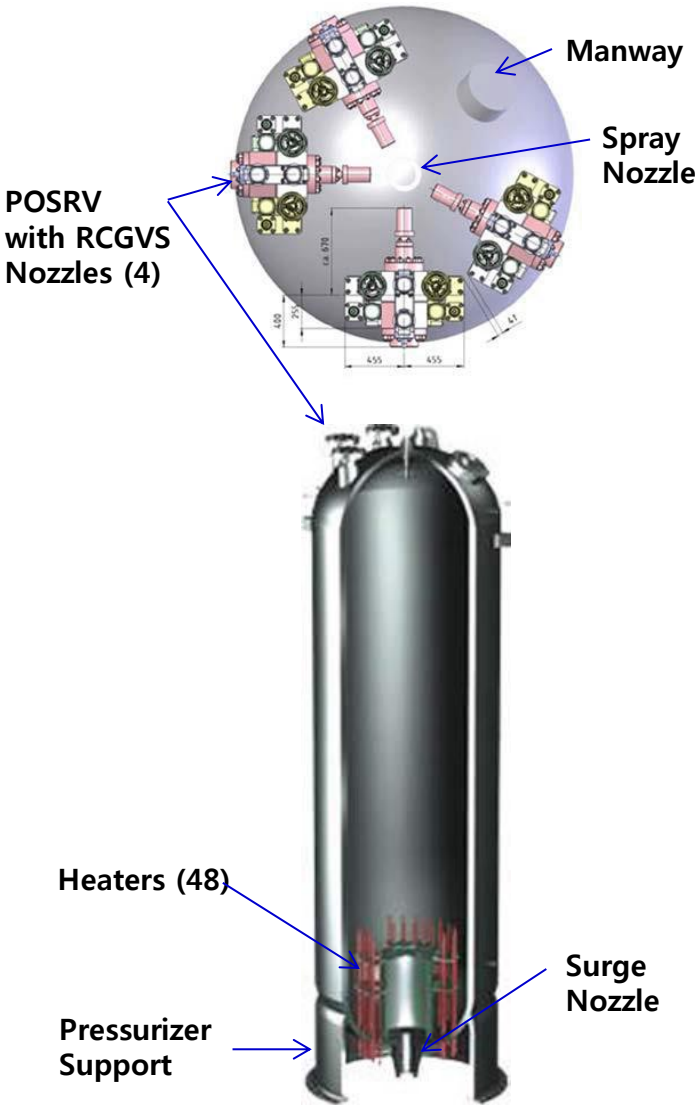


ACRS Meeting (Sep.21-22. 2016)

# Reactor Coolant System and Connecting Systems

## • 5.4.10 Pressurizer (2/3)

| Parameter | Value |
|---|---|
| Design pressure, kg/cm$^2$A (psia) | 175.8 (2,500) |
| Design temperature, °C (°F) | 371.1 (700) |
| Normal operating pressure, kg/cm$^2$A (psia) | 158.2 (2,250) |
| Normal operating temperature, °C (°F) | 344.8 (652.7) |
| Internal free volume, m$^3$·(ft$^3$) | 68.0 (2,400) |
| Normal (full power) operating water volume, m$^3$ (ft$^3$) | 33.2 (1,171) |
| Normal (full power) steam volume, m$^3$ (ft$^3$) | 35.7 (1,260) |
| Installed heater capacity, kW | 2,400 |
| Heater type | Immersion |
| Spray flow, minimum design capacity, L/min (gpm) | 1,703.4 (450) |
| Bypass spray flow, continuous, L/min (gpm) | 1.9~22.7 (0.5~6) |
| Nozzles: | |
| Surge, in (nominal)<br>Spray, in (nominal)<br>POSRV, in | 12, schedule 160<br>4, schedule 160<br>6, Liner ID<br>7.75, nozzle ID |
| Instrument: | |
| Level, in (nominal)<br>Temperature, in (nominal)<br>Pressure, in (nominal) | 3/4, schedule 160<br>1, schedule 160<br>3/4, schedule 160 |
| Heater, OD, mm (in) | 31.75 (1-1/4) |

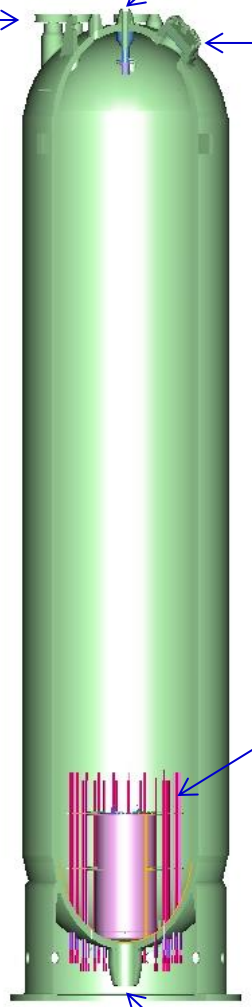


ACRS Meeting (Sep.21-22. 2016)

# Reactor Coolant System and Connecting Systems

- **5.4.10 Pressurizer (3/3)**

# Reactor Coolant System and Connecting Systems

## 5.4.12 Reactor Coolant System High Point Vents

### Reactor Coolant Gas Vent System (RCGVS)

- Discharge non-condensable gases and steam from the high point of the RCS for venting or pressure control during post-accident conditions
- The in-containment refueling water storage tank (IRWST) collects and condenses the steam discharged from the reactor coolant gas vent system (RCGVS).

# Reactor Coolant System and Connecting Systems

## 5.4.15 Component Supports

- **Reactor Vessel**
  - 4 Vertical columns
- **Steam Generator (SG)**
  - 1 Sliding base
  - 2 Snubbers & keys
- **Pressurizer**
  - Integral support
- **Reactor Coolant Pump**
  - 4 Vertical columns
  - 2 Upper & lower horizontal columns
  - 2 Horizontal snubbers

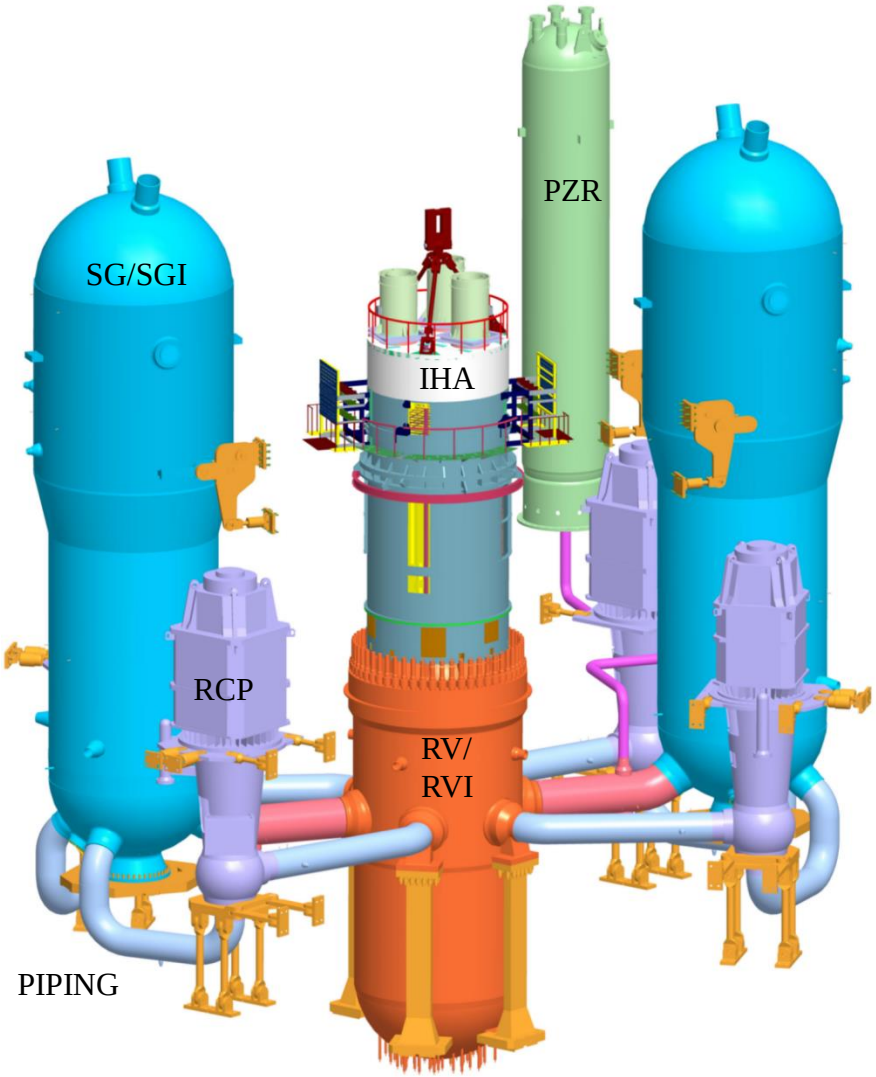

# Summary

- In chapter 5, the design features of the RCS of the APR1400 standard plant are described.
- All RCS components are located inside the containment building. Table 5.1.1-1 shows the principal parameters of the RCS.
- The reactor coolant pressure boundary (RCPB) components are consistent with 10 CFR 50.2 and 10 CFR 50.55a. Applicable codes and standards of RCS components are listed in Table 3.2-1

# Current Status

- Chapter 5 is on a success path for completion on schedule.
- An SER with Open Items was issued
  - A path for closing each open item has been discussed with the NRC Staff and is being implemented.
  - KHNP believes that the open items except for flywheel which is in progress have been addressed.
- Chapter 5 as reviewed and marked-up in response to NRC's "Request for Additional Information" will be incorporated into the next revision of the Design Control Document.
- Monitoring of changes to other chapters for impacts on this chapter is conducted to maintain consistency.

# Attachment : Acronyms

- ASME: American Society of Mechanical Engineers
- CEDM: Control Element Drive Mechanism
- CCW: Component Cooling Water
- CSP: Containment Spray Pump
- CSS: Containment Spray System
- EFPY: Effective Full Power Year
- ICI: In-Core Instrumentation
- IRWST: In-containment Refueling Water Storage Tank
- ISI: Inservice Inspection
- IST: Inservice Testing
- KHNP: Korea Hydro & Nuclear Power
- LTOP: Low Temperature Overpressure Protection
- POSRV: Pilot-operated Safety Relief Valve
- RCGVS: Reactor Coolant Gas Vent System
- RCP: Reactor Coolant Pump
- RCPB: Reactor Coolant Pressure Boundary
- RCS: Reactor Coolant System
- RG: Regulatory Guide
- $RT_{NDT:}$ Reference Temperature for Nil Ductility Transition
- SCS: Shutdown Cooling System

# Attachment : List of COL Items for Ch. 5 (1/3)

| COL No. | Description |
|---|---|
| COL 5.2(1) | The COL applicant is to address the addition of ASME Code Cases that are approved in NRC RG 1.84 at the time of the application. |
| COL 5.2(2) | The COL applicant is to address the ASME Code Cases approved in NRC RG 1.147 at the time of the application and invoked for the ISI program of a specific plant. |
| COL 5.2(3) | The COL applicant is to address the ASME Code Cases approved in NRC RG 1.192 at the time of the application and invoked for operation and maintenance activities of a specific plant. |
| COL 5.2(4) | The COL applicant is to address the material specifications, which are not shown in Table 5.2-2, as necessary. |
| COL 5.2(5) | The COL applicant is to specify the version of EPRI's, "Primary Water Chemistry Guidelines," that will be implemented. |
| COL 5.2(6) | The COL applicant is to address the actual, as-procured, fracture toughness data of the RCPB materials to the staff at a predetermined time by an appropriate method. |
| COL 5.2(7) | The COL applicant is to submit the actual, as-procured yield strength of the austenitic stainless steel materials used in RCPB to the staff at a predetermined time agreed-upon by the regulatory body. |
| COL 5.2(8) | The COL applicant is to provide and develop the implementation milestones for the inservice inspection and testing program for the RCPB, in accordance with ASME Section XI and 10 CFR 50.55a. |
| COL 5.2(9) | The COL applicant is to address the provisions to accessibility of Class 1 components for ISI if the design of the APR1400 Class 1 component is changed from the DCD design. |

# Attachment : List of COL Items for Ch. 5 (2/3)

| COL No. | Description |
|---|---|
| COL 5.2(10) | The COL applicant is to provide the list of Code exemptions in the ISI program of the specific plants, if it exists. |
| COL 5.2(11) | (Deleted) |
| COL 5.2(12) | (Deleted) |
| COL 5.2(13) | The COL applicant is to prepare and implement a boric acid corrosion (BAC) prevention program in conformance with Generic Letter 88-05. |
| COL 5.2(14) | The COL applicant is to prepare the preservice inspection and testing program. |
| COL 5.2(15) | The COL applicant is to address and develop the milestones for the preparation and implementation of the procedure for operator responses to prolonged low-level leakage. |
| COL 5.2(16) | The COL applicant is to address the portions of the later editions and addenda of ASME Code. |
| COL 5.3(1) | The COL applicant is to provide a reactor vessel material surveillance program for a specific plant. |
| COL 5.3(2) | The COL applicant is to develop P-T Limit curves based on plant-specific data. |
| COL 5.3(3) | The COL applicant is to verify the RTPTS value and the USE at EOL based on plant-specific material property and neutron fluences. |

# Attachment : List of COL Items for Ch. 5 (3/3)

| COL No. | Description |
|---|---|
| COL 5.3(4) | The COL applicant is to provide and develop the inservice inspection and testing program for the RCPB, in accordance with ASME Section XI and 10 CFR 50.55a. |
| COL 5.4(1) | The COL applicant is to prepare operational procedures and maintenance programs related to leak detection and contamination control of RCS. |
| COL 5.4(2) | The COL applicant is to maintain complete documentation of system design, construction, design modifications, field changes, and operations of RCS. |
| COL 5.4(3) | The COL applicant is to prepare operational procedures and maintenance programs related to leak detection and contamination control of SCS. |
| COL 5.4(4) | The COL applicant is to maintain complete documentation of system design, construction, design modifications, field changes, and operations of SCS. |
| COL 5.4(5) | The COL applicant is to verify the as-built RV support material properties and 60-year neutron fluence. |
| COL 5.4(6) | The COL applicant is to prepare a PSI and ISI programs of the SG tubes. |
| COL 5.4(6) | The COL applicant is to provide a procedure to protect the plant personnel from harsh environment and lengthen the work time within containment during hatch closure. |
| COL 5.4(7) | The COL applicant is to prepare an inspection and monitoring program for the cladding material integrity of SG channel heads. |

U.S.NRC

United States Nuclear Regulatory Commission

*Protecting People and the Environment*

# Presentation to the ACRS Subcommittee

## Korea Hydro Nuclear Power Co., Ltd (KHNP)
## APR1400 Design Certification Application Review

### Safety Evaluation with Open Items: Chapter 5

### REACTOR COOLANT SYSTEM AND CONNECTING SYSTEMS

SEPTEMBER 22, 2016

- **Technical Staff Presenters**
  - John Budzynski – DCD Sections 5.2.2, 5.4.1.2, 5.4.7, & 5.4.1.12
  - Dan Widrevitz – DCD Section 5.2.3
  - Jessica Umaña – DCD Section 5.2.5
  - John Honcharik – DCD Section 5.4.1.1
  - Greg Makar – DCD Sections 5.4.2.2

- **Project Managers**
  - Jeff Ciocco – Lead Project Manager
  - Jessica Umaña – Chapter 5 Project Manager

# Staff Review Team

U.S.NRC
United States Nuclear Regulatory Commission
*Protecting People and the Environment*

- **Jason Huang**
  Mechanical Engineering Branch
- **Tom Scarbrough**
  Mechanical Engineering Branch
- **Cheng-Ih Wu**
  Mechanical Engineering Branch
- **John Budzynski**
  Reactor Systems, Nuclear Performance & Code Review Branch
- **Alex Burja**
  Reactor Systems, Nuclear Performance & Code Review Branch
- **Chang-Yang Li**
  Plant Systems Branch
- **Hien Le**
  Plant Systems Branch

# Staff Review Team

- **Raul Hernandez**
  Plant Systems Branch
- **Gordon Curran**
  Plant Systems Branch
- **John Honcharik**
  Materials & Chemical Engineering Branch
- **Dan Widrevitz**
  Materials & Chemical Engineering Branch
- **Gregory Makar**
  Materials & Chemical Engineering Branch
- **Steven Downey**
  Materials & Chemical Engineering Branch
- **Eric Reichelt**
  Materials & Chemical Engineering Branch

# Overview of Design Certification Application, Chapter 5

U.S.NRC
United States Nuclear Regulatory Commission
*Protecting People and the Environment*

| SRP Section/Application Section | | No. of Questions | Number of OI |
|---|---|---|---|
| 5.2.1.1 | Compliance with the Codes and Standards Rule, 10 CFR 5055a | 3 | 0 |
| 5.2.1.2 | Compliance with Applicable Code Cases | 2 | 0 |
| 5.2.2 | Overpressure Protection | 7 | 3 |
| 5.2.3 | Reactor Coolant Pressure Boundary Materials | 22 | 1 |
| 5.2.4 | Inservice Inspection and Testing of the Reactor Coolant Pressure | 2 | 0 |
| 5.2.5 | Reactor Coolant Pressure Boundary Leakage Detection | 3 | 0 |

# Overview of Design Certification Application, Chapter 5

U.S.NRC
United States Nuclear Regulatory Commission
*Protecting People and the Environment*

| SRP Section/Application Section | | No. of Questions | Number of OI |
|---|---|---|---|
| 5.3.1 | Reactor Vessel Materials | 0 | 0 |
| 5.3.2 | Pressure-Temperature Limits, Pressurized Thermal Shock, and Upper-Shelf Energy Data and Analyses | 1 | 0 |
| 5.3.3 | Reactor Vessel Integrity | 0 | 0 |
| 5.4 | Reactor Coolant System Component and Subsystem Design | 2 | 1 |
| 5.4.1.1 | Reactor Coolant Pump Flywheel Integrity | 12 | 6 |
| 5.4.1.2 | Reactor Coolant Pump | 0 | 0 |

# Overview of Design Certification Application, Chapter 5

| SRP Section/Application Section | | No. of Questions | Number of OI |
|---|---|---|---|
| 5.4.2.1 | Steam Generator Materials | 3 | 0 |
| 5.4.2.2 | Steam Generator Program | 6 | 1 |
| 5.4.3 | Reactor Coolant Piping | 0 | 0 |
| 5.4.7 | Residual Heat Removal System | 4 | 1 |
| 5.4.10 | Pressurizer | 0 | 0 |

# Overview of Design Certification Application, Chapter 5

| SRP Section/Application Section | | No. of Questions | Number of OI |
|---|---|---|---|
| 5.4.11 | Pressurizer Relief Tank | 0 | 0 |
| 5.4.12 | Reactor Coolant System High-Point Vents | 10 | 0 |
| Totals | | 77 | 13 |

# Technical Topics

## Section 5.2.2 – Overpressure Protection

United States Nuclear Regulatory Commission
*Protecting People and the Environment*

**Technical Topics**

- System Design
  - Overpressure protection for (1) RCS, (2) primary side of systems connected to RCS, and (3) secondary side of SGs

    - RCPB overpressure protection consist of 4 POSRV, 2 SCS RV, and 20 MSSV (5 per steamline)
  - SCS suction line relief valves provide sufficient pressure relief capacity to mitigate the most limiting low temperature overpressure protection (LTOP)

# Technical Topics
## Section 5.2.2 – Overpressure Protection

U.S.NRC
United States Nuclear Regulatory Commission
*Protecting People and the Environment*

**Open Items**

- **RAI 8244, Question 05.02.02-1** – Provide information regarding the analysis performed to demonstrate that POSRV and SCS RV provide sufficient capacity to maintain the pressure below the limit during full power and LTOP conditions.
  - **Status:** The response was received on 12/11/2015. The POSRV analysis was adequately addressed; however, the LTOP analysis did not address staff concerns related to methodology, codes, input parameters, and assumptions used in the LTOP analysis. This question is closed unresolved.
- **RAI 8609, Question 05.02.02-7 Follow up question** - Provide a description of the analysis methodology, computer codes, input parameters, and assumptions used in the analysis of the limiting LTOP event(s). Provide justification that the inputs are suitably conservative.
  - **Status**: The response was received on 6/9/2016. The follow up RAI response is currently in evaluation.
- **RAI 8244, Question 05.02.02-5 -** Address the difference between the pre-service testing requirements and Chapter 14 test.
  - **Status**: The response was received on 6/9/2016. The response was found acceptable because the complete pre-service testing is included in the Section 14.2 rewrite. The staff confirmed the revision. This question is closed resolved.

# Technical Topics
## Section 5.4.1.2 – Reactor Coolant Pumps

United States Nuclear Regulatory Commission
*Protecting People and the Environment*

**Technical Topics**

- Pump Design
  - RCP is a vertical shaft, single-stage, centrifugal pump
  - Loss of Component Cooling Water Event

    - CCW flows to pump/motor bearing oil coolers, motor air coolers, and high-pressure seal water cooler stopped

    - CVCS continues to provide seal water injection flow to the RCP seals

    - Pump/motor bearings designed to withstand loss of CCW for 30 minutes

    - CCWS Division 1 supports charging pump mini flow heat-exchanger in CVCS and all coolers on the RCPs
  - RCP seal design is improved to have low seal leakage rates during a station black-out (SBO) event

# Technical Topics
## Section 5.4.1.2 – Reactor Coolant Pumps

United States Nuclear Regulatory Commission
*Protecting People and the Environment*

**Open Items**

- **RAI 8555, Question 05.04-2, Part 1** – With respect to Loss of Component Cooling Water, provide a response to clarify whether the loss of CCW Division 1 affects the charging pump operation during the 30-minute period following the event
  - **Status:** The response was received 4/29/2016. The response was found acceptable because of the loss of the CCW to the charging pump only has a long term effect on its operation. This question is closed resolved.
- **RAI 8555, Question 05.04-2, Part 2** – Revise DCD Section 5.4 to include a summary of the seal leakage test results that show the low seal leakage rate during a simulated SBO event.
  - **Status:** The response was received on 4/29/2016). The response was found acceptable because the DCD is being revised to include a reference to the seal test report. This question is closed resolved.

# Technical Topics
## Section 5.4.7 – Shutdown Cooling

United States Nuclear Regulatory Commission
*Protecting People and the Environment*

**Technical Topics**

- System Design
  - Configuration Similar to Current PWR Designs,
    - Two independent trains – SCP interchangeable with CSP
  - Used during startup/shutdown and refueling operations
    - During shutdown and refueling RHR is placed in service below approximately 450 psig and 350$^{o}$F
- Evaluated against GL-2008-01 and RIS 2013-09
- Evaluated against NEI 09-10 Rev 1a-A – Prevention and Management of System Gas Accumulation

# Technical Topics
## Section 5.4.7 – Shutdown Cooling

U.S.NRC
United States Nuclear Regulatory Commission
*Protecting People and the Environment*

**Open Items**

- **RAI 8614, Question 05.04.07-4** – Provide ITAAC to the SCS design that addresses GL-2008-01 and NEI 09-10 with respect to managing gas accumulation during plant operations
  - **Status:** The response was received on 7/8/2016. The ITAAC was adequately addressed and in compliance with NEI 09-10 Revision 1a-A; however, NEI 09-10 was referenced in the DCD. The staff will discuss the need to include the reference with the applicant. This question currently remains in evaluation.

# Technical Topics
## Section 5.4.12 – RCS High Point Vents

United States Nuclear Regulatory Commission
*Protecting People and the Environment*

**Technical Topics**

- 10 CFR 50.34(f)(2)(vi) and TMI Action Plan Item II.B.1 require high point vents, and 10 CFR 50.46a specifies acceptance criteria
  - Remove non-condensable gases from high points in the RCS to maintain adequate core cooling (enhance natural circulation)
  - The RCS high points are the reactor vessel head, pressurizer, and steam generator U-tubes; however, individual U-tubes are not required to have high point vents (10 CFR 50.46a)
- APR1400 High Point Vent Design: Standard Configuration
  - Safety-grade vent paths: (1) reactor vessel head to in-containment refueling water storage tank (IRWST); and (2) pressurizer head to IRWST
  - Each safety-grade vent path has two parallel vent paths with two normally closed solenoid-operated valves in series
  - Small-break loss-of-coolant accident analyses bound potential vent line breaks upstream of isolation valves
- Operating procedures described at a high level in the DCD; detailed operating procedures to be developed by COL applicant

# Technical Topics

## Section 5.2.3 – Reactor Coolant Pressure Boundary

United States Nuclear Regulatory Commission
*Protecting People and the Environment*

**Open Item**

- **Open Item, DCD Clarification** - It was determined that a portion of DCD text providing additional detail beyond the staff criteria for establishing that austenitic materials used for the RCPB will not be sensitized should be removed from the DCD. Since the DCD will be granted finality by rulemaking, this removal is necessary as the staff could not make a specific regulatory finding regarding its accuracy.
  - **Status:** The applicant has been notified and the staff has scheduled a meeting with the applicant to review this.

# Technical Topics

## Section 5.2.5 – Reactor Coolant Pressure Boundary Leakage Detection

United States Nuclear Regulatory Commission
*Protecting People and the Environment*

**Technical Topics**

- Regulatory Requirements: GDC30, GDC2

- Review Guidance: SRP Section 5.2.5
  For GDC 30 on RCPB leakage detection, the review is based on RG 1.45.
  For GDC 2 on seismic design, the review is based on RG 1.29 and RG 1.45.

- Review Areas: leakage detection capability, sensitivity, and response time; leakage detection systems; seismic qualification; leakage instrumentation in the control room; prolonged low-level RCS leakage; separation of identified and unidentified leakage; intersystem leakage; plant TSs; initial testing program; ITAAC; and COL information items.

- Three RAIs were issued and all are being resolved pending confirmation in the next revision of the DCD.

- One COL information item.

# Technical Topics

## Section 5.4.1.1 – Reactor Coolant Pump (RCP) Flywheel Integrity

U.S.NRC
United States Nuclear Regulatory Commission
*Protecting People and the Environment*

**Technical Topics**

RCP flywheel analyzed to prevent fracture and possible missile.

- KHNP provided:
  - Material selection, fabrication techniques, preservice and inservice inspections and overspeed testing per NUREG-0800
  - Analysis per RG 1.14 (APR1400-A-M-NR-14001)
    - Critical speeds for ductile and non-ductile fracture
    - Fatigue crack growth

# Technical Topics
## Section 5.4.1.1 – RCP Flywheel Integrity

United States Nuclear Regulatory Commission
*Protecting People and the Environment*

**Open Items**

- **RAI 8641, Question 05.04.04.01-7** – The applicant needs to provide the method for determining fracture toughness.
  - **Status:** This question is currently waiting a response.
- **RAI 8641, Question 05.04.01.01-8** - The applicant needs to provide operating experience for the flywheel material 26 NiCrMoV 14-5.
  - **Status:** This question is currently waiting a response.
- **RAI 8641, Question 05.04.01.01-9** - The applicant needs to provide analysis using design acceptance criteria of 1/3 yield strength or provide justification for using 1/3 ultimate strength as the design acceptance criteria.
  - **Status:** This question is currently waiting a response.
- **RAI 8641, Question 05.04.01.01-10** - The applicant needs to provide analysis of the hub and why crack growth rates used for the flywheel are applicable to the specific flywheel material.
  - **Status:** This question is currently waiting a response.
- **RAI 8641, Question 05.04.01.01-11** – The applicant needs to provide in the DCD the maximum flaw size used in the analysis and that can be detected by the applicable NDE method.
  - **Status:** This question is currently waiting a response.

# Technical Topics
# Section 5.4.1.1 – Reactor Coolant Pump (RCP) Flywheel Integrity

United States Nuclear Regulatory Commission
*Protecting People and the Environment*

Open Items (continued)

- **RAI 8641, Question 05.04.01.01-12** - The applicant needs to include in the DCD the applicable PSI and ISI for the hub that is consistent with the flywheel to ensure the integrity of the hub is maintained.
  - **Status:** This question is currently waiting a response.

# Technical Topics
# Section 5.4.2.2 – Steam Generator Program

United States Nuclear Regulatory Commission
*Protecting People and the Environment*

## Open Items

- **RAI 494-8620, Question 05.04.02.02-6** - The assumed values for primary-to-secondary leakage described in the TS Bases (B 3.4.12 and B 3.4.17) appeared to be inconsistent with the accident analyses described in Chapter 15. Question 05.04.02.02-6 requested clarification of the leakage values in the TS Bases and how they are consistent with applicant's accident analyses and the Standard Technical Specifications (STS). Consistency between the accident analyses, APR1400 TS, and STS is needed to establish and implement a Steam Generator Program to ensure that tube integrity is maintained. This is part of meeting GDC 32.
  - **Status:** The response was received 7/26/2016. The response clarified the accident analysis assumptions and proposed revisions to TS Bases Sections B 3.4.12 and B 3.4.17 that are consistent with the accident analyses and STS. Therefore, the response is acceptable, this open item will be **closed,** and Question 5.04.02.02-6 will be tracked as a confirmatory item.

# ACRONYMS

U.S.NRC
United States Nuclear Regulatory Commission
*Protecting People and the Environment*

10 CFR – Title 10 of the Code of Federal Regulations
CCW – component cooling water
CVCS – chemical and volume control system
COL – combined license
DV – depressurization valve
FSAR – Final Safety Analysis Report
MCR – main control room
MOV – motor operated valve
PRT- pressurizer relief tank
PTLR – Pressure – Temperature Limits Report
PTS – pressurized thermal shock
PWR – pressurized water reactor
RAI – request for additional information
RCP – reactor coolant pump
RCPB – reactor coolant pressure boundary
RCS – reactor coolant system
RCSHPV – reactor coolant system high point vent
RG – Regulatory Guide
RHR – residual heat removal
RVHVS – reactor vessel head vent system
RWSP – refueling water storage pit
SDV – safety depressurization valve
SER – safety evaluation report
SRP – Standard Review Plan
SRV – safety relief valve