Official Transcript of Proceedings

NUCLEAR REGULATORY COMMISSION

Title: Advisory Committee on Reactor Safeguards
Metallurgy and Reactor Fuels Subcommittee

Docket Number: (n/a)

Location: Rockville, Maryland

Date: Tuesday, September 20, 2016

Work Order No.: NRC-2627 Pages 1-162

NEAL R. GROSS AND CO., INC.
Court Reporters and Transcribers
1323 Rhode Island Avenue, N.W.
Washington, D.C. 20005
(202) 234-4433

1
2
3
4 DISCLAIMER
5
6
7 UNITED STATES NUCLEAR REGULATORY COMMISSION'S
8 ADVISORY COMMITTEE ON REACTOR SAFEGUARDS
9
10
11 The contents of this transcript of the
12 proceeding of the United States Nuclear Regulatory
13 Commission Advisory Committee on Reactor Safeguards,
14 as reported herein, is a record of the discussions
15 recorded at the meeting.
16
17 This transcript has not been reviewed,
18 corrected, and edited, and it may contain
19 inaccuracies.
20
21
22
23

UNITED STATES OF AMERICA

NUCLEAR REGULATORY COMMISSION

+ + + + +

ADVISORY COMMITTEE ON REACTOR SAFEGUARDS

(ACRS)

+ + + + +

METALLURGY AND REACTOR FUELS SUBCOMMITTEE

+ + + + +

TUESDAY

SEPTEMBER 20, 2016

+ + + + +

ROCKVILLE, MARYLAND

+ + + + +

The Subcommittee met at the Nuclear Regulatory Commission, Two White Flint North, Room T2B1, 11545 Rockville Pike, at 8:31 a.m., Ronald G. Ballinger, Chairman, presiding.

COMMITTEE MEMBERS:

RONALD G. BALLINGER, Chairman

DENNIS C. BLEY, Member

MARGARET CHU, Member

MICHAEL L. CORRADINI, Member

JOSE A. MARCH-LEUBA, Member

DANA A. POWERS, Member

JOY REMPE, Member

PETER C. RICCARDELLA, Member

GORDON R. SKILLMAN, Member

JOHN W. STETKAR, Chairman

MATTHEW W. SUNSERI, Member

DESIGNATED FEDERAL OFFICIAL:

CHRISTOPHER L. BROWN

ALSO PRESENT:

TAE AHN, NMSS

KRISTINA BANOVAC, NMSS

KRISTOPHER CUMMINGS, NEI

DARRELL DUNN, NMSS

DONNA GILMORE, Public Participant*

ACE HOFFMAN, Public Participant*

MARVIN LEWIS, Public Participant*

BRUCE LIN, RES

MICHAEL LOMBARD, NMSS

DAMARIS MARCANO, NMSS

DAN OGG, NWTRB

RICARDO TORRES, NMSS

ANDREA D. VEIL, Executive Director, ACRS

JOHN WISE, NMSS

*Present via telephone

C-O-N-T-E-N-T-S

Call to order, Opening Remarks and Objectives 4

Dr. Ron Ballinger

Chairman of the Subcommittee

ACRS

Staff Opening Remarks 6

Mark Lombard

NMSS/DSFM

MAPS Report: Draft for Public Comment 11, 21, 54

John Wise 60, 66

NMSS/DSFM

Ricardo Torres 18

Darrell Dunn

Industry Presentation 73, 79, 91

Kris Cummings 98

NEI

Public Comments 100

Donna Gilmore 100, 106

Marvin Lewis 103

Ace Hoffman 105

Committee Discussion 107

P R O C E E D I N G S

8:31 a.m.

CHAIRMAN BALLINGER: On that auspicious start, this is a meeting of the Metallurgy and Reactor Fuel Subcommittee of the Advisory Committee on Reactor Safeguards. I'm Ron Ballinger, Chairman of the Subcommittee.

ACRS members in attendance today are Pete Riccardella; Margaret Chu; Dick Skillman; Dana Powers; Matt Sunseri; Dennis Bley, Chairman of the Committee; John Stetkar, aka the "Button Pusher Domo"; Jose March-Leuba, and Joy Rempe.

The purpose of today's meeting is to receive briefings for the Division of Spent Fuel Management on managing aging process in storage, the so-called MAPS Report, the draft report for comment. Also, NEI will present industry perspectives on MAPS.

The rules for participation in today's meeting were announced in The Federal Register on August 24, 2016. The meeting was announced as open to public. There have been no requests by members of the public to make comment.

A transcript of the meeting is being kept and will be made available, as stated in The

1 Federal Register notice. Therefore, we request
2 that all participates in this meeting use the
3 microphones located throughout the meeting room
4 when addressing the Subcommittee and press the
5 little -- make sure the little green button is on
6 or Member Stetkar will be after you.
7 Participants should first identify
8 themselves and speak with sufficient clarity and
9 volume, so that they can be readily heard. In
10 addition, please silence anything that beeps or
11 anything like that, unless it is necessary for your
12 life.
13 We have a bridge line established for
14 the interested members of the public to listen in.
15 The bridge line number and password were published
16 in the agenda posted on the NRC website. To
17 minimize disturbance, this public line will be kept
18 in a listen mode only. And yesterday's meeting was
19 awful with respect to the bridge line. The public
20 will have an opportunity to make a statement or
21 provide comments at a designated time towards the
22 end of this meeting.
23 One more note, Dr. Joy Rempe has
24 advised the staff of a conflict of interest, that
25 she has been supporting DOE on their activities to

1 develop sensors that might be used in some DOE
2 tests. Dr. Rempe will not participate in matters
3 related to that technical area. Do we need a gag?
4 I invite Mike Lombard, Division
5 Director, to introduce the presenters and start the
6 meeting. Mark?
7 MR. LOMBARD: Thank you. I appreciate
8 that.
9 So, our presenters this morning are
10 John Wise who is going to lead it off. He is up
11 there on the right. Ricardo Torres and Darrel
12 Dunn, and they will have their respective sections
13 of the presentation this morning. They all work in
14 the Renewables and Materials Branch here in the
15 Division of Spent Fuel Management, of which I am
16 the Director.
17 Just a few opening remarks from my
18 standpoint, and we appreciate the Subcommittee's
19 time this morning to discuss this important topic.
20 We have had some discussions on aging management
21 over the last several months and we appreciate this
22 opportunity again to bring the MAPS Report to you,
23 the Managing Aging Processes and Storage Report. I
24 still have a tough time saying that because, when
25 we first started talking about this, we talked a

1 storage aging management report and we quickly
2 found, after discussions internally, that that
3 would be confused potentially with the SAMG, Severe
4 Accident Management Guidelines. (Laughter.) So,
5 we changed the definition of -- actually, the real
6 Al Csontos and his team came up with the Managing
7 Aging Processes and Storage Report, the MAPS
8 Report. So, it is really a map kind of looking
9 forward and getting us through the renewal process.
10 We recognized the low risk of dry cask
11 storage. We have had some feedback from the
12 Subcommittee, and we have looked at the two PRAs
13 that were done for dry cask storage previously. We
14 recognize that it is a low-risk operation, but
15 there is also longer than anticipated storage times
16 for spent fuel in the absence of a repository, and
17 that is a competing consideration, as well as there
18 is not a lot of really documented experience for
19 dry cask storage.
20 So, when you look at those three things
21 and you put them together, really you don't know
22 how long these systems are going to have to sit on
23 the ground. So, that is an uncertainty that we
24 have rolled into our concept, our new regulatory
25 process that we have built over the last three

1 years and moving forward.

2 We started the initiative to create

3 this revised regulatory framework. We wanted it to

4 be operations-focused, something that could be

5 easily integrated into licensee inspection

6 programs, meld in with their existing inspection

7 programs and techniques and personnel, something

8 that would maintain the appropriate safety and

9 security margins, represent a reasonable burden on

10 licensees, not only those preparing the

11 applications for renewals, but those implementing

12 those commitments going forward.

13 But when we first started talking about

14 this, when Al came onboard just about three years

15 ago, three years ago next month, the big key to

16 this is a learning aging management program going

17 forward. So, these programs are set up to be

18 learning based on whether you meet or not meet the

19 acceptance criteria for the individual inspections,

20 but also based upon analyses that may be conducted

21 domestically and overseas and, also, any operating

22 experience that you may receive on similar systems,

23 both domestically and overseas.

24 It is recognized that some sites are

25 already conducting aging management inspections in

advance of them even submitting a renewal application to the NRC, which is a good practice. And we have had close collaboration with industry, which I think Kris may talk about in his discussion today.

That extensive engagement has been with external stakeholders, including the public, the industry, NEI. NEI has facilitated a lot of those discussions we have had with industry.

And we have come to a very good framework that includes the industry guidance 1403 document, which is complementary to our NUREG-1927, Rev. 1, which we have discussed with you a couple of times here in this very room. We expect to endorse that guidance, the industry guidance, in the near future.

We built the MAPS to provide pre-approved NRC aging management plans for selected dry cask storage systems. So, again, it not only reduces the burden on the NRC reviewers when they get the renewal applications that reference the MAPS Report sections, but also reduces the burden on the applicants when they prepare their applications. Right now, the MAPS Report, as it sits today, covers those systems that we expect to

1 receive renewals for through 2019, and future revs
2 of the MAPS Report will cover those systems that
3 are expected to be renewed through 2023.
4 We have had one or two discussions
5 about risk with the Subcommittee. I just want to
6 mention that, as we had our second discussion with
7 you all, we appreciate the feedback, especially
8 John Stetkar's feedback, of what you are really
9 trying to risk-inform. As we thought through that
10 feedback, we said, what are we trying to risk-
11 inform and how are we trying to do it?
12 So, what we have done, we have worked
13 with industry. We have come up with a little
14 different spin on that initiative going forward,
15 and we have changed the title to A Graded Approach
16 to Dry Cask Storage Regulation going forward.
17 We are engaged with NEI and the
18 industry on a regulatory issue resolution protocol
19 process that NEI has built over the years. It has
20 been successful for us twice now. We are two for
21 two, and we hope to be three for three as we put
22 the graded approach into that RERA process. And I
23 am sure we will have more discussions with the
24 Subcommittee on that topic going forward, but I
25 just wanted to give you an update on that.

1 So, we look forward to your input
2 today. With that, I am going to turn it over to
3 John Wise.
4 CHAIRMAN BALLINGER: I should make one
5 comment. We now have Dana Powers here. Either I
6 didn't see you or you weren't here when we went
7 around the table.
8 MEMBER POWERS: You did acknowledge my
9 presence.
10 CHAIRMAN BALLINGER: I did? Oh, I'm
11 sorry.
12 MEMBER POWERS: You are getting old and
13 forgetful.
14 CHAIRMAN BALLINGER: I do need to
15 retire.
16 (Laughter.)
17 MEMBER POWERS: It is time to retire.
18 (Laughter.)
19 CHAIRMAN BALLINGER: Okay.
20 MR. WISE: All right. Thank you.
21 As Mark said, my name is John Wise. I
22 will be going through the presentation here today.
23 With me are Darrell and Ricardo.
24 Just a few points of acknowledgment.
25 First of all, you have got to give credit where

1 credit is due. The MAPS name came from NEI, but it
2 is either Chris or Rob McCollum, one of you came up
3 with that name. So, we listen to industry's input
4 and we respond.
5 (Laughter.)
6 Secondly, our names are on this
7 presentation, but this actually was a very big
8 effort over the past year or 18 months or so. Not
9 we have our materials reviewers, which are here in
10 front of you, but other disciplines in the Division
11 of Spent Fuel Management, but our Office of
12 Research and the people that bore the brunt of the
13 work was our contractor, the Center for Nuclear
14 Waste Regulatory Analyses, the Center at Southwest
15 Research Institute. The same people that did a lot
16 of work on the reactor side on the Generic Aging
17 Lessons Learned Report actually contributed a great
18 deal to this report as well, and I will get into
19 that a little bit later.
20 And so, as I said, this was a lot of
21 work over the last year, 18 months. As Mark
22 alluded to, we are doing this so it pays us back
23 many times over in the form of efficient reviews.
24 I think of us as being about a 15-year delay with
25 where the reactors were in the renewals as far as

1 creating guidance to make the reviews efficient on
2 behalf of both the staff and the industry.
3 For example, I believe Calvert Cliffs
4 got the distinction of working through the first
5 reactor renewal license 15 years ago and all of the
6 pain that that involved, while the staff was trying
7 to develop guidance. They got to do it again about
8 15 years later for the spent fuel management side.
9 I wasn't here at the time, but I understand it was
10 a rather arduous process to come to a shared
11 understanding of what goes into a renewal
12 application for spent fuel storage and what is an
13 appropriate level of aging management. And so,
14 what we are doing here, again, is bolstering our
15 guidance to eliminate the uncertainty, so other
16 plants don't have to go through, for example, what
17 Calvert Cliffs went through a few years ago.
18 Go on to the next slide. This has been
19 stated before, but we just revisit it again. Our
20 past experience with the renewal of licenses -- we
21 are up to four or five or so -- have revealed the
22 need for expanded guidance, just more clarity.
23 Reduce the requests for additional information.
24 And so, a few years ago, there was a
25 major effort in our Division to revisit our

1 regulatory framework, and that was started with
2 NUREG-1927, which we have come here in front of you
3 at least a couple of times, and was issued in June
4 of 2016.
5 Today I am going to talk about what the
6 MAPS Report is doing that supplements that
7 guidance, so you understand what the distinction is
8 of why we need the MAPS when we issued a Standard
9 Review Plan. I will walk through the report at a
10 fairly high level. But, in short, the MAPS Report
11 is a technical document. It is full of technical
12 details on which aging effects we think are
13 considered credible, credible meaning they have the
14 potential to impact the safety function, if they
15 were left unchecked in some way.
16 Along those same lines, we are
17 developing other guidance documents. The NRC's
18 oversight of the aging management programs in the
19 form of, first, a temporary instruction, and
20 eventually it will become an inspection procedure
21 for the regions to use. And then, ultimately a
22 Regulatory Guide to kind of wrap all of this up to
23 give a clear, cohesive picture of how to use the
24 industry guidance, the NRC guidance for meeting the
25 regulations for renewal.

1 This is just a pictorial representation
2 on slide 3 of what I was just talking about.
3 Again, the Standard Review Plan 1927 was completed
4 a few months ago.
5 What has gone into MAPS has originated
6 in many documents that have come before this. You
7 think about lessons learned from the reactor side
8 in the Generic Aging Lessons Learned Report. We
9 pull in guidance that are part of the ASME Code and
10 various reports that have been written by the
11 Department of Energy and EPRI.
12 And so, I think what you will find is
13 the technical content of the MAPS shouldn't be
14 terribly surprising. We have gone through this
15 before on the reactor side. EPRI has written
16 reports on what are the aging mechanisms that can
17 affect systems structures and components. DOE has
18 written reports. The NRC has written reports.
19 There are just a lot out there that we have used to
20 build this guidance document. So, while we don't
21 have the operating experience or the experience
22 with inspections with dry storage systems at this
23 point, we certainly had a lot to draw on from other
24 areas to create this report.
25 MEMBER SKILLMAN: John, when is a good

1 time for us to ask specific questions on MAPS or
2 1927?
3 MR. WISE: I invite you to do it at
4 anytime you would like.
5 MEMBER SKILLMAN: Let me ask a
6 question, please.
7 MR. WISE: Sure.
8 MEMBER SKILLMAN: Mark introduced a
9 topic in terms of the importance, given the
10 uncertainties for how long these casks will sit
11 where they are going to sit. And in your
12 introduction to the MAPS Report, you cite 10 CFR
13 50, or 10 CFR 72.42, that basically says initial
14 licensing, 40 years, and then, we are talking about
15 extending 40. But throughout the MAPS Report, it
16 appears as though you communicate 60 years.
17 MR. WISE: Yes.
18 MEMBER SKILLMAN: So, 40 plus 40 sounds
19 like 80. Why is there this tollgate at 60 or this
20 stop, if you will, at 60?
21 MR. WISE: Yes, yes.
22 MEMBER SKILLMAN: Do you really mean
23 80?
24 MR. WISE: The answer is no, because we
25 have evaluated. The evaluations that were

1 performed in the MAPS Report were for a 60-year
2 timeframe. I am going to give you the backstory on
3 why that is the case.
4 First of all, the licenses issued to
5 date have been 20 years.
6 MEMBER SKILLMAN: Okay.
7 MR. WISE: And so, the renewal periods
8 add another 40, to bring you up to 60. Okay? But
9 it actually came from a more practical standpoint.
10 In a couple of slides later, I am going to tell you
11 where the technical information for this report
12 came from. That was from another effort that is
13 going on in the Division of Spent Fuel Management
14 called the Extended Storage and Transportation of
15 Regulatory Program Review, where the Commission,
16 back in 2010, asked the staff to essentially go
17 back and review the regulatory framework, the
18 technical framework, to examine it to see if it is
19 adequate to handle long storage terms.
20 In that process, a decision was made to
21 evaluate some specific timeframes; in fact,
22 consider which aging effects might be impactful for
23 specific timeframes. At the time, a decision was
24 made to look at a 60-year timeframe and, then, a
25 300-year timeframe. Okay, so that was an existing

1 project that has been going on for years.

2 And so, what we had done is we

3 essentially rolled that in. We rolled in the 60-

4 year timeframe conclusions or technical bases into

5 this report. So, it is more of a product of the

6 information that we had on hand, which was existing

7 evaluations for 60 years.

8 Now, that having been said, the entire

9 construct of this really renewal framework is we

10 are going to go out there and we are going to start

11 looking, and we are going to respond to what we

12 find. And I think Kris Cummings will be alluding

13 to this in his presentation, in that we got to have

14 programs that we go out and we look, but we adjust

15 those programs as needed as time goes by.

16 So, here what we have now is, yes, the

17 60-year timeframe review. We don't have a -- how

18 do I say it? -- there is no expectation that there

19 is going to be a special 60-year tollgate, I guess

20 I will say, because the entire construct of these

21 age management programs is we go out and look and

22 we will respond to the reactor operating experience

23 continuously and adjust the age management programs

24 continuously, based upon what we find. So, this

25 kicks us off, but I expect that aging management

1 programs will evolve.

2 Essentially, do you have anything to

3 add?

4 MR. TORRES: Yes. Just to provide a

5 little bit of background with the rule, the rule

6 was actually revised fairly recently, back in 2011.

7 As John said, all licenses, all specific licenses

8 and certificates of compliance so far have only

9 been initially licensed or approved for 20 years.

10 Back in 2011, when we added 72.42,

11 which deals with specific license renewal, and

12 72.240, when we modified that for CoC renewal, that

13 is when the request was made to extend the period

14 of the initial license up to 40 years. And I

15 emphasize that "up" because that is something that

16 we discuss internally. Considering what the

17 guidance is, if we were to get an application that

18 requests 40 years, is that something that we need

19 to consider?

20 But, like John said, this is a learning

21 AMP. So, the report should help addressing 80-year

22 initial license plus renewals when we get to that

23 point. But, so far, it is we are pretty far off

24 from there.

25 MEMBER SKILLMAN: Okay. Thank you.

1 CHAIRMAN BALLINGER: Along those lines,
2 in our discussions of 1927, it was mentioned that
3 there is a number of EPRI documents that are being
4 produced, one of which is the so-called Consequence
5 Analysis that, if I recall right, was supposed to
6 be due in November of this year. Is that correct?
7 MR. CUMMINGS: So, this is Kris
8 Cummings from NEI.
9 Yes, EPRI is working on a Consequence
10 Analysis. What they have due by the end of this
11 year is a literature summary. So, they are going
12 out and looking at some of those other Consequence
13 Analyses that have either been done in the context
14 of already-licensed casks that maybe weren't tested
15 or leak-tight. There has been some other work by
16 Sandia on consequence analysis where you consider
17 gravitational settling within the cask.
18 What they are doing this year is,
19 basically, summarizes all the literature. And
20 then, next year they are tasked to actually do a
21 Consequence Analysis, assuming a chloride-induced
22 stress corrosion crack that would go through a
23 wall, to look at what those consequences would be.
24 So, I hope that clarifies what is
25 happening this year versus what is happening next

1 year.

2 CHAIRMAN BALLINGER: To me, I think

3 that extends what they were doing out by a year.

4 MR. CUMMINGS: They were always tasked

5 with doing the literature review this year. It was

6 never on their plate to do the actual Consequence

7 Analysis this year. That has always been for

8 budgetary reasons within EPRI scheduled for next

9 year.

10 CHAIRMAN BALLINGER: Thank you.

11 MEMBER REMPE: Kris, just out of

12 curiosity, when they do the Consequence Analysis

13 next year, what time period will they assume? Or

14 will they have variable ones? Will they do like

15 assuming after 10 years of storage or after 20

16 years? Or what is the timeframe?

17 MR. CUMMINGS: Yet to be determined.

18 We are still working through after we get this

19 literature review done, obviously, a lot of the

20 details of the assumptions of what do you assume

21 the source term? You know, do you assume that it

22 is just the crud? Is your fuel intact? Is it not

23 intact? Those sorts of things are all things that

24 we are going to have to look at. I don't want to

25 prejudge what they are going to do, but I think

1 there would be some benefit at looking at maybe
2 some different scenarios to get a range of what the
3 potential consequences could be.
4 MEMBER REMPE: Yes, some different
5 timeframes.
6 MR. CUMMINGS: Yes, absolutely.
7 MEMBER REMPE: How much water, residual
8 water. I mean, there is a much of sensitivity
9 studies that would be interesting to look at.
10 MR. CUMMINGS: Right.
11 MR. LOMBARD: If I might also add --
12 Mark Lombard from DSFM -- the Office of Research
13 has finished up their Draft Level 3 PRA that
14 includes dry cask storage, and we are providing
15 some comments to them right now. That might be
16 something that you might want to take a look at as
17 we go forward. I can't remember their schedule,
18 but I thought they might be available for public
19 comment later on this calendar year.
20 MR. WISE: Thank you.
21 The next slide really reinforces why we
22 are here. If you look at the number of
23 applications that are coming, that we anticipate
24 coming in-house for renewal, you see that quickly
25 it becomes apparent that we need to have a very

strong guidance framework to allow us to tackle all those applications in a timely manner.

The review of renewal applications tends to be a heavy materials-intensive effort because a lot of it is issues such as corrosion, et cetera. And so, you are looking at half of our group here. So, we have a couple of more materials people and that is about it.

And so, if we are going to be tackling on the order of, you know, you are looking at six applications that cover 36 sites in 2020, we are going to have to have a very strong guidance framework, such that we get applications that are consistent and predictable and we can review those in an efficient manner.

MEMBER SKILLMAN: I don't understand that. This isn't a challenge; it is a curiosity question. So, you have six applications for 36 sites or 36 applications. You have got six applications for 36 sites. Why is that so complicated?

MR. WISE: It is not complicated, but it is time-consuming. And I guess I will give you a little perspective. Albeit, obviously, we have a different frame of reference from the reactor side,

1 just because of the scope of the work. However,
2 the review of a renewal application is very similar
3 to what you see on the reactor side as far as
4 tabulating all the components, tabulating all of
5 the different aging effects that might affect those
6 components, and then, the aging management programs
7 that are proposed to address those aging effects.
8 The size of the applications aren't
9 terribly different than a reactor site. And we
10 have a Division of Renewals on the reactor side,
11 and we have part of a Branch on the dry cask
12 storage side. So, really it is a resource issue.
13 Typically, we find, because we review
14 not just renewal applications but initial
15 applications for storage and transport, and you
16 throw on these renewals on top of that. It becomes
17 very clear we need to do something to make this
18 easier and more efficient, really just to be able
19 to handle those in a timely manner.
20 MEMBER SKILLMAN: Okay. Thank you.
21 Thank you.
22 MR. WISE: So, just reiterating what
23 will the MAPS report provide. First and foremost,
24 it is going to be clarity of the NRC staff
25 technical position. I think, to some extent, the

needed clarity was provided to a large extent in NUREG-1927, our Standard Review Plan.

And this takes it one step further with strengthening the technical position. And so, specifically, we will provide clarity on what our expectations are of which aging mechanisms are considered credible. And again, defining credible as mechanisms we think, if left unchecked or uninspected, could have the potential to impact the safety function. Identifying those upfront in this document and, then, following that up with aging management activities or aging management programs to address those.

It takes a lot of the guesswork out of the industry when they are preparing applications of what our expectations are. Again, from the staff's position as, it really will help the review, and with the caveat always being this is a guidance document. We don't want to shoehorn this to almost becoming a de facto requirement. We always have to keep that in mind.

But it is something that we think can help a lot. My sense is that the applicants will find this to be very helpful in the preparation of the applications.

1 Again, going in the second bullet, the
2 efficiency of our review. And so, if we get to a
3 point where, through this development of this
4 document, including the public comment period and
5 the public meeting, we plan to have a public
6 comment period to really hash out some of these
7 technical details where there may be some
8 disagreements between the NRC and industry on what
9 is considered a credible mechanism and what needs
10 to be done, to the extent that we can solve some of
11 those issues now, such that during a review of
12 applications we can focus on those parts where
13 there may be some disagreement.
14 So, I am just going to go very high
15 level through this document, but we are prepared to
16 dive into the details as you need. And so, we
17 included lots of background, backup slides, if you
18 want to dive into some of the details, what I will
19 talk about in the next few slides. But, for now, I
20 am going to keep it very high level, just to give
21 you a sense of how somebody would pick up this
22 document and use it.
23 First of all, I always hesitate when
24 somebody tells me they are going to read the MAPS
25 report because I think of it more as a handbook

1 that you go to reference because it is a very thick
2 report full of lots of detail. The first few
3 chapters are really just the overview and getting
4 the definitions out of the way. Then, you get into
5 Chapter 3 which is a technical basis, and I will
6 walk through these quickly in the subsequent
7 slides. And then, Chapter 4 is really applying the
8 technical bases to specific storage systems, and
9 then, finally, example, aging management programs.
10 So, the technical basis, first of all,
11 I did a quick count yesterday and I think there is
12 about 200 separate discussion sections and
13 conclusions in the MAPS Report on if a particular
14 aging mechanism is considered credible or not
15 credible. And that was a lot of work. Again, our
16 Office of Research, and supported by the Center for
17 Nuclear Waste Regulatory Analysis, did a lot of
18 work on that.
19 What you are going to find in the
20 technical bases section is really systematically
21 going through the different components, the
22 different materials that the components are
23 constructed, and for those materials, what
24 environments they are exposed to, and coming to a
25 conclusion of which mechanisms are considered

1 credible, aging mechanisms are considered credible.
2 And so, what you find in Chapter 3 is
3 essentially, like I say, 200 brief, I guess I will
4 say literature reviews. And the idea was, it is
5 not a complete picture for every discussion of
6 every aging mechanism. That would be an enormous
7 task. But it was enough to support our conclusion
8 of whether we felt a particular aging mechanism was
9 credible or not. So, that is what you will find,
10 our little snippets of literature review followed
11 by a conclusion.
12 And this is something that anybody can
13 go to and, essentially, like a handbook, go back
14 and reference and read, okay, what is the basis?
15 What are the references we used for determining
16 whether this was credible and this was not? And
17 so, it is a really tool that both the staff and the
18 applicants can use.
19 MEMBER SKILLMAN: So, John, to your
20 prior response, why is this such a burden, your six
21 applications for 36 sites? Should we assume that,
22 for each of these six applications, what are the
23 matrices that are down in Section 3 of MAPS have to
24 be verified for each of the six applications for
25 the 36 sites? If you say yes to that, I can

1 understand the depth of the effort that you are
2 communicating.
3 MR. WISE: Yes. Yes, I will give you
4 like a 30-second synopsis of what our view entails.
5 So, the application comes in. An application goes
6 through and tabulates every component that is part
7 of that storage system. So, I am just going to say
8 there is 100 lines. I don't know. Is that a good
9 guess? And for each one of those components, the
10 applicant defines the materials, the environments,
11 and then, tabulates which aging effects could
12 impact that component.
13 So, now you have gone from 100 lines,
14 but those really sort of start to branch, because
15 now you have different aging effects. And so, you
16 start and, then, all of a sudden, you are talking
17 about hundreds of little conclusions on the
18 applicant's part that we independently check. So,
19 we will march through all of those components the
20 materials are made out of, look at their
21 environments, and determine are we fine with the
22 three that they identified as being important, as
23 being credible, or not; then, we need to perhaps
24 question on the ones we think are missing. So, any
25 given application does have hundreds of little

1 conclusions in there that we do independently
2 verify during our review.
3 MR. TORRES: If I can add something to
4 that, for the CoCs, there are multiple amendments
5 associated with that CoC. So, quite often, we have
6 an application that has multiple canister types,
7 canister designs, overpack designs with different
8 materials. And those we have to consider, too.
9 For instance, we have an application in-house now
10 that has 14 amendments with multiple, I think five
11 or six overpacks, you know, multiple canister
12 designs, too. So, that factors into it, too.
13 MR. WISE: Yes, that is an excellent
14 point. Like in a reactor license renewal, there is
15 just one point. As Ricardo alluded to, we are
16 reviewing an application that has kind of 14
17 different canisters in a way, because it was
18 changed over time, and Site A used version 1 of
19 that canister and Site B used version 2. And it is
20 just that it really starts to open up a lot of
21 permutations that we have to worry about.
22 MR. TORRES: And each of those
23 canisters is broken down by its subcomponent to
24 evaluate environments.
25 MEMBER SKILLMAN: That detail is clear

1 in MAPS. I mean, you have done a thorough job of
2 going through the parts, the pieces, what is a
3 credible and what is a not credible environment for
4 deterioration. So, I understand why you can get
5 into these permutations and combinations that would
6 just take hours and hours for review. So, I
7 understand.
8 It just seems it is an overwhelming
9 amount of work for perhaps a very small payback.
10 On the other side of the equation, though, if you
11 don't go into that level of detail, you have
12 probably not done your job. So, I understand what
13 you are communicating.
14 CHAIRMAN BALLINGER: As an
15 administrative point, if you go through, the whole
16 report, you will discover that there are
17 inconsistencies in units, micrometers, inches,
18 millimeters. And there has been an attempt to put
19 SI and, then, English in parentheses, or whatever
20 it is, but it is not adhered to.
21 MR. WISE: Okay.
22 CHAIRMAN BALLINGER: So, somebody ought
23 to administratively go through and make sure you
24 have got --
25 MR. WISE: Yes.

1 CHAIRMAN BALLINGER: -- an internally-
2 consistent set of units.
3 MR. WISE: Okay.
4 CHAIRMAN BALLINGER: Also, on the
5 technical side, if you go and track down some of
6 those references, some of the numbers that you
7 quote in terms of general corrosion rates and
8 things like that, a very, very wide range,
9 especially for general corrosion and things like
10 that. That at the high end are for very onerous
11 environments, environments that would never in a
12 million years, maybe literally, exist in the
13 canister.
14 So, I would think some thought might be
15 given into -- I don't know how you go about doing
16 it because, then, now it becomes an engineering
17 judgment as to what the most probable environment
18 range is likely to be to prevent licenses or
19 applicants from running off and trying to justify
20 that the corrosion rate is really not 10 mils per
21 year, for example.
22 MR. WISE: Yes, you are entirely
23 correct in that. So, every one of these little
24 analyses ultimately came down to coming up with an
25 engineering judgment call. Okay, what do we need

1 to present this to say whether or not this is
2 something we need to pay attention to or something
3 we can ignore?
4 I admit that, for the most part, we
5 tend to be more conservative than not. There is no
6 question about that. But we will certainly be
7 interested when we put this out for public comment
8 and we talk to the industry about, hey, we have got
9 to rein in this section or not, you know, that I
10 look forward to having discussions like that.
11 CHAIRMAN BALLINGER: Yes. For example,
12 the atmospheric corrosion rates in some cases are
13 higher than buried-in-soil moist soil corrosion
14 rates, which there may be some overlap, but I think
15 there that shouldn't be, yes.
16 MR. WISE: Okay. Well, we will do our
17 best. We are constantly fiddling with this
18 document, right? We can't stop fiddling with it.
19 And some of the points that you have brought up, I
20 know internally we have been wrestling with those
21 as well. And so, we will take that into
22 consideration as we continue to sort of refine this
23 and as we go through the public comment period and
24 have discussions with the industry as well. We
25 will continue to refine things.

1 MEMBER REMPE: So, as a point of fact,
2 the way you characterize the amount of water in
3 your writeup in the MAPS Report remaining, and
4 then, you cite the Jung reference. If you go back
5 to the Jung reference and the way it is documented
6 there, I think it is characterized a bit different
7 in what they found in the literature. And then,
8 they did the analysis assuming something. I just
9 thought it was inconsistent, and I might consider
10 you looking at that again and maybe revising the
11 text.
12 MR. WISE: Okay. All right. Well, we
13 will look at that. I know that accurately
14 reflecting the Jung reference, in particular, has
15 been something we have talked about to make sure it
16 is clear what we are saying, because it is true
17 that the Jung reference assumed a certain moisture
18 content.
19 MEMBER REMPE: And assumed that certain
20 things were functioning and things like that.
21 MR. WISE: Exactly.
22 MEMBER REMPE: I am just saying be
23 careful.
24 MR. WISE: Yes, yes.
25 MEMBER REMPE: But, yes, I think you

1 got my point.

2 MR. WISE: We got your point and we

3 will look at it, definitely.

4 MEMBER POWERS: I wonder a little bit

5 about consistency in the regulatory process. We

6 have looked at the proposal from the staff on

7 renewing the licenses for research and test

8 reactors. What they conclude is the small little

9 research reactors aren't pressured; they don't

10 operate at high temperatures; they have relatively-

11 low usage; they sit in pools of water.

12 And they said we just don't really need

13 to issue licenses of finite terms; we just need

14 these guys to come to us and give us an FSAR or

15 update every five years.

16 On the other hand, you come in, here

17 are some devices, they aren't pressurized. They

18 just sit there in the environment. They don't

19 operate at very high temperatures. And you have

20 come up and said, well, there are just many, many,

21 many credible mechanisms by which these can age,

22 and we need to explore each one of those in detail

23 and have finite licenses.

24 There seems to be a discontinuity in

25 the regulatory process. Can you explain that a

1 little bit to me?

2 MR. WISE: Yes, I don't know how I can

3 explain it. There is no question that our

4 regulatory process for renewals is patterned after

5 reactors. There is no question. I mean, that is

6 the language which we have.

7 MEMBER POWERS: Well, these are

8 reactors.

9 MR. WISE: Yes.

10 MEMBER POWERS: They are reactors,

11 every bit a reactor.

12 MR. WISE: Yes. But I can't explain to

13 you why our regulations look the way they do at

14 this point. What we are trying to tackle right

15 here is, given the current regulations which

16 require the identification of aging effects and

17 aging management programs, this is a process for us

18 to do that as efficiently as possible.

19 So, the broader question of why our

20 regulations look more like reactors and not

21 research reactors, I am not sure I can answer that.

22 I'm sorry.

23 CHAIRMAN BALLINGER: Okay. That is one

24 of the reasons why I keep harping on this

25 Consequence Analysis, and I am a little bit

1 dismayed. I think we got the cart, in my opinion
2 at least, we got the cart before the horse, that
3 somebody should have done the Consequence Analysis
4 long before we did any of this other stuff because,
5 based on that, I think we would discover that the
6 consequences of a leak, for example, however you
7 define it, would be so low. And that might provide
8 direction in the overall license renewal process,
9 but we are sort of backwards about it now and
10 delaying the consequence for another year.
11 MEMBER POWERS: We are going to end up
12 having a regulatory system that says, okay, you
13 have got this research reactor located in the
14 middle of MIT that we are going to not have
15 licensed, but just have them to FSARs because their
16 corrosions are so slow we don't have to worry about
17 it. Whereas, we have got these things that have
18 decaying inventories located off in the middle of
19 an isolated space, well away from the dormitories
20 at MIT, and they need to have this detailed years-
21 long license renewal process. This seems to be
22 something that I would have a hard time standing in
23 front of the public and justifying.
24 MR. WISE: Well, I want to put this
25 into some perspective from the standpoint of just

1 the general equipment industry, I guess I will call
2 it. Ultimately, this all boils down to aging
3 management programs. Yes, there is this big effort
4 in identifying aging effects and linking them to
5 specific aging management programs, but at the end
6 of the day we end up with a series of inspections
7 and an inspection procedure at a fuel storage site.
8 And I will contend those inspections in
9 the grand scheme of things are not out of line with
10 what you see in other areas. Now I will give you
11 an example. Every above-ground storage tank for
12 petroleum products, above-ground oil storage tank
13 non-pressurized, the American Petroleum Institute
14 has regulations for the inspection of those. Every
15 single above-ground storage tank gets inspected
16 visually and UT every five years to look for
17 corrosion on the external surface. And every
18 storage tank gets looked at internally every 10
19 years.
20 So, I think there has got to be an
21 acknowledgment of this. We are not way off in left
22 field of what is considered a reasonable approach
23 for assuring that we maintain this high-level waste
24 in a confined system.
25 For the most part, if you look at our

1 aging management programs, for the most part, what
2 you are going to find is it involves somebody
3 walking along the casks and taking a look. There
4 are certainly those areas that are hard to get to
5 that require additional effort, but those are done
6 on a very limited sampling basis.
7 For example, the Stress Corrosion
8 Cracking Aging Management Program, which has been
9 the subject of a lot of discussion in the
10 development of 1927, we are talking about those
11 sites that have the potential for stress corrosion
12 cracking. You look at one, you know, every five
13 years or so.
14 But, if you get away from that
15 potentially onerous inspection, you really are
16 talking about getting personnel walking around the
17 casks every five years or so to make sure the
18 concrete is not cracking or, if it is a metal cask,
19 you are not experiencing a significant amount of
20 corrosion. I contend that, when I think about the
21 Petroleum Institute guidelines that require every
22 five years UTs of every single above-ground non-
23 pressurized storage tank in the United States, I
24 think it is reasonable.
25 CHAIRMAN BALLINGER: I will bang you on

1 your own petard.

2 (Laughter.)

3 API 579, which is the document I think

4 you are probably referring to, that discusses the

5 consequences of a leak, and inspection intervals

6 were established based on the corrosion rate of

7 plain carbon steel in an atmosphere. And so, there

8 was a consequences done, followed by establishing

9 the inspection interval based on established

10 corrosion rates. So, the Consequence Analysis came

11 first, yes. No?

12 MR. WISE: I am not disagreeing with

13 you that this idea of looking at the consequences

14 is going to be valuable, but that is not where we

15 are today. We have a reality where we are sitting

16 here today and we don't have a Consequence

17 Analysis, and we have casks that are out there.

18 And what is reasonable? Is it reasonable to have

19 personnel walk around their casks every five years

20 or so to make sure that they are in good condition?

21 I would say yes.

22 MR. CUMMINGS: I just wanted to add,

23 there has been Consequence Analysis that has been

24 done. The NRC and EPRI have both done

25 probabilistic risk assessments that included

1 probability and consequences. We haven't done the
2 dose consequence in the context of a chloride-
3 induced stress corrosion crack, but we have
4 certainly already established that these are very
5 robust systems. The consequences are very low; the
6 risk is very low associated with what could
7 credibly happen to these casks.
8 So, we don't have it in the context of
9 what we have been talking about with CISCC, but we
10 certainly have had various either dose consequence
11 analysis or risk analyses that have continued to
12 show that the risk or consequences associated with
13 events with dry cask storage are benign. They
14 don't have an impact on public health.
15 MEMBER POWERS: But our response to
16 that is to create this license renewal application
17 that takes year to prepare and review?
18 MR. CUMMINGS: We have been trying to
19 work with the NRC to make sure that this approach
20 is commensurate with the risk. The graded approach
21 that -- and I will talk a little bit about it -- is
22 focused on the certificates of compliance and the
23 level of detail or the licenses, the level of
24 detail that goes into those, simply to provide more
25 flexibility to the licensees to modify their aging

1 management programs as they do inspections and find
2 out more information.
3 And so, it is something that we
4 continue to have discussions with the NRC about. I
5 will talk a little bit about some of the bigger-
6 picture issues of what is the regulatory framework.
7 From an industry perspective, we certainly feel
8 like the framework currently for dry cask storage
9 is, I would call it more burdensome than what would
10 be expected, given the consequences or risks
11 associated with these structures.
12 MEMBER POWERS: You, both speakers,
13 have emphasized that, as time and experience grows,
14 the program and the licensees' activities will
15 respond to what they find. Isn't that more
16 consistent than with the licensing under Soffart's
17 process where every five years you would issue an
18 FSAR report and say, "Here is what I found and here
19 is what I am doing about it," rather than a
20 licensing approach?
21 MR. CUMMINGS: Well, the regulations
22 are what the regulations are. And so, we have to
23 relicense them currently. One of the approaches
24 that we took with tollgate assessments was to do
25 that on a 10-year basis, to look at the information

1 and look at whether the aging management programs
2 are appropriate, given the information that we
3 learn in those 10 years.
4 MEMBER POWERS: Well, I understand
5 that --
6 MR. CUMMINGS: Right.
7 MEMBER POWERS: -- a part of our job is
8 to advise the Commission when the regulations are
9 disjoint, and preferably when they are irrational.
10 It seems to me, Professor Ballinger and Chairman
11 Bley, that we have here a discontinuity, an
12 apparent discontinuity, that maybe we need to
13 advise the Commission about.
14 I mean, somehow a big chunk of steel
15 sitting in a little concrete fixture out in the
16 middle of a field and a test reactor sitting in a
17 pot of water next to the MIT dorms strikes me as
18 about commensurate in their level of risk, being
19 familiar somewhat with your risk assessments on
20 what happens if I pop one of these casks. Then,
21 they are roughly the same at the site boundaries.
22 To be sure, the emergency action plan, the PAG that
23 we apply is exactly the same.
24 I mean, it seems to me we have a
25 discontinuity on regulatory philosophy here, that

1 we at least need to inform the Commission, "Well,
2 you have got this, and good luck you justifying it
3 because we can't justify it," unless we can.
4 MR. LOMBARD: This is Mark Lombard with
5 DSFM.
6 If I may, when we talk about
7 Consequence Analyses, there is more to it I believe
8 than just the dose, the offsite dose or the dose to
9 members of the workforce around the SFC itself. If
10 you look at structural capacity of the system, one
11 thing, as we look at the design of the systems, the
12 baskets are not welded to the canister all the way
13 down. They are welded typically, most canisters,
14 at the top I think, probably not even the bottom of
15 the canister but at the top to hold the basket in.
16 So, if you have circumferential
17 through-wall crack of that circumferential weld
18 that holds the two pieces of the canister together,
19 what does that do to your structural capacity if
20 you have a seismic event? And we haven't done that
21 Consequence Analysis. EPRI hasn't done that
22 Consequence Analysis. And that should be part of
23 the approach going forward.
24 When we look at the source term,
25 potential source term between a research reactor

1 and high-level waste in a spent fuel cask, it is a
2 different source term, potential source term. So,
3 we have got to apply the appropriate safeguards, if
4 you will, or safety considerations to high-level
5 waste versus I think a research and test reactor.
6 We are doing the best we can within the
7 regulations. And I have to be honest, if there was
8 a recommendation to change the regulations to
9 soften them somewhat, how would that score in the
10 overall rulemaking process? Not a safety issue.
11 So, I don't think it would be a high or a medium.
12 It would probably be in the low category. So, what
13 is our probability of getting that rulemaking
14 through in the current environment and future
15 environment? It is pretty low, just like it would
16 score in a rulemaking process.
17 So, we are doing the best we can within
18 the regulations that we have to work with to build
19 a process, and have built a process, that has a
20 learning component to it. Don't forget, the
21 learning component has maybe three potential
22 outcomes. One is do nothing to change your
23 inspection program or inspection frequencies going
24 forward. One is to shorten the time between
25 inspections. And a third is, if you have good

1 operating experience, you are meeting your
2 acceptance criteria, there might be an argument
3 made there to increase the time between
4 inspections. So, it is built, again, to be
5 learning in all directions, a 3-dimensional I guess
6 learning program going forward.
7 So, it is trying to build as much
8 flexibility into the program as possible. And this
9 approach has been built with close collaboration
10 with industry. To tell you the truth, I think
11 there is a lot of understanding between industry
12 and the NRC of what is reasonable going forward
13 with this approach. And we have been shoulder to
14 shoulder in heavy collaboration as we have built
15 the MAPS, as we built 1927, as they built 14-03,
16 and listened to our comments on 14-03 as well.
17 So, I think there is a lot of agreement
18 across the board that this isn't a bad approach
19 going forward. It actually is a pretty good
20 approach and very flexible.
21 MEMBER BLEY: I am going to go back,
22 since Dana pointed to us, Ron, we did write a
23 letter on this some time ago, in the last meetings
24 we had with these folks. We might not have pointed
25 out the disjunct nature quite as starkly as you

1 brought up, Dana, but we did point out the
2 potential for not matching the associated risk.
3 At least for me, this learning process
4 idea is the heart of this thing working, but it is
5 also the thing that makes me very nervous. We have
6 built a structure that could turn into a monster
7 and could create efforts way beyond what seems
8 reasonable for these kinds of facilities.
9 I guess the one thing that is different
10 for me between this and a research reactor isn't
11 the accident approach, but it is the large quantity
12 of radionuclides that could be around and other
13 things and accidents would make a real difference
14 here, but that is not what is under investigation
15 in this program.
16 Anyway, we can certainly do that, Dana.
17 CHAIRMAN BALLINGER: I think I would be
18 a little bit careful to use the word "soften"
19 because I don't think that is what would be
20 happening. Okay? But I remind, Recommendation No.
21 2 in our letter was "A future revision should be
22 undertaken that placed a parity on the development
23 of a risk-informed approach which includes analysis
24 of event consequences for aging management of dry
25 storage systems." So, that was the recommendation

1 that we had.

2 And Darrell and I went back and forth

3 on the way across, if I recall, at the stoplight,

4 yelling at each other about --

5 (Laughter.)

6 MR. DUNN: It was a causal

7 conversation.

8 (Laughter.)

9 You raise some good points with that

10 discussion and the need to have an aging management

11 program that could identify, reliably identify,

12 degradation, if it occurred, but also take into

13 account the risk associated with it. So, we

14 understand the comment.

15 CHAIRMAN BALLINGER: Just to build

16 again on what Dana was saying, a research reactor

17 sort of like the one in Cambridge, although that

18 would be like an accident there would be sort of

19 like curing a disease, but the population around

20 that reactor is much --

21 MEMBER POWERS: Just because you are

22 about to retire does not mean that you cast

23 dispersions on one of the nation's leading

24 institutions of higher learning.

25 (Laughter.)

1 CHAIRMAN BALLINGER: But the population
2 around that is much different than the population
3 around a site where an ISFSI would be. And so, the
4 consequences there are also different in that
5 respect.
6 MEMBER CHU: Can I --
7 MR. LOMBARD: Yes, please go ahead.
8 MEMBER CHU: My experience coming from
9 the disposal end, we have a slightly different
10 consideration. It is really the long, long-term
11 consequence how these are aging, given there is no
12 Yucca Mountain right now.
13 And so, I am glad that all this
14 technical work has been done. And then, I am glad
15 that EPRI is working on the Consequence Analysis.
16 Just like Joy was saying, how long are they doing
17 the consequence? I am hoping they will do it much
18 longer than the regulatory period of 60 or 80
19 years, because they might be sitting there for a
20 long time.
21 And, you know, from a disposal
22 perspective, a lot of these things, they are not
23 going to stay where they are. They are going to be
24 opened up or repackaged. I know we used to sit
25 around and say, what would they look like, those

1 storage things? You know, are they going to fall
2 apart? Can they have structure integrity, so you
3 can handle them? I really don't have the answer.
4 The Blue Ribbon Commission suggests
5 that DOE works on a consolidated interim storage
6 facility. More than one, I don't know. And then,
7 they propose DOE start with decommissioned, closed
8 reactors. I think these are the older, and
9 probably there is a hodgepodge of ways they used to
10 store things. And then, we will be sitting around
11 scratching our heads and say, can we do it? How
12 much handling needs to be done? And then, how do
13 we know?
14 I wish NRC can extend that kind of work
15 and, then, put red flags on certain type of
16 situations. So, in the very long-term you kind of
17 know what remedial actions might be taken rather
18 than just open them up and see.
19 MR. CUMMINGS: So, yes, let me try to
20 address that. In terms of your comment about the
21 shutdown sites and DOE prioritizing those, they
22 have actually already done that work. They have a
23 report -- I can certainly get you that information
24 and that report -- where they have gone and
25 assessed what it would take to get the casks that

1 are currently loaded and stored at the reactors or
2 the shutdown sites, the ISFSIs that don't have an
3 operating reactor.
4 I would say that that is the domain of
5 DOE to do that versus that is something NRC would
6 have a mandate to do, simply because they are a
7 regulator and they need to approve the design of
8 the casks themselves and ensure that it is safe.
9 But, in terms of the logistical information of how
10 the federal government or DOE would get that off
11 the site, I would look that that would be a DOE
12 activity. And they have done that, and they are
13 evaluating the sites that they don't have in their
14 current report because they have recently shut
15 down.
16 MEMBER CHU: But DOE wouldn't know what
17 is inside those casks.
18 MR. CUMMINGS: But the utilities that
19 store those casks do know what is in those, and DOE
20 has worked with those utilities that have those
21 shutdown sites.
22 MEMBER CHU: Would they have all these
23 technical bases extrapolations information? That
24 is sort of what I am --
25 MR. CUMMINGS: So, those casks would be

1 licensed for a period of time. They may also be
2 licensed for transportation. Some of them are not.
3 But DOE has got some work to do on the
4 transportation side. But, in terms of the extended
5 storage and our framework for these casks sitting
6 in their current locations for a period of time --
7 and we look at the license period, 60 years --
8 those are things that the industry and NRC is
9 working on. If DOE decides to do a consolidated
10 storage site, then they would have to deal with
11 some of those issues. But, again, my expectation
12 is that would be within the construct that we have
13 already identified for these casks that are
14 licensed with the NRC.
15 MEMBER CHU: I understand what you are
16 saying. What I am saying, there may be valuable
17 information from an RFC that you guys can share
18 with DOE, so DOE doesn't have to independently
19 verify or estimate or guess.
20 MR. CUMMINGS: Right.
21 MEMBER CHU: That is really my point
22 because I think we have got all the information
23 from the technical work.
24 MR. WISE: I will just jump in and,
25 then, let Mark talk because he has probably been

1 waiting in the wings.

2 Bullet one: for the last several

3 years, our Office of Research has worked with

4 Southwest Research Institute to develop the

5 technical bases for the degradation mechanisms that

6 can occur up to 300 years. That report, that is

7 being completed right now. So, it is still in

8 progress, and we are, more or less, marching

9 through the last bits of it in the next few months.

10 And I don't want to speak to Office of

11 Research. I don't think they have a representative

12 here that can speak to it exactly. But I

13 anticipate early next year that in some form the

14 results of the 300-year analysis of aging effects

15 will be released, keeping in mind the portion of

16 that work that is 60 years is essentially the MAPS

17 Report. But the MAPS is part of a broader effort.

18 So, I think that, in part, that will address what

19 you are asking about right now.

20 MEMBER CHU: Yes. Thank you.

21 CHAIRMAN BALLINGER: I hate to be a

22 one-trick pony here, but I am looking at a slide

23 from one of the presentations of several months ago

24 now, an EPRI slide which identifies the reports.

25 And there are two, an Aging Management Guidance to

1 address potential chloride SEC probabilistic
2 environment integrity assessment. That is due
3 November 2016, at least on this slide. And then,
4 the Dry Cask Storage Welded Stainless Steel
5 Canister Breach Consequence Analysis Scoping Study.
6 That is December 2016. So, we may be wondering
7 about the definition of the word "is" now.
8 MR. CUMMINGS: No, I think it is the
9 definition of what is contained in those reports
10 that are described in that presentation that you
11 have.
12 CHAIRMAN BALLINGER: Okay.
13 MR. CUMMINGS: The probabilistic
14 failure was looking at the -- I would call it
15 comparative probability between cracking occurring
16 in a canister. The scoping study is what I was
17 talking about with a literature review.
18 CHAIRMAN BALLINGER: But the November
19 report is important as well.
20 MR. CUMMINGS: Yes, the Aging
21 Management Guidelines Report is, I believe,
22 scheduled for the end of this year from EPRI.
23 CHAIRMAN BALLINGER: Okay.
24 MR. LOMBARD: If I may add a few more
25 points, there is a lot going on in these dry cask

1 storage systems. It is not always easy for me to
2 determine that from just looking at the pictures
3 and looking at them actually in operation. But
4 another consideration of through-wall cracks is
5 especially in the short-term, and that short-term
6 is in the matter of years, is maintaining that
7 helium blanket on the dry cask storage system to
8 maintain the temperatures below 400 degrees C, so
9 that the condition of the fuel is maintained over
10 that time period, until enough heat is transferred
11 out that it becomes older and colder fuel. So,
12 there is a lot of safety functions over maintaining
13 the confinement, maintaining a pressure boundary
14 around the dry cask storage system.
15 Another piece is, you know, as we build
16 this graded approach -- and when I came onboard a
17 little over four years ago, looked at our system,
18 and I had a lot of the same observations that Dana
19 Powers and others have made today and in previous
20 meetings that we have had with them; that the risk
21 is low. We acknowledge that, that the risk is low.
22 The regulatory framework was built initially for
23 the 20-year storage period, before the systems
24 could be moved to Yucca Mountain. Obviously, that
25 is not an option. And now, the uncertainty of the

1 time that they are going to sit on the ground is a
2 strong consideration of our regulatory path going
3 forward.
4 But, as we build this graded approach,
5 our hope for the graded approach -- and we were
6 looking for a pilot application of it probably
7 early 2017, calendar year 2017 timeframe -- we hope
8 that that will, then, give us a framework as 2017
9 and into 2018 that we can use to then risk-inform,
10 if you will, but to apply that graded approach more
11 accurately to dry cask storage system regulation
12 going forward. That would include the MAPS Report.
13 That would include the Aging Management Programs
14 that utilities, licensees, can use, certificate-
15 holders can use going forward, to then look at what
16 things are more important, what things are more
17 significant from a safety and security standpoint,
18 and then, scale back on those things that are not
19 as significant, not as important going forward.
20 But, until we have that framework to
21 use as a basis for it, the regulations are guiding
22 us at this point. We are trying to do the best we
23 can within the regulations as written today.
24 MR. WISE: Okay, and that concludes
25 that slide.

(Laughter.)

CHAIRMAN BALLINGER: He thought this was going to be a fairly short meeting.

(Laughter.)

MR. WISE: I am going to wrap up this slide with just one statement. For at least the area that I am most involved in, which is the steel, stainless steel and metal aging effects, I think we will find, if any of you are familiar with like the EPRI documents, like EPRI mechanical tools for reactors, where they basically give the flowchart of you have this material and this environment. Is pitting corrosion important? Is general corrosion important? It is a great document that I use, I look at all the time.

I think anybody who is familiar with that will not be surprised at the ultimate conclusions of what are the important aging effects in the MAPS Report. I think you are not going to find a lot of controversy there, I guess is what I will say.

MEMBER SKILLMAN: Let me ask a question to that point. I am in the MAPS Report. I am in the portion that is looking at aging mechanism evaluations in what are credible environments and

1 not credible environments. You are going to get to
2 this later on, but I am afraid we are going to
3 timeout, so I want to get my question out there.
4 For nickel alloys, for general
5 corrosion, pitting, stress corrosion crack and
6 fatigue, stress relaxation, basically, you
7 indicated that outdoor environment is not credible.
8 I guess one side of me says, well, from a practical
9 perspective, that makes sense; stainless steel
10 outside, dry environment, the risk is very low of
11 failure.
12 But my real question is, how do you
13 come to that conclusion? Was this a consensus
14 conclusion? Was this guided by ASME material
15 guidelines? What allowed you to say this is not
16 credible?
17 MR. WISE: First and foremost, it was
18 looking at any and all references to help us to
19 make that conclusion, whether it was an ASME
20 handbook that is referenced a lot in this or
21 specific corrosion books related to nickel in this
22 case. In every single one of these evaluations a
23 couple of things came into play, reviewing the
24 technical literature that had any data on behavior
25 of that material in this environment.

1 But, at the same time, there did have
2 to be a consideration of, okay, what is the
3 component we are really worried about? Because
4 like for nickel, there is really not that much
5 nickel. And so, we have to think, okay, for that
6 nickel, for when nickel rarely appears, it appears
7 in this particular component, its function might
8 drive whether or not a particular aging effect
9 would ever be considered to challenge that
10 function. I don't know if I am explaining that
11 that well, but, essentially, the function of the
12 component matters when you think about whether an
13 aging effect could potentially challenge the
14 function of that component.
15 MEMBER SKILLMAN: Well, what you have
16 made there is a judgment.
17 MR. WISE: Yes.
18 MEMBER SKILLMAN: And I don't contest
19 the appropriateness of your making that judgment,
20 but I think this is kind of getting over to Ron's
21 point. If those judgments were guided by, if you
22 will, Consequence Analysis, you might find that
23 some of the torturous effort that you are going
24 through can end because the consequence is so low.
25 I understand your saying, hey, we are

1 abiding by the regulations; we are doing this
2 because we need to. But at some point it seems
3 that you are at that point of diminishing return.
4 MR. WISE: Well, I guess I will give
5 you an example. Because, for the most part, we
6 have tried not to go overboard. I will give you an
7 example.
8 For the stainless steel canisters that
9 tend to be -- what are they, a little over half-
10 inch or so? -- a little over half-inch, pitting
11 corrosion, okay, we will use that as an example.
12 We all know stainless in the right environment
13 could pit, but is it reasonable that pits could
14 propagate through a half-an-inch on the order of 40
15 years? For the most part, we have said, no, a
16 pitting corrosion from the standpoint of the pit
17 itself challenging containment, we ultimately have
18 said, no, that pitting corrosion that challenges
19 containment in and of itself is not credible.
20 Now I chose a poor example because we
21 associate those pits with a potential initiation of
22 stress and cracking, so it is a terrible example to
23 bring up. But, at the same time, we did make a
24 judgment call to be specific; we don't consider
25 pitting corrosion to be capable in and of itself to

propagate through a half-an-inch of stainless steel. So, that is an example where we do actually try to do that. You know, we try to say what makes sense for the particular components we have before us. So, there is no question, there were a lot of judgment calls here. There is no question about that.

But we cannot stress that we went through a lot of detail, but the reason why we went to all this excruciating detail is so that we can come to a reasonable conclusion and, then, not have to revisit it again every single application. We can just say it is done. We have made a conclusion. We all agree on it. We don't have to keep talking about it, and it saves everybody time.

MEMBER SKILLMAN: Okay. Thank you, John.

MEMBER STETKAR: Ron, let me?

I know you want to get to slide 5, but it is my job to prevent you --

(Laughter.)

Oh, I'm sorry. No, never mind.

I have been listening to it. I know you guys have to do what you have to do within the context of the way the regulations are currently

1 written. I got that.

2 We have had some briefings. We all

3 know that the Near-Term Task Force from Fukushima,

4 Recommendation 1, went down in flames. And we are

5 fairly reasonably aware that the risk management

6 regulatory framework went down in flames.

7 The agency has formed this group called

8 the Risk-Informed Steering Committee. Then, I will

9 read its objective. "The Risk-Informed Steering

10 Committee is an NRC senior management committee

11 that will provide strategic direction to the NRC

12 staff to advance the use of risk-informed

13 decisionmaking and licensing, oversight,

14 rulemaking, and other regulatory areas, consistent

15 with the Commission's PRA policy statement."

16 It seems, to me anyway, that a lot of

17 the discussions we have been having this morning

18 are prime discussions to be addressed by this

19 Steering Committee. I do note, however, that NMSS,

20 in particular, is not represented on that Steering

21 Committee. It has representatives from NRO,

22 Research, NRR, NSER, and Region I Regional

23 Administrator.

24 Have you folks interacted with this

25 Committee at all?

1 MR. LOMBARD: Yes, we have.

2 MEMBER STETKAR: You have? Good.

3 MR. LOMBARD: Scott Moore typically

4 attends for NMSS --

5 MEMBER STETKAR: Good.

6 MR. LOMBARD: -- as the Deputy Office

7 Director. I have attended some of the Risk

8 Steering Committee meetings and, also, some of the

9 other interactions they have had with the

10 Commission.

11 So, we are plugged into them. It is

12 hard to get them to focus attention on dry cask

13 storage because there is so much that they do

14 discuss in the reactor world, but we are a

15 participant of the Risk Steering Committee.

16 MEMBER STETKAR: Thank you. I am glad

17 we have that on the record.

18 MR. WISE: Okay. Moving on to Chapter

19 4, Chapter is really where we are applying the

20 technical basis conclusions to specific systems

21 for, essentially, providing an example of, okay,

22 what does this look like when we take those

23 conclusions and we look at a specific system.

24 So, what we have done, we have taken

25 four systems, as you can see there, and those

1 address a variety of designs, horizontal systems,
2 vertical systems, concrete overpacks, metal
3 overpacks, and then, finally, the bolted cask with
4 the TN systems.
5 And so, the idea was to take a
6 selection of systems and demonstrate how the
7 technical basis can be applied. You could think of
8 it as analogous to the NUREG-1801. The GALL Report
9 does something similar where it is applying which
10 aging effects are for the different systems in the
11 plant. But in here we have chosen different dry
12 storage systems to handle on a case-by-case basis.
13 And so, Chapter 4 really introduces
14 those systems just in a general description, but,
15 then, it gets into really tabulating the components
16 of that system and applying the technical bases for
17 demonstrating, okay, where do we need to worry
18 about aging and where do we need to develop an
19 aging management program?
20 While we chose initially a selected set
21 of systems, overall, there are lessons to be
22 learned. So, if you didn't happen to have this
23 particular system, you can understand the process
24 and our guidance for other systems as well.
25 But we do intend to keep the MAPS

1 Report updated, as additional work is done, as we
2 evaluate more systems, which actually is happening
3 right now. And it is part of this larger effort to
4 look at aging both short-term, shorter-term, 60
5 years, but also 300 years.
6 But, then, you end up with a table.
7 This is sort of a snapshot of a portion of a table.
8 To anyone who has looked at any license renewal
9 document either on the reactor side or the dry
10 storage side, this is what you see. You see on the
11 left side a component, what its function is, the
12 structural function in this case, what it is made
13 out of, the environment.
14 Now let's talk marching through the
15 aging mechanisms. Do they need an age management
16 program or not? If so, there is an example aging
17 management program that is pointed to. If not,
18 there is a simple no.
19 And this was sort of the manifestation
20 of all of those ethical bases on those particular
21 systems. So, an applicant, if you are using in
22 this case a HI-STORM 100 system, there is a lot of
23 clarity on the applicant's part. Okay, for our
24 system, what does this mean? What does the NRC
25 expect? And maybe where do we need to push back?

1 Again, this is a guidance document. Where do we
2 need to challenge the NRC on these particular aging
3 effects?
4 But, again, that can all be happening
5 in the application process as opposed to the
6 request for additional information process, which
7 we are trying to avoid these long application
8 reviews. If the industry knows what is in our head
9 before they create an application, they can head
10 off a lot of questions and proactively provide
11 bases for deviating, just like they do on the
12 reactor side.
13 The reactor side, they come in with
14 their application. They say, you know, "We are
15 more or less consistent with you, but not on these
16 points, and this is why we are not going to be
17 consistent with you." And that way, we don't have
18 to have that back-and-forth that prolongs the
19 application process. Let's make things more
20 consistent.
21 And so, we have these sort of tables
22 for those four systems I just mentioned.
23 Ultimately, the conclusion may be no aging
24 management is needed or it might point to a
25 specific program. And we have in the MAPS Report a

1 series of aging management programs, example
2 programs. Three of these you are very familiar
3 with, if you have been involved in the review of
4 the NUREG-1927, because essentially they come from
5 1927.
6 In 1927 there was a decision made to
7 throw out a few examples, because, again, we felt
8 there was really a need for clarity on what are we
9 really looking for as far as the amount of detail
10 that goes into an aging management program. And
11 so, in NUREG-1927, our Standard Review Plan, we
12 presented three of them. And those are the ones
13 marked with the asterisk there.
14 And so, the MAPS Report essentially
15 builds on that because those were a few examples.
16 But, if you really want to cover all the
17 permutations of the components and the aging
18 effects, you have got to fill in the blanks. And
19 that is what those other programs are for, for
20 external surfaces of metallic components, and that
21 would be like a metallic overpack, the ventilation
22 systems, the bolted cask seal. Bolted casks are
23 unique in that they have seal leakage monitoring
24 equipment.
25 Transfer casks, which we really don't

1 get a lot of discussion, but often they are within
2 the scope of the renewal process. Transfer
3 casking, those casks that take canisters from the
4 pool out to an overpack. And then, high-burnup
5 fuel monitoring program, which is monitoring a DOE
6 effort.
7 For the interest of time, I wasn't
8 actually going to go into details of all these, but
9 we do have backup slides and we can go into detail.
10 So, I will wrap up here real quickly to meet our 10
11 o'clock conclusion point. But, at the same time,
12 we have a lot of backup slides, if you would like
13 to get a little synopsis of what goes into these
14 various programs.
15 But, again, the point was in those
16 aging management tables we wanted to make sure that
17 every aging effect that we identified as credible
18 found a home in an aging management program. So,
19 you can draw a line.
20 And again, a lot of these programs, a
21 few of them are things that applicants are largely
22 doing now, both the cask seal leakage, ventilation
23 system monitoring. Even the transfer casks have
24 maintenance tasks that cover a lot of the aging
25 management activities.

1 But, then, the other ones like external
2 surfaces monitoring, reinforced concrete
3 structures, you are talking about walking around
4 your facility and looking at the outside of the
5 casks. And then, we have one that is potentially
6 onerous in getting into the overpack to see the
7 potential stress corrosion cracking, but, again, we
8 are looking at that as something to be done on a
9 sampling basis, because, again, we need to get in
10 there to look because we haven't looked yet. And
11 we just want to see if this is something we need to
12 pay attention to.
13 MEMBER REMPE: Before you leave --
14 MR. WISE: Oh, sure.
15 MEMBER REMPE: -- just a nit --
16 MR. WISE: Sure.
17 MEMBER REMPE: -- on page 385, when you
18 talk about the high burnup, you have "the DOE
19 gathered," like past tense, "similar experimental
20 confirmatory data to support the technical basis
21 for storage of high-burnup fuel during the first
22 period of extended operation." And I am sure you
23 know that they have not gathered anything yet.
24 They are hoping to in the future, I believe, but
25 the reference is the test plan that you are citing.

1 So, I think it is just a typo or whatever.
2 MR. WISE: Change it to future.
3 MEMBER REMPE: "Will be," yes.
4 (Laughter.)
5 MR. WISE: So, very quickly, how is
6 somebody going to use this document? As in any
7 renewal document, either the reactor or the spent
8 fuel storage document, the applicant goes to their
9 technical bases documents, FSAR in this case on the
10 upper right; tabulates all the components, what it
11 is made out of, and then, eventually, uses the
12 lessons that we have laid out in the technical
13 basis document for identifying the MAPS example
14 aging management programs.
15 And you go to those. In this
16 particular case, the outer shell of the HI-STORM
17 100 system is steel. It is exposed to outdoor air.
18 It could have some general pitting, general
19 corrosion, pitting corrosion. What we are going to
20 do is say we will do the external surfaces
21 monitoring program which says, ultimately, you are
22 going to do visual inspections once every five
23 years. You are going to walk around your facility
24 and just visually inspect the outside of these
25 canisters every five years, simply to make sure

that we don't see any degradation and we think to challenge any safety functions. So, that is just an example of how somebody would kind of use this document to work their way through their program, through their application.

MEMBER MARCH-LEUBA: Just for my edification, I am thinking here, when you are doing this licensing, are you licensing the canister or the application? When I follow these tables, I see how you license the canister. What do you do to decide?

MR. WISE: So, that is a larger licensing issue. So, there are two means or avenues for storing spent fuel on an ISFSI. One, you can, essentially, if you are a reactor with a Part 50 license, you can use a system like the HI-STORM 100 system, whose design we have already approved. We have issued, in that case, we have issued a certificate of compliance to the owner of that system. In this case, it is Holtec.

They came in, essentially, and said, can you approve this design? So, we issued a certificate of compliance for the HI-STORM 100 system, and any Part 50 licensee can use that pre-approved system without coming in with a separate

application for us. Essentially, they already have a license for storing fuel in that particular pre-approved cask. And there are some things they need to do onsite to make sure it is actually appropriate for that site. But, by and large, that is one avenue.

So, a second avenue is a plant can come in or a site can come in, and come in with an application independent of these pre-approved and say, "So, I am going to use this system. I am not using a pre-approved system. I am going to use this system." And so, it is incumbent on them to describe the entire system, and that is called a site-specific license.

And so, there is a lot of -- how do I say it? -- the burden of a lot of licensing process on the certificate of compliance is on the owner of the system or in this case Holtec. But, if you don't use that as a site, that pre-approved cask, then the burden is on you to describe the system and show that it is going to maintain safe storage of fuel. So, there is an option. You can do it either way. And the only caveat to that is only power plants can use the pre-approved option.

MEMBER MARCH-LEUBA: Sure. Only power

1 plants do it, though.

2 MR. WISE: Yes, yes. Well, if you

3 don't have a Part 50 license, not everybody does --

4 MEMBER MARCH-LEUBA: Oh, oh.

5 MR. WISE: -- you cannot. And

6 understand that there is a history. For a while,

7 this option of using a pre-approved didn't exist.

8 So, that is why you will see more commonly the

9 older sites, like Calvert Cliffs came in with a

10 site-specific license and they didn't grab a pre-

11 approved. North Anna is another example that used

12 -- they kind of came in for their own license for

13 the TN-32 cask, but it was before we had approved

14 that cask. So, they have a site-specific license.

15 And so, it is options; they have options.

16 MEMBER MARCH-LEUBA: Okay.

17 MR. WISE: So, what we would like to do

18 is we would like to issue this product out for

19 public comment. And the idea would be probably a

20 45-day public comment period, to be in line with

21 what we have done in the past. And then, have a

22 public meeting in the middle of that for the

23 industry stakeholders as well as the public

24 stakeholders to hash through a lot of these issues

25 that have been touched on a little bit, these

1 technical issues. And I also want to come back to
2 you in the spring and publish this in the summer.
3 Again, this is all to get some
4 clarifying guidance out there for that bar chart I
5 showed you several slides ago that showed all these
6 licenses coming in for renewal in a few years.
7 Know that we actually already have our
8 eyes on Revision 1 to this. Revision 1 really is
9 just considering more storage systems. So, when we
10 were evaluating all these aging mechanisms, we had
11 those four systems in mind. While there might not
12 be many changes, we are sort of marching through
13 all the other systems out there to make sure we
14 have covered all the bases. And so, we envision
15 having a Revision 1 which in the grand scheme of
16 things won't be terribly different, but it will
17 just have a fuller description of the implications
18 of aging for the other systems that we haven't
19 spoken about here.
20 And that is all I have today, but,
21 again, we have lots of backup slides if you want to
22 talk about any of the details of the aging
23 management programs.
24 CHAIRMAN BALLINGER: Any questions from
25 members?

1 (No response.)

2 I have a comment, which is just a
3 thought that jumped into my mind, which is probably
4 dangerous. And that is, you guys have done all
5 this dog work on identifying mechanisms, rates, and
6 all this kind of stuff, and published the rates and
7 things. Is there any thought to actually including
8 that data as appendices to this document, so that a
9 licensee can make use of that all in one place? In
10 other words, if you say the corrosion rate of plain
11 carbon steel is dah-dah-dah, dah-dah-dah-dah in
12 this environment, why not stick the data in an
13 appendix, so a licensee can go to appendix A,
14 corrosion rate data, pick it up, and not have to go
15 and do the same dog work that you had to do?

16 MR. WISE: Well, that is a lot of work.

17 (Laughter.)

18 CHAIRMAN BALLINGER: It was a lot of
19 work to start with, right?

20 MR. WISE: No, you are correct.

21 CHAIRMAN BALLINGER: So, you can just
22 dump all that lot of work in a dumpster somewhere
23 or make use of it.

24 MR. WISE: Well, I guess we had in mind
25 that, if we had the references we used, it is there

1 for people to look at. I see the value in what you
2 are saying. We have a finite number of resources,
3 unfortunately. So, we did envision doing that.
4 MR. DUNN: No, I think you are right.
5 I think that, to the extent that we could, we
6 provided clear references to where we obtained
7 information. Tabulating all that stuff could be
8 done, but, then, you even create a more onerous
9 document for you to revise because all those
10 documents that you references, ASME handbooks and
11 those things, get revised and updated. And then,
12 you have the responsibility of updating that
13 subsequently in future revisions. So, I am not
14 sure that that would be a valuable thing for us to
15 do, rather than provide a reference to the users to
16 have.
17 MEMBER STETKAR: There is a downside
18 also, and I know nothing about corrosion, but I
19 have seen it in other areas; that when numbers get
20 published -- and this will eventually be a NUREG --
21 when numbers get published in a NUREG, despite the
22 fact that it is only a NUREG, those numbers become
23 NRC-endorsed numbers by both the industry and the
24 staff. And it is very difficult to justify
25 deviations from them if you get new information.

1 Citing things as a historical reference is fine.
2 It is a historical reference. So, in addition to
3 the onerous nature of updating things and actually
4 publishing it, there is that bit of a concern.
5 CHAIRMAN BALLINGER: Point well-taken.
6 Remarkably, we are actually on time,
7 except for my last comment, which pushed us over.
8 So, we will be in recess until 20 minutes after.
9 Thank you.
10 (Whereupon, the above-entitled matter
11 went off the record at 10:03 a.m. and resumed at
12 10:20 a.m.)
13 CHAIRMAN BALLINGER: Okay. We are back
14 in session.
15 Kris, the floor is yours.
16 MR. CUMMINGS: Great. Thank you very
17 much. So, thank you, for the NRC and the ACRS, for
18 inviting NEI to give a presentation here to the
19 ACRS.
20 I am going to talk a little broader and
21 talk about the framework. So, I was actually very
22 encouraged by the earlier discussion where we were
23 talking about the framework. It is something that
24 we have had continual conversations with the NRC
25 about.

1 And then, I will come back at the end
2 and talk a little bit about the MAPS in the context
3 of NEI's view on where we think it provides some
4 efficiencies, and in the review process
5 specifically.
6 First, I want to point out, I think,
7 things that we are aware of, but I want to get it
8 on the record about some of the unique things about
9 dry cask storage. First, they are robust. We know
10 that. They sit there. They do nothing. They are
11 passive systems. They don't have any cooling fans
12 or any active components associated with them,
13 which is why we develop aging management programs
14 rather than on the Part 50 side, where we have
15 maintenance programs for active components.
16 We have mentioned before the risk is
17 very low. We have seen these PRAs that were done,
18 I think in 2007 or that timeframe. They are five
19 to six orders of magnitude below the thresholds
20 identified as negligible risk from a regulatory
21 point of view.
22 We have gone on the record before
23 saying we don't need new PRA analyses. Whether you
24 refine it more, you include some things like
25 degradation or something into it, okay, so instead

1 of 10 to the minus 12, you are 10 to the minus 10.
2 You are still really low in terms of comparison,
3 comparing to the threshold of negligible risk.
4 The other thing that is very unique
5 about dry cask storage -- and I will take it back
6 to that discussion that we were having on research
7 reactors -- is that the consequence of risk goes
8 down with time. We have a reduction in decay heat.
9 We have a reduction in radiological source term.
10 Reactivity goes down with time because of the
11 change in nuclides with decay time, and offsite
12 dose. That is something that is unique to dry cask
13 storage versus an operating reactor where it tends,
14 like with power uprates, if anything, it stays the
15 same because you are constantly loading fuel into
16 the reactor. So, you have got kind of a constant
17 baseline because you are always operating at
18 essentially the same parameters.
19 MEMBER SKILLMAN: Hey, Kris, I would
20 agree that the margins of safety increase with
21 time, assuming that your containment mechanisms'
22 degradation rate remain constant or increase.
23 MR. CUMMINGS: Sure. Yes, assuming you
24 maintain the confinement factor.
25 MEMBER SKILLMAN: Bingo.

1 MR. CUMMINGS: Absolutely.

2 MEMBER SKILLMAN: So, there is a caveat

3 associated with that.

4 MR. CUMMINGS: And that is the one

5 caveat with that, is that you are maintaining the

6 system in the way that it was designed. And so,

7 the aging management programs are really developed

8 to ensure that you maintain that, that you are,

9 one, detecting it or inspecting for it and, two,

10 then if you do find something or do find more

11 likely precursors of some of these potential

12 degradation mechanisms, that, then, you correct it

13 before it becomes a compliance issue with not

14 maintaining confinement as it is written in the

15 certificates of compliance.

16 MEMBER SKILLMAN: I agree with you, but

17 I think that that points to the importance of

18 John's comment that the real protection here is an

19 inspection system or an inspection protocol and

20 frequency --

21 MR. CUMMINGS: Yes.

22 MEMBER SKILLMAN: -- that is sufficient

23 in duration and thoroughness, that you can confirm

24 that your containment is being maintained.

25 MR. CUMMINGS: Agreed, and I am going

1 to talk about a couple of things that the industry
2 has been doing, in conjunction with the things that
3 the NRC has been requiring, that will help give us
4 the sort of information that we are looking for and
5 the confidence that those systems and programs are
6 working in the way that they are intended to.
7 MEMBER REMPE: There is the other
8 point, of course, that unless we have a Yucca
9 Mountain, that you are adding more because you have
10 more casks out there, too. So, there is that
11 point, too, when you say, well, the margin
12 increases on a per-cask base, but if you keep
13 adding more casks, that is not true.
14 MR. CUMMINGS: Well, but you are adding
15 casks because you are taking the fuel out of the
16 spent fuel pool. So, again, if you start to look
17 at a total system, whether it is in the reactor, in
18 the pool, or in the casks, or in a disposal
19 facility, but I think that is a little beyond the
20 scope of this.
21 MEMBER REMPE: It is, but it would be
22 nice if we could find someplace to ship it, is all
23 I was trying to say.
24 MR. CUMMINGS: That is something NEI
25 can agree with, absolutely.

1 MEMBER POWERS: I don't know. Your
2 risks go down if I move it from the sites to an
3 interim storage facility, ala Blue Ribbon
4 Commission.
5 MEMBER REMPE: It depends which people
6 you are evaluating the risk for. The people near
7 the plant, I would think as long as the interim
8 storage facility is in another state or in Nevada
9 for the final storage facility, that would be
10 different. But, again, we are talking which people
11 you are talking about, right
12 MEMBER POWERS: It takes the societal
13 measure of risk. So, I don't have a locality. It
14 is not clear to me that risk changes because I add
15 in the transportation risks. And then, I locate it
16 at a much larger facility which has all of its
17 vicissitudes and whatnot. It seems to me, I mean,
18 I was adamantly suspicious -- I wouldn't say
19 "opposed," but suspicious -- of this onsite cask
20 storage until I went to one and saw that these
21 things pose no risk whatsoever.
22 MR. CUMMINGS: Yes, from my
23 perspective, we can maintain those systems safely
24 wherever they are, whether they are at the
25 individual sites or whether they are at a

consolidated interim storage site. But a consolidated interim storage site can certainly provide an overall cost/benefit in terms of some of these sites have to maintain security, to some extent emergency planning, at each of those individual shutdown sites now. If you consolidate those sorts of things in one of these individual locations, consolidated, you can make some cost/benefits over time, because you certainly do have the transportation cost to get it there. But it is not an insignificant cost at these shutdown sites to maintain security and emergency planning and maintenance and aging management programs, and other things that we have to, to ensure that we meet the regulatory requirements.

MEMBER POWERS: Like I say, deep bore hole is the answer to everything.

(Laughter.)

MR. CUMMINGS: All right. So, improving the regulatory framework, why do we feel that it is important to do this? First of all, we have 30 years of experience with dry cask storage. The first one was 1985. So, we do have a decade's worth of experience with dry cask storage systems. We continue to load these. We have somewhere

1 around 2500 loaded. We certainly envision that
2 being the paradigm in the near future. Any of
3 these potential political solutions of consolidated
4 storage or Yucca Mountain or another repository are
5 going to take time to develop it and license.
6 Efficiencies can be gained if we
7 recognize the low risk of dry storage and that it
8 is appropriately recognized in the regulations. I
9 think the conversation this morning, earlier this
10 morning, was I think very appropriate to this
11 point.
12 And so, within NEI and the industry, we
13 are looking at various targeted proposals to either
14 modify or tweak the regulations or look at how we
15 can do it within the current regulations;
16 incorporations of the principles of the proposed
17 rulemaking, which is criteria for what goes into
18 the certificate of compliance or the license, and
19 explicit recognition of aspects of defense-in-depth
20 that have been put into the design of these storage
21 systems are the way that we are looking at
22 increasing the efficiency of the regulatory
23 process, whether it is what we submit to the NRC or
24 the actual process that they use to go through
25 reviewing and approving the designs that are

1 postulated to them.

2 So, within NEI, we have presented on

3 1403. I won't go into tremendous detail on this,

4 but, essentially, it is we have developed a

5 consistent format and content for the license

6 renewal applications, so that industry and NRC both

7 understand what the expectations are for the level

8 of detail and information to go into the license

9 renewal application.

10 Operations-based aging management that

11 is through the learning aging management programs,

12 as Mark talked about it. As we go through this

13 process of doing inspections and gaining more data,

14 collectively, what are we learning about the

15 programs that we have put in place and are they

16 appropriate in terms of are we looking for the

17 right things and are we looking at those mechanisms

18 on the appropriate time scales?

19 The big thing within 1403 is sharing of

20 the operating experience amongst the dry cask

21 storage community. That is the AMID database that

22 is now up and running. And we are now starting to

23 get some of the historical records put into that,

24 whether it is the Calvert Cliffs inspections, the

25 Diablo Canyon inspections, the Hope Creek

1 inspections, although I don't think that report has
2 come out from EPRI quite yet. Those sorts of
3 things we want to start populating that database
4 with to get some of that historical stuff. And
5 then, as we start going through inspections, we
6 will start having the utilities populate that
7 database.
8 And then, the last one being periodic
9 tollgate safety assessments on about a 10-year
10 basis, where you go back and look at the data and
11 information inspections that have been acquired
12 since you last, basically, looked at your aging
13 management programs and assessing whether you are
14 doing the appropriate inspections and frequency of
15 inspections on a regular basis.
16 So, the next improvement to the
17 regulatory framework that Mark alluded to is an
18 RIRP. It is short for Regulatory Issue Resolution
19 Protocol. We have used this successfully twice
20 before, once on stress corrosion cracking of top
21 nozzles; the second on the chloride-induced stress
22 corrosion cracking. Really what we are doing is
23 trying to provide, I would call it a project
24 management framework on how we interact with the
25 NRC on a regulatory issue of significance that we

1 see.

2 In this case, it is really focusing on

3 the certificate of compliance of license content.

4 We have got certificates of compliance that in our

5 perspective are not commensurate with, the level of

6 detail is not commensurate with the low level of

7 risk. I believe the new Homes Amendment is over

8 300 pages. Most of it is in the approved content

9 section. And so, we are looking at what in that is

10 redundant, and I will get to a little more detail

11 about some of our thoughts on how we can improve

12 that.

13 The CoC content, in and of itself, is

14 proportional to cost, the size of it, you know,

15 what is in it. CoC amendments require the CofC-

16 holder to actually prepare the document. Usually,

17 they take their current amendment and they look at

18 what do they need to add, new fuel types. You

19 know, maybe they need to add some non-fuel

20 hardware. Do they want to increase the heat load,

21 those sorts of things?

22 Then, there are review fees associated,

23 which is paid by the CofC-holder to actually get

24 the new amendment or the license approved. And

25 then, there is implementation, and that is a cost

1 on the part of the licensee, that they need to
2 update their procedures for loading, preparation of
3 the cask, putting it on the cask, maintenance of
4 the cask. They have to go out and periodically
5 inspect the vents to ensure that they are not
6 blocked. That is all costs on the part of the
7 licensee to implement either a new cask system or a
8 new amendment on their part.
9 The fuel selection package complexity,
10 that is not an insignificant effort. And a lot of
11 that is predicated on the size and detail of the
12 certificate of compliance, and it is particularly
13 the approved content section. You basically have
14 to demonstrate that the fuel that you are putting
15 into the cask meets all of the various requirements
16 that are specified in the certificate of
17 compliance.
18 And then, you also have the 72.2212
19 that essentially John was alluding to, a general
20 licensee using a pre-approved design. The licensee
21 has to show that that design meets the parameters
22 of their site, so that their seismic is bounded by
23 the analysis. That is probably one of the more
24 important. They have to do a site-specific dose
25 analysis for their individual configuration of

1 their SFC. Those are the sorts of things in the
2 212. They also, of course, have to show that they
3 meet all of the certificate of compliance
4 requirements.
5 An individual site may need to do that
6 for multiple cask systems or multiple amendments.
7 I think the one site that has the most number of
8 casks, it is somewhere on the order of five or six
9 where it is either different systems or different
10 systems with different amendments, and they have to
11 keep track of all of the different licensing bases
12 of the different casks or different amendments that
13 they have onsite. And given that an FSAR may be
14 2,000 pages long and a CoC is 300 pages long, doing
15 that now for multiple systems and multiple casks,
16 cask amendments, is not a small administrative
17 task.
18 So, what we are really looking at in
19 this RIRP is to try to bring the CoC content in
20 line with the low potential for dry cask storage to
21 affect public health and safety. This inordinate
22 detail creates needs for amendments that are not
23 safety-significant. In my previous life with
24 Holtec, we did a license amendment request to add
25 instrument tube tie rods to the approved contents

of the cask. That had no impact on radiological, no impact on thermal. It really was a "no, never mind" for all of the technical disciplines, but because the approved the contents at the time required non-fuel hardware to be licensed or to be described in the approved content, that needed a license amendment to be able to add something as benign as an instrument tube tie rod into that cask system.

Feel free to ask questions. I know I am going quickly, but I am trying to get us out of here for lunch.

And then, it also restricts the CoC-holder and the licensee's ability to use the 10 CFR 7248 process, which is the design changes or changes under licensee approval without NRC approval. So, there are opportunities. We see significant opportunities to simplify the certificate content without affecting dry cask storage safety.

MEMBER SKILLMAN: Kris, is the 7248 the cask equivalent of 5059?

MR. CUMMINGS: Yes, it is. Yes.

MEMBER SKILLMAN: Okay. Is that used frequently?

1 MR. CUMMINGS: Yes. So, I would say
2 that it is used frequently on the part of CoC-
3 holder to address issues that occur in fabrication.
4 So, you know, they do a weld and maybe there is
5 some little issue of a weld or they have a material
6 that is maybe not quite as thick or thicker than
7 what they might have analyzed in the FSAR. They
8 would assess that sort of a change under 7248,
9 determine that it doesn't have an impact on safety,
10 doesn't address a compliance issue, and then, they
11 would provide that documentation to the users of
12 that system, that that design change, for lack of a
13 better word, is acceptable and still within the
14 bounds of the license that was approved by the NRC.
15 On the part of a licensee, like a
16 general licensee, they usually do that more in line
17 with operational procedures. So, the FSAR may have
18 a description of how you drain dry/backfill the
19 system itself. If they need to tweak that for
20 specific activities within their operating
21 facility, then they may do those sorts of
22 assessments under 7248. And that is a
23 generalization, but that is what we have seen.
24 MEMBER SKILLMAN: Could you give us an
25 idea of how frequently the licensees would use

7248? I am thinking specifically of a licensee that has a license that allows full fuel assemblies, and they end up with some parts and pieces, and they put those in some kind of a basket, and want to put that basket in the cask.

MR. CUMMINGS: Right.

MEMBER SKILLMAN: I would envision using some method like 7248 as a means to determine the acceptability of doing that.

MR. CUMMINGS: Well, that is one of the things that we are looking at. Right now, you can't do that under 7248 because the fuel definitions, what is an intact fuel assembly, what is a damaged fuel assembly, what is fuel debris, and whether it needs to go into a damaged fuel container, is something that is currently in the certificate. So, you would not be able to make changes to that under 7248.

For instance, there was recently a system that it did not allow damaged fuel. It only allowed intact fuel. They, then, had an event during vacuum drying where the rod -- and we will see this sometimes, not very often, but sometimes where you pop a rod; the rod loses its integrity. And they could not demonstrate that that was a

1 hairline or pinhole leak because they had had other
2 assemblies -- I think they had one or two other
3 assemblies that had done that or had leaked in the
4 core and the loss of material was more than a
5 pinhole leak or a hairline crack. So, they
6 couldn't make a case that it was still a intact
7 fuel assembly.
8 So now, that cask was already loaded,
9 had already been put out on the pad. There was no
10 avenue to go in and assess that because that cask
11 only allowed intact fuel.
12 In the context of the RIRP and CoC
13 content, that is one of the areas that I would like
14 to look at, is those fuel definitions, and do they
15 belong in the FSAR and allow somebody to go in and
16 make an assessment of their fuel, and that it can
17 be put safely, even if you have something bigger
18 than a pinhole leak or hairline crack, as long as
19 you can still demonstrate that the fuel pellets
20 won't redistribute within the system.
21 MEMBER SKILLMAN: Okay. Thank you.
22 CHAIRMAN BALLINGER: If this canister
23 was already out on the pad, how did they detect
24 that it was leaking, that the fuel was leaking?
25 MR. CUMMINGS: During the vacuum drying

1 system.

2 CHAIRMAN BALLINGER: Okay. So, they

3 continued on and, then, put it out on the pad?

4 MR. CUMMINGS: It was during the drying

5 evolution.

6 CHAIRMAN BALLINGER: Okay.

7 MR. CUMMINGS: Right.

8 MEMBER STETKAR: Kris, before you go to

9 the next one, I will ask you the same thing that I

10 asked the staff. The industry also has formed a

11 Risk-Informed Steering Committee that interacts

12 regularly with the NRC's Risk-Informed Steering

13 Committee. If this is a substantial burden to the

14 industry, has it been brought to the attention of

15 your Risk-Informed Steering Committee, so that it

16 can be put on the agenda for those discussions?

17 MR. CUMMINGS: I don't know the answer

18 to that. I will take that back and bring it to the

19 attention of our Risk-Informed --

20 MEMBER STETKAR: No, seriously,

21 everybody keeps talking about risk and safety and

22 risk and safety --

23 MR. CUMMINGS: Right.

24 MEMBER STETKAR: -- and we ought to

25 tailor these things according, you know, to be

1 commensurate with their risk. And both the
2 industry and the agency have these Risk-Informed
3 Steering Committees that are supposed to be
4 providing guidance for how to use risk in the
5 regulatory process.
6 MR. CUMMINGS: Right.
7 MEMBER STETKAR: And yet, I hear no
8 discussion of that from either side here.
9 MR. CUMMINGS: Here is where I would
10 provide some caution, which is when we start
11 talking about risk-informing. It sometimes very
12 easily goes to, well, we need to do more PRA. And
13 we certainly don't want to start imposing like a
14 seismic or fire protection type of PRA effort on
15 dry cask storage because, as I mentioned earlier, I
16 think we have done sufficient numbers of PRAs to
17 say we know that this is a low-risk activity; we
18 don't need more PRAs to continue to demonstrate
19 that. And so, that is, I think, the only caution I
20 would provide.
21 Now we have had significant discussions
22 with Mark Lombard and his staff about risk-
23 informing without needing to say we need more PRA
24 to appropriately risk-inform.
25 MEMBER STETKAR: Well, okay, I don't

1 want to get into too much of a discussion. But, to
2 use risk information, you need to have some sense
3 of what the risk might be.
4 MR. CUMMINGS: Agree.
5 MEMBER STETKAR: You don't necessarily
6 need 15 significant figures with a very large
7 negative exponent, but you need to have some basic
8 understanding --
9 MR. CUMMINGS: Agree.
10 MEMBER STETKAR: -- of what the risk
11 is.
12 MR. CUMMINGS: Right.
13 MEMBER STETKAR: So, you can't just do
14 simply qualitative hand-waving arguments.
15 MR. CUMMINGS: Understood.
16 MEMBER STETKAR: Anyway, I was just
17 curious what the industry side was doing. Thanks.
18 MR. CUMMINGS: All right. So, in terms
19 of specific things in the certificate that we are
20 looking for simplification, we think the LCOs,
21 Limiting Conditions of Operation, are generally in
22 good shape. The other areas that are ripe for
23 simplification, there are CoC requirements that are
24 really more the domain of the QA program, such as
25 the neutron absorber fabrication. Some of that is

1 actually in the certificates.

2 Fuel specifications, that is the

3 approved content section. They go well beyond what

4 is required in 72.236(a).

5 Dose rate limits had no safety benefit

6 beyond those already provided by existing

7 regulation. We have heard that they are in there

8 because they could be an indicator of a misload.

9 They are not necessarily a reliable indicator of a

10 misloaded fuel assembly, and plants control their

11 dry cask storage dose via the radiation protection,

12 like any other activity.

13 Essentially, you load the cask. You

14 take it out of the pool. You do dose measurements

15 and radiation protection on a continual basis. You

16 move it out to the ISFSI. You put it in the

17 storage cask. You do additional dose rate

18 measurements. The dose rate limits in the CoC are

19 well above that. You know, they may be between 40

20 and 100 millirem per hour on the surface. That is

21 the acceptance criteria. However, when you go out

22 and measure it, it is in the 1-to-2-millirem, if

23 you can measure it.

24 And then, there are other requirements

25 in the certificate that are simply a reiteration of

1 the regulations. We don't need to reiterate the
2 regulations in the certificates.
3 Those are just some examples of what we
4 are looking at in terms of the simplification, but
5 the big one being the approved contents and how can
6 we simplify that. I go back to, again, my history
7 with Holtec, and there were redundant
8 specifications for decay heat with cooling time
9 and, then, also, burnup with cooling time, for
10 different reasons, but they were redundant. You
11 can create a correlation between burnup and cooling
12 time with decay heat, and the NRC can review how
13 licensees show compliance with that on an
14 inspection basis.
15 So, some additional concepts for
16 consideration, let me get back to kind of the aging
17 management programs and the MAPS Report. The
18 discussions that we have started to have with the
19 NRC in terms of a learning aging management program
20 and making these programs flexible is being able to
21 credit inspections at similar sites or environments
22 for satisfaction of the AMPs.
23 EPRI has done a susceptibility
24 assessment criteria document where they look at the
25 susceptibility of different environments and casks

1 to chloride-induced stress corrosion cracking. And
2 one of the things that we have been looking to
3 advocate for is, well, if one site has no chlorides
4 in their environment, they are not a marine site,
5 they are in the middle of the country, they don't
6 have any evidence of CISCC at their plant, their
7 piping, one, why would they need -- or can they use
8 inspections from other places that are more
9 susceptible, with the understanding that they would
10 need to demonstrate that that site does have a more
11 aggressive environment to them?
12 Another issue is time-based stamps.
13 Looking at the MAPS Report, there are some clear
14 things, like creep, that are only significant at
15 the higher temperatures, whether it was above 200
16 degrees C or 300 degrees C. As we go in time, the
17 temperature reduces. So, could we sunset some of
18 those AMPs, because now you don't have that high-
19 temperature creep environment?
20 Applicability of AMPs on a site-
21 specific basis. This goes back to, again, the
22 CISCC. If you don't have an environment that
23 creates a CISCC, then why would you need to have an
24 AMP for that? What is currently envisioned in the
25 MAPS and in NUREG-1927 is every site is going to

1 need to do at least one inspection on their
2 canister to look for evidence or precursors of
3 chloride-induced stress corrosion cracking.
4 And the last one would be for ability
5 for users to account for as-loaded conditions for
6 AMP applicability. So, the cask is licensed to a
7 certain heat load. It has got a design basis, but,
8 invariably, we don't load right to that limit. If
9 you have got 40 kilowatts as your licensed maximum
10 heat load, you can really only practically load to
11 about 30 to 32 kilowatts, whether it is selection
12 of individual fuel assemblies, and then, you have
13 got a lot of conservatism in the licensing basis
14 calculations themselves.
15 So, would there be a way for licensees
16 to go and say, well, I loaded my specific casks
17 this way. You know, I have got 2 kilowatts. I
18 don't have enough heat to cause thermal creep. So,
19 do we need an AMP for that?
20 And so, that, obviously, requires some
21 coordination between the certificate-holder and
22 what they propose to the NRC as part of their
23 license renewal application, and whether there is
24 that flexibility. There is a possibility that, in
25 the same way that a licensee addresses that a cask

1 meets the requirements of their site under the
2 72.212 report, they could potentially address
3 whether AMPs are applicable or not applicable to
4 their individual site in a similar manner.
5 So, those are just some of the things
6 that we have been considering within the industry
7 to make an efficient aging management
8 program/regulatory process for extended storage and
9 longer license times.
10 CHAIRMAN BALLINGER: I have a comment.
11 With respect to the as-loaded conditions issue,
12 that could feed back onto some of the others as
13 well, right, because, in effect --
14 MR. CUMMINGS: It could.
15 CHAIRMAN BALLINGER: -- a licensee
16 could selectively load storage casks in order to
17 keep the temperature low, so that they didn't have
18 to deal with creep --
19 MR. CUMMINGS: Right.
20 CHAIRMAN BALLINGER: -- or some of
21 these other issues.
22 MR. CUMMINGS: Right.
23 CHAIRMAN BALLINGER: So, there is a
24 feedback effect or potential of feedback effect.
25 Well, maybe not feedback, but you know what I am

1 talking about.

2 MR. CUMMINGS: Yes, yes, yes. Yes, the

3 other thing is that, you know, that may also cause

4 some other AMPs to come in. So, chlorides may

5 Delaquess more readily at a lower temperature with

6 a lower loaded cask. And those are things that

7 were looked at in the susceptibility assessment.

8 So, it goes both ways. I mean, it is

9 not just a one-way sort of thing. But allowing

10 licensees to make a determination of how the

11 certificate AMPs are applicable to their sites or

12 the as-loaded conditions are applicable, those are

13 the sorts of things that we are starting to think

14 about and try to approach the regulator on how we

15 can put that into the license renewal process.

16 MR. LOMBARD: And that makes good sense

17 in the short-term, but eventually you have to load

18 that other fuel, that hotter fuel. Kewaunee is

19 looking at more of a regionalized, more level

20 loading pattern for their decommissioning activity.

21 So, you can do that for the short-term again, but,

22 yes, pay me now or pay me later; you have to load

23 that newer fuel sooner or later.

24 MR. CUMMINGS: Right.

25 MR. LOMBARD: But, certainly, our AMPs

are sensitive to that and they are learning and adaptive as well.

MR. CUMMINGS: All right. So, in summary, we are really looking for an efficient dry storage licensing process, and that is essential. I mean, as I mentioned, we have got 2500 casks. We fully expect that to increase. You know, as of today, we don't have an alternative place to send the casks, although we would like one and we continue to ask DOE to develop a place to send our casks. I think certain communities we have heard from, they would like to also have a place to send this, the spent fuel.

And we have seen progress in several areas. Certainly, NEI 1403 and the combination with NUREG-1927, Revision 1, I will reiterate what Mark said, which was that that was, I think, a very successful collaboration between industry and NRC to develop a framework that I think works well within the context of the current regulatory environment.

The NRC MAPS Report itself, I think it helps solve the issue that we had with some of the earlier license renewal applications. So, I go back to Calvert Cliffs. There were four rounds of

1 RAIs. There as a lot of, I think, uncertainty as
2 to what was important or disagreement on what
3 wasn't important versus was important.
4 The MAPS Report provides, I think, a
5 very good tool for licensees and CoC-holders to
6 use, especially in the context of where certain
7 things are not important. I think MIC,
8 microbially-induced corrosion, in a lot of cases
9 was determined not to be needing an aging
10 management program because it is not credible for
11 60 years.
12 But we are just starting the RIRP pilot
13 on the CoC content. So, we are looking forward to
14 additional interaction with the NRC on that.
15 But, going back to I think where Dana
16 started early on, which is we do look at wanting to
17 make bigger regulatory reforms in the context of
18 the regulations Part 72. We have heard from Mark
19 before, also, you know, that those sorts of issues
20 do get a low priority because of the prioritization
21 within the NRC. Raising that to the Commission, I
22 could see that being a favorable path to, I guess,
23 kick that sort of an effort, get it going.
24 So, I am happy to answer any other
25 questions.

1 CHAIRMAN BALLINGER: Questions from
2 members?
3 (No response.)
4 My fitness report is screwed.
5 Questions from members?
6 (No response.)
7 In the meantime, can we have anybody in
8 the audience that would like to make a comment? Is
9 the line open?
10 MR. LOMBARD: A quick comment from the
11 NRC?
12 CHAIRMAN BALLINGER: Yes.
13 MR. LOMBARD: I guess I didn't think
14 earlier when I talked about rulemaking, if it is a
15 Commission-directed rulemaking, then it can get
16 higher priority. So, that might be an option, too.
17 Then, we just have to find the resources to do it.
18 (Laughter.)
19 CHAIRMAN BALLINGER: Can somebody tap
20 the phone or do something, if you are out there, to
21 let us know that you exist?
22 (Laughter.)
23 MS. GILMORE: Hello.
24 CHAIRMAN BALLINGER: Hello.
25 MS. GILMORE: Oh, hi. It is Donna

1 Gilmore. I have a comment.

2 CHAIRMAN BALLINGER: Very well. Thank

3 you. Make your comment, please.

4 MS. GILMORE: Okay. Okay. Can you

5 hear me okay?

6 CHAIRMAN BALLINGER: Yes.

7 MS. GILMORE: Okay, great.

8 Some issues I don't see covered in the

9 document. We have the example of the Koeberg

10 nuclear plant that had a tank with a through-wall

11 crack deeper than the thickness of our canisters.

12 And that occurred in only 17 years. At San Onofre

13 we have had canisters loaded since 2003. So, this

14 is a real concern.

15 In Japan, a couple of years ago, they

16 no longer approve aluminum baskets because they

17 found --

18 CHAIRMAN BALLINGER: Oops. That wasn't

19 us.

20 MEMBER STETKAR: Ma'am, you just got

21 cut off. We need to, if you can hear us --

22 MS. GILMORE: Are you still there?

23 MEMBER STETKAR: Yes, you are back.

24 CHAIRMAN BALLINGER: You are back.

25 MS. GILMORE: Still there? Okay.

1 MEMBER STETKAR: Where you were cut off
2 is you were talking about Japan, just for
3 reference.
4 MS. GILMORE: Okay. In Japan, they
5 have banned the use of aluminum alloy baskets. In
6 fact, with the Fukushima canisters they determined
7 they were not going to hold up 60 years.
8 And then, a big hole in this document
9 is there is no example of what a mediation plan
10 would be. For example, with decommissioned plants,
11 they are allowed to destroy the spent fuel pool.
12 And currently, that is the only approved method to
13 replace a canister. So, I would like to see
14 something more specific covered, so that we have
15 some idea exactly what can happen if they need to
16 replace the canister.
17 And we are looking at like four years
18 here. If we go to 2003 for San Onofre's canister
19 loading, we go to the Koeberg situation of 17
20 years, you are only talking about four more years
21 where we could have a Koeberg type of a situation.
22 Fortunately, they didn't have spent fuel in their
23 tank. So, I see a real-live problem here that is
24 not being addressed by what has been covered here.
25 And regarding the consequences, those

PRAs that NEI was discussing earlier, they have a lot of exceptions. So, they don't really apply to this situation. I have studied those in detail.

So, anyway, it would be very important to the communities to know exactly how you are going to deal with the situation, and it is not covered anywhere.

Thank you.

CHAIRMAN BALLINGER: Thank you.

Are there any other people out there?

MR. LEWIS: My name is Marvin Lewis, member of the public. Hi. How are you doing?

CHAIRMAN BALLINGER: Very good, thank you.

MR. LEWIS: I have a small comment, yes.

Look, Mark Leyse, spelled L-E-Y-S-E, has just -- I'm sorry. I couldn't hear that one.

CHAIRMAN BALLINGER: You sort of broke up a little bit.

MEMBER STETKAR: It didn't come from us, Marvin. It was somebody else out there on the line. So, keep going.

MR. LEWIS: Wonderful. Okay.

An engineer named Mark Leyse,

1 L-E-Y-S-E, has sent a letter recently, within the
2 last few days, to Chairman Burns and the ACRS, and
3 all that. Although his point was about operating
4 nukes, not about spent fuel casks, it does raise an
5 issue; namely, that nitrogen and hydrogen, and
6 whatever, do under radiolysis and high temperature,
7 and all that, produce some effects on these
8 materials, whether it be the cladding or the
9 basket, or whoever, that whatever, that may or may
10 not have been looked at in the FSAR and all of the
11 other studies that have gone before EPRI and all
12 the others that have looked into these things.
13 And since recently 10 CFR 50.46(c),
14 Charlie, has been rewritten partially because of
15 his 2.206 petitions, this does raise the question,
16 how much of -- in other words, they are not using
17 materials in a lot of our testing to develop
18 numbers that have been exposed to several years of
19 nuclear power plant reactor pressure vessel
20 environment. So now, we are having them in baskets
21 and we are comparing them to materials that have
22 been tested without this exposure, reactor pressure
23 vessel exposure.
24 And I am just wondering if we are
25 wandering into an area where we are going to see

1 some really fun reactions that we aren't prepared
2 for. Just a comment, and thank you very much for
3 allowing me to do so. Bye.
4 CHAIRMAN BALLINGER: Thank you.
5 Is there anybody else out there that
6 would like to make a comment?
7 MR. HOFFMAN: This is Ace Hoffman.
8 CHAIRMAN BALLINGER: Yes, sir?
9 MR. HOFFMAN: I would like to make a
10 couple of quick comments.
11 First of all, at the CEP meeting for
12 the San Onofre plant recently, Tom Palmisano
13 referred to four different problems with extended
14 storage of dry casks. And the No. 1 problem was a
15 criticality event and the possibility of that. And
16 I don't really see that being covered in the
17 document that accompanies this meeting, the MAPS
18 document; in particular, in the case of an airplane
19 strike or a terrorist attack that will deform the
20 shape of the fuel.
21 And secondly, I don't see it covered in
22 terms of using excited photons to neutralize the
23 fissile materials, as proposed by Peter Livingston
24 and in documents that I have created and published
25 on the web. Is there anyone at the NRC or NEI who

1 has looked into this possibility?

2 And another issue that I wanted to

3 discuss is the appendices that was discussed

4 earlier, the so-called "dog work". And I think you

5 will be in the doghouse if you don't include these

6 things, for the simple reason that, when a document

7 changes, whether it is an ASME document or

8 whatever, that change needs to be propagated up the

9 line. So, simply having a reference to the

10 document and saying, "This is what it says" is no

11 longer going to be true. And its effect on your

12 documents may no longer be true. So, the document

13 that is the cause of your statements should be

14 included in the report.

15 And that is basically all I have for

16 today. Thank you.

17 CHAIRMAN BALLINGER: Thank you. Thank

18 you.

19 Anybody else out there that would like

20 to make a comment?

21 (No response.)

22 Hearing none, thank you very much.

23 MS. GILMORE: Hold on. Hold on. This

24 is Donna. I left out one thing.

25 CHAIRMAN BALLINGER: Okay.

1 MS. GILMORE: There seems to be some
2 disagreement on the facts regarding the San Onofre
3 environment. I wanted to clear that up. The data
4 that was used to determine how much moisture or
5 humidity there is at San Onofre was not really done
6 at San Onofre. It was done at some other location.
7 And San Onofre has regular onshore
8 winds, surf, and morning and evening fog on a
9 regular basis. And the assumption was made in the
10 analysis on San Onofre that it doesn't have that.
11 I think that is a critical piece of information.
12 Thank you.
13 CHAIRMAN BALLINGER: Thanks again.
14 Again, anybody else out there that
15 would like to make a comment?
16 (No response.)
17 Hearing none, thank you very much.
18 Can we get the line closed? Yes, done.
19 Okay. As is our custom, can we go
20 around the table and ask for any other comments and
21 suggestions? I remind you that their path forward
22 indicates that they are going to send this out for
23 public comment, have a meeting or so, and then,
24 come back to us next spring with the final
25 guidance.

1 That is your intention? Yes?

2 MR. WISE: Yes.

3 MEMBER REMPE: Are there going to be

4 any minor corrections before it goes out for public

5 comment?

6 MR. WISE: We have had these little

7 minor things. We envision doing a few of those, if

8 you wouldn't object to us doing those before it

9 goes out for public comment. Because, again, every

10 time we read this, there are little things, like we

11 wish we would have used this reference instead of

12 this reference or, like you mentioned, maybe there

13 is a corrosion rate that we should have referenced.

14 There are little things that we have already kind

15 of tabbed as things we would like to clean up a

16 little bit, but they are not things that affect the

17 conclusions. It is just tying loose ends, so it is

18 just a little bit tighter.

19 CHAIRMAN BALLINGER: Yes, yes.

20 Certainly, the units issue.

21 MR. WISE: Yes, yes.

22 MEMBER REMPE: I think that would be

23 good. That is why I asked. Thank you.

24 MR. WISE: Yes. Okay, thanks. Yes, so

25 we will be looking at it.

1 CHAIRMAN BALLINGER: We can't start
2 with Joy because she is conflicted.
3 MR. LOMBARD: But we would certainly
4 accept her comments.
5 CHAIRMAN BALLINGER: Okay.
6 MEMBER REMPE: I don't have any great
7 insights, but I think there are a couple of places,
8 as I mentioned during the meeting, that if you are
9 doing some minor corrections, I think that would be
10 good.
11 And I appreciate your presentation and
12 hearing about your progress.
13 CHAIRMAN BALLINGER: Jose?
14 MEMBER MARCH-LEUBA: Yes, I don't have
15 any substantial comments. I think the report was
16 very good. It was a good read and very informative
17 for me. So, thank you very much.
18 CHAIRMAN BALLINGER: Mr. Stetkar?
19 MEMBER STETKAR: Nothing more. Thank
20 you.
21 CHAIRMAN BALLINGER: Dennis?
22 (No response.)
23 Hearing nothing, Matt?
24 MEMBER SUNSERI: No comments. Thank
25 you.

1 CHAIRMAN BALLINGER: Dr. Powers?

2 MEMBER POWERS: Well, I certainly have
3 no objections to the document going out for public
4 comment. I think the ACRS itself has a couple of
5 tasks that it needs to consider.

6 One is, do we have a regulatory process
7 here that is discordant with other things we are
8 doing within the regulatory field where it may have
9 a better template for this activity, especially
10 since this one depends so much on learning during
11 the course of surveillance of these casks?

12 The other task is one I am a little
13 unsure about. That is how we introduce
14 quantitative risk assessment into the regulatory
15 processes with these risk-steering committees. And
16 I think we need to follow up a little bit on that.

17 Those are our activities, not yours. I
18 think going out for public comment, you have got to
19 that because I think it helps your document. There
20 are so many things here that you just don't think
21 about. I mean, you can be the best people in the
22 world; there is, undoubtedly, something out there
23 you didn't think about.

24 CHAIRMAN BALLINGER: Dick?

25 MEMBER SKILLMAN: I commend the staff,

1 and particularly those who were instrumental in
2 producing the MAPS Report. I think it is very
3 comprehensive, very detailed. From where we
4 started to what it is right now is a huge amount of
5 work.
6 I would acknowledge that using it will
7 be tedious because it does identify each and every
8 piece and part and what the failure mechanisms can
9 be. There is a lot of judgment involved in that.
10 But it was no small undertaking to get this
11 document to where it is. So, I commend the staff
12 for that. I think the companion document, 1927,
13 Rev. 1, is equally punchy and effective.
14 And based on the comments that I heard
15 from the public, I think those are probably
16 addressed within the body of these two documents.
17 So, I thank you for your presentation.
18 CHAIRMAN BALLINGER: Margaret?
19 MEMBER CHU: No comments. I just want
20 to say it is a very good report, very good and
21 systematic and comprehensive technical work. Thank
22 you.
23 CHAIRMAN BALLINGER: Pete?
24 MEMBER RICCARDELLA: Yes, I have no
25 comments.

1 CHAIRMAN BALLINGER: Well, then, I
2 think, unless there are any other comments that we
3 are missing, thank you very much for the
4 presentation. I think we look forward, I do
5 anyway, to the presentation after public comment,
6 which we would probably, then, make a decision on
7 what to do vis-a-vis do nothing or do something, a
8 letter, or something like that.
9 So, absent any faux pas that I have
10 made that Dr. Stetkar will apprise me of right
11 away, we are adjourned.
12 (Whereupon, at 11:10 a.m., the meeting
13 in the above-entitled matter was adjourned.)
14
15
16

U.S.NRC
United States Nuclear Regulatory Commission
Protecting People and the Environment

Draft Managing Aging Processes in Storage (MAPS) Report

Darrell Dunn, Ricardo Torres, John Wise
NMSS/DSFM/RMB

Presentation to:
ACRS Subcommittee on Metallurgy and Reactor Fuels
September 20, 2016

NMSS
Division of Spent Fuel Management

Background

- NRC staff experience with the renewal of licenses and certificates of compliance for the storage of spent nuclear fuel revealed a need for expanded guidance
- NRC team assessed current regulatory framework to determine what changes were needed
  - NUREG-1927, Rev. 1 (Standard Review Plan for storage renewals) - issued June 2016
  - Managing Aging Processes in Storage (MAPS) Report
  - Guidance for NRC oversight of licensees' aging management activities
  - Regulatory Guide on the use of NRC and industry guidance for renewal applications

Infrastructure for Updated Storage Renewal Framework

U.S.NRC
United States Nuclear Regulatory Commission
Protecting People and the Environment

TI / IP Inspections

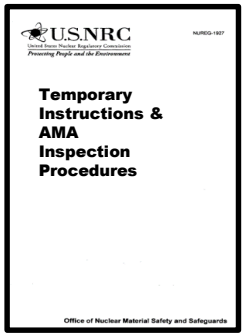

SRP 1927R1

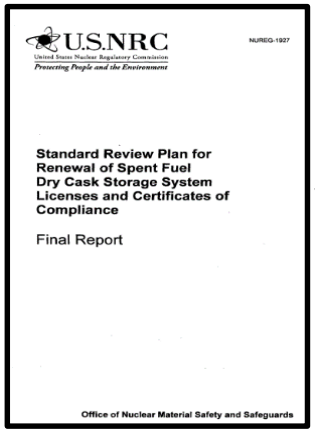

Staff consideration of Stakeholder inputs

MAPS

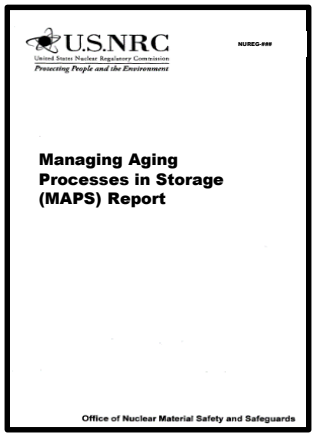

RG

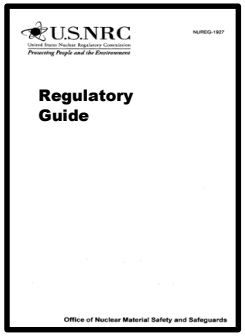

Technical Issue Resolution

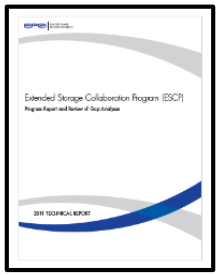

Consensus Codes

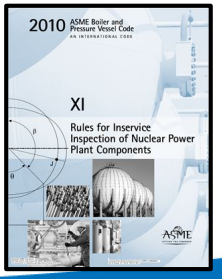

Storage/ Reactor OpE

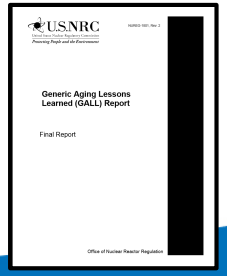

SRP NUREG-1927R0

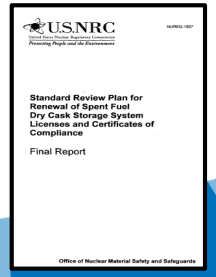

NEI 14-03

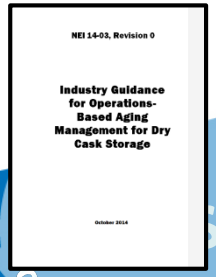

DOE/ANL Report

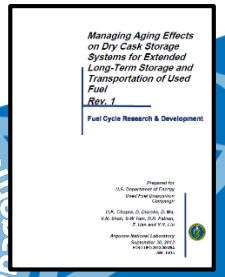

Storage Renewal Projections

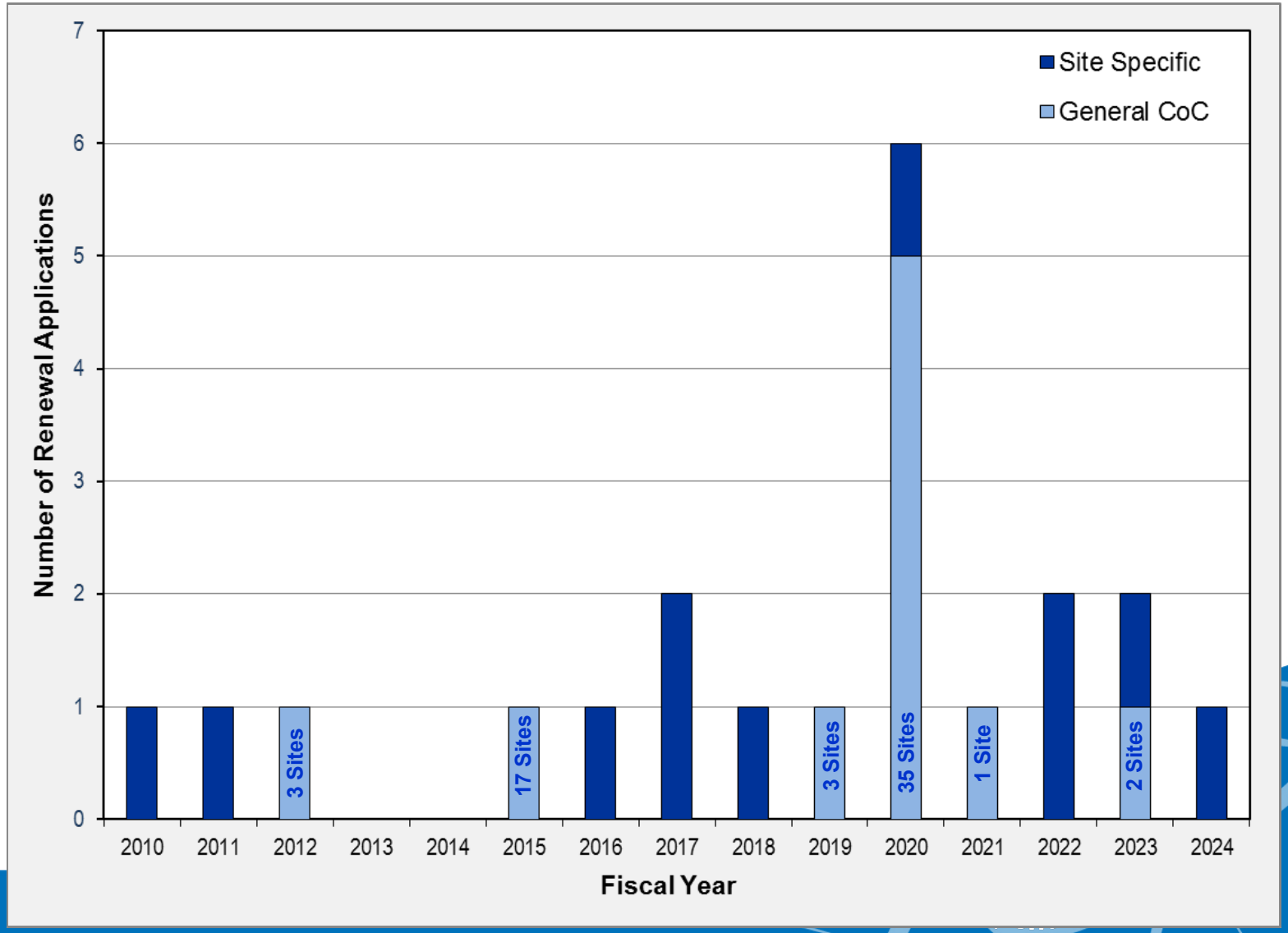

MAPS Report – What it will provide

U.S.NRC
United States Nuclear Regulatory Commission
Protecting People and the Environment

- Clarity of NRC staff technical position
  - Identification of the credible aging mechanisms and appropriate aging management activities
  - Applicants must still show that the generic guidance is applicable to their specific sites and CoCs

- Efficiency in the preparation and review of renewal applications
  - Reference to the MAPS guidance in renewal applications will allow the staff to focus its review on those areas where applicants propose an alternative approach

NMSS
Division of Spent Fuel Management

Content

1. Introduction	Introduction & purpose
2. Definitions	Descriptions of terms used
3. Technical Basis	Technical basis for credibility of aging mechanisms
4. System Descriptions	Description and drawings of select storage systems
Aging Management Tables	Identification of subcomponents, materials, environments, aging effects, and the recommended aging management activity
5. Aging Management Programs	Example aging management programs

Chapter 3
Technical Basis

U.S.NRC
United States Nuclear Regulatory Commission
Protecting People and the Environment

- Supported by the Office of Nuclear Regulatory Research and the Center for Nuclear Waste Regulatory Analyses at Southwest Research Institute
  - Providing the technical basis for regulatory guidance with respect to degradation mechanisms over extended timeframes
- Systematic evaluation of potential aging mechanisms to identify those “credible” mechanisms that may impact an important-to-safety function (if not addressed by an aging management activity)
- Basis for the aging management review results in Chapter 4

NMSS
Division of Spent Fuel Management

Chapter 4
Evaluated Storage Systems

U.S.NRC
United States Nuclear Regulatory Commission
Protecting People and the Environment

- MAPS addresses a variety of designs and near-term renewal applications
  - Standardized NUHOMS (horizontal welded canister)
  - HI-STORM 100 (vertical welded canister: concrete overpack)
  - HI-STAR 100 (vertical welded canister: metal overpack)
  - TN-32, 68 (vertical metal bolted cask)
- Lessons can be extended to other systems
- Future revision of MAPS will incorporate additional designs

NMSS
Division of Spent Fuel Management

Chapter 4
Aging Management Tables

U.S.NRC
United States Nuclear Regulatory Commission
Protecting People and the Environment

Aging management review results for all components in the selected storage systems

Example: HI-STORM 100 overpack outer shell

Structure, System, or Component	Intended Safety Function	Material	Environment	Aging Mechanism	Aging Effect	Aging Management
Outer shell	SR	Steel	Air - outdoor	General corrosion	Loss of material	External Surfaces Monitoring of Metallic Components AMP
				Pitting and crevice corrosion	Loss of material	External Surfaces Monitoring of Metallic Components AMP
				Microbiologically influenced corrosion	Loss of material	No
				Fatigue	Cracking	A TLAA or a supporting calculation may be needed

Chapter 5
Aging Management Programs

U.S.NRC
United States Nuclear Regulatory Commission
Protecting People and the Environment

- Localized Corrosion and Stress Corrosion Cracking of Welded Stainless Steel Dry Storage Canisters*
- Reinforced Concrete Structures*
- External Surfaces Monitoring of Metallic Components
- Ventilation Systems
- Bolted Cask Seal Leakage Monitoring
- Transfer Casks
- High Burnup Fuel Monitoring and Assessment*

[*largely consistent with NUREG-1927, Rev 1]

NMSS
Division of Spent Fuel Management

Example

HI-STORM 100

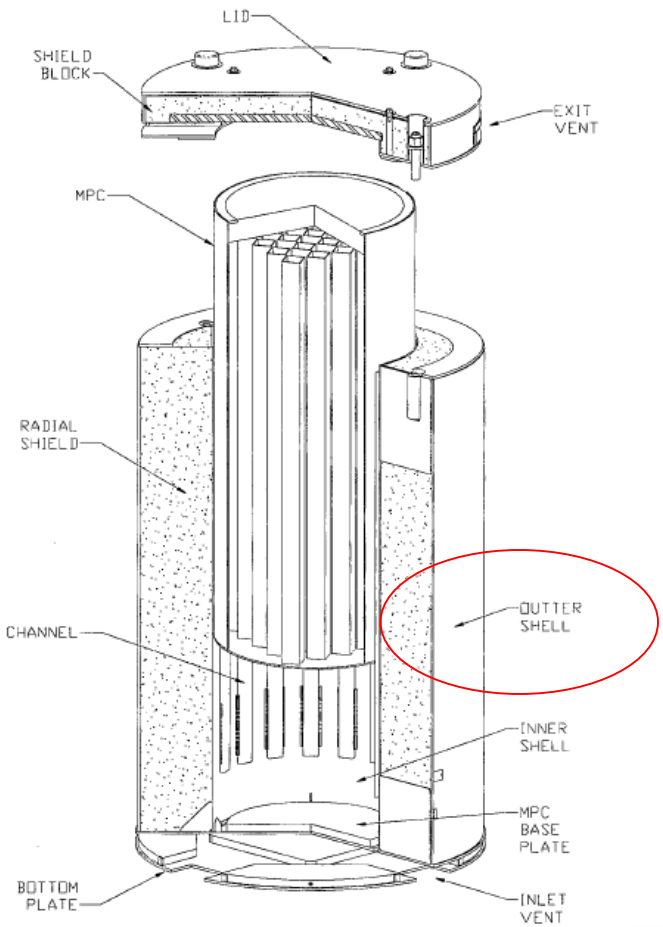

FSAR

Primary Function	Component (3)	Safety Class (4)	Codes/Standards (as applicable to component)	Material
Structural Integrity	Baseplate	B	ASME Section III; Subsection NF	SA516-70
Structural Integrity	Outer Shell	B	ASME Section III; Subsection NF	SA516-70
Structural Integrity	Inner Shell	B	ASME Section III;	SA516-70

MAPS aging management table

Structure, System, or Component	Intended Safety Function	Material	Environment	Aging Mechanism	Aging Effect	Aging Management
Outer shell	SR	Steel	Air - outdoor	General corrosion	Loss of material	External Surfaces Monitoring of Metallic Components AMP ✓
				Pitting and crevice corrosion	Loss of material	External Surfaces Monitoring of Metallic Components AMP ✓
				Microbiologically influenced corrosion	Loss of material	No
				Fatigue	Cracking	A TLAA or a

Example

HI-STORM 100

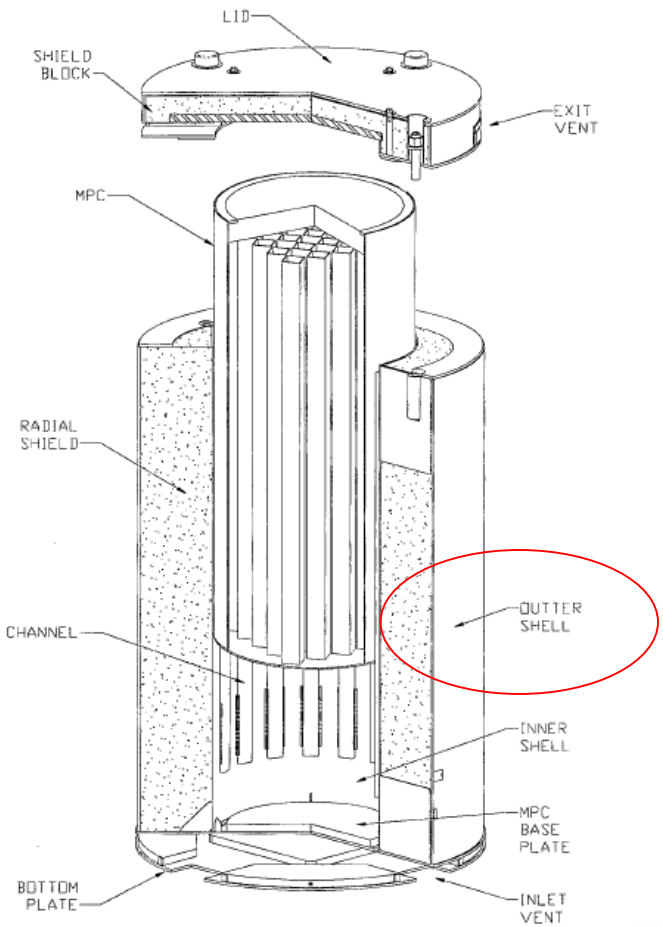

MAPS: External Surfaces Example AMP

- Inspection Method:
  - Visual inspections in accordance with ASME Code Section XI for VT-3
- Coverage:
  - All accessible external surfaces
- Sample Size:
  - All casks
- Frequency:
  - At least once every 5 years
- Acceptance Criteria
  - No detectable loss of material
  - No corrosion products
  - No coating defects

Path Forward

- Fall 2016: Issue draft guidance for public comment
- Spring 2017: Present final guidance to ACRS
- Summer 2017: Publish final guidance
- 2017: Prepare MAPS, Revision 1 to include additional storage system designs

References

- **NUREG-1927, Rev. 1**, Standard Review Plan for Renewal of Specific Licenses and Certificates of Compliance for Dry Storage of Spent Nuclear Fuel

  http://www.nrc.gov/reading-rm/doc-collections/nuregs/staff/sr1927/r1/

- **NUREG-1801, Rev. 2**, Generic Aging Lessons Learned (GALL) Report

  http://www.nrc.gov/reading-rm/doc-collections/nuregs/staff/sr1801/r2/

- **NEI 14-03, Rev. 1**, Format, Content and Implementation Guidance for Dry Cask Storage Operations-Based Aging Management

  ADAMS Accession No. ML15272A329

Abbreviations

- ACRS – Advisory Committee on Reactor Safeguards
- AMP – Aging Management Program
- ASME – American Society of Mechanical Engineers
- CoC – Certificate of Compliance
- DSFM – Division of Spent Fuel Management
- MAPS – Managing Aging Processes in Storage
- NEI – Nuclear Energy Institute
- NMSS – Office of Nuclear Material Safety and Safeguards
- RMB – Renewals and Materials Branch

Backup Slides

Interface with NEI 14-03

NEI 14-03: Format, Content, and Implementation Guidance for Dry Cask Storage Operations-Based Aging Management

- Provides a recommended *process* for addressing aging management
- Guidance for submitting renewal applications that are reasonable consistent in format and content
- Does not provide details of technical issues or specific aging management programs (AMPs)
- Focuses on licensing guidance – e.g., content of UFSAR, change control, AMP implementation, sharing of operating experience

AMP: Localized Corrosion and Stress Corrosion Cracking of Welded Stainless Steel Dry Storage Canisters

Inspection Scope: External surfaces of the welded stainless steel canister confinement boundary (focused on areas near welds, crevices, where deposits may accumulate, and relatively cold surfaces)

Detection of Aging Effects:

- Method: Visual examination for deposits and corrosion products (ASME Code Section XI VT-1, VT-3); Surface and volumetric methods to characterize extent and severity of localized corrosion and cracking
- Sample Size: One canister per site
- Frequency: Once every 5 years

Acceptance Criteria: No indications of corrosion pits, etching, crevice corrosion, SCC, red-orange colored products at crevices or welds

AMP: Reinforced Concrete Structures

Scope: Above-grade and below-grade concrete areas; groundwater chemistry; radiation (shielding effectiveness)

Detection of Aging Effects:

- Method: Visual examinations; Chemical analysis of groundwater; Radiation surveys
- Sample Size: Visual: 100% of all readily accessible surfaces / subset of normally inaccessible surfaces
- Frequency: Visual per ACI 349.3R (at least once every 5 years for above-grade / opportunistic for below-grade); chemistry and radiation survey as justified

Acceptance Criteria: Visual per ACI 349.3R (e.g., pop-outs/voids less than 20mm, cracks less than 0.4 mm width); Groundwater per ASME Code Section XI, IWL; radiation as justified

AMP: External Surfaces Monitoring of Metallic Components

Scope: External surfaces of metallic components (e.g., metallic overpack surfaces, canister support structures, heat shields)

Detection of Aging Effects:

- Method: Visual examination in accordance with ASME Code Section XI, VT-3
- Sample Size: All readily accessible surfaces of all casks and overpacks; extent of inaccessible surfaces sufficient to characterize their condition
- Frequency: Once every 5 years (readily accessible)

  Opportunistic (normally inaccessible – within overpacks)

Acceptance Criteria: No detectable loss of material, red-orange colored corrosion products, coating defects, loose or displaced parts

AMP: Ventilation Systems

Scope: Air inlet/outlet vents

Detection of Aging Effects:

- Method: Visual inspections for obstructions during periodic walkdowns; Temperature monitoring as an alternative to verifying thermal conditions
- Sample Size: All directly observable vent areas
- Frequency: Per the design basis (typically daily)

Acceptance Criteria: Allowable blockage and temperature, as justified

AMP: Bolted Cask Seal Leakage Monitoring

Scope: Confinement boundary seal

Detection of Aging Effects:

- Method: Pressure monitoring; Visual (VT-3) examination under the protective weather cover
- Sample Size: Pressure monitoring of all casks; visual inspections under the cover of one cask
- Frequency: Continuous monitoring of pressure; Visual inspections under the protective cover on an opportunistic basis – but at least once every 5 years

Acceptance Criteria: Pressure within the range allowed by the design basis; visual inspections find no indications of coating degradation, corrosion, loose/missing/displaced parts.

NMSS Division of Spent Fuel Management

AMP: Transfer Casks

Scope: Transfer cask subcomponents (including cask cavity)

Detection of Aging Effects:

- Method: Visual (VT-3) examination of accessible surfaces; Normally inaccessible surfaces (in contact with liquid neutron shield) assessed with ultrasonic techniques or inspections for leakage
- Sample Size: All transfer casks
- Frequency: At least once every 5 years, or prior to loading campaign

Acceptance Criteria: No detectable loss of material, red-orange colored corrosion products, or coating defects; no evidence of shield water leakage or loss of shield wall thickness beyond established limit

AMP: High-Burnup Fuel Monitoring and Assessment

Scope: Surrogate demonstration program

Acceptance Criteria:

- Maximum hydrogen content of cover gas less than the design-bases limit
- Moisture content less than the expected upper bound per the design-bases drying process
- No changes to the analyzed fuel configuration considered in the analysis of the approved design bases

Environment Abbreviations

Outdoor air	OD
Demineralized water	DW
Embedded in concrete	E-C
Embedded in metal	E-M
Embedded in neutron shielding	E-NS
Fully encased or lined	FE
Helium	HE
Groundwater/soil	GW
Sheltered	SH

NMSS Division of Spent Fuel Management

Steel Aging Mechanisms

Section	Aging Mechanism	Credible Environments	Noncredible Environments
3.2.1.1	General corrosion	OD, SH, DW, GW, E-C	E-M, E-NS, HE
3.2.1.2	Pitting and crevice corrosion	OD, SH, DW, GW, E-C	E-M, E-NS, HE
3.2.1.3	Galvanic corrosion	OD, SH	
3.2.1.4	Microbiologically influenced corrosion (MIC)	GW, E-C	OD, SH, DW, E-M, E-NS, HE
3.2.1.5	Stress corrosion cracking (SCC)		OD, SH
3.2.1.6	Creep		OD, SH, DW, GW, E-M, E-NS, HE
3.2.1.7	Fatigue	analyses required	
3.2.1.8	Thermal aging		OD, SH, DW, GW, E-M, E-NS, HE
3.2.1.9	Radiation embrittlement	analyses required	
3.2.1.10	Stress relaxation	SH	OD
3.2.1.11	Wear	OD	

Stainless Steel Aging Mechanisms

Section	Aging Mechanism	Credible Environments	Noncredible Environments
3.2.2.1	General corrosion		OD, SH, DW, E-M, E-NS, HE
3.2.2.2	Pitting and crevice corrosion	OD, SH	DW, E-M, E-NS, HE
3.2.2.3	Galvanic corrosion	OD, SH	
3.2.2.4	MIC		OD, SH, DW, E-M, E-NS, HE
3.2.2.5	SCC	OD, SH	DW, E-M, E-NS, HE
3.2.2.6	Creep		OD, SH, DW, E-M, E-NS, HE
3.2.2.7	Fatigue	analyses required	
3.2.2.8	Thermal aging		OD, SH, DW, E-M, E-NS, HE
3.2.2.9	Radiation embrittlement	analyses required	
3.2.2.10	Stress relaxation		OD, SH
3.2.2.11	Wear	OD	

Aluminum Aging Mechanisms

Section	Aging Mechanism	Credible Environments	Noncredible Environments
3.2.3.1	General corrosion		SH, E-M, E-NS, HE
3.2.3.2	Pitting and crevice corrosion	SH	E-M, E-NS, HE
3.2.3.3	Galvanic corrosion	SH	HE
3.2.3.4	MIC		SH, E-M, E-NS, HE
3.2.3.5	Creep	analyses required	
3.2.3.6	Fatigue	analyses required	
3.2.3.7	Thermal aging	analyses required	
3.2.3.8	Radiation embrittlement	analyses required	

Nickel, Copper Aging Mechanisms

Section	Aging Mechanism	Credible Environments	Noncredible Environments
	Nickel Alloys		
3.2.4.1	General corrosion		OD
3.2.4.2	Pitting and crevice corrosion		OD
3.2.4.3	MIC		OD
3.2.4.4	SCC		OD
3.2.4.5	Fatigue	analysis required	
3.2.4.6	Radiation embrittlement		OD
3.2.4.7	Stress relaxation		OD
	Copper Alloys		
3.2.5.1	General corrosion	OD	
3.2.5.2	Pitting and crevice corrosion		OD
3.2.5.3	MIC		OD
3.2.5.4	Radiation embrittlement		OD

Neutron Shielding Aging Mechanisms

Section	Aging Mechanism	Credible Environments	Noncredible Environments
3.3.1.1	Boron depletion	analyses required	
3.3.1.2	Thermal aging	FE	
3.3.1.3	Radiation embrittlement	FE	

Neutron Poison Aging Mechanisms

Section	Aging Mechanism	Credible Environments	Noncredible Environments
	Borated Stainless Steels		
3.4.1	General corrosion		HE
3.4.1	Galvanic corrosion		HE
3.4.1	Wet corrosion and blistering		HE
3.4.1.1	Boron depletion		HE
3.4.1.2	Creep		HE
3.4.1.3	Thermal aging		HE
3.4.1.4	Radiation embrittlement		HE
	Borated Aluminum and Aluminum-based Composites		
3.4.2.1	General corrosion		HE
3.4.2.2	Galvanic corrosion		HE
3.4.2.3	Wet corrosion and blistering		HE
3.4.2.4	Boron depletion		HE
3.4.2.5	Creep		HE
3.4.2.6	Thermal aging		HE
3.4.2.7	Radiation embrittlement		HE

Concrete Aging Mechanisms

Section	Aging Mechanism	Credible Environments	Noncredible Environments
3.5.1.1	Freeze and thaw	OD, GW (above freeze line)	SH, FE, GW (below freeze line)
3.5.1.2	Creep		all
3.5.1.3	Reaction with aggregates	all	
3.5.1.4	Differential settlement	OD, SH, GW	
3.5.1.5	Aggressive chemical attack	OD, GW	SH, FE
3.5.1.6	Corrosion of reinforcing steel	OD, GW	SH, FE
3.5.1.7	Shrinkage		OD, SH, GW, FE
3.5.1.8	Leaching of calcium hydroxide	OD, SH, GW	FE
3.5.1.9	Radiation damage	analysis required	
3.5.1.10	Fatigue	analysis required	
3.5.1.11	Dehydration at high temperature		OD, SH, GW, FE
3.5.1.12	Microbiological degradation	GW	OD, SH, FE
3.5.1.13	Delayed ettringite formation		OD, SH, GW, FE
3.5.1.14	Salt scaling	OD, GW (above freeze line)	SH, FE, GW (below freeze line)

Spent Fuel Assembly Aging Mechanisms

Section	Aging Mechanism	Credible Environments	Noncredible Environments
Cladding Materials			
3.6.1.1	Hydride reorientation and hydride-induced embrittlement		HE
3.6.1.2	Delayed hydride cracking		HE
3.6.1.3	Thermal creep	HE	
3.6.1.4	Low-temperature creep		HE
3.6.1.5	Mechanical overload		HE
3.6.1.6	Oxidation		HE
3.6.1.7	Pitting corrosion		HE
3.6.1.8	Galvanic corrosion		HE
3.6.1.9	SCC		HE
3.6.1.10	Radiation embrittlement		HE
3.6.1.11	Fatigue		HE
Assembly Hardware Materials			
3.6.2.1	Creep		HE
3.6.2.2	Hydriding		HE
3.6.2.3	General corrosion		HE
3.6.2.4	SCC		HE
3.6.2.5	Radiation embrittlement		HE
3.6.2.6	Fatigue		HE

Dry Storage Aging Management

Kristopher Cummings
Nuclear Energy Institute
ACRS Subcommittee on Metallurgy and Reactor Fuels
September 20th, 2016 • Rockville, MD

Uniqueness of Dry Cask Storage

- Dry Cask Systems are robust with no reliance on active systems.
- Risk from Dry Cask Storage is orders of magnitude lower than thresholds:
  - EPRI and NRC PRAs demonstrated that annual cancer risk between 1.8E-12 and 3.2E-14 compared to 2E-6 LCF/yr public & 1E-5 LCF/yr worker thresholds of negligible risk.
- Margins of safety increase with time:
  - Reduction in decay heat, radiological source term, reactivity and offsite dose with time.

Improving the Regulatory Framework – Why?

- Experience with and increasing use of dry storage demand a more efficient framework
  - Also consistent with NRC Project AIM
- Efficiencies can only be gained if the relatively low risk of dry storage is appropriately recognized
- Specific guidance and rule changes can be targeted:
  - Incorporation of the principles contained in PRM 72-7
  - Explicit recognition of aspects of defense-in-depth considerations

Improvements to the Regulatory Framework

- NEI 14-03, "Format, Content and Implementation Guidance for Dry Cask Storage Operations-Based Aging Management":
  - Consistent format and content of license renewal applications (LRAs)
  - Operations-based aging management through learning aging management programs
  - Sharing of operating experience related to aging management - AMID
  - Periodic "tollgate" safety assessments

Improvements to the Regulatory Framework

- RIRP I-16-01
  - The proposed RIRP will use a pilot CoC Amendment to clarify the safety-focused level of CoC/Tech Spec detail.

USED FUEL STORAGE AND TRANSPORTATION ISSUE SCREENING FORM
Issue Number: N-16-01

Title: Improving the efficiency of the regulatory framework for dry storage of spent nuclear fuel

I. a. Problem Statement (Provide a clear, concise description of the issue.)

Spent nuclear fuel storage cask Certificates of Compliance and ISFSI licenses contain an inordinately high level of detail that is not commensurate with the relatively low risk of dry cask storage operations. This results in industry and NRC resources being unnecessarily expended on review and approval of non-safety significant changes – and being diverted from more safety-significant matters.

b. Background Information (Summarize industry events, licensing actions, inspection information, correspondence, and other documents germane to the issue. Attach documents as appropriate)

Both NRC and industry recognize that there is a need to improve the efficiency of the licensing process for dry storage of spent nuclear fuel (SNF) under 10 CFR Part 72. Yet despite this mutual recognition, this process continues to consume an inordinate amount of both NRC and industry resources. The lack of a risk appropriate licensing process has caused dry storage licenses and CoCs to be considerably more detailed than reactor licenses, even though the risks associated with dry cask storage are considerably lower. A collaborative effort between NRC and industry is needed to provide a path forward to more risk appropriate dry storage licenses and CoCs. This need has long been recognized, yet progress towards a more efficient regulatory framework has proved elusive.

In February of 2010 the Commission directed staff (Reference 1) to "undertake a thorough review of the regulatory programs for spent fuel storage and transportation" and to, among other things, "identify risk-informed, performance-based enhancements that will bring increased predictability and efficiency to the regulatory process". Staff responded to this later that year (Reference 2) with a 7 year plan to "implement risk informed enhancements". However, little progress has been made on this plan.

Meanwhile, in 2012 Industry submitted a Petition for Rulemaking (PRM 72-7) proposing improvements to 10 CFR Part 72 "based on experience and risk insights" (Reference 3). Although NRC approved the PRM for consideration in rulemaking (Reference 4), no action has been taken to date.

Despite these efforts, today the licensing of dry storage systems under 10 CFR Part 72 remains a highly inefficient process that consumes a significant NRC and industry resources.

The efficiency improvements being addressed in this RIRP are vital to enabling NRC to fulfill its mission, as the use of dry cask storage continues to grow, and are consistent with agency policy. NRC's Project Aim 2020 (Reference 5) outlines a planning strategy and makes several recommendations in the spirit of "helping the

CoC Content

- CoC content is directly proportional to cost
  - CoC amendments
    - Preparation (CoC holder)
    - Review fees (CoC holder)
    - Implementation (Licensee)
  - Fuel selection package complexity
  - 72.212 Report complexity, revisions
    - Every applicable CoC requirement needs to be addressed in the site 72.212 Report

CoC Content

- Overall level of detail in CoCs not commensurate with low potential for DCS to affect public health and safety
  - Creates need for amendments that are not safety-significant
  - Restricts CoC holder and licensee ability to use 10 CFR 72.48 to make changes that should not require NRC approval
- There are opportunities to simplify CoC content without affecting safety of DCS
  - Allow NRC and Industry resources to focus on safety-significant matters

CoC Simplification

- LCOs are generally in good shape
- Other areas of the CoC are ripe for simplification
  - Many current CoC requirements are, more appropriately, the domain of the QA program, e.g., neutron absorber fabrication
  - Fuel specifications go well beyond 72.236(a)
  - Dose rate limits add no safety benefit beyond that already provided by existing regulation (e.g. 10 CFR Part 20)
    - Not a reliable indicator of a misloading
    - Plants control DCS dose via radiation protection program like any other activity
  - Some requirements simply state that other regulations must be followed, e.g. Part 20, 72.48, etc.

Additional Concepts for Consideration

- Credit for inspections at similar sites/environments for satisfaction of AMPs
  - For CISCC, low susceptibility sites can credit positive inspections at more susceptible sites
- Time based AMPs (i.e., creep)
- Applicability of AMPs on a site-specific basis
- Ability for users to account for as-loaded conditions for AMP applicability.

Summary

- Efficient dry storage licensing processes are essential for effective management of the growing and aging dry storage cask population.
- Success in achieving a more efficient framework has already shown progress in several focused areas:
  - More efficient and flexible license renewal process (NEI 14-03 and NUREG-1927, Revision 1)
  - NRC MAPS Report
  - Just starting the RIRP I-16-01 pilot
- Reform is needed to assure an effective and consistent regulatory approach.