Bird-Strike Mortality on the Everglades Section of the Levee-Midway Powerline

by Peter C. Frederick

Assistant Research Professor

Deng Jie

Graduate Assistant

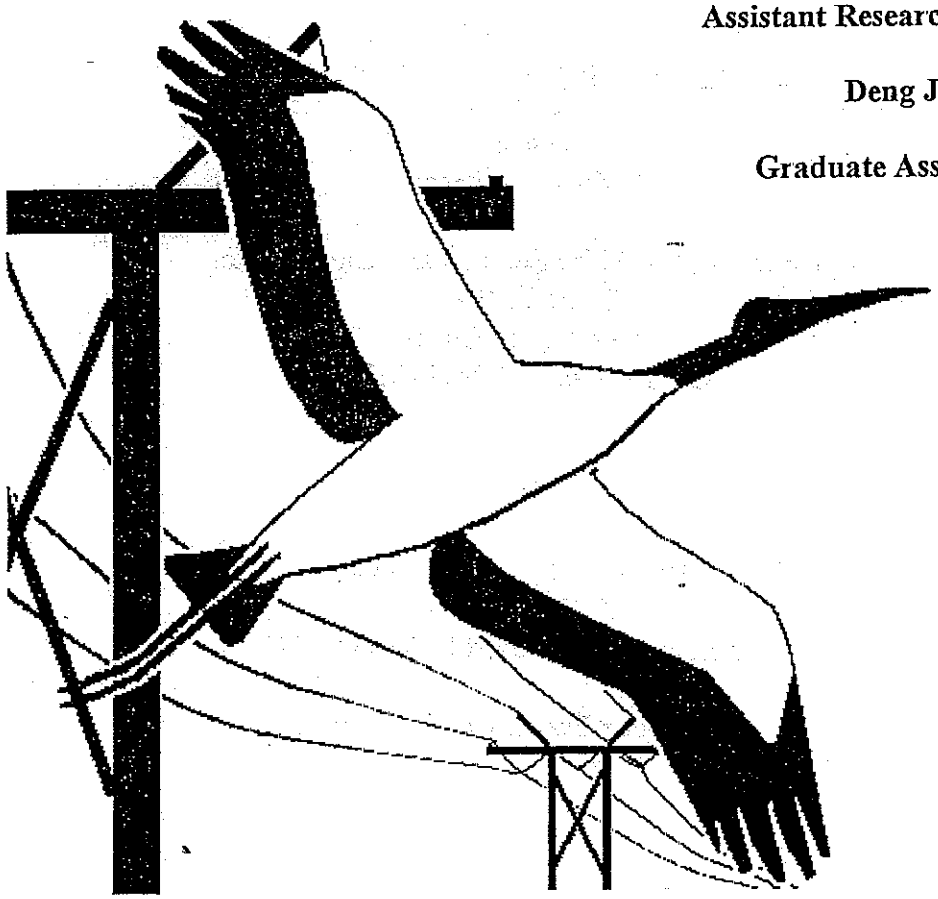

Florida Power and Light Co.

Bird-Strike Mortality on the Everglades Section of the Levee-Midway Powerline

Final Report
2 March 1997

by

Peter C. Frederick
Assistant Research Professor
and
Deng Jie
Graduate Assistant

Department of Wildlife Ecology and Conservation
P.O. Box 110430
University of Florida
Gainesville, Fl. 32611-0430

For

Florida Power and Light Co.
P.O. Box 088801
North Palm Beach, Florida 33408-8801

Ms. Florette Braun, Contract Officer

Executive Summary

The potential exists for collisions of birds with the ground wire of powerlines, especially for large-bodied birds in open, flat, aquatic landscapes. This is particularly true for wading birds in the Everglades, since many species may repeatedly cross powerlines in trips from roosts and colonies to foraging areas. In addition, some wading birds are known to travel to and from foraging grounds at night, a habit which may put them at risk of colliding with lines that are in their path. This project was initiated in order to study avian interactions with a newly-constructed power transmission line (Levee-Midway) in Water Conservation Area 2 in the Everglades. The goals are to monitor avian interactions, especially those leading to injury or mortality of endangered species such as Wood Storks (Mycteria americana) and Snail Kites (Rostrhamus sociabilis), to assess the effectiveness of a system of markers placed on the ground wires of the powerline to minimize collisions, and to document the chances of nocturnal mortality. This final report covers the results of both years of study, 1996 and 1997.

A portion of the powerline within WCA 2B (23 spans total) was marked on alternate spans with Swan Flight Diverters (SFD's) spaced every 25m apart on the two groundwires, giving an effective visual separation of 12.5 m when viewed horizontally. The diverters are white thick plastic tubing coiled concentrically about the ground wire, which increase the visual diameter of the wire to 30 cm. We observed avian interactions with marked and unmarked spans systematically for six hours each day (3 hours closest to sunrise and sunset) from 14 March 1996 - 4 July, 1996, and from12 January - 11 July 1997. Spans watched were chosen randomly, prior to observations. Sampling of each span was for a 1-hour period. All avian crossings of the powerline were recorded, with species, flock size, reactions, reaction distance, altitude, and weather taken for each observation. We hypothesized *a priori* that there would be differences in numbers of reactions to marked and unmarked sections of the powerline, though we did not predict the direction of the difference. Ground searches for carcasses were not possible because of thick vegetation, deep water, numerous scavengers, and a proven inability from previous studies to accurately count carcasses.

We also systematically observed flight behavior at a totally unmarked section of the same powerline approximately 13 km north of the marked/unmarked sections, at a place where large numbers of wading birds regularly crossed the powerline.

Combining years, we accumulated 1,831 span-hours of observation, during which we recorded 41,717 birds crossing the powerline in 15,964 flocks of 56 species (22.7 birds/span-hour). We witnessed two birds actually strike the powerline within the confines of WCA 2B, both wading birds, and neither was injured. Thus the death rate was zero, and the collision rate 0.0048% of birds. However, we also incidentally found 5 carcasses or injured birds underneath or immediately to the side of the powerline while driving the levees. Many of these injured birds could have struck during daylight hours because of the time and condition in which they were discovered, and we therefore suspect that our estimates of actual diurnal collision rates are somewhat low. Our estimate of striking rate is, however, in the same range as that of a similar study of an adjacent powerline in WCA 3. Both studies show that the measured rate of diurnal collisions is quite low.

Wading birds, Double-crested Cormorants (Phalacrocoras auritus), and Anhingas (Anhinga anhinga) were by far the most common species recorded crossing the powerline. Two strong flight corridors were noted crossing the powerline during both years, one in the North section as a flight line from the Alley North Colony in WCA 3A north, and the other from a mixed-species colony in the southeastern part of WCA 2B. The latter flight line accounted for over 34% of the total flights in WCA 2B in 1996. The distribution of crossings was therefore highly nonrandom in all sections.

We found effects of the SFD's on the flight behavior of birds when comparing marked and unmarked *spans* within the alternately marked and unmarked *section*. We found no differences in numbers of reactions or in flaring behavior using Chi-squared test comparisons of marked and unmarked *spans*. However, with a more powerful multivariate logistic regression analysis, we found a significant increase in flares in unmarked *spans*, and a significant increase in changes in altitude in marked spans. These results are consistent with the prediction that unmarked spans are more difficult for birds

to see, resulting in last-minute avoidance manoevers (flares) at unmarked spans, and more leisurely changes in altitude at marked spans.

We also compared reactions and flares between the totally unmarked northern *section*, and the alternately marked/unmarked *section*. We found significantly more flares and reactions in the alternately marked section using Chi-squared tests of the 1996 data. Using more powerful multivariate regression of the entire dataset, we found the same effects. This result seemed robust across species and statistical techniques, and indicates that there is a difference in the birds behavior in the different treatments. The increase in all types of avoidance behaviors at the alternately marked/unmarked sections may indicate that the marks are making the line as a whole more visible, since the effect carries over to the unmarked spans in this study section. It is possible that birds visually connect the marked and unmarked spans when viewing the alternately marked section from a distance, and treat the whole thing as marked. However, the unmarked section was not a true replicate of the alternately marked section, and the effect cannot be unambiguously attributable to the marking scheme.

Other factors had a statistically significant influence on the rate of reactions and flares, independent of marking treatment. We found significant increases of total reactions and of changes in altitude with increasing wind speed, and significant effects of wind direction relative to the flight path, on total reactions. We found conflicting patterns with cloud cover, with reactions decreasing, and flares increasing, with increasing cloud cover. The presence of rain and fog had surprisingly weak influence on any of the avoidance behaviors, though this may have been due to relatively few observations in rain or fog.

We documented the potential for nocturnal interactions by use of a night vision scope and surveillance radar. Together these two techniques offer the ability to count birds crossing the powerline (radar) and to document species and behavior when crossing. However, we found that even high quality night vision equipment did not allow direct observation of targets on the darkest nights and under poorest visibility conditions, which is when collisions might be most likely to occur.

During nighttime hours, we observed 1,010 targets, of which 364 crossed the powerline in 129 hours of observation (516 span-hours of radar, and 258 span-hours of visual observation, 0.70 flocks/span-hour, and 2.5 birds/span-hour). We made visual contact with 667 birds in 187 flocks. No collisions were observed. Eleven percent of the targets seen on radar disappeared at or close to the powerline, and visual observations of these "disappearing" birds indicated that they were either landing near the powerline, or decreasing altitude until they were no longer detectable by the radar. The low collision rate at night may be attributable in part to the fact that the birds are generally flying at altitudes above the groundwire - 80.8% of nocturnal flights were above the groundwire, which is 4.5 times a similar rate that we measured during daylight hours. If there are (as above) 2.5 birds crossing the powerline per span-hour, and only 20% of these are at or below the altitude of the structures and wires, then we feel justified in estimating that 0.5 birds/span-hour are probably at some risk of collision.

However, while the collision rate we documented was zero, this does not necessarily demonstrate that the powerline poses little risk to night-flying birds. It should be remembered that we were unable to see birds directly and clearly document the potential for collisions during the times when birds might be most likely to collide - under low light and poor visibility conditions.

The vast majority of nighttime flights were crepuscular - 61% occurred within one hour of sunset or sunrise, and 94% occurred before 24:00 and after 04:00. Thus avian traffic is highly concentrated during the better-lit times of night. Although the majority of these flights were clearly daytime-feeding birds traveling to and from roost sites in early morning and late evening, the majority (>80%) of flights by Black-crowned Night Herons and Wood Storks were towards foraging grounds in evening, and towards roosts during the morning. Thus these two species seem to be true nocturnal foragers.

These results apply only to the section of the Levee-Midway powerline studied, and to the conditions under which it was studied during 1996 and 1997, and are not necessarily applicable to other powerlines in other locations and situations.

Table of Contents

Executive Summary i

Table of Contents v

Acknowledgments vii

List of Figures viii

List of Tables ix

Introduction 1

Background: avian collisions with powerlines 1

Biological and demographic effects 1

Factors affecting collision rates 1

Effects of ground wires 3

Mitigation 3

Potential hazards posed to birds by the Levee-Midway Powerline 4

Purpose of this project 6

Methods 7

Study Site 7

Ground wire marking system 8

Diurnal behavioral observations 8

Searches for dead and injured birds 10

Statistical treatment of data 10

Nocturnal detection system 11

Results 13

Diurnal observations 13

Effects of the Swan Flight Diverters 14

Chi^2 analyses of 1996 data 15

Multivariate logistic regression analyses, - both years 16

Nocturnal observations 17

Discussion 20

Risk of diurnal collisions 20

Effects of the Swan Flight Diverters: marked vs. unmarked *spans* 21

Effects of the Swan Flight Diverters: alternately marked vs unmarked *sections* 22

Effects of altitude, weather, and wind on diurnal reactions 23

Nocturnal activity and risk of collisions 23

Literature Cited 25

Acknowledgements

We would like to thank many people, without whom our project would have been impossible. This project was initiated by Ross Wilcox, formerly of Florida Power and Light; Ross was quite generous in providing background materials and literature for the project. Arlene McGrane, Jeremy Bahr and Debbie Roberts served as technicians on this project, and they recorded a large part of the field observations. Special thanks go to Luo Qing, Jie's wife, who voluntarily helped this project both through field work and with data entry. We thank the staff of the South Florida Water Management District, who were much more than cooperative on the narrow, one-lane levees. We thank especially Frank Burnett of the University of Florida Department of Statistics for guidance with statistics, especially at the last minute. We thank Tim Williams and Sidney Gathreaux for their help in getting the radar to work. This work was funded by a contract from Florida Power and Light Company.

List of Figures

	Page
Figure 1. Map of the study area in South Florida	4
Figure 2. Classes of flight height and reaction distances	11
Figure 3. Schematic of the radar antenna deflector	12
Figure 4. Schematic of the radar corral fence	13
Figure 6. Numbers of birds passing individual spans of the South and Central Sections of the Levee-Midway powerline	15
Figure 7. Frequency distribution of nocturnal flights/hr	22
Figure 8. Seasonal changes in the nocturnal avian traffic in the vicinity of the Levee-Midway powerline.	22

List of Tables

	Page
Table 1. Catalogue of behavioral reactions of birds crossing the powerline.	10
Table 2. Numbers of waterbirds crossing the powerline, by section and species.	14
Table 2a. Characteristics of flocks of birds crossing the powerline during daylight hours in 1996 and 1997.	14
Table 3. Birds found dead or injured underneath or immediately adjacent to the Levee-Midway powerline.	15
Table 4. List of avian species recorded in the vicinity of the study site.	16
Table 5. Distribution of traffic load and reaction rate among spans observed during daylight hours.	15
Table 6. Results of multiple logistic regression analysis of total reactions during diurnal powerline crossings.	19
Table 7. Results of multiple logistic regression analysis of flaring behavior during diurnal powerline crossings.	19
Table 8. Results of multiple logistic regression analysis of tendency to change altitude during diurnal powerline crossings.	19
Table 9. List ofwading bird species recorded crossing the powerline at night, with percentages of flights that suggested nighttime foraging.	22
Table 10. Numbers of flocks and birds observed during night time conditions.	22

Introduction

This study was initiated in 1996 to study avian interactions with a newly-constructed power transmission line in Water Conservation Area 2B of the Everglades, and specifically to determine the potential mitigative effect of marks placed on the overhead ground wire of this line. The study of avian interactions with powerlines is a relatively new field, and any discussion of the specifics of this study is impossible without first reviewing the results of previous work. Consequently, this introduction is divided into four sections: a review of the literature on avian collisions with powerlines, a review of the effectiveness of marking procedures in reducing collisions, application of this knowledge to the this specific Everglades study situation and finally, a summary of this project.

1. Background: Avian collisions with powerlines.

Biological and demographic effects: Above-ground powerlines and their supporting structures show considerable potential for causing injuries and mortality of birds which collide with them. Although the majority of studies of avian interactions with powerlines indicate relatively little effect at the population level (Stout and Cornwell 1976, Anderson 1978, Lee 1978, Kroodsma 1978, Faannes 1987), powerlines can, in some instances, result in significant mortality at the population or local population level. Beer and Olgivie (1972) reported the loss of 30% of a population of Mute Swans (Cygnus olor) due to collisions with a single 0.4 km section of powerline. Similarly, 3 of 8 critically endangered California Condors (Gymnogyps californicus) were killed by collisions with powerlines during a 6-month period (APLIC 1994). Morkill and Anderson (1991) reported 25% of mortality of Whooping Cranes (Grus americana) was due to powerline collision on the breeding grounds, and collisions accounted for 39.3% of deaths in an introduced population in Gray's Lake in the Rocky Mountains population (Brown et al. 1987).

Factors affecting collision rates: A number of factors are known to strongly affect collision and mortality rates. Large, heavy-bodied birds are most susceptible to

collisions, probably because they require larger spaces and longer lead times to maneuver. Thus many of the studies on bird mortality have focused on swans (Banko 1956, Beer and Ogilvie 1972), geese (Blokpoel and Hatch 1976), cranes (Tacha et al. 1978, Brown et al. 1987, Morkill and Anderson (1991) and herons (Mead et al. 1979). Interestingly, raptors as a group seem to be less susceptible to collisions than other kinds of birds (Ohlendorff and Lehman 1986), possibly because they tend to be diurnal, and because the raptorial habit requires rapid maneuvering ability.

Young birds may also be more susceptible than older birds, probably because they are unfamiliar with the area, or have less well developed flight abilities (Anderson 1978). Juvenile Sandhill Cranes (Grus canadensis) collided more frequently with powerlines than adults (Morkill and Anderson 1991, Brown et al. 1987). Of 28 Dalmatian Pelicans (Pelecanus crispus) found dead underneath a powerline, Crivelli et al. (1988) found that 93% were immatures.

The placement of powerlines can also be critical. Powerlines placed at right angles to flight paths are likely to result in an increase in collisions, especially for flight paths used daily, such as between roost and feeding sites (Thompson 1978, Brown et al. 1987). Willard (1978) found that powerlines placed at right angles to canals caused high mortality for White Pelicans (Pelecanus erythrorhynchos) foraging along those canals.

Birds local to the area of the powerline also seem susceptible because they typically travel at relatively low altitudes and may often travel at times of day when visibility is reduced. Migrants generally travel at altitudes that are above most powerlines, although migrants may become susceptible to collision when fog or rain causes them to reduce altitude (Gathreaux 1972, 1978). Similarly, high winds may cause birds to reduce altitude and come into contact with powerlines (Scott et al. 1972).

Any conditions which cause reduced visibility are likely to result in increased collisions. Flights at sunrise and sunset are typical for many species; the reduced light conditions may be exacerbated by the increased likelihood of fog or mist at these times of day (Scott et al. 1972, Tacha et al. 1979). Collisions are also more likely at night, as evidenced by increased collisions in birds that make feeding flights after dusk and before sunrise (Scott et al. 1972, Krapu 1974, Brown and Drewien 1995). However, studies of

collisions at night are logistically difficult, and few studies have addressed the nature and extent of nocturnal collisions.

Travel in flocks may also lead to an increase in collisions. The visibility of following birds is reduced by those ahead, and the close confines of a flock may reduce the maneuvering room for flock members (Scott et al. 1972, Blokpoel and Hatch 1976, Whitten et al. 1992).

Effect of ground wires: The vast majority of avian collisions with powerlines occur as a result of contact with the overhead, or static, ground wire, rather than the larger-diameter conductor wires (Scott et al. 1972, Willard et al. 1978, Brown et al. 1987, Faanes 1987). This wire is designed to deflect lighting from the actual conductors, and so must be placed above the conductors. In addition, the ground wire is typically of a much smaller diameter than the conductors, and is not insulated. Thus the configuration of most powerlines often leads to a common scenario - birds that increase altitude to avoid the relatively obvious conductors are immediately placed in danger of colliding with the higher, much less visible wire.

2. Mitigation

There are several options available for reducing collisions of birds with powerlines. These include careful placement of powerlines (away from high use areas, away from airports and roads, close to trees, hills and other highly visible structures, parallel to flight paths, etc.), grouping powerlines together, modifying powerline structures (lower altitude, ground wire close to conductors), and placing marks on the ground wires (APLIC 1994). Since the Levee-Midway line already incorporated compactness of design, the only relevant option is marking.

A number of different types of marks have been developed since the first attempts in 1964 (Koops and de Jong 1982), including black vanes, aluminum balls, colored ribbons, plastic strips, raptor silhouettes, and plastic tubes (Scott et al. 1972, Beaulaurier 1981, Archbold 1987). Most of these devices are reported to have had some effect, though most of these earlier studies were poorly documented.

Bird-flight Diverters (BFD's) refers to several types of spirals or coils of wire, which when placed in-line on the ground wire of powerlines, may have the effect of greatly increasing the visibility of the ground wire. Total mortality has been shown in one study to have been reduced by 57 - 89%, depending on size and spacing of markers (Koops and deJong 1982). Spacing appears to be critical, and intervals of 5 meters between markers has been associated with an average mortality reduction of 90% (Koops 1993, in APLIC 1994).

Contrasting colors on markers may also be effective in reducing bird strikes, especially in poor visibility conditions (Brown and Drewien 1995). Similarly, 30-cm diameter aviation marker balls with a black vertical stripe have been associated with 54% reduced mortality of Sandhill Cranes, with behavioral avoidance of marked spans evident (Morkill and Anderson 1991). Contrasting-colored swinging plates and Spiral Vibration Dampers (SVD's) have been shown to reduce waterfowl collisions by 63% and 61%, respectively (Brown and Dreiwen 1995).

3. Potential hazards posed to birds by the Levee-Midway powerline:

The Everglades sections of the Levee-Midway powerline is located in marsh habitat in flat, open landscape with almost no topography, and usually within 300m of an existing levee (Figure 1). The study section is along the southern and western borders of WCA 2B, with all sections parallel to major roadways.

Several aspects of this powerline indicate that a potential for avian collisions exists. First, the powerline runs through an area that has a number of medium and large wading bird breeding colonies - both in WCA 2B and WCA 3A North (Frederick 1995). In many years, birds from the large Alley North colony in WCA 3A (as well as any colonies to the west and south of WCA 2) must regularly cross the powerline in daily trips to and from foraging areas in WCA 2B and 2A (Frederick 1995). Similarly, birds traveling from colonies in WCA 2B must also cross the Levee-Midway powerline because nearly all their foraging sites are outside the impoundment area. Since foraging trips are at low altitude, there is potential for collisions.

Wading birds may also forage and travel to foraging locations at night (Black and Collopy 1982, L. Bryan pers. comm.). When travelling at night, the potential for collisions with a powerline is presumably increased because of poor visibility. The species most commonly noted to travel at night are Great Blue Herons (Ardea herodias, Butler 1992, Black and Collopy 1982), and Wood Storks (Mycteria americana, L. Bryan unpublished).

Wading birds are generally at greater risk for collisions with powerlines than other birds simply because they are large-bodied birds with large wings, and relatively slow to maneuver. In addition, wading birds often travel in flocks, which further impairs their ability to avoid powerlines.

The potential for collisions may also be elevated in the study area because large numbers of juvenile birds are produced from these colonies, and these juveniles often follow adults to foraging grounds. These young birds are both naïve to the powerlines, and also have under-developed flight abilities.

There is conflicting evidence of impact of powerlines on wading birds in the Everglades. Whitten et al. (1992) found a very low rate of diurnal collisions (0.084%) with an existing powerline (immediately adjacent to the Levee-Midway corridor in WCA 3A north), during a two-year study. They reported 2 collisions in 26 hours of observation, and 2,371 bird crossings. All of their observations were during daylight, however, and the potential for night-time collisions was not evaluated. Wading birds were found feeding in large numbers directly underneath this powerline during nesting seasons of 1992, 1995 and 1996, and five crippled or dead birds were found in this area during anecdotal observations (Frederick 1995).

Since 1989, staff of the Florida Game and Freshwater Fish Commission have found considerable mortality of wading birds along the powerline bordering the Miami Canal in WCA 3A north, including large numbers of Great Blue Herons and Wood Storks (total of 170 dead birds/year). Many of the birds were thought initially to have been electrocuted by making contact with the closely-spaced conductors. However, subsequent necropsies showed that all birds had died from impacts. Although the configuration of conductors was changed in 1991, mortality has continued. This

powerline is of a different type than the Levee-Midway, and these results are not directly applicable to the Levee-Midway line. The relevance of this information is that that Great Blue Herons and Wood Storks were the most common casualties, and that diurnal foraging birds like Great and Snowy Egrets (Ardea albus and Egretta thula, respectively) were rarely found, suggests that much of the mortality was occurring at night.

Thus the Levee-Midway powerline shows potential for avian collisions, because of its placement and orientation relative to wading bird colonies and their feeding areas, because of the high susceptibility of wading birds and their young, and because of the possibility for nocturnal flights. The Levee-Midway powerline has special significance because at least two endangered species are often found in the vicinity - Wood Storks and Snail Kites (Rostrhamus sociabilis). Although the Snail Kites nest in the immediate area of the powerline in WCA 2A and 2B (Bennetts and Kitchens 1993), this species is probably low-risk because of their very slow flight patterns and diurnal habits.

4. Purpose of this project:

This project is required to fulfill the requirements of an Army Corps of Engineers permit condition, as a result of negotiations between Florida Power and Light Company and the U.S. Fish and Wildlife Service. It is an attempt to monitor for, and mitigate any negative impacts of the powerline on wild birds. The project has two main objectives:

1. Monitor the impacts of the WCA 2B section of the Levee-Midway powerline for potential mortality and morbidity of wild birds.
2. Test the effectiveness of a ground wire marking system using Bird Flight Diverters in reducing avian collisions.

The project is taking place over the period January 1996 - January 1998, encompassing two nesting seasons. This report covers the results of both years of study.

Methods

Study Site

We studied avian interactions on the Levee-Midway 550-kV transmission powerline on the eastern side of the Everglades, in Water Conservation Areas 2A and 2B in Broward County, Fl. (see Figure 1). The study section was in seasonally-flooded freshwater marsh, with sawgrass strands, tree islands, and wet prairie communities. The powerline was constructed in 1995/96, and the study section is composed of 34 spans along the levees bordering the southern and western edges of WCA 2B and the western edge of WCA 2A. Because of differences in treatments and compass orientation, we divided the study section into 3 study units—North, Central and South (see Figure 1).

North Section:

The North Section consisted of 10 spans along the western boundary of WCA 2A, and was oriented in a north-south direction. Habitat around the site was typical of Everglades long-hydroperiod wetland dominated by cattail (Typha latifolia), primrose (Ludwigia peruviana), arrowhead (Sagitarria spp.), willow (Salix spp.) and sawgrass (Cladium jamaicense). The right of way (ROW) immediately underneath the powerline was shorter-hydroperiod marsh covered by thick sawgrass. A parallel stand of tall (15 - 20 m) Australian Pines (Casuarina spp.) stood about 50 m to the west of this section. Immediately east of the powerline was the North New River Canal where large numbers of alligators (Alligator mississippiensis) were regularly seen. Visibility in the ROW at ground level was very poor, about 1-3 m, making searching for dead birds nearly impossible. This study section had no markers on the groundwires, but was otherwise identical construction to the powerline in the Central and South sections.

Central Section:

The Central Section included 6 spans along the western boundary of WCA 2B, and was oriented in the same north-south direction as the North Section. The habitat around the site was similar to the North, but the ROW underneath the powerlines was continuously flooded and covered by thick cattail and sawgrass. This section was paralleled to the west by the North New River Canal and Highway 27. There were no trees along Hwy 27, as there were in the North section, however. A dike also ran parallel

Figure 1. Map of the study site in WCAs 2 and 3 of the Everglades.

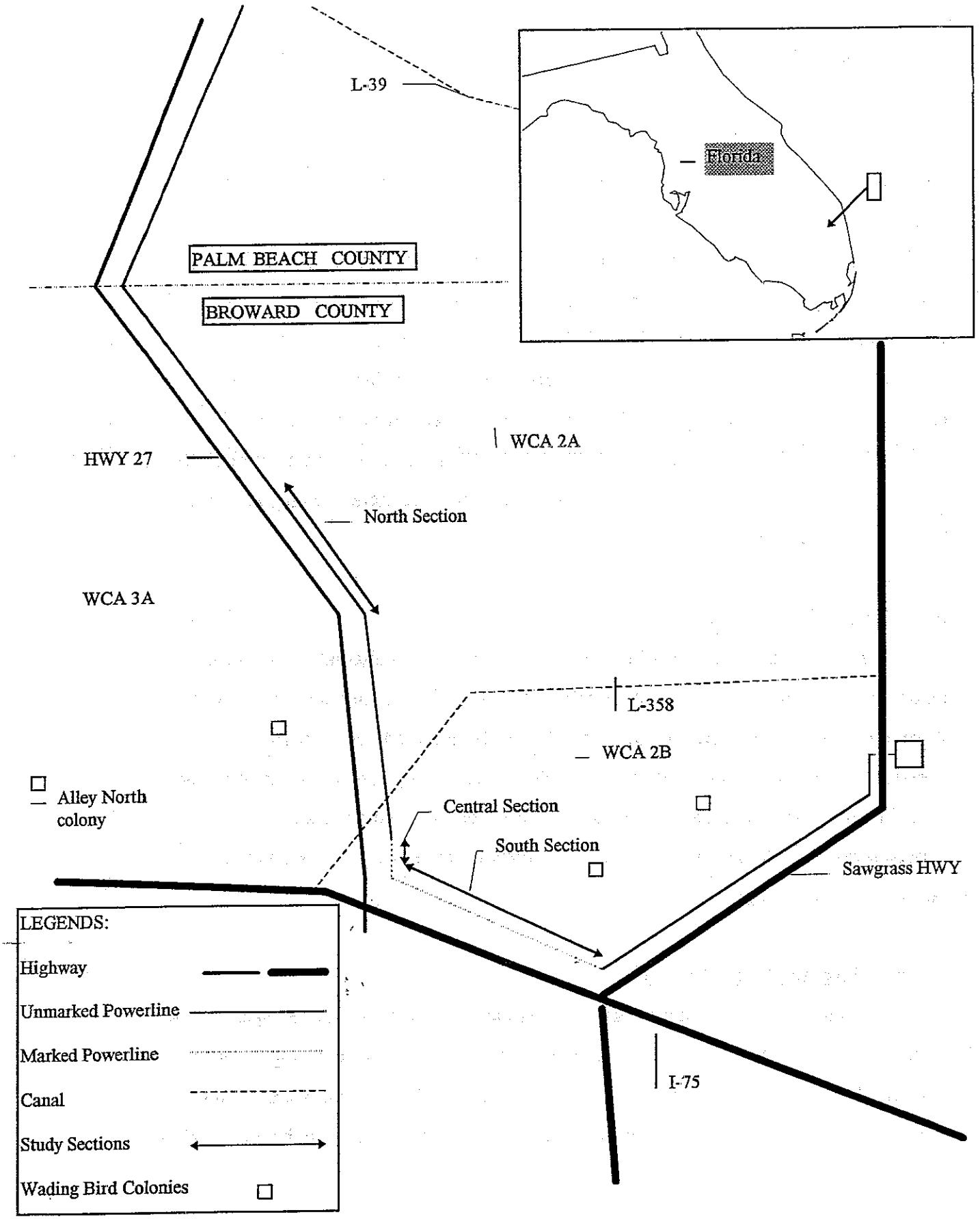

to the powerlines and canal, about 10m away from the powerlines. The visibility within the ROW at ground level was even poorer than that of North section, about 1-2 m. Alternate spans in this section were marked with Swan Flight Diverters on the groundwire (see below).

South Section

The South section consisted of 17 spans along the southern boundary of WCA 2B (see Figure 1), oriented in an northeast-southwest direction. The habitat is wetland similar to the central section. U.S. Hwy 75 runs parallel to, and about 150m south of the powerline. A dike and canal separated the powerlines from the roadway. The ROW of the south section was continuously flooded during the study period, and due to more open conditions, visibility in the ROW was much greater than in the Central and North sections. To the south of the powerline, the marsh has been developed into urban residences and construction, with use of heavy equipment was still going on throughout both years of study. Alternate spans of the South section were marked with Swan Flight Diverters (see below).

Ground wire marking system

On the Central and South Sections, the ground wires of alternate spans were marked with Swan Flight Diverters (Dumlinson, Lawrenceville, Georgia), placed every 25 m to give an effective sight distance of 12.5 m between markers when viewed horizontally. The effect of diverters thus could be detected by comparing the behavior of birds in marked and unmarked spans. On the North section, no diverters were put on the groundwires, and this section was used as a control for the effect of marking entire sections of spans alternately.

Diurnal Behavioral Observations:

Avian behavioral observations were conducted along the total of 34 spans of the South, Central and North sections. The observations were conducted during 12 March through 4 July, 1996 and 12 February through 11 July, 1997. In 1996, we performed 6 hours of observation every work day, during the 3 hours after sunrise in the morning and

3 hours before sunset in the evening. In 1997, we observed on two days during the late afternoon and one in mornings every week, during the same time periods used in 1996. Observers were positioned on the dikes beside the powerline by a given supporting H frame. Following initial random choice of spans sampled (span numbers were randomly chosen beforehand, no replacement), we concentrated our observations in spans in which bird activity was concentrated (see below). Within the areas of concentration, spans observed were randomly chosen. We watched for one hour during each observation and observers typically watched both the randomly selected span and the adjacent one during that time. Ten-power binoculars and 10 - 50 power spotting telescopes were used to observe the behavior of passing birds. A thermometer and anemometer were used for measuring weather data.

We recorded all instances in which birds approached the powerline and/or passed through it, and recorded the time, species, flock size, span number, flight, age, sex, flight altitude, direction of flight, reaction distance, and behavioral reaction if any, to the powerline (see Figure 2).

Flight altitudes were divided into five classes: H1—underneath the conductor wire; H2—between conductor and ground wires; H3—10 m above ground wires; H4—10-50 m above ground wires; H5—over 50 m above ground wires.

Reaction distance was the distance at which the bird reacted behaviorally to the powerline, and was divided into six classes: D0—between wires; D1—within 0-2 m away from wires; D2—between 2-5 m away; D3—between 5-20 m away; D4—between 20-50 m away; D5—beyond 50 m away (see Figure 2).

Reaction behaviors were also identified (see Table 1): Collide & Fly (CF)—bird collides with powerline and flies away; Collide & Down (CD)—bird collides with powerline and falls down; Flare (FR)—birds flares (rapid, veering increase in altitude, often appearing as a startle response); Ascend (AS)—bird ascends when approaching passing the powerline; Decend (DE)—bird descends when approaching the powerline or after passing it; Turn (TR)—bird turns away after approaching powerline; Sail (SL)—bird glides past the powerline with wings fixed after approaching the powerline in flapping flight; Flap (FL)—bird flaps when passing the powerline after approaching by

Figure 2. Classes of flight height and reaction distance

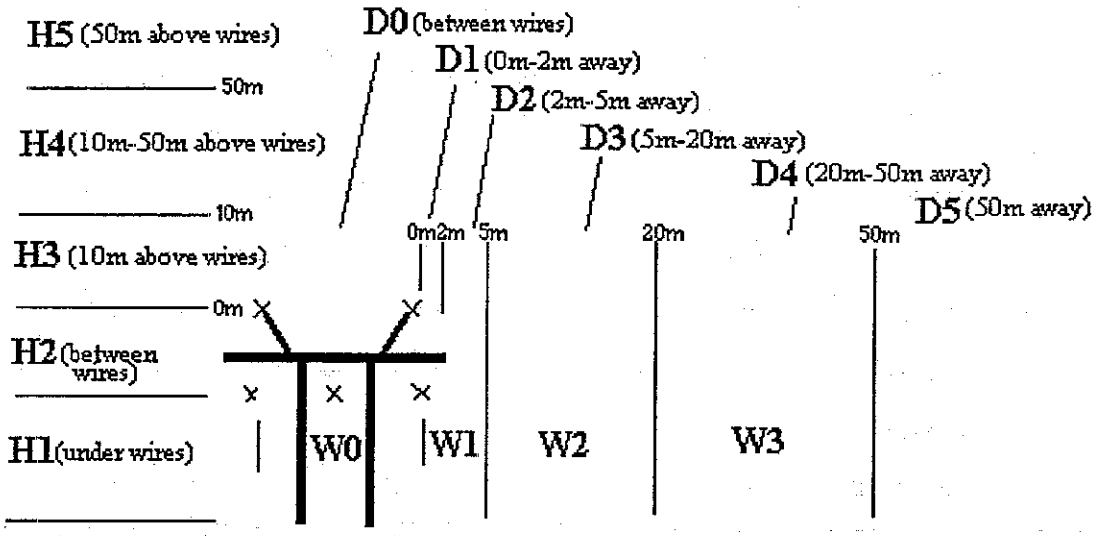

Table 1. Catalogue of behavioral reactions of birds crossing powerlines.

CF--------Bird collides with wire and flies away
CD--------Bird collides with wire and falls down to the ground
FR--------Bird shows startled flare towards wires but does not collide
AS--------Bird shows ascending when close to powerline or after passing
DE--------Bird shows descending when close to powerline or after passing
TR--------Bird shows turns close to powerline or after passing
SL--------Bird glides after approaching by flapping flight
FL--------Bird uses flapping flight after approaching by gliding within 50 m range at both sides of the wires.
RN-------Bird returns to the original approach side of the powerline after passing

gliding with wings in fixed position; Parallel (PL)—bird turns parallel to the powerline when approaching; Return (RN)—bird returns to the side originally approached and re-crosses the powerline once again from the original approach.

Weather conditions around the focal spans were taken at the beginning of each one hour observation, including temperature, wind speed, wind direction, cloud coverage, rain and fog status. We estimated cloud cover by noting the percentage of the sky occluded by clouds. Numbers of vehicles passing on the adjacent highway per minute was also recorded at the beginning of each observation session. In addition, any obvious change in weather condition or human activities around the span were also recorded, especially airboats passing close to or underneath the powerlines.

Searches for dead and injured birds:

Due to the deeply flooded, thick vegetation and frequent occurrence of scavengers such as alligators, vultures, raccoons and bobcats etc., around the study site, we made no systematic attempt to search for dead and injured birds. Previous work (Whitten et al. 1992) has shown that carcass counts in Everglades habitat are extremely inaccurate.

Statistical treatment of data:

In order to test whether the SFD's had any effect on the behavior of birds crossing the powerline during the day in 1996, we performed two types of comparisons: comparing birds crossing marked and unmarked spans of the powerline, and comparisons of birds crossing the alternately marked Central and Southern sections of the powerline with those crossing the completely unmarked Northern section. We used Chi-squared analyses for these initial comparisons, and combined data from all wading bird species when doing so.

As the study progressed, it became apparent that many factors besides marked/unmarked status might influence bird behavior around a powerline, and specifically might influence whether a bird reacted to a powerline while crossing it (e.g. wind, rain, flock size, time of day etc). In order to control for these effects while testing whether the SFD's had any influence on avian behavior, we used a multivariate approach for comparing these effects simultaneously. Because many of our variables were

categorical rather than numerical (such as presence or absence of rainfall or fog), we chose logistic regression as our statistical technique, using the ProcGenmod procedure in the SAS statistical package. For these analyses, we lumped all records of all species crossing the powerline during daylight hours during both years of study.

Nocturnal Radar & Night Vision Equipment Detection System:

We initiated the use of a combination of surveillance radar, night vision equipment, and binoculars to document nocturnal flight behavior during 1996, and devoted considerable time to collecting nocturnal information during 1997. The radar was used to detect birds approaching the powerline, and the night vision equipment was used to observe behavior when birds are in close proximity to the powerline. We acquired a small surveillance marine radar, Furuno model FR-7111 and mounted the antenna and motor on the top of a research vehicle. The radar had a maximum power of 10 kW, was fitted with a 1.8 m antenna, and powered by 12V batteries. We used an Excalibur Model 602, GEN III pocket night vision scope, or ten-power binoculars to directly observe the behavior of the birds when passing powerline.

In order to detect individual targets of the size of a wading bird at short range (1 - 500 m), we found three elements of the radar to be important: the power of the transmitter, the sensitivity of receiver, and the resolution of the display unit. In addition, after encountering considerable ground clutter or ground return despite all adjustments of adjusting power and sensititivity, we turned to the use of screening devices to reduce local clutter (ground return of nearby stationary objects, which obscure actual targets). We tried three types of devices which had been developed to solve the problem: an antenna deflector, a corral fence, and natural barrier fences.

Antenna Deflector

The antenna-mounted deflector was developed by Cooper et al. (1991). In our adaptation of this device, a sheet of aluminum plate was attached flush with the bottom of the radar antenna, which shielded the lower edge of the radar beam and thus blocked much

of the beam that would have been directed to the ground. The angle of the aluminum plate was adjustable (see Figure 3).

Corral Fence

Ground clutter may also be reduced for ground-based surveillance radars by using aluminum windowscreen placed at several meters distance from the antenna, in order to block return from more distant objects at low elevations. One solution has been to erect a fence of screening around the radar; for vehicular based radars this can be a corral into which the vehicle is driven. Blocking fences have been used and proposed in many other studies using radar to quantify bird behavior (Williams 1984). We constructed our fence of aluminum window screening and built the fence at least 4 m from the antenna center. The screening is attached to aluminum poles with hooks, and is relatively easy to transport (see Figure 4).

Natural barriers

Natural barriers (embankments, treelines, walls and hills) have been used effectively in past studies, as screens for ground clutter (Williams 1984). We found several types of natural barriers at the study site, such as tree stands, and concrete structures. Natural barriers worked better than the aluminum corral fence in that they had wider depth and could reduce the deflection, or degree to which the radar beam down to the ground.

Figure 3. Schematic of the antenna-mounted radar defelector, after Cooper et al. 1991.

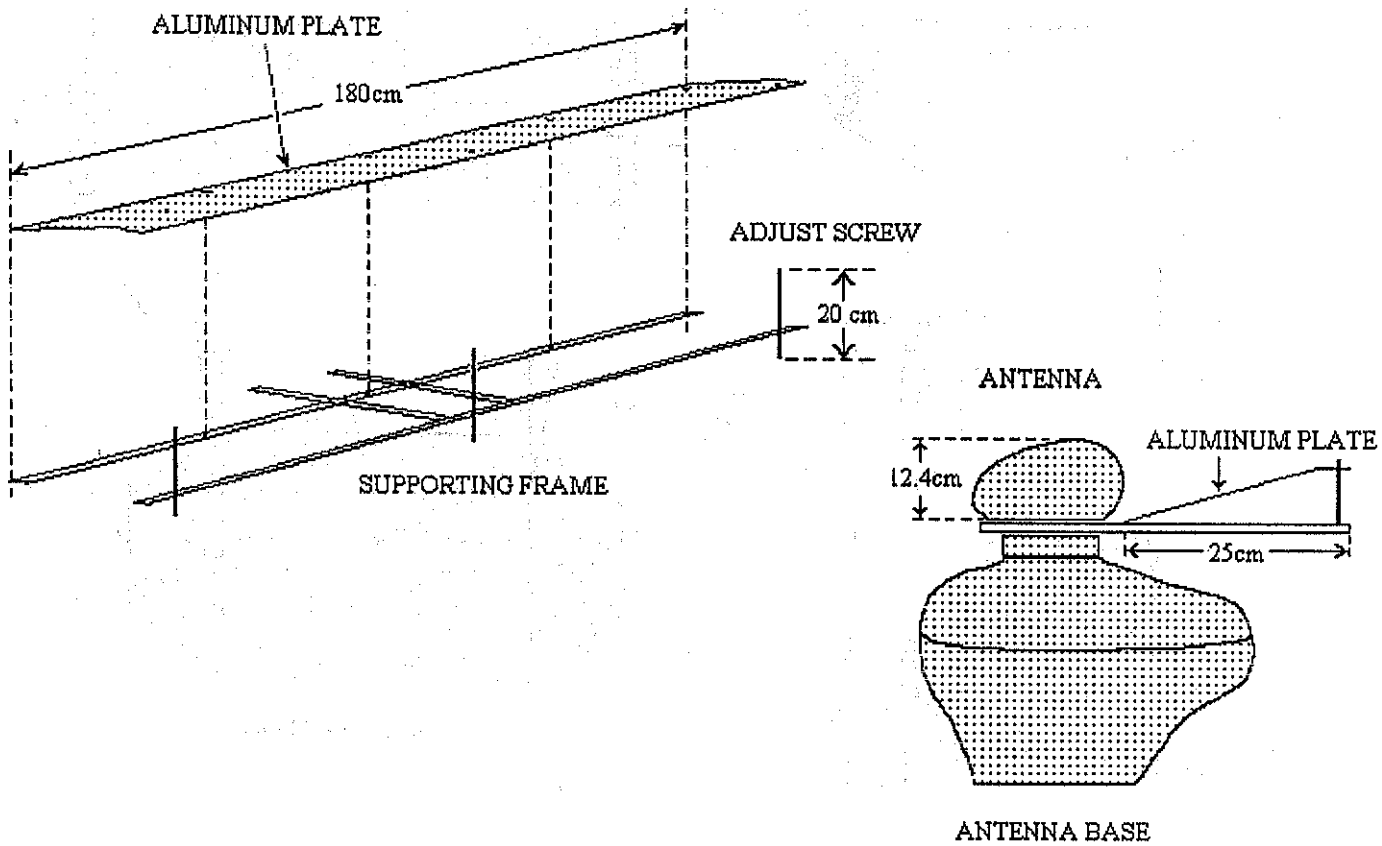

Figure 4. Schematic of a portable screen system for use in reducing ground return with the surveillance radar.

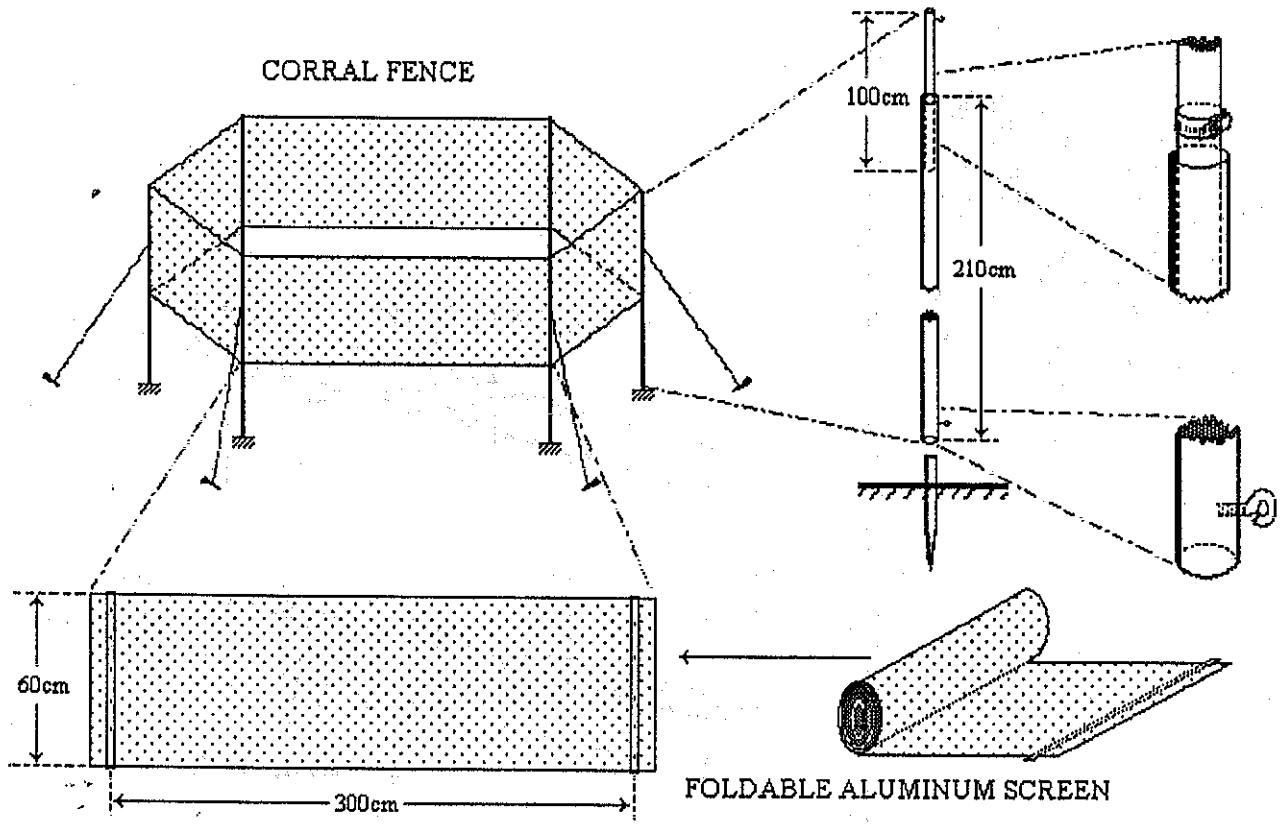

RESULTS

Diurnal Observations

We spent a total of 1,831 span-hours in direct observation of diurnal avian interactions with the powerline. We recorded a total 41,717 birds in 15,964 flocks between 12 March to 4 July, 1996 and 12 January to 11 July, 1997, averaging 22.7 birds per span-hour of observation. Observed flock size averaged 3 birds/flock, and varied from 1 to 1,500 (see Tables 2 and 2a).

No birds were recorded to have died from collision with the powerline during our diurnal observations. Of the total of 41,717 birds, two were observed striking the groundwire, giving a striking rate of 0.048%. Both collisions occurred in 1996, during daylight observations. The first was a Snowy Egret in the North section, which struck the ground wire immediately prior to a morning thunderstorm on 9 April. At the time, large numbers of Snowy Egrets, Great Egrets and Great Blue Herons were coming in to take shelter in bushes at the edge of the ROW. The bird approached the line from the west alone, passed the powerline above the ground wire, and collided with the groundwire while trying to turn back in between the groundwire and conductor. After collision, the bird dropped but gained control very quickly and flew off toward the east instead of trying to perch at the roost site. We noted no lasting change in flight ability after the collision. The second bird was a trailing Cattle Egret in a flock of 45 birds at 7:16 pm on 18 April. The bird grazed the groundwire, and kept flying within the flock formation without much apparent influence on its flight abilities.

We also noted a number of injured or dead birds incidentally during our travels on the dikes bordering the powerline (Table 3). Of these, the Wood Storks were significant in that they are endangered; one was probably killed by striking the powerline as it was found directly underneath the line, the other could have been killed either by striking a vehicle or by striking the powerline. The Great Egret found freshly dead probably hit the powerline during an early morning flight. The Cattle Egret and Osprey are not likely to have been flying at night, and so probably were injured during daylight hours.

Table 2 Numbers of waterbirds noted passing through the Levee-Midway powerline in 1,831 span-hours of diurnal observation during March-July in 1996 and January-July in 1997, by section

SPECIES		North		Central		South		Total	Percent
		1996	1997	1996	1997	1996	1997		
Anhinga	*Anhinga anhinga*	303	153	325	6	523	216	1526	3.66%
Double-crested Cormorant	*Phalacrocorax auritus*	347	278	112	8	578	349	1672	4.01%
Least Bittern	*Ixobrychus exilis*	3	0	1	0	17	4	25	0.06%
Black-crowned Night Heron	*Nycticorax nycticorax*	52	162	0	3	1	2	220	0.53%
Yellow-crowned Night Heron	*N. violacea*	0	1	0	0	19	22	42	0.10%
Green-backed Heron	*Butorides striatus*	226	53	42	30	121	19	491	1.18%
Tricolored Heron	*Egretta tricolor*	399	780	31	22	146	257	1635	3.92%
Little Blue Heron	*E. caerulea*	106	286	5	3	140	232	772	1.85%
Cattle Egret	*Bubulcus ibis*	69	364	22	33	2430	3996	6914	16.57%
Snowy Egret	*E. thula*	672	5890	70	8	326	83	7049	16.90%
Great Egret	*Casmerodius albus*	785	3329	148	102	223	197	4784	11.47%
Great Blue Heron	*Ardea herodias*	133	62	130	30	99	33	487	1.17%
Wood Stork	*Mycteria americana*	74	553	2	5	0	2	636	1.52%
White Ibis	*Eudocimus albus*	3734	3813	738	344	1901	4128	14658	35.14%
Glossy Ibis	*Plegadis falcinellus*	280	236	62	2	49	75	704	1.69%
Roseate Spoonbill	*Ajaia ajaja*	32	17	0	2	0	0	51	0.12%
Limpkin	*Aramus guarauna*	8	3	1	0	2	3	17	0.04%
Black-necked Stilt	*Himantopus mexicanus*	3	12	1	0	2	16	34	0.08%
Unidentified								350	0.84%
Total		**7,226**	**15,992**	**1,690**	**598**	**6,577**	**9,634**	**41,717**	

Table 2a. Characteristics of flocks of birds crossing the powerline during daylight hours in 1996 and 1997.

Parameter		1996		1997		All	
	Section	number	percent	number	percent	number	percent
Flocks	All	7,875	100.0	8,089	100.0	15,964	100.0
Aborts	All	161	2.0	22	0.3	183	1.1
Ascends	All	796	10.1	735	9.1	1,531	9.6
Descends	All	434	5.5	22	0.3	456	2.9
Ascends + desc	All	1,230	15.6	757	9.4	1,987	12.4
Flares	All	131	1.7	337	4.2	468	2.9
Turns	All	102	1.3	38	0.5	140	0.9
No reaction	All	6,251	79.4	6,489	80.2	12,740	79.8
Seen at H1	All	2,092	26.6	1,196	14.8	3,288	20.6
Seen at H2	All	1,017	12.9	760	9.4	1,777	11.1
Seen at H3	All	3,096	39.3	5,103	63.1	8,199	51.4
Seen at H4	All	1,146	14.6	952	11.8	2,098	13.1
Seen at H5	All	440	5.6	78	1.0	518	3.2
Directions of approach:							
east	central (am)	352		14		366	
east	central (pm)	171		165		336	
west	central (am)	208		7		215	
west	central (pm)	189		145		334	
east	north (am)	742		627		1,369	
east	north (pm)	1,290		2,022		3,312	
west	north (am)	849		1,762		2,611	
west	north (pm)	639		342		981	
north	south (am)	940		14		954	
north	south (pm)	522		432		954	
south	south (am)	605		35		640	
south	south (pm)	1,196		2,509		3,705	

Table 3. Birds found dead or injured underneath or immediately adjacent to the Levee-Midway Powerline between March and July, 1996.

Species	Date	Condition	Comments
Osprey	15 May	broken wing, alive	found during daylight, later died
Cattle Egret	28 June	alive, could not fly	eventually flew but with difficulty
Great Egret	19 March	dead but warm	found in early morning
Wood Stork	25 March	dead, decomposed	found directly underneath powerline
Wood Stork	7 April	freshly dead	found on adjacent roadway
Grackle	7 May	scavenged	found on levee
Great Egret	May	dead	found on roadway

No birds were found dead or injured under the powerline during 1997, though we spent less time observing birds during the day, and incindentally searching for birds on the ground during 1997.

We recorded a total of 56 species of birds in the vicinity of the study site during our observations (Table 4). Twenty two species were water birds, 8 were raptors, and 10 passerines. Of the wading birds, 20.2% of the flocks showed some reaction to the powerline, and 2.93% flared. 20.6% of the wading bird flocks passed underneath the conductors, 11.1% between the ground and conductor wires, 51.4% within 10 m above the ground wires, and 16.4% 10-50 m above the ground wires. During morning observations, 79.5% of flocks in the South section were in a southerly direction. During evening observations, 59.8% percent of flocks in the same section were towards the north. In the North and Central sections, 62.0% of flocks were in a westerly direction in the morning and 73.5% of the flocks were in a easterly direction in the afternoon. This suggests that many of the birds were traveling to or from one or more of the colonies within WCA 2B.

Two strong flight corridors were detected within our study area (Figure 6 , Table 5). One was at the eastern end of the South section, where large numbers of Cattle Egrets regularly flew between roost and nesting sites in WCA 2B, and foraging areas to the south. This flight corridor was extremely tight and accounted for a large portion of the flocks/hour seen in the south section. For instance, 34% of birds seen within the central and south section passed through Span 25 and 26. Another strong flight corridor was located at the southern end of the north section, between Spans 67 and 68 during 1996, and spans 70 and 74 during 1997. Large numbers of White Ibises, Snowy Egrets, Great Egrets, Great Blue Herons, Little Blue Herons and Tricolored Herons traveled between the large Alley North Colony in WCA 3A, and foraging locations in WCA 2A through this corridor.

Effects of the Swan Flight Diverters

Given that we observed extremely small numbers of duirnal collisions of birds with any part of the powerline, analysis of the effect of diverters on collisions was not

Table 4. List of avian species recorded in the vicinity of the study sites along the Levee-Midway powerline, March-July in1996 and January-July in 1997.

Anhinga	*Anhinga anhinga*
Double-crested Cormorant	*Phalacrocorax auritus*
Least Bittern	*Ixobrychus exilis*
Black-crowned Night Heron	*Nycticorax nycticorax*
Yellow-crowned Night Heron	*N. violacea*
Green-backed Heron	*Butorides striatus*
Tricolored Heron	*Egretta tricolor*
Little Blue Heron	*E. caerulea*
Cattle Egret	*Bubulcus ibis*
Snowy Egret	*E. thula*
Great Egret	*Casmerodius albus*
Great Blue Heron	*Ardea herodias*
Wood Stork	*Mycteria americana*
White Ibis	*Eudocimus albus*
Glossy Ibis	*Plegadis falcinellus*
Roseate Spoonbill	*Ajaia ajaja*
Limpkin	*Aramus guarauna*
American Coot	*Fulica americana*
Black-necked Stilt	*Himantopus mexicanus*
Killdeer	*Charadrius vociferus*
Greater Yellowlegs	*Tringa melanoleuca*
Lesser Yellowlegs	*T. flavipes*
Pectoral Sandpiper	*Calidris melanotos*
Forster's Tern	*Sterna forsteri*
Least Tern	*S. antillarum*
Caspian Tern	*S. caspia*
Black Vulture	*Coragyps atratus*
Turkey Vulture	*Cathartes aura*
Snail Kite	*Rostrhamus sociabilis*
Northern Harrier	*Circus cyaneus*
Red-shouldered Hawk	*Buteo lineatus*
Bald Eagle	*Haliaeetus leucocephalus*
Osprey	*Pandion haliaetus*
Merlin	*Falco columbarius*
American Kestrel	*Falco sparverius*
Rock Dove	*Columba livia*
Mourning Dove	*Zenaida macroura*
White-winged Dove	*Z. asiatica*
Common Ground-Dove	*Columbina passerina*

Table 4 (cont.). List of avian species recorded in the vicinity of the study sites along the Levee-Midway powerline, March-July in1996 and January-July in 1997.

Smooth-billed Ani	*Crotophaga ani*
Common Nighthawk	*Chordeiles minor*
Belted Kingfisher	*Ceryle alcyon*
Red-bellied Woodpecker	*Melanerpes carolinus*
Common Flicker	*Colaptes auratus*
Pileated Woodpecker	*Dryocopus pileatus*
Tree Swallow	*Tachycineta bicolor*
Purple Martin	*Progne subis*
American Crow	*Corvus brachyrhynchos*
Fish Crow	*Corvus ossifragus*
Gray Catbird	*Dumetella carolinensis*
European Starling	*Sturnus vulgaris*
Palm Warbler	*Dendroica palmarum*
Common Yellowthroat	*Geothlypis trichas*
Redwing Blackbird	*Agelaius phoeniceus*
Common Grackle	*Quiscalus quicula*
Boat-tailed Grackle	*Q. major*

Figure 6. Numbers of flocks crossing the powerline during daylight, by span number.

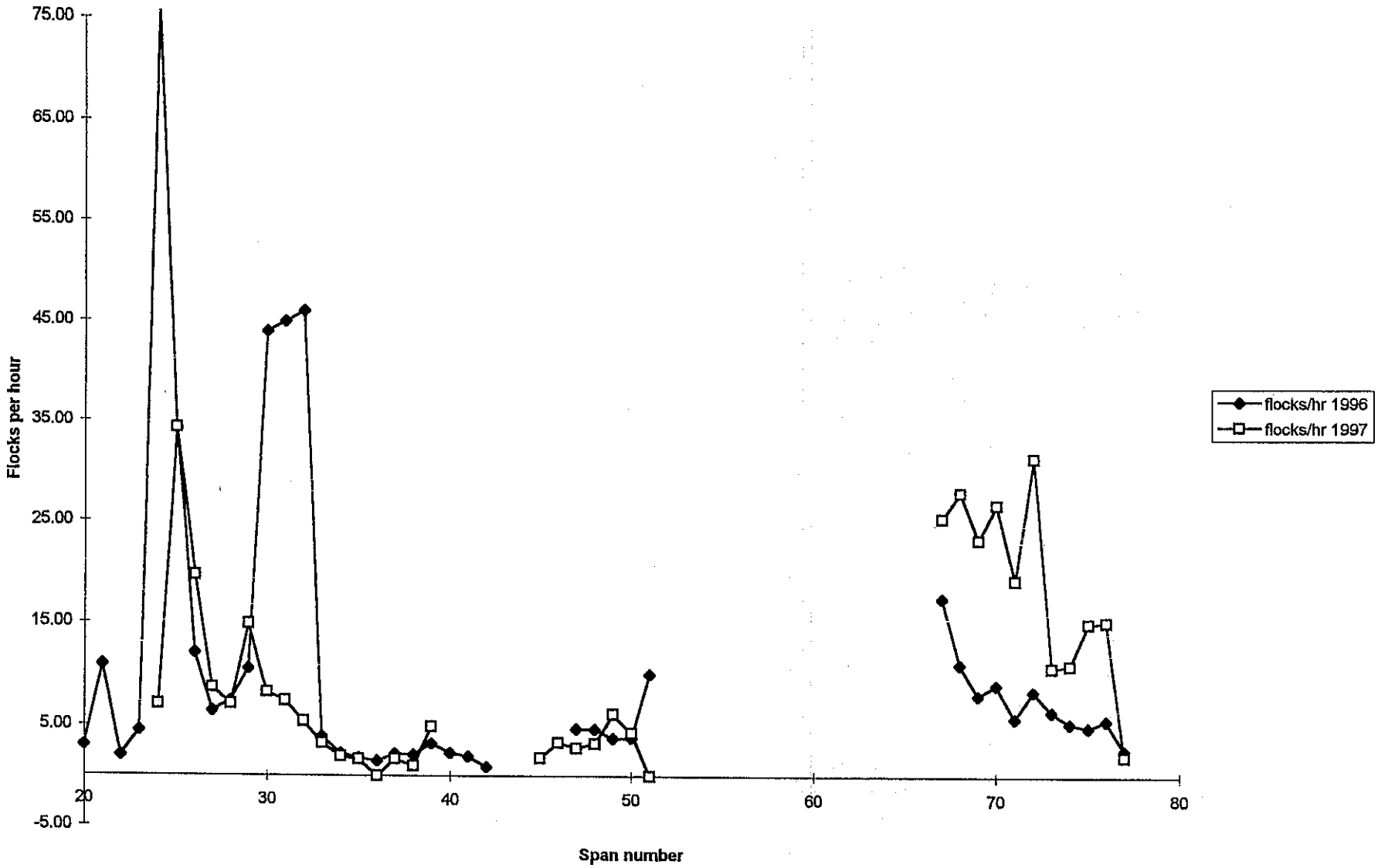

Table 5. Distribution of traffic load and reaction rate among spans observed during daylight in 1996 and 1997.

Year	*Span*	*# flocks*	*Hours observing*	*flocks/hr*	*reactions/hr*	*flares/hr*
1996	20	3	1.00	3.0	0.0	0.0
	21	11	1.00	11.0	4.0	1.0
	22	4	2.00	2.0	0.0	0.0
	23	9	2.00	4.5	2.0	0.0
	24	99	1.30	76.2	16.9	2.3
	25	644	18.80	34.3	7.2	1.3
	26	383	31.63	12.1	2.3	2.3
	27	239	37.37	6.4	1.2	1.2
	28	275	37.23	7.4	1.8	1.8
	29	376	35.40	10.6	2.8	2.8
	30	300	36.18	44.0	2.4	2.4
	31	207	38.98	45.0	1.6	1.6
	32	141	31.80	46.0	1.4	1.4
	33	106	26.88	3.9	0.9	0.9
	34	84	37.07	2.3	0.5	0.5
	35	66	37.07	1.8	0.4	0.4
	36	63	41.47	1.5	0.4	0.4
	37	84	38.65	2.2	0.4	0.4
	38	78	37.42	2.1	0.3	0.3
	39	105	32.60	3.2	0.6	0.6
	40	73	31.97	2.3	0.6	0.6
	41	54	27.78	1.9	0.4	0.4
	42	11	12.07	0.9	0.1	0.1
	44	4	1.00	4.0	0.0	0.0
	45	148	30.27	4.9	1.1	1.1
	46	180	39.43	4.6	0.8	0.8
	47	182	38.35	4.7	1.1	1.1
	48	182	38.95	4.7	0.9	0.9
	49	146	38.70	3.8	0.7	0.7
	50	87	22.83	3.8	0.7	0.7
	51	11	1.08	10.2	0.0	0.0
	67	538	30.65	17.6	2.3	2.3
	68	541	48.42	11.2	1.6	1.6
	69	362	44.97	8.1	1.3	1.3
	70	381	41.78	9.1	1.0	1.0
	71	277	47.43	5.8	1.1	1.1
	72	405	47.80	8.5	1.3	1.3
	73	309	47.72	6.5	0.8	0.8
	74	209	39.28	5.3	0.7	0.7

Year	*Span*	*# flocks*	*hrs. observing*	*flocks/hr*	*reactions/hr*	*flares/hr*
	75	174	35.15	5.0	0.8	0.8
	76	164	29.25	5.6	0.9	0.9
	77	32	12.03	2.7	0.2	0.2
1997	24	7	1	7.0	0.0	0.0
	25	957	27.90	34.3	8.3	8.3
	26	628	32.05	19.6	3.7	3.7
	27	252	28.93	8.7	2.3	2.3
	28	245	34.68	7.1	1.8	1.8
	29	388	26.02	14.9	5.0	5.0
	30	190	23.00	8.3	3.6	3.6
	31	145	19.53	7.4	2.7	2.7
	32	75	13.88	5.4	2.1	2.1
	33	53	16.47	3.2	0.7	0.7
	34	35	18.05	1.9	0.2	0.2
	35	16	9.60	1.7	0.2	0.2
	36		1.00	0.0	0.0	0.0
	37	2	1.17	1.7	0.0	0.0
	38	1	1.02	1.0	0.0	0.0
	39	5	1.02	4.9	1.0	1.0
	40		0.00			
	41		0.00			
	44	2	0.00			
	45	24	13.45	1.8	0.1	0.1
	46	56	16.70	3.4	0.3	0.3
	47	48	17.12	2.8	0.3	0.3
	48	63	19.57	3.2	0.5	0.5
	49	106	17.18	6.2	0.6	0.6
	50	34	7.85	4.3	0.4	0.4
	51		0.00			
	66	35	1.45	24.1	9.7	9.7
	67	592	23.32	25.4	2.1	2.1
	68	769	27.53	27.9	2.0	2.0
	69	599	25.74	23.3	1.5	1.5
	70	721	26.97	26.7	2.2	2.2
	71	418	21.72	19.2	0.8	0.8
	72	720	22.90	31.4	3.7	3.7
	73	251	23.13	10.9	1.4	1.4
	74	250	22.60	11.1	1.3	1.3
	75	232	15.37	15.1	2.1	2.1
	76	165	10.83	15.2	2.3	2.3
	77	4	2.00	2.0	0.5	0.5

possible. However, we suspected that the diverters might have had effects on the avoidance behavior of birds as they approached the powerline, and searched for possible effects of the Swan Flight Diverters on the behavioral reactions of birds. Specifically, we hypothesized that a more visually obvious groundwire would cause birds to show obvious differences in reactions to marked and unmarked lines, either in terms of total reactions, or in the rate at which they flared, or attempted to correct their flight path. We did not make any predictions *a priori* about the direction of the results - only that there would likely be a difference. The reasons why we did not predict a direction have to do with the uncertainties of how a bird perceives the groundwire. If the marks make the line more obvious, it might lead to more flares or reactions because the bird sees the line shortly before it would otherwise have collided with it. On the other hand, if the marks allow the bird to perceive the line at a considerable distance from the line, one might expect fewer flares and reactions because the birds would have corrected their flight paths well in advance of approaching the powerline.

It should be noted that the effect of SFD's could be expressed in two different ways. One arises from the prediction that birds passing marked and unmarked spans within the alternately marked section should show differences in behavior. The other arises from the possibility that the alternately marked/unmarked section might be perceived by birds as generally more obvious than a line that had no marks whatsoever on it. Thus effects of marking could be manifested either as differences in marked and unmarked spans, or as differences in the two treatment sections (North, with no marks, and Central/South, with alternately marked spans).

Chi^2 analyses - 1996

Within the alternately marked and unmarked *spans* of the central and south *sections*, 3,378 wading birds (42%) passed marked *spans*, and 4,592 (58%) passed through unmarked spans during our observations in 1996. We found no significant difference in the numbers of birds approaching marked and un-marked *spans* (paired-t-test, binomial distribution, $t = 0.177$, $p = 0.1$), suggesting that the marks were neither strong attractants nor repellents. 950 of the birds (44% of total reactions) showed

reactions in marked spans, 1,192 (56%) showed reactions in unmarked spans, 34 (47% of flares) flared in marked spans, and 57 (53%) flared in unmarked spans. We found no significant differences in the rates of reactions (X^2=2.589,p=0.1) or flares (X^2= 0.736, p>0.25) between marked and un-marked *spans*.

In the North Section, 1,304 birds (39%) showed some reaction to the powerline, and 52 (1.6%) flared during 1996. We found a significant difference in the rate of both reactions (X^2=110.3, p<0.001) and flares (X^2=36.52 p<0.001) between the completely unmarked *section* (North) and the alternately marked (Central and South) *sections*, with higher rates of both in the Central and South sections.

Multivariate logistic regression analyses – 1996 and 1997

The Chi-squared analyses were unsatisfying because they did not take into account other variables that might have influenced bird behavior, such as weather, visibility, flock size, or wind. Using logistic regression procedures, we looked for effects of marked spans, and of section treatment on much larger array of variables were taken into account. We analyzed all records of wading birds and Double-crested Cormorants for all sections and years combined, using (in separate analyses) rate of all reactions combined, rate of flaring behavior, and rate of altitude changes (ascends and descends combined), as our dependent variables. Independent variables were: mark status of the span (marked or unmarked), section treatment (alternately marked spans within the treatment, or totally unmarked), wind speed, wind direction relative to flight direction (headwind, tailwind, or sidewind), cloud cover, and rainfall/fog (Tables 6 - 8). In the analysis of total reactions, we added altitude as an independent variable. Since flares and changes in altitude implied that the bird was already at or near the altitude of the powerline, altitude was not included as an independent variable in those analyses.

In the analysis of total reactions, we found significant effects of all variables on rate of reactions, with the exception of mark status, and rain/fog (Table 6). When the effects of other variables were taken into account, the analysis indicated more total reactions in the alternately marked sections than in the unmarked section, and increases in the rate of total reactions with higher wind speed, and altitude, and lower cloud cover.

Table 6. Results of multiple logistic regression analysis of factors explaining variance in tendency of 14,396 flocks to react (ascend/descend, flare, abort, or turn) when approaching the powerline during daylight hours. Note that data from 1996 and 1997 are pooled in this analysis. Bolded p-values are considered statistically significant.

Variable	df	Direction of effect	p
Section	1	-	***0.0001***
Marked/Unmarked	1	-	0.1145
Wind speed	1	+	***0.0001***
H1	1	+	***0.0001***
H2	1	+	***0.0001***
H3	1	+	***0.0001***
Headwind	1	+	***0.0419***
Tailwind	1	+	***0.0008***
Sidewind	1	-	***0.005***
Cloud cover	1	-	***0.0001***
Rain/fog	1	-	0.5972

Table 7. Results of multiple logistic regression analysis of factors explaining variance in tendency of 14,806 flocks to flare when approaching the powerline during daylight hours.
Note that data from 1996 and 1997 are pooled in this analysis, and that altitude categories were not included in the analysis, since birds that flared were by definition at or close to the same altitude as the powerline. Bolded p-values are considered statistically significant.

Variable	df	Direction of effect	p
Section	1	-	***0.0001***
Marked/Unmarked	1	-	***0.0001***
Wind speed	1	-	0.7728
Headwind	1	-	0.3442
Tailwind	1	+	0.1525
Sidewind	1	-	0.2203
Cloud cover	1	+	***0.029***
Rain/fog	1	+	***0.013***

Table 8. Results of multiple logistic regression analysis of factors explaining variance in tendency of 3,004 flocks to change altitude (ascend/descend) when approaching the powerline during daylight hours. Note that data from 1996 and 1997 are pooled in this analysis, and that altitude categories were not included in the analysis, since birds that ascended or descended were by definition at or close to the same altitud as the powerline. Bolded p-values are considered statistically significant.

Variable	df	Direction of effect	p
Section	1	-	***0.0001***
Marked/Unmarked	1	+	***0.0025***
Wind speed	1	+	***0.0026***
Headwind	1	+	0.1321
Tailwind	1	-	0.6056
Sidewind	1	-	0.4558
Cloud cover	1	+	0.7272
Rain/fog	1	+	0.4045

In the analysis of flaring rate, we found significant effects of section, mark status, cloud cover, and rain/fog (Table 7). All other variables had an insignificant effect on the tendency of birds to perform flares. The analysis indicated that when the effects of other variables were taken into account, there was a greater flaring rate in the alternately marked section than in the totally unmarked sections, fewer flares in the marked spans than in unmarked spans, and that flares increased with cloud cover and rain or fog.

In the analysis of changes in altitude, we found significant effects of section, mark status, and wind speed (Table 8). The analysis indicated that when effects of other variables were taken into account, there were more changes in altitude in the alternately marked sections than in the totally unmarked section, that there were more changes in altitude in marked spans than in unmarked spans, and an increase in changes in altitude with increases in wind speed.

Nocturnal Observations

In order to detect individual targets the size of a wading bird at very close range (<0.5 km), three elements of the radar tuning have been found to be important: the power of transmitter, the sensitivity of the receiver and resolution of the display unit. Probably the largest problem has been the elimination of ground return, also called ground clutter. Ground return is especially a problem for close range, low altitude targets (Williams 1984). We tried three kinds of modification to reduce the noises created by ground clutters: radar deflector, corral fence and natural barrier. The radar deflector did not prove to be satisfactory in reducing ground clutter. The problem was that the deflector was too close to the antenna, and the radar beam was apparently distorted so that it continued to hit the ground and produced considerable ground return, either by going over the deflector, or by causing side lobes. In speaking with experts on radar, there appeared to be agreement that the deflector was causing distortion in the return, and that no reliable return pattern would result. The corral fence produced no apparent distortion, but also did not eliminate the ground return. We found that use of natural barriers was by far the most effective solution - this was achieved by driving the vehicle down the side of the levee, so that the levee embankment itself served to block low-altitude clutter.

The use of the night vision scope was limited under low light conditions, because the resolution was generally poor, even at close range. Under bright conditions, the night vision scope resulted in severe eye strain on observers. We found a high quality pair of binoculars could do as good job as the more expensive night scope. But since all direct observation equipment needed light, even weak light, the ability to identify targets and their behavior depended on cloud cover, moon phase, and weather. We were unable to perform visual observations on the darkest nights and under inclement weather, which is exactly when one would expect bird collision rates to increase. In addition, our range of vision was limited to low altitudes. Even under the best of light conditions, we could only observe birds at less than about 70m above ground.

We conducted 129 hours of nocturnal radar and NVE/binoculars observation. Since the radar documented four spans at a time, and the visual means only two, this represents approximately 516 span-hours of radar documentation, and 258 span-hours of visual observations. We recorded 1,010 targets (flocks or individual birds) on radar during nighttime conditions, and of these, 364 actually crossed the powerline (0.70 targets/span hour). The remaining targets either were flying in directions parallel to or away from the powerline, or were lost from the radar at some point.

We visually observed 9 species, totaling 667 birds in 187 flocks (51.4% of radar targets, average of 3.57 birds/flock), crossing the powerline at night (see Tables 9 and 10). None of the 667 birds that we observed directly collided with powerline. However, we had 40 cases in which targets noted approaching the powerline on radar, subsequently disappeared from radar at or close to the powerline (11% of targets crossing). In four of these cases (10%) we were able to make visual contact with these birds, and in all four cases the birds crossed the powerline, apparently just underneath the altitude at which they could be picked up by radar. There is therefore little evidence to support the notion that these 40 "lost" targets actually struck the powerline, and it seems more likely that they were lost from radar because they either flew under the powerline, or landed close to the powerline (there was a canal close to the powerline in many cases).

There is evidence that birds were flying higher at night than during the day, and so may have been able to avoid the powerline during nocturnal flight. Of the 364 targets we

Table 9 . List of wading birds recorded crossing the powerline at night, with percent of flights indicating night foraging ("Reverse" movements, see below).

SPECIES		Total	Percent of targets	% RF*
Black-crowned Night-heron	*Nycticorax nycticorax*	76	11.39%	86.80%
Green-backed Heron	*Butorides striatus*	6	0.90%	16.70%
Tricolored Heron	*Egretta tricolor*	10	1.50%	0.00%
Little Blue Heron	*E. caerulea*	6	0.90%	16.70%
Snowy Egret	*E. thula*	21	3.15%	0.00%
Great Egret	*Casmerodius albus*	14	2.10%	0.00%
Great Blue Heron	*Ardea herodias*	55	8.25%	23.60%
Wood Stork	*Mycteria americana*	52	7.80%	84.60%
White Ibis	*Eudocimus albus*	423	63.42%	0.20%
TOTAL		667	100%	19%

RF*--"Reverse Flight", or flights away from the colony in the evening, towards the colony in the morning, suggesting nocturnal foraging behavior.

Table 10. Numbers of flocks and individual wading birds observed during nighttime conditions, showing numbers and percentages of reactions of various types, and numbers and percentages of powerline crossings at various altitudes during March-July, 1997.

	Total reactions	No reaction	Flare	Ascend	H3	H2	H1
Flocks	187	123 65.8%	2 1.07%	5 2.67%	92 49.2%	23 12.3%	47 25.1%
Birds	668	585 87.6%	2 0.30%	5 0.75%	556 83.2%	26 3.89%	57 8.53%

documented as crossing the powerline at night using radar, we could have reasonably observed half using visual means, since we were able to visually document only two spans at a time, while the radar documented four. Of the 182 targets crossing the areas we observed visually, we observed 70 (38%) at the altitude of the ground wire or less. Our night vision scope and binoculars allowed us to observe birds only to 70 m altitude under the best of conditions, and we were unable to directly document birds flying higher than that. However, the remaining birds detected by radar but not seen by us visually must have been flying higher than the groundwire. This suggests that 80.8% of the birds fly higher than the groundwire. The comparable rate from diurnal observations at the same site was 16.39%. Thus four times as many birds are flying above the groundwire at night as during the day.

The majority of targets crossed the powerline during crepuscular conditions (early morning or late evening), with numbers declining sharply towards the middle of the night (Figure 7). Six hundred seven of all targets detected (61%) occurred within one hour after sunset and one hr before sunrise. We recorded more flights early in the season (February and March) than later (see Figure 8).

Figure 7. Frequency distribution of nocturnal flights/hr in WCA2 of the Everglades

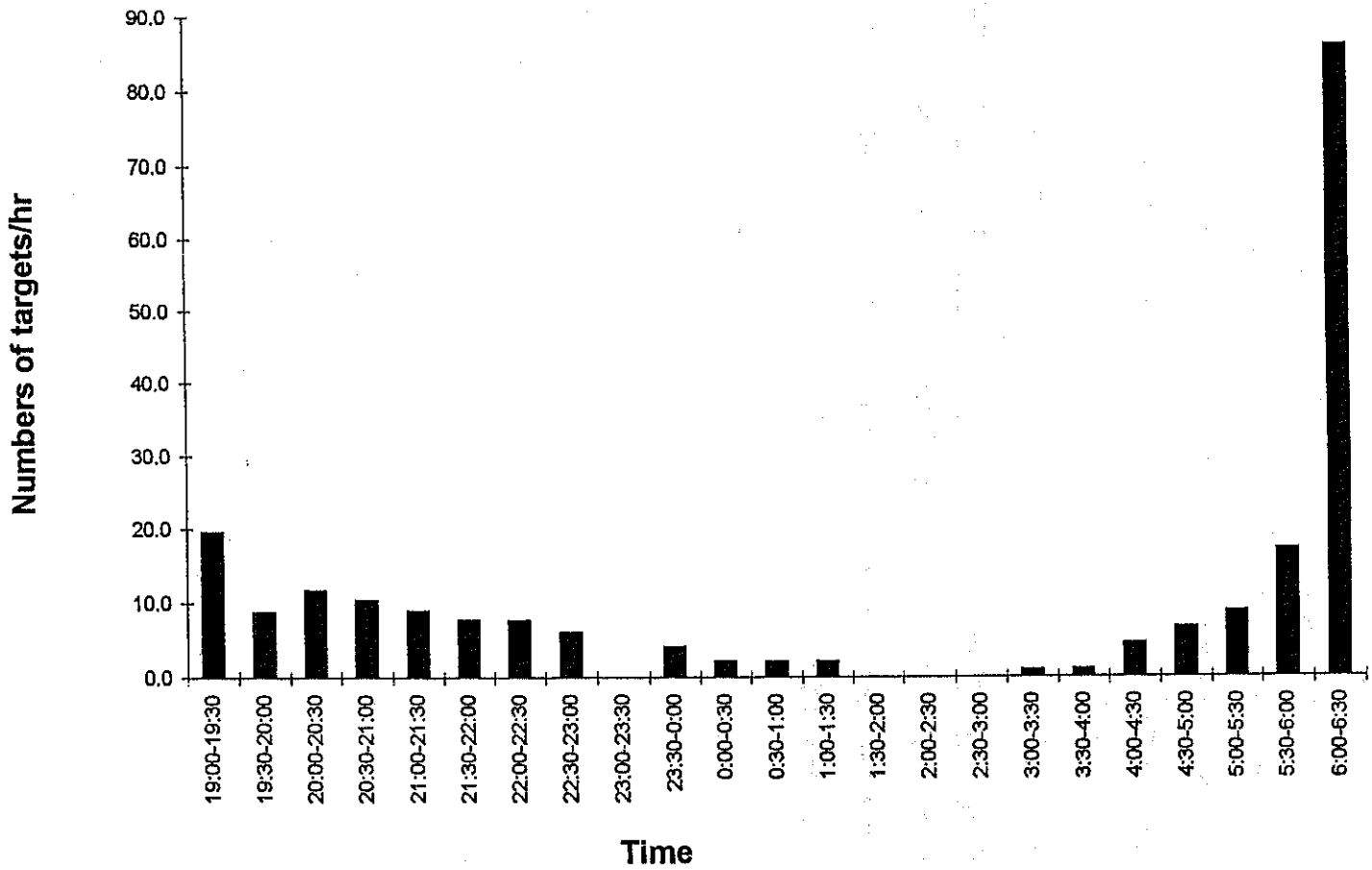

Figure 8. Seasonal changes in nocturnal avian traffic in the vicinity of the Levee-Midway powerline

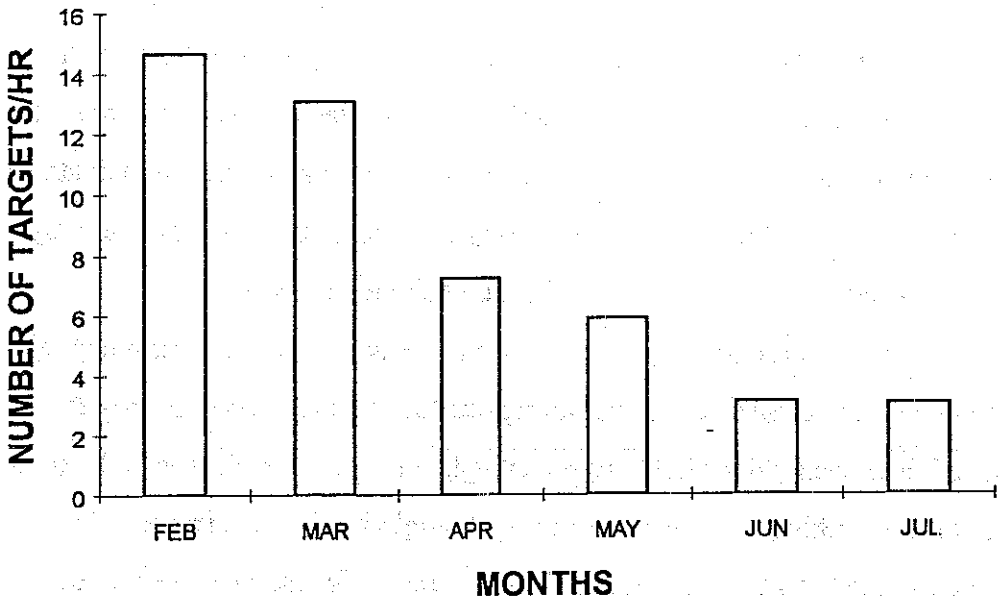

Discussion

Risk of diurnal collisions

We recorded an extremely low rate of diurnal collisions of birds with the powerline (0.048%). This rate was in the same range as that reported for diurnal collisions in the same area by Whitten et al. (1992, 0.088 %). Differences between the two studies include powerline construction, sample size, and season of observations. The collisions we witnessed during our scheduled observation time never resulted in death or obvious injury to the birds. This suggests that during daylight hours, there is relatively little risk to populations of birds crossing the Levee-Midway powerline.

However, we did find other evidence that birds are being injured during daylight hours. The timing and circumstances surrounding our finding the injured Osprey and Cattle Egret, and the recently dead Great Egret, suggest that all three birds were likely to have been injured by striking the powerline during daylight hours. It is impossible to tell at what time of day the Wood Stork we found was injured. We also have no way of estimating the collision rate from the carcasses we found. The fact that one Wood Stork, one Great Egret, one Cattle Egret, and one Osprey were found almost directly under the powerline suggests the majority of the carcasses and injured birds we found were likely to have been collision victims. Given the extremely small amount of time that we spent searching for carcasses and injured birds (all carcasses were found incidentally while driving on the dike, and no attempt was ever made to systematically search any area), and the very poor visibility in the area under the powerline, we feel that the injured birds and carcasses we found are significant, and that they may be representative of a larger number of collisions.

Because our sampling schedule was random with respect to geographical location on the powerline, and included over 41,000 birds, we feel strongly that we have accurately measured the actual collision rate for the 3 hours of the day following sunrise and preceding sunset. It is possible that we missed collisions during the middle of the day, since we had relatively little observation time devoted to those hours. However, the

literature suggests that collisions should be highest at sunset and sunrise, and most infrequent during the middle of the day.

Perhaps the most robust finding of this study to date is the sheer number of birds passing through the powerline (over 41,000 birds in 1,256 span hours, about 12 birds per span per hour). This finding indicates high wading bird usage of the area during the breeding season, and illustrates the potential for both diurnal and nocturnal travel through the powerline area.

Effects of the Swan Flight Diverters: marked vs unmarked *spans.*

The fact that there was no difference in the rate of birds crossing the marked and unmarked spans suggests that marking with SFD's does not attract, nor repel birds to any discernable degree. Our analyses suggest that the SFD's have a significant effect in changing the powerline-approach behavior of the birds. Although there was no detectable difference in total reactions in marked and unmarked spans when analyzed using binomial and Chi-squared tests, or when using the more powerful logistic regression analysis, there is good reason to believe that this result may be confounded by having lumped all types of reactions. For instance, we found flares were decreased, and the tendency to change altitude at some distance from the powerline was increased, in marked spans.

These two behaviors are obviously affected in different ways by the diverters, and they are consistent with an interpretation that the diverters made the ground wire more visible to birds. If the ground wire were more visible, one would expect birds to avoid the wire by changing altitude at some distance away from the wire, rather than by flaring immediately prior to hitting the wire. Because these effects were in different directions for the two behaviors, it seems very likely that when flares and altitude changes are added together to produce the variable "total reactions", we merely cancelled the effects of marking that were apparent when we looked at each one individually. Thus in hindsight, the lack of a significant relationship of mark status and total reactions is to be expected.

Effect of Bird Flight Diverters: alternately marked vs. totally unmarked *sections.*

Our analyses indicate that there was a difference in avian flight behavior between the alternately marked, and the unmarked sections of the powerline. Using the 1996 data, the Chi-squared analyses showed a significantly higher rate of both total reactions and of flares in the alternately marked Central and South sections than in the North section. The logistic regression analyses using the entire dataset also showed a significant increase in total reactions, flares, and changes in altitude in the alternately marked Central and South sections than in the unmarked North section.

It is not clear what these strong and consistent differences are attributable to. It is tempting to suggest that differences in marking (alternately marked spans vs. totally unmarked spans) are causally related to the differences in behavior. One can imagine that a bird at 100m altitude might well perceive a string of alternately marked spans as a line, to react to the entire line as a whole rather than to the individual spans, and to react to a totally unmarked section very differently. The indication of more reactions of all types in the alternately marked section could indicate that the birds are actually seeing the powerline and taking evasive action more often than in the totally unmarked line.

However, it is also true that the North section was not an exact replicate of the Central and South sections. The North section was at least 16 km to the north of the centers of the other two sections, and the birds passing over the North section were probably coming from a relatively more distant colony (the Alley North colony in WCA 3A North) than those in either of the more southerly sections. In addition, although the marsh habitat surrounding the North section was similar to the other two sections, a line of tall (30m) Australian Pines along highway 27 immediately to the west of the North section may well have affected the approach behavior of the birds passing this section. For now, we are unable to say with certainty whether we have found a difference that is due to marking scheme, or one due purely to attributes of the different locations.

Effects of altitude, weather and wind on diurnal reactions to powerlines

We found that total reactions, and changes in altitude both increased as wind speed increased, though wind speed did not have a significant effect upon flaring rate. We also

found significant effects of wind direction relative to flight path, on total reactions. This finding is not surprising - one might expect that maneuvering around obstacles will be more likely when the birds flight path is influenced by winds than when not. This could be manifested in several ways - birds with tailwinds might be more likely to overshoot their targets, while those with headwinds might generally include more variations in their flight path than in a windless condition.

We found surprisingly weak effects of rain and fog on behavior around powerlines. We found no effect of these reduced-visibility conditions on total reactions or changes in altitude. We did, however, find that flares increased in frequency as rain and fog increased. The lack of findings may be a result of small sample size, or may indicate that under low-visibility conditions, reactions other than flares are relatively unaffected.

We also found effects of cloud cover on behavior of birds crossing powerlines, but the effects were inconsistent across the tests. Total reactions decreased under increasing cloud cover, but flares increased with increasing cloud cover, and changes in altitude were not significantly related to cloud cover. A biological explanation for this pattern of results does not readily present itself.

Nocturnal flight activity and risk of nocturnal collisions

The results we present suggest that nighttime collisions of wading birds with the powerline must be a relatively rare event. We saw no collisions in 258 span-hours of direct observation, encompassing 667 birds crossing the powerline. This is not because there are very few birds moving around - we documented 2.5 birds crossing the powerline per span-hour. Whether the birds can actually see the powerline at night is not known. The very low collision rate must be attributable in part to the fact that birds are generally flying higher at night than in the day. During the day, only 17% are flying above the groundwire, whereas at night, our results suggest over 62% fly above the powerline. This increase in altitude at night has been demonstrated by Bruderer (1997) who found that nocturnal migration was at about 700m altitude, while diurnal flights averaged only about 400m. However, while the collision rate we documented was zero, it is not obvious that the powerline poses little risk to night-flying birds. It should be remembered that we were

unable to see birds directly and document the potential for collisions during the times when birds might be most likely to collide - under low light and poor visibility conditions.

The vast majority of the nocturnal radar targets (94%) were documented before 22:00 or after 04:30 EDT. The vast majority of nocturnal flights therefore occurred within two to three hours after sunset in the evening or before sunrise in the morning. The very low flight volumes during the middle of the night suggest that few birds are traveling in the middle of the night, and that once at nocturnal foraging sites, wading birds tend to stay put.

Since all but the smallest colonies were found in WCA 3A during the period of study, birds coming into WCA 2 could be assumed to be traveling towards feeding grounds. Most of the birds traveling in crepuscular hours were probably not foraging at night. Eighty one percent of the total of 667 birds seen at night flew from foraging grounds to roosting or breeding sites in the evening, and from roost or breeding sites to foraging grounds in the morning; 19% of the birds flew in the reverse direction. Black-crowned Night Herons and Wood Storks had the strongest tendency towards this "reverse" movement pattern (86.8% an 84.6% of flights, respectively). Great Blue Herons, Green-backed Herons and Little Blue Herons also showed nocturnal foraging behavior though with lower frequency (23.6%, 16.7% and 16.7% of flights, respectively).

The flight volume had a strong seasonal component (Figure 8). Early in the breeding season, nocturnal activity was the highest. This abundance gradually declined by June and July. This is most parsimoniously explained by the overall seasonal decline of the wading bird population in the Everglades during that time, as suggested by our daytime observation and Systematic Reconnaissance surveys.

Literature Cited

Anderson, W. L. 1978. Waterfowl collisions with power lines at a coal-fired power plant. Wildlife Society Bulletin 6:77-83.

APLIC 1994. Mitigating Bird Collisons with Power Lines: The State of the Art in 1994. Edison Electric Institute. Washington, D. C.

Archibald, K. 1987. The conservation status of the breeding ground of the red-crowned crane in Hokkaido, Japan. Pgs. 64 - 86 in: G. Archibald

Banko, W. E. 1956. The trumpeter swan - its history, habits, and population in the United States. North American Fauna 63:325-326.

Beaulaurier, D. L. 1981. Mitigation of bird collisions with transmission lines. Bonneville Power Administration, U. S. Dept. of Energy, Portland OR.

Beer, J. V. and M. A. Ogilvie. 1972. Mortality. Pgs. 125-142 in: Peter Scott and the Wildlfowl Trust, the Swans. Houghton Mifflin, Boston.

Bennetts, R. E. and W. M. Kitchens. 1993. Estimation and environmental correlates of survival and dispersal of Snail Kites in Florida. Annual progress report, Everglades National Park, Homestead Fl.

Black, B. B. and M. W. Collopy. 1982. Nocturnal activity of Great Blue Herons. Journal of Field Ornithology 53:403.

Blokpoel, H. and P. R. M. Hatch. 1976. Snow geese, disturbed by aircraft, crash into powerlines. Canadian Field Naturalist 90:195.

Brown, W. M., R. C. Drewien, and E. G. Bizeau. 1987. Mortality of cranes and waterfowl from powerline collisions in the San Luis Valley, Colorado. Pgs. 128 - 136 in: J.C. Lewis (ED). Proceedings of the 1985 Crane Workshop. Platte River Whooping Crane Maintenance Trust, Grand Island, Nebraska.

Brown, W. M. and R. C. Drewien. 1995. Evaluation of two power line markers to reduce crane and waterfowl collisions. Wildlife Society Bulletin, in press.

Bruderer, B. 1997. The study of bird migration by radar II: Major achievements. Naturwissenshaften 84:45-54.

Butler, R. B. 1992. Great Blue Heron. Species account #25 in: Poole, A., Stettenheim, P. and F. Gill. (eds.). The Birds of North America. Philadelphia Academy of Natural Sciences, Philadelphia, Pa.

Cooper, B. A., R. H. Day, R. J. Ritchie and C. L. Cranor. 1991. An improved marine radar system for studies of bird migration. Journal of Field Ornithology 62:367-377.

Crivelli, A. J., H. Jerrentrup and T. Mitchev. 1988. Electric power lines: a cause of bird mortality in Pelecanus crispus Bruch, a world endangered species, in Porto-Lago, Greece. Colonial Waterbirds 11:301-305.

Faanes, C. A. 1987. Bird behavior and mortality in relation to power lines in prairie habitats. U. S. Fish and Wildlife Service Technical Report #7, Washington, D.C.

Frederick, P. C. 1995. Wading bird nesting success studies in the Water Conservation Areas of the Everglades, 1992 - 1995. South Florida Water Management District, West Palm Beach, Fl. 91 pp.

Gathreaux, S. A., Jr. 1972. Behavioral responses of migrating birds to daylight and darkness: a radar and direct visual study. Wilson Bulletin 84:136-148.

Gathreaux, S. A., Jr. 1978. Migratory behavior and flight patterns. Pgs. 23 - 50 in: M. L. Avery (ed.). Impacts of transmission lines on birds in flight. FWS/OBS-78/48. U. S. Fish and Wildlife Service, Washington, D. C.

Koops, F. B. J. and J. de Jong. 1982. Reducing the number of bird collisions by marking high voltage lines in the Heerenveen area. Overdruk uit: Elekrotechniek 60:641-646.

Krapu, G. L. 1974. Avian mortality from collisions with overhead wires in North Dakota. Prairie Naturalist 6:1-6.

Kroodsma, R. L. 1978. Evaluation of a proposed transmission line's impact on waterfowl and eagles. Pgs. 69-76 in: M. L. Avery (ed.) Impacts of transmission lines on bird in flight. FWS/OBS-78/48. U. S. Fish and Wildlife Service, Washington, D. C.

Lee, J. M., Jr. 1978. Effects of transmission lines on bird flights: studies of Bonneville Power Administration Lines. Pgs. 93-116 in: M. L. Avery (ed.) Impacts of

transmission lines on bird in flight. FWS/OBS-78/48. U. S. Fish and Wildlife Service, Washington, D. C.

Mead, C. J., P. M. North, and B. R. Watmough. 1979. The mortality of British grey herons. Bird Study 26:13-22.

Morkill, A. E. and S. H. Anderson. 1991. Effectiveness of marking powerlines to reduce sandhill crane collisions. Wildife Society Bulletin 19:442-449.

Olendorff, R. R. and R. N. Lehman. 1986. Raptor collisions with utility lines: an analysis using subjective field observations. Pacific Gas and Electric Co., San Ramon, Ca.

Scott, R. E., L. J. Roberts, and C. J. Cadbury. 1972. Bird deaths from powerlines at Dungeness. British Birds 65:273-286.

Stout, J. and G. W. Cornwell. 1976. Nonhunting mortality of fledged North American waterfowl. Journal of Wildlife Management 40:681-693.

Tacha, T. C., D. C. Martin, and C. G. Endicott. 1979. Mortality of sandhill cranes associated with utility highlines in Texas. Pgs. 175-176 in: J. C. Lewis (ed.) Proceedings 1978 Crane Workshop. National Audubon Society, New York.

Thompson, L. S. 1978. Mitigation through engineering and habitat modification. Pgs. 51-92 in: M. L. Avery (ed.) Impacts of transmission lines on bird in flight. FWS/OBS-78/48. U. S. Fish and Wildlife Service, Washington, D. C.

Whitten, M. L., C. G. Nace, Jr., and J. R. Newman. 1992. Avian monitoring study: protocol development and recommendations. Report to Florida Power and Light Co., December 1992. KBN Engineering, Gainesille, Fl.

Willard, D. E. 1978. The impact of transmission lines on birds (and vice versa). Pages 5-13 in: M. L. Avery (ed.) Impacts of transmission lines on bird in flight. FWS/OBS-78/48. U. S. Fish and Wildlife Service, Washington, D. C.

Williams, T. C. 1984. How to use marine radar for bird watching. American Birds 38:982-983.