U.S.NRC

United States Nuclear Regulatory Commission

Protecting People and the Environment

Safety of Spent Fuel Transportation

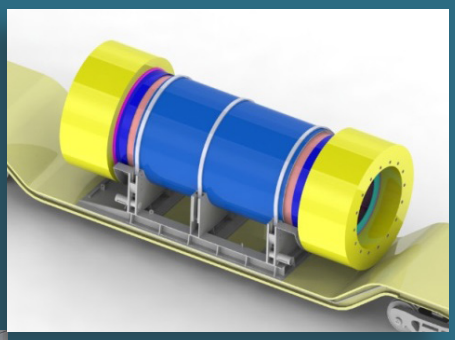

The Agencies: Who Does What?

The U.S. Nuclear Regulatory Commission (NRC) is an independent agency created by Congress. Its mission is to regulate the nation's civilian use of radioactive materials in a way that protects public health and safety and the environment. The NRC regulates commercial nuclear power reactors; research, test, and training reactors; nuclear fuel cycle facilities; and medical, academic, and industrial uses of nuclear materials. The NRC also regulates packaging for the transport, storage, and disposal of nuclear materials and waste, and licenses the export and import of radioactive materials.

The U.S. Department of Transportation (DOT) coordinates with the NRC to set rules for the packaging of nuclear materials. DOT also works with the NRC and affected States to regulate their transport. DOT regulates carriers, sets standards for routes, and is responsible for international agreements on the transport of all hazardous materials.

The U.S. Department of Energy (DOE) is responsible by law for disposal of spent fuel from the nation's nuclear power reactors.

The International Atomic Energy Agency (IAEA) is a forum for scientific and technical cooperation in the nuclear field. Part of the United Nations, the IAEA sets global regulations in many areas of the nuclear industry. IAEA's regulations for materials packaging and transport serve as a model for the United States and other nations.

Cover Photos:

(Left) Transportable spent fuel storage casks sit on a storage pad. *(Courtesy: Holtec International)*

(Middle) Spent fuel transport cask arrives at Rancho Seco. *(Courtesy: Areva)*

(Right) Schematic of spent fuel transport cask. *(Courtesy: Holtec International)*

(Bottom) Spent fuel transport cask arrives on site.

Page 1 Photos:

(Left) Empty transportable spent fuel storage system arrives at Prairie Island. *(Courtesy: Areva)*

(Right) Transportable spent fuel storage system is readied for storage. *(Courtesy: Areva)*

(Bottom) Transport package is placed inside conveyance vehicle. *(Courtesy: NAC International)*

The Nuclear Regulatory Commission

The NRC regulates the nuclear fuel cycle from beginning to end. Starting when the uranium is taken from the ground, the NRC oversees its processing and manufacture into fuel to be used in reactors. The NRC also plays a role in ensuring the safe transportation, storage, and permanent geologic disposal of used fuel.

The NRC works to protect public health and safety, the environment, and our national security. To keep the public's confidence, the NRC aims to do its work openly and to be effective, efficient, and realistic.

Proper handling of nuclear materials helps to protect the safety of the public and plant workers. To achieve this aim, the NRC works with the DOT and DOE in the United States, and with the IAEA internationally. Together, these agencies help make sure nuclear materials are packaged and transported safely around the world.

This publication explains the NRC's role in the safe packaging and transport of spent nuclear fuel from commercial nuclear power plants. The NRC oversees the design, manufacture, use, and maintenance of containers for these radioactive shipments. However, the NRC does not control the timing or destination of spent fuel shipments.

The NRC has three main functions:

1. *To set standards and develop regulations*
2. *To issue licenses for nuclear facilities and nuclear materials users*
3. *To inspect facilities to ensure that NRC regulations are being met*

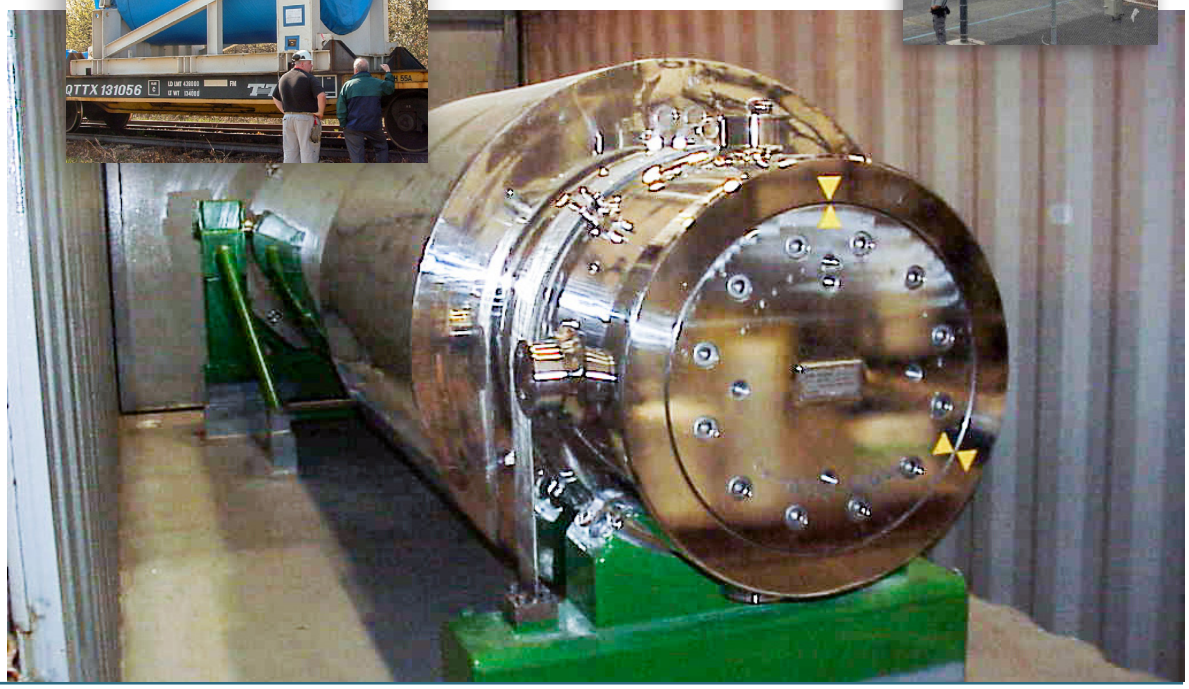

What is Spent Fuel?

Radiation

About half of the public's average annual radiation exposure comes from natural sources. These sources include radon, the human body, outer space, rocks, and soil. This natural radiation is called background and can vary greatly from place to place. Nearly all of the rest of an average person's exposure comes from medical sources, such as x-rays and diagnostic tests that are used in health care. Radiation that can be traced to radioactive materials transport makes up a tiny fraction of an average person's overall exposure. Such low levels of exposure are very unlikely to have any biological effect, but if they did they would be too small to be detectable. The human body responds to radiation in the same way whether it comes from natural or manmade sources.

Nuclear reactors make electricity and, as a waste product, spent fuel. Uranium fuel can power a reactor for a number of years until it needs to be replaced. The used fuel is then known as spent fuel. It must be stored safely until it can be shipped offsite.

The Nuclear Waste Policy Act sets a policy for safe, permanent disposal of spent fuel and other high-level radioactive wastes. Congress in 1987 selected Yucca Mountain in Nevada as the site to be studied for a repository deep underground. DOE applied to the NRC in 2008 for a permit to construct the repository there. But DOE withdrew its application in 2010. The NRC's role is to assess whether the facility would meet NRC regulatory requirements. Other policy considerations are up to DOE and Congress.

All nuclear power reactors move their spent fuel first into pools for storage on site. As the amount of spent fuel in the pool increases, many reactors are also using dry casks for storage. The NRC reviews and approves the designs for these systems.

The NRC would also review any proposal for central interim storage of spent fuel. Eventually, spent fuel will need to be transported to a central storage or disposal facility from sites around the country. These shipments would likely be made by rail or on public highways.

Because spent fuel is highly radioactive, people may wonder:

- **How does the NRC protect the public from radiation during transport?**
- **What is the likelihood one of these shipments will be involved in an accident?**
- **How well can the shipping containers withstand an accident and prevent the release of nuclear materials?**

The NRC addresses these and other questions as a part of its ongoing efforts to ensure safe transport. As new technology and real-world information become available, the NRC evaluates that information against its regulations. It is important to know that spent fuel has been shipped safely within the United States and abroad for more than 40 years.

The Key to Ensuring Safety: the Spent Fuel Shipping Container

Spent fuel is highly radioactive and must be shielded and contained to be transported safely. Safe shipment requires a large, robust spent fuel container called a cask.

The NRC regulates the design and construction of these casks to ensure the public is protected. Containers used to move spent fuel by rail or highway are designed to withstand severe accidents. In the U.S. and internationally, these designs must pass a series of tests that mimic accident forces. The NRC reviews spent fuel containers very carefully to ensure they meet the design standards and test conditions in the regulations.

These containers must be able to survive four tests involving impact, puncture, fire, and submersion in water. During and after the tests, the casks must contain the nuclear material, limit radiation doses to acceptable levels, and prevent a nuclear chain reaction.

To protect workers and the public, a cask has walls of steel and shielding materials 5 to 15 inches thick and a massive lid. Truck containers weigh about 25 tons when loaded with one to two tons of spent fuel. Rail containers can weigh as much as 150 tons and can carry up to 20 tons of spent fuel. The ends of these transportation containers are encased in structures called impact limiters. In an accident, these impact limiters would crush and absorb the impact forces, protecting the package and its contents.

Spent fuel containers are tightly sealed and provide heavy shielding to protect anyone who might be near the cask during transport.

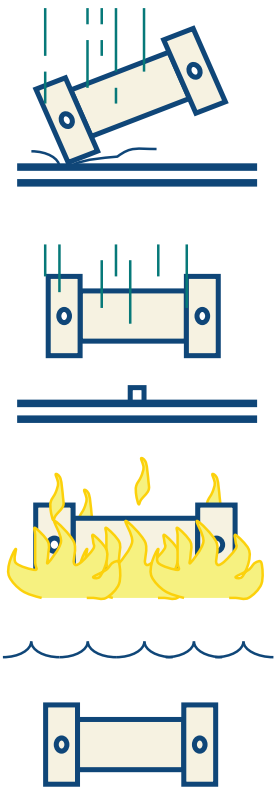

The NRC requires spent fuel shipping casks to survive four tests in sequence:

1. free-drop impact,

2. puncture impact,

3. fire, and

4. water immersion.

Truck carries NAC LWT transport package.

Cask designers may use several techniques to demonstrate their containers are safe. They can use computer analyses, comparisons with other designs, component testing, physical testing of a scale model, or a combination of these techniques. Most often, they combine analyses and physical testing. They meet with technical review staff from the NRC, explain their design, and provide supporting documents in an application. The NRC evaluates each design, examines the information in depth, and performs its own calculations when needed. NRC reviewers are experts in different areas of science and engineering. They include structural and materials engineers and safety specialists with advanced degrees and many years of experience.

Once the NRC is satisfied that a design meets the requirements, it issues a certificate of compliance. This certificate describes the approved design (including what materials must be used), the authorized contents, and the dimensions of the container. Then the containers can be manufactured and used. Manufacturers and shippers have programs in place to ensure the containers meet design specifications throughout fabrication and transportation. These programs are known as quality assurance. To ensure the casks meet the certificates, NRC staff inspects both the manufacturer and the facilities that will use them.

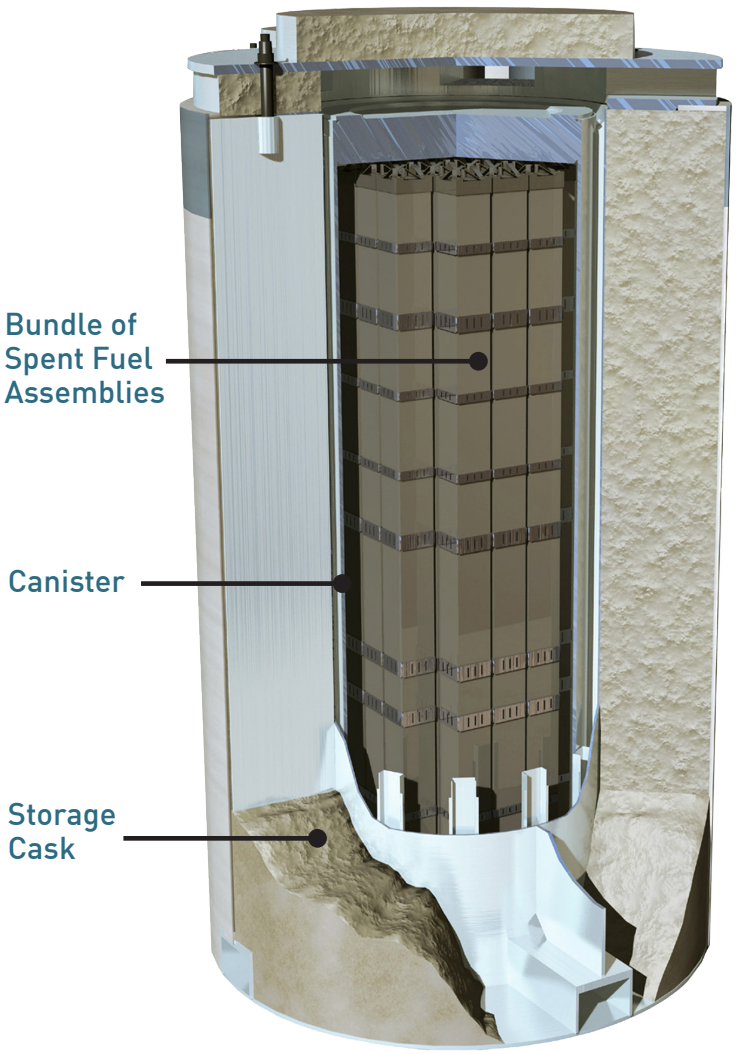

But just having a certificate does not mean a cask can be used. Both NRC and DOT regulations also require a number of safety determinations before each spent fuel shipment. These include checks for leaks and tests to ensure radiation levels are within safe limits. These actions are designed to ensure that all aspects of every spent fuel shipment meet all the safety standards.

A Brief History of Spent Fuel Shipments and Studies

More than 1,300 spent fuel shipments have been completed safely in the United States over the past 35 years. Four were involved in accidents, but none resulted in a release of radioactive material or a fatality due to radiation exposure.

This experience confirms that the safety system is sound. But will this hold true when shipments increase to move spent fuel to a future repository or a storage facility?

The NRC looks at the risks associated with spent fuel transport in a methodical and scientific way. Several NRC-sponsored studies over the years have focused on the risk related to spent fuel transport on highways and railroads. The results provide additional confidence in the current regulations to assure the safety of spent fuel transport.

NAC LWT spent fuel transport package is moved by crane. *(Courtesy: NAC International)*

In a 1977 study[1], the NRC found the risk from transporting spent fuel to be low. The study gave the NRC confidence that existing regulations are adequate to protect the public.

In separate studies in 1987[2] and 2000[3], the NRC looked more closely at how shipping containers would perform in accidents. Each study used more advanced research methods than in the earlier studies. Both of these studies found the risk posed by spent fuel shipments would be even smaller than estimated in 1977. That finding holds true even if the number of spent fuel shipments were to increase greatly.

The latest risk study, published in January 2014, modeled the radiation doses people might receive from spent fuel shipments. This study again confirmed that NRC regulations for spent fuel transport ensure safety of the public and the environment.

The 2014 study[4] looked at how three NRC-certified packages would behave during both normal shipments and transportation accidents. The study modeled a variety of transport routes using population data from the U.S. Census Bureau. It used statistics from actual highway and rail accidents and state-of-the-art computer models. The study considered doses from normal shipments to people living along transportation routes. It also looked at doses to occupants of vehicles sharing the route, vehicle crews and other workers, and anyone present at a stop.

1. *http://pbadupws.nrc.gov/docs/ML1219/ML12192A283.pdf*
2. *http://www.nrc.gov/reading-rm/doc-collections/nuregs/contract/cr4829/*
3. *http://pbadupws.nrc.gov/docs/ML0036/ML003698324.pdf*
4. *http://pbadupws.nrc.gov/docs/ML1403/ML14031A323.pdf*

Transportable spent fuel storage cask moves to storage pad.
(Courtesy: Holtec International)

The risk assessment found:

- **Doses from routine transport would be less than 1/1000 the amount of radiation people receive from background sources each year.**
- **There is less than a 1 in 1 billion chance that radioactive material would be released in an accident.**
- **If an accident did release radioactive material, the dose to the most affected individual would not cause immediate harm.**

In addition to these risk studies, the NRC has looked closely at real-world transportation accidents involving fires. The NRC did a series of case studies on the most severe accidents to see how well an NRC-certified spent fuel package would perform. These studies show the current regulations protect the public even in the most severe fires. The case studies include the Howard Street tunnel chemical fire that burned for five days in Baltimore in 2001; the 1982 Caldecott tunnel fire and the 2007 MacArthur Maze fire, both sparked by gasoline tankers outside Oakland, CA.; and a 2007 brush fire in the New Hall Pass tunnel outside Los Angeles.

Rail Cask

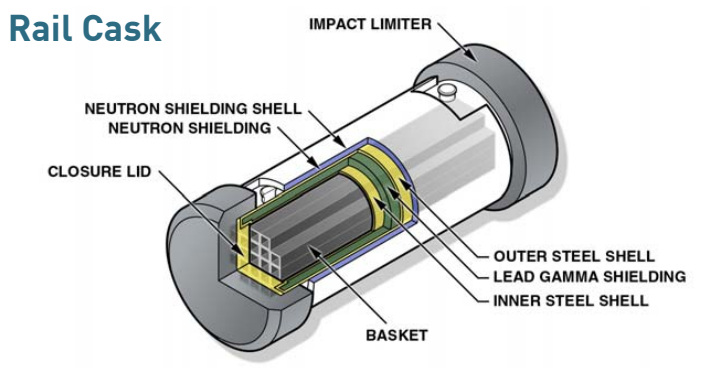

Truck Cask

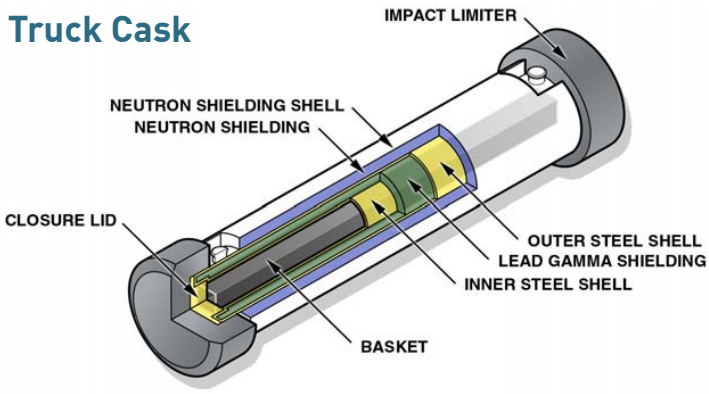

Spent fuel containers are specially designed to protect the public by withstanding accident conditions without releasing their radioactive contents.

Additional NRC studies identified the conditions in an accident that could produce a fire severe enough to engulf a spent fuel transport package.

On the basis of these studies, plus operational experience and its own reviews, the NRC believes spent fuel can continue to be shipped safely. The evidence shows this will be true even if hundreds of shipments are made each year. The NRC is continuing to track spent fuel shipping, including more analyses and testing of spent fuel casks, to ensure that the risks remain low.

Understanding the Risks

Risk is generally understood to be the chance of injury, damage or some kind of loss. The spent fuel shipment record in the United States has been outstanding to date. Many more shipments have been successfully completed internationally under the same basic safety standards.

While shipping spent fuel does involve risk, NRC studies show this risk is low. As a part of its safety effort, the NRC aims to manage the hazards to minimize the risk. To evaluate the risks, the NRC asks the following three questions and then converts the answers into numbers:

- **What can go wrong?**
- **How likely is it to occur?**
- **If something goes wrong, what are the consequences?**

The overwhelming majority of spent fuel shipments are accident-free. To calculate the radiation risks to the public, researchers use two scenarios. One involves a trip on which an accident occurs; the other covers the vast majority of journeys that do not involve an accident.

Researchers use a four-step process to study actual and potential accidents and their effects.

Step 1. Experts determine what might happen.

- *They gather historic records.*
- *They also put together data on how many spent fuel shipments are likely each year.*
- *They look at the rate of accidents for rail and highway shipments.*
- *They look at a large number of accidents that are credible.*
- *They also look at the effects of crash impact forces, fires, or punctures on the shipping container. They pick forces that are more severe than those covered by NRC standards.*

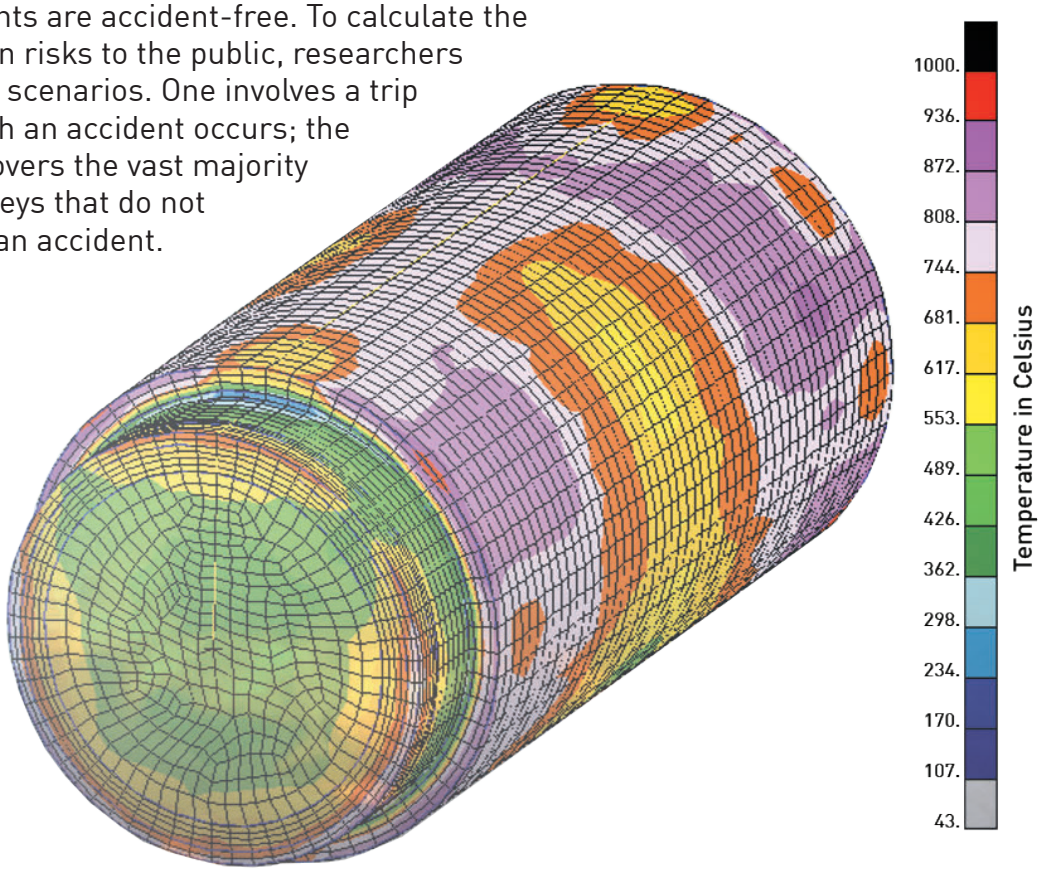

Shown is a computer simulation of the response of a cask to a severe fire environment. Analyses like this and tests are used by NRC to assure safe transportation of spent fuel.

Step 2. Engineers use complex computer programs to estimate how the parts of a shipping container might be damaged by collisions or fires.

- *They gather data on how much spent fuel each container will carry.*
- *They analyze how the spent fuel might respond in a given type of accident.*
- *They calculate the temperature of the container and the spent fuel itself during a long-term fire.*

This information allows engineers to estimate the size of a potential leak and how much nuclear material might escape.

Step 3. Researchers match accident scenarios from Step 1 with the analyses from Step 2. This tells them the likelihood that there would be severe damage to the container or its contents.

Step 4. A special computer program computes a risk estimate. The program takes accident probability estimates, expected numbers of shipments, route data (like population densities), weather data (to estimate how any release might be spread by wind), and radiological dose data to produce a risk estimatee.

The Accident Scenario

NRC studies show the likelihood of a radioactive release is very low. Fewer than 5 in 10,000 accidents involving a spent fuel container may be more severe than the conditions defined in the design standards. We would not expect a radioactive release in 99.99973% of those 5 accidents. However, if a very unlikely chain of events occurs, an accident might be severe enough to cause a release.

To estimate the risk of these severe accidents, researchers use a multi-step approach. They use data and their experience with past highway and rail accidents involving other hazardous materials. Part of this step is to determine what kinds of accidents could happen and look at what their effects might be.

Using this method, the chance that an accident would be serious enough to lead to a release is 1 in 1 billion. If an accident did release radioactive material, the dose to the most affected individual would not cause immediate harm.

The Accident-Free Scenario

For most spent fuel shipments, nothing will go wrong and no nuclear material will be released. For these shipments, experts calculate the total radiation dose that all people along the route could receive. They use information on routes and local populations to determine how many people may be affected and the dose they could receive.

The risk to the public from an accident-free journey results from the very low levels of radiation that may come through the cask walls. A person standing along the highway or railroad track might receive a brief exposure that is well below regulatory limits. Exposure will vary depending upon the speed of the vehicle and how far away the person is standing. Doses from routine transport would be less than 1/1000 the amount of radiation people receive from background sources each year.

The Bottom Line

The NRC believes that shipments of spent fuel in the United States are safe. This belief is based on the NRC's confidence in the shipping containers that it certifies and its ongoing research in transportation safety.

- **The NRC ensures that shipping containers are robust by:**
  - Defining strict requirements for package design and performance
  - Reviewing designs and independently checking a container's ability to meet accident conditions
  - Doing inspections to ensure casks are built, maintained and used properly
- **The NRC also looks at the risks involved in spent fuel shipments. The agency:**
  - Analyzes spent fuel transport records to fully understand potential safety issues
  - Evaluates new transportation issues, such as projections for the number of shipments, changes in population along some routes, and other factors
  - Keeps up with technology as it evolves to refine estimates of current and future risk to the public

There will always be a slight chance that an accident will cause a release of nuclear material. But the NRC has found the likelihood of such an event and the risk to the public to be extremely low. Even so, the NRC will continue to be vigilant about public safety as an essential part of its mission.

Spent Fuel Transport Security

The NRC also regulates how spent nuclear fuel is protected in transit against sabotage or theft. The agency strengthened these rules after Sept. 11, 2001. The current rules for the physical protection of spent fuel transport include:

- **Coordinating with law enforcement agencies before the shipment**
- **Requiring advance notice to States, Indian tribes, and the NRC**
- **Using a communications center and other means to monitor shipments while in route**
- **Using armed escorts, and**
- **Using devices that allow drivers and escorts to shut the vehicle off**

For Additional Information Contact:

Office of Public Affairs
U.S. Nuclear Regulatory Commission
Washington, D.C. 20555-0001
Phone: (301) 415-8200
Email: OPA@NRC.GOV
Internet Home Page: http://www.nrc.gov

U.S. Nuclear Regulatory Commission
NUREG/BR-0292, Rev. 1
August 2016

@NRCgov