REVISED RESPONSE TO REQUEST FOR ADDITIONAL INFORMATION

APR1400 Design Certification

Korea Electric Power Corporation / Korea Hydro & Nuclear Power Co., LTD

Docket No. 52-046

RAI No.:	**356-7881**
SRP Section:	**07 – Instrumentation and Controls – Overview of Review Process**
Application Section:	**7.0**
Date of RAI Issue:	**01/04/2016**

Question No. 07-5

Describe the I&C and its supporting features (e.g. location of equipment, power sources, etc.) for the remote control center (RCC) in the APR1400 design.

General Design Criteria (GDC) 19 requires, in part, that equipment at appropriate locations outside the control room shall be provided (1) with a design capability for prompt hot shutdown of the reactor, including necessary instrumentation and controls to maintain the unit in a safe condition during hot shutdown, and (2) with a potential capability for subsequent cold shutdown of the reactor through the use of suitable procedures.

Regarding the RCC, the applicant states in APR1400 FSAR Tier 2, Section 7.7.1.1, "Conrol Systems," subsection o.3)c), the RCC has minimum equipment necessary to maintain the plant for 24 hours to accomplish hot standby. The applicant also states that the RCC is located separately from the main control room (MCR) so that aircraft impact to the MCR does not adversely affect the RCC. The applicant goes on to state that the RCC panels have divisionalized control of safety and non-safety controls to achieve plant hot shutdown. In Section 7.7.1.2, "Main Control Room Facility," the applicant states the MCR and remote shutdown room (RSR) both meet the requirements of GDC 19, but makes no mention of the RCC. In Section 7.7.1, "Description," of FSAR Tier 2, the applicant states that the RSR is subject to the human factors engineering process described in Chapter 18 of the APR1400 FSAR Tier 2 but does not mention a similar design commitment for the RCC.

The applicant mentions that the RCC has safety and non-safety related controls available but does not state that RCC complies with any other applicable requirements for this configuration such as independence. The RCC is not depicted on Figure 7.1-1, “APR1400 I&C System Overview Architecture,” therefore, there is no physical depiction of how the functionality of the RCC is taken into account within the overall I&C architecture or how its implemented. The acronym for the remote control center is also not defined in the acronym and abbreviation list in Section 7.0 of FSAR Tier 2. It cannot be determined what the difference is between the RCC and RSR.

1. Describe the RCC including all instrumentation, controls, and displays available at the RCC, all communications and architectural details used to implement the RCC, how the RCC addresses all the applicable requirements to the RCC (i.e. Independence), the specific design functions the RCC is intended to meet, the locations of RCC equipment (i.e. I&C cabinets, if applicable).

2. What is the difference between the RCC and the RSR?

3. Have the controls and displays available at the RCC been designed using the human factors engineering process as described in Chapter 18?

Response – (Rev. 1)

1. The remote control center (RCC) is designed with the following design features:

   1) The RCC provides manual control and monitoring means to bring the plant to hot standby under accident conditions.

   2) The RCC is manipulated by one reactor operator who monitors and controls the plant.

   3) For control and monitoring, the RCC provides four divisionalized engineered safety features (ESF) component control system (CCS) soft control modules (ESCMs) for safety component control and process monitoring. Conventional hardwired switches, related indicators, and non-safety component control are also provided.

   4) The ESCMs and conventional switches in the RCC are physically separated from the MCR and RSR. These ESCMs are connected to the ESF-CCS loop controller (LC) in the remote multiplexer (MUX) room through a dedicated route which is separated from the routes of the main control room (MCR) and the remote shutdown room (RSR). The conventional switches are connected to the P-CCS cabinets in the remote MUX room through a dedicated route. This route also is separated from the routes of the MCR and the RSR.

   5) In normal conditions, the MCR/RCC transfer switch is in MCR mode and the signals from the control channel gateway (CCG) of the RCC are disconnected. When the MCR/RCC transfer switch is switched to the RCC mode, the signals from the CCG of the RCC are connected to the ESF-CCS LC and the signals from CCG of the MCR are disconnected.

   6) No single credible event that would require the concurrent evacuation of the MCR and the RSR (or fire damage in the MCR and RSR) would make the RCC inoperable.

   7) The ESF-CCS LCs and P-CCS LCs that are related with plant hot shutdown are interfaced with the RCC panel.

   8) MCR/RCC transfer switches are located in the MCR. MCR/RCC transfer switches are provided for safety division A, B, C, D, and the non-safety division. One transfer switch is provided for each division of ESF-CCS LC and each division of P-CCS LC, respectively. These transfer switches disconnect signal paths between the ESCMs in the MCR and the RSR and ESF-CCS LC in the remote MUX room.

9) The RCC panel room is located on the opposite side of the plant from the MCR and the RSR so that an aircraft impact cannot affect the MCR, RSR, and the RCC panel.

10) The ESCMs on the RCC are seismically and environmentally qualified as class 1E.

11) The ESCMs on the RCC have same design features as those on the MCR and the RSR. The ESCMs are verified to meet independence, physical separation, and EMI/RFI requirements as described in DCD Tier 1, Section 2.5.4.1, Items 2 and 16 and as detailed in the corresponding ITAAC.

2. The RSR is designed to achieve safe shutdown outside of the MCR in the unlikely event that the MCR becomes uninhabitable, in conformance with GDC 19. Displays and controls on the remote shutdown console in the RSR are the same type as those on the consoles of the MCR.

   The RCC panel is designed as a supplemental facility to accommodate the aircraft impact event. This panel is to provide manual control and monitoring means to bring the plant to hot shutdown in the unlikely event of an aircraft impact. The RCC panel is designed as non-safety class.

3. The controls and displays available at the RCC have been designed according to the guidelines in NUREG-0700, “Human-System Interface Design Review Guidelines.” The RCC has not been specifically described in Chapter 18; however, design of the RCC will follow the NUREG-0711, human factors engineering process as a local control station facility.

DCD Tier 2, Section 7.0, Section 7.7.1.1, Figure 7.1-1, APR1400-Z-J-NR-14001-P/NP, Rev. 0, “Safety I&C System,” Figure 4-1, and APR1400-Z-J-NR-14002-P/NP, Rev. 0, “Diversity and Defense in Depth,” Figure 4-1 will be revised. The depiction of the I&C architecture of the RCC will be added as Figure 7.7-14. DCD Tier 1, Section 2.5.4.1 will be revised to show that the ESCMs on the MCR, RSR, and RCC have same design features, as indicated in the attachment associated with this response.

Impact on DCD

DCD Tier 1, Section 2.5.4.1 and Table 2.5.4-4, DCD Tier 2, Sections 7.0, 7.7.1.1, and Figure 7.1-1 will be revised, and Figure 7.7-14 will be added, as indicated in the attachment associated with this response.

Impact on PRA

There is no impact on the PRA.

Impact on Technical Specifications

There is no impact on the Technical Specifications.

Impact on Technical/Topical/Environmental Reports

APR1400-Z-J-NR-14001-P/NP, Rev. 0, “Safety I&C System,” Figure 4-1, and APR1400-Z-J-NR-14002-P/NP, Rev. 0, “Diversity and Defense in Depth,” Figure 4-1 will be revised as indicated in the attachment associated with this response.

RAI 356-7881 - Question 07-5_Rev.1

2.5.4 Engineered Safety Features-Component Control System

2.5.4.1 Design Description

The engineered safety features (ESF) system consists of sensors, auxiliary process cabinet-safety (APC-S), the engineered safety features actuation system (ESFAS) portion of the plant protection system (PPS) and engineered safety features-component control system (ESF-CCS). The sensors, APC-S and the ESFAS portion of the PPS are described in Subsection 2.5.1. Subsection 2.5.4 describes the ESF-CCS.

The ESF-CCS provides automatic actuation of ESF systems. The ESF-CCS performs the nuclear steam supply system (NSSS) ESFAS function, balance of plant (BOP) ESFAS function, and emergency diesel generator (EDG) loading sequencer function.

The ESF-CCS generates the NSSS ESF actuation signals upon receipt of ESFAS initiation signals from the PPS. The ESF-CCS generates the BOP ESF actuation signals upon receipt of initiation signals from the process and effluent radiation monitoring system (RMS).

The ESF-CCS generates the EDG loading sequencer signals upon receipt of loss of power to Class 1E train buses, safety injection actuation signal (SIAS), containment spray actuation signal (CSAS), and auxiliary feedwater actuation signal (AFAS).

The ESF-CCS provides the capability for manual actuation of ESF systems and manual control of ESF components.

The ESF-CCS consists of four divisions of group controller cabinets and loop controller cabinets. The ESF-CCS equipment and manual control components are identified in Table 2.5.4-1. The ESF-CCS components are located in auxiliary building.

The ESF-CCS design incorporates the following features: processors arranged in primary and standby processor configurations within each ESF-CCS division. ESFAS functions are divided into the ESF-CCS distributed segments which receive the ESF actuation signals from the PPS through the fiber optic cable. Separation is provided between protection ESFAS processing function and auxiliary functions of human-system interfaces, data communication and automatic testing. Serial data link support the transmission of protection data on a continuous cyclical basis independent of plant transients.

The ESF-CCS soft control modules are provided in the main control room (MCR), remote shutdown room (RSR), and remote control center (RCC).

RAI 356-7881 - Question 07-5_Rev.1

1. The seismic Category I equipment and components identified in Table 2.5.4-1 withstand seismic design basis loads without loss of the safety function.

2. Redundant Class 1E divisions listed in Table 2.5.4-1 and associated field equipment are physically separated and electrically isolated from each other and physically separated and electrically isolated from non-Class 1E equipment.

3. The Class 1E equipment and components identified in Table 2.5.4-1 are powered from its respective Class 1E train.

4. Each ESF-CCS division receives ESFAS initiation signals from four divisions of the PPS and performs selective 2-out-of-4 coincidence logic to perform NSSS ESF actuation functions identified in Table 2.5.4-2.

5. Each ESF-CCS division receives ESFAS initiation signals from two divisions of the RMS as shown in Tables 2.7.6.4-2 and 2.7.6.5-2 and performs 1-out-of-2 logic taken twice except the fuel handling area emergency ventilation actuation signal which has one 1-out-of-2 logic to perform the BOP ESF actuation functions identified in Table 2.5.4-2.

6. Upon receipt of a SIAS, CSAS, or AFAS, the ESF-CCS initiates an automatic start of the EDGs and automatic EDG loading sequencer of ESF loads identified in Table 2.5.4-2.

7. Upon detecting loss of power to Class 1E buses, the ESF-CCS initiates startup of the EDGs, shedding of electrical loads, transfer of Class 1E bus connections to the EDGs, and EDG loading sequencer to the reloading of safety-related loads to the Class 1E buses.

or either the MCR or RCC

8. Each ESF-CCS division is controlled from either the MCR or RSR, as selected from MCR/RSR master transfer switches.

or MCR/RCC

9. Once a BOP ESF actuation has been actuated (automatically or manually), the ESF actuation logic is latched in the actuated state and is not reset automatically

RAI 317-8271 - Question 14.03.05-22_Rev.1

RAI 356-7881 - Question 07-5_Rev.1

Table 2.5.4-4 (3 of 7)

Design Commitment	Inspections, Tests, Analyses	Acceptance Criteria
5. Each ESF-CCS division receives ESFAS initiation signals from two divisions of the RMS as shown in Tables 2.7.6.4-2 and 2.7.6.5-2 and performs 1-out-of-2 logic taken twice except the fuel handling area emergency ventilation actuation signal which has one 1-out-of-2 logic to perform the BOP ESF actuation functions identified in Table 2.5.4-2.	5. A test will be performed using simulated input signals for initiation input to each division of the as-built ESF-CCS.	5. Each ESF-CCS division receives ESFAS initiation signals from two divisions of the RMS, performs 1-out-of-2 logic taken twice except the fuel handling area emergency ventilation actuation signal which has one 1-out-of-2 logic for each BOP ESF actuation function identified in Table 2.5.4-2 and sends the control signals to the ESF components.
6. Upon receipt of a SIAS, CSAS, or AFAS, the ESF-CCS initiates an automatic start of the EDGs and automatic EDG loading sequencer of ESF loads identified in Table 2.5.4-2.	6. A test will be performed using simulated input signals for initiation input to each division of the as-built ESF-CCS.	6. Each ESF-CCS division receives a SIAS, CSAS, or AFAS and initiate an automatic start of the EDGs and automatic loading sequencer of ESF loads identified in Table 2.5.4-2.
7. Upon detecting loss of power to Class 1E buses, the ESF-CCS initiates startup of the EDGs, shedding of electrical loads, transfer of Class 1E bus connections to the EDGs, and EDG loading sequencer to the reloading of safety-related loads to the Class 1E buses.	7. A test will be performed using simulated input signals for initiation input to each division of the as-built ESF-CCS.	7. Each ESF-CCS division receives loss of power to Class 1E buses, and initiate an automatic start of the EDGs, shedding of electrical loads, transfer of Class 1E bus connections to the EDGs, and sequencing to the reloading of safety-related loads to the Class 1E buses.
8. Each ESF-CCS division is controlled from either the MCR or RSR, as selected from MCR/RSR master transfer switches.	8. A test of the as-built ~~system for one control within each~~ ESF-CCS ~~division~~ will be performed to demonstrate the transfer ~~of~~ control ~~capability~~ between the MCR and RSR.	8. The as-built master transfer switches transfer controls between the MCR and RSR separately for each as-built ESF-CCS division, as follows: a. Controls in the RSR are disabled when controls are active in the MCR. b. Controls in the MCR are disabled when controls are active in the RSR.

or either the MCR or RCC

or MCR/RCC

or between the MCR and RCC

or between the MCR and RCC

and

function

and the RSR controls the ESF-CCS division

and the MCR controls the ESF-CCS division

c. Controls in the RCC are disabled when controls are active in the MCR and the MCR controls the ESF-CCS division.
d. Controls in the MCR are disabled when controls are active in the RCC and the RCC controls the ESF-CCS division.

Figure 7.7-6 Steam Bypass Control System Block Diagram 7.7-47
Figure 7.7-7 Simplified Block Diagram Reactor Power Cutback System 7.7-48
Figure 7.7-8 Process-Component Control System Simplified Block Diagram 7.7-49
Figure 7.7-9 Core Operating Limit Supervisory System Functional Diagram 7.7-50
Figure 7.7-10 Ex-Core Neutron Flux Monitoring System Startup and Control Channel Flow Diagram 7.7-51
Figure 7.7-11 N-16 Detection and Alarm Logic 7.7-52
Figure 7.7-12 HSI Information Processing Block Diagram 7.7-53
Figure 7.7-13 Layout of Main Control Room 7.7-54
Figure 7.8-1 Diverse Protection System Block Diagram 7.8-21
Figure 7.8-2 Diverse Reactor Trip, Turbine Trip, AFWS and SIS Actuation 7.8-22
Figure 7.8-3 Diverse Reactor Trip and Turbine Trip 7.8-23
Figure 7.8-4 Diverse AFWS Actuation 7.8-24
Figure 7.8-5 Diverse SIS Actuation 7.8-25
Figure 7.8-6 DMA Switches Block Diagram 7.8-26
Figure 7.9-1 Data Communication Block Diagram 7.9-16
Figure 7.7-14 I&C System Architecture for the RCC Panel

NA	not applicable
NIMS	NSSS integrity monitoring system
NPCS	NSSS process control system
NRC	Nuclear Regulatory Commission
NSSS	nuclear steam supply system
OM	operator module
OSC	operational support center
P&ID	piping and instrumentation diagram
PA	postulated accident
PC	personal computer
P-CCS	process-component control system
PCS	power control system
PF	penalty factor
PLC	programmable logic controller
PLCS	pressurizer level control system
PM	processor module
POSRV	pilot operated safety relief valve
PPCS	pressurizer pressure control system
PPS	plant protection system
PRV	process representative value
PS	processing section
PSCEA	part-strength CEA
PZR	pressurizer
QA	quality assurance
QAPD	quality assurance program description
QIAS	qualified indication and alarm system
QIAS-N	qualified indication and alarm system – non-safety
QIAS-P	qualified indication and alarm system – P
RAM	random access memory
RCC	remote control ~~console~~ center

the sump provides an alarm in the MCR to alert the operator of the presence of water in that area.

b) Hydrogen mitigation system

The HMS allows adiabatic, controlled burning of hydrogen at low concentrations during degraded core accident conditions. Divisionalized HMS igniters are manually actuated from the MCR.

The HMS controls and instrumentation are described in Subsection 6.2.5. Electrical power distribution is described in Section 8.3.

c) Remote control center

The RCC is designed against aircraft impact to meet the requirements of 10 CFR 50.150 (Reference 11). The minimum equipment needed to maintain the reactor for 24 hours is provided to accomplish hot standby plant condition. The operator can shut down the reactor from the MCR 10 minutes before aircraft impact upon the MCR in the auxiliary building, and the control and monitoring is transferred to the RCC using a transfer switch located in the MCR. The RCC is located separately from the MCR so that aircraft impact to the MCR does not adversely affect the RCC operation integrity.

The RCC panel consists of divisionalized safety control and non-safety controls to achieve plant hot shutdown. The signals from the RCC are routed from the RCC to the I&C equipment room as well as to the motor control center (MCC) through multiplexers.

Insert "A" on following page

7.7.1.2 Main Control Room Facility

The MCR facilities are composed of the following major functional units:

a. The MCR includes the MCR operator consoles, a large display panel (LDP), safety console, and an adjacent meeting room.

b. The computer room contains the IPS that monitors plant performance, drives various display units, and logs plant data.

The remote control center (RCC) is designed with the following design features:

- The RCC provides manual control and monitoring means to bring the plant to hot standby under accident conditions.
- The RCC is manipulated by one reactor operator who monitors and controls the plant.
- For control and monitoring, the RCC provides four divisionalized engineered safety features (ESF) component control system (CCS) soft control modules (ESCMs) for safety component control and process monitoring. Conventional hardwired switches, related indicators, and non-safety component control are also provided.
- The ESCMs and conventional switches in the RCC are physically separated from the MCR and RSR. These ESCMs are connected to the ESF-CCS loop controller (LC) in the remote multiplexer (MUX) room through a dedicated route which is separated from the routes of the main control room (MCR) and the remote shutdown room (RSR). The conventional switches are connected to the P-CCS cabinets in the remote MUX room through a dedicated route. This route also is separated from the routes of the MCR and the RSR.
- In normal conditions, the MCR/RCC transfer switch is in MCR mode and the signals from the control channel gateway (CCG) of the RCC are disconnected. When the MCR/RCC transfer switch is switched to the RCC mode, the signals from the CCG of the RCC are connected to the ESF-CCS LC and the signals from CCG of the MCR are disconnected.
- No single credible event that would require the concurrent evacuation of the MCR and the RSR (or fire damage in the MCR and RSR) would make the RCC inoperable.
- The ESF-CCS LCs and P-CCS LCs that are related with plant hot shutdown are interfaced with the RCC panel.
- MCR/RCC transfer switches are located in the MCR. MCR/RCC transfer switches are provided for safety division A, B, C, D, and the non-safety division. One transfer switch is provided for each division of ESF-CCS LC and each division of P-CCS LC, respectively. These transfer switches disconnect signal paths between the ESCMs in the MCR and the RSR and ESF-CCS LC in the remote MUX room.
- The RCC panel room is located on the opposite side of the plant from the MCR and the RSR so that an aircraft impact cannot affect the MCR, RSR, and the RCC panel.
- The ESCMs on the RCC are seismically and environmentally qualified as class 1E.
- The ESCMs on the RCC have same design features as those on the MCR and the RSR. The ESCMs are verified to meet independence, physical separation, and EMI/RFI requirements as described in DCD Tier 1, Section 2.5.4.1, Items 2 and 16 and as detailed in the corresponding ITAAC.

The I&C system architecture for the RCC panel is shown in Figure 7.7-14.

"A"

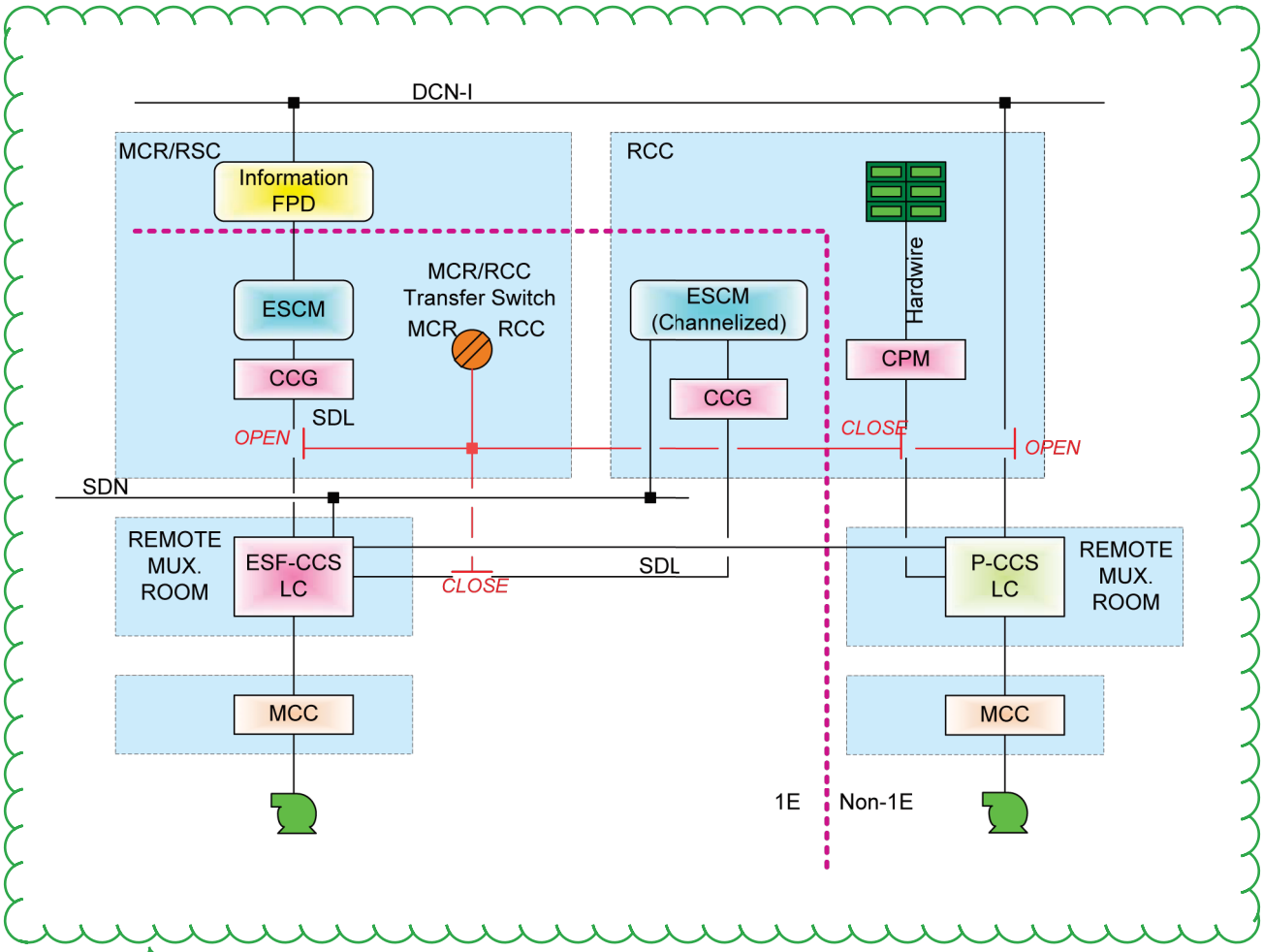

Figure 7.7-14 I&C System Architecture for the RCC Panel

Replace with “B” on following page

RAI 356-7881 - Question 07-5_Rev.1

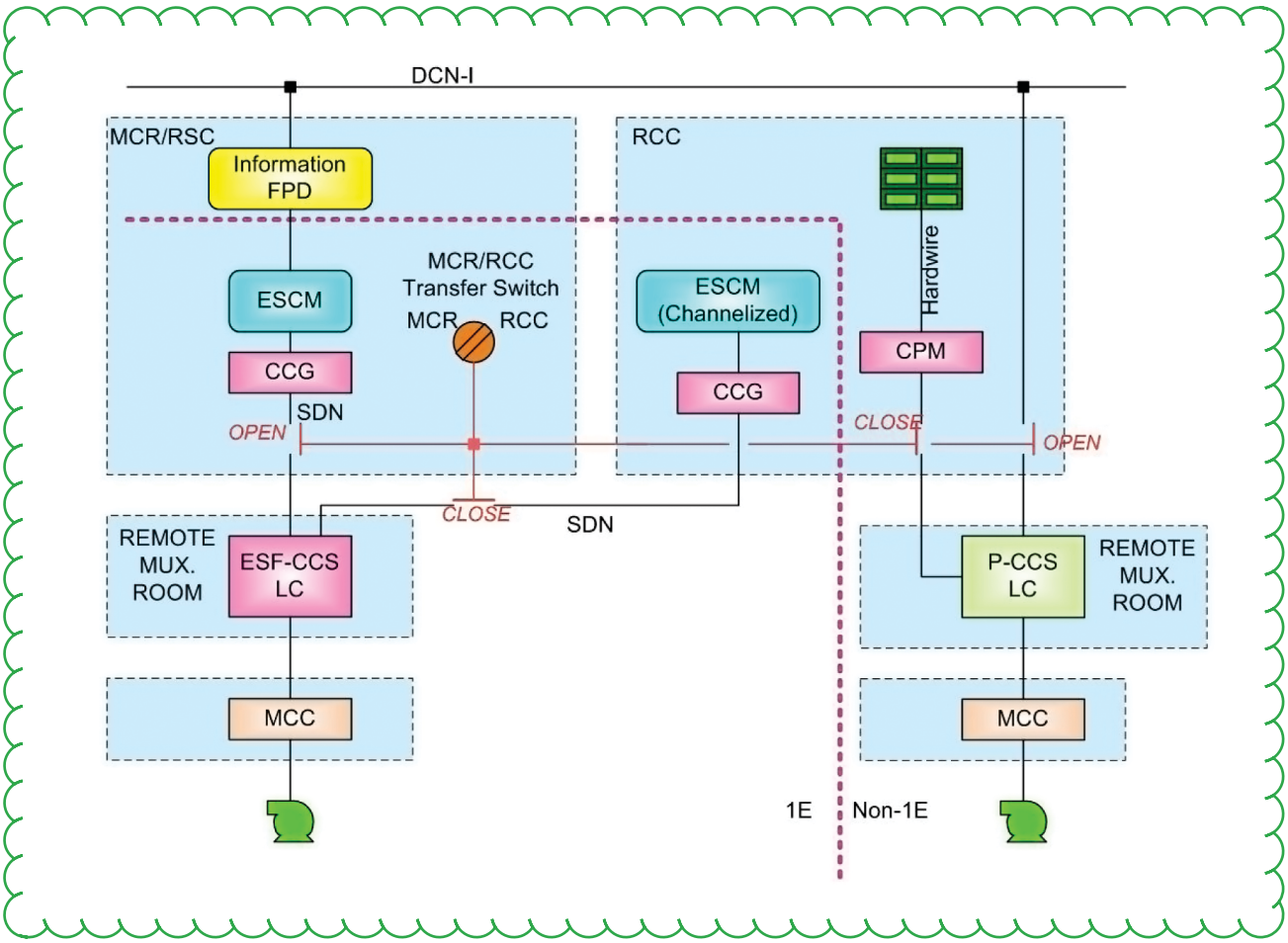

"B"

APR1400 DCD TIER 2

System-Level MI

Component-Level MI

Added

Add

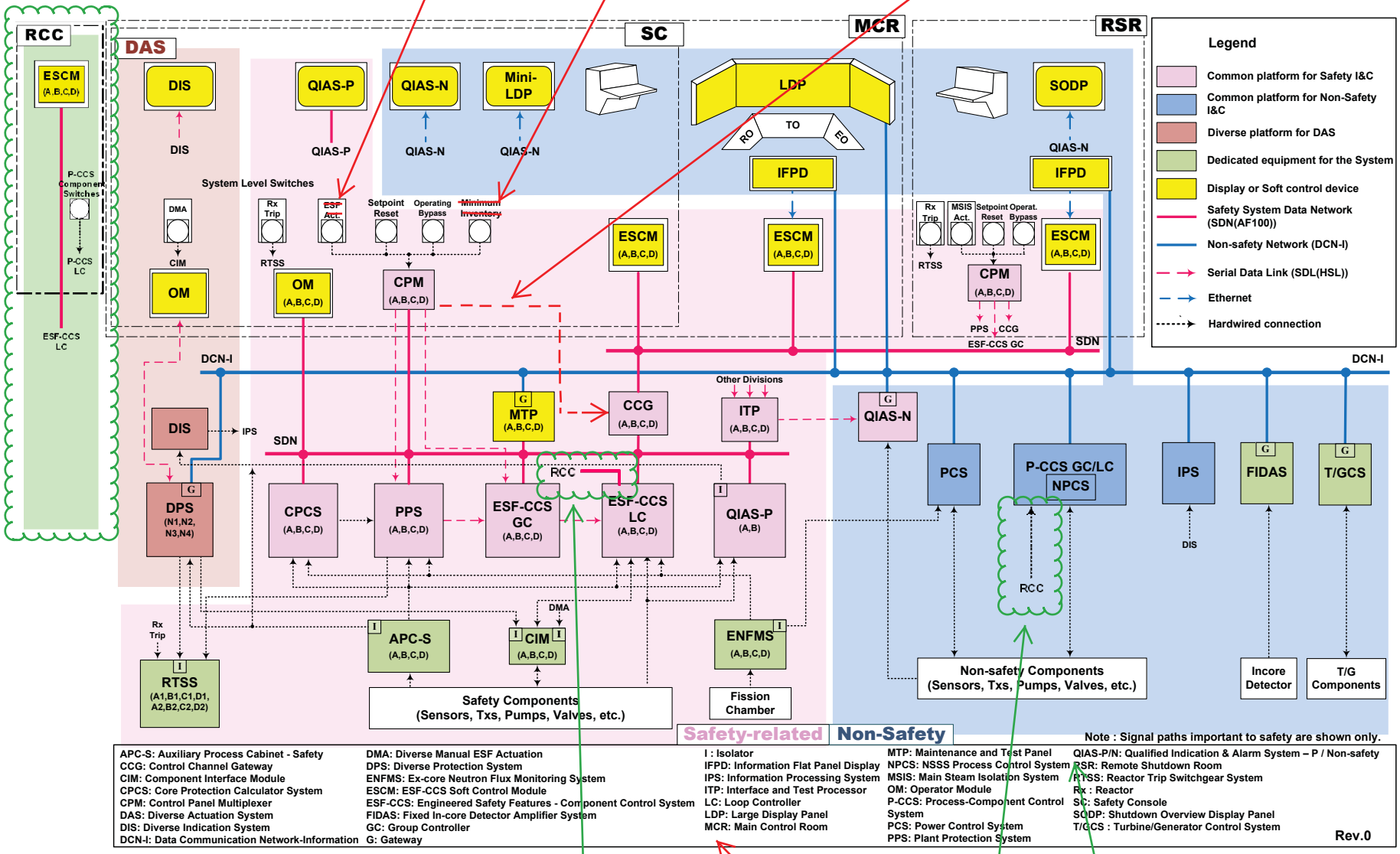

Figure 7.1-1 APR1400 I&C System Overview Architecture

Add

MI : Minimum Inventory

Add

RCC : Remote Control Center

RAI 356-7881 - Question 07-5_Rev.1

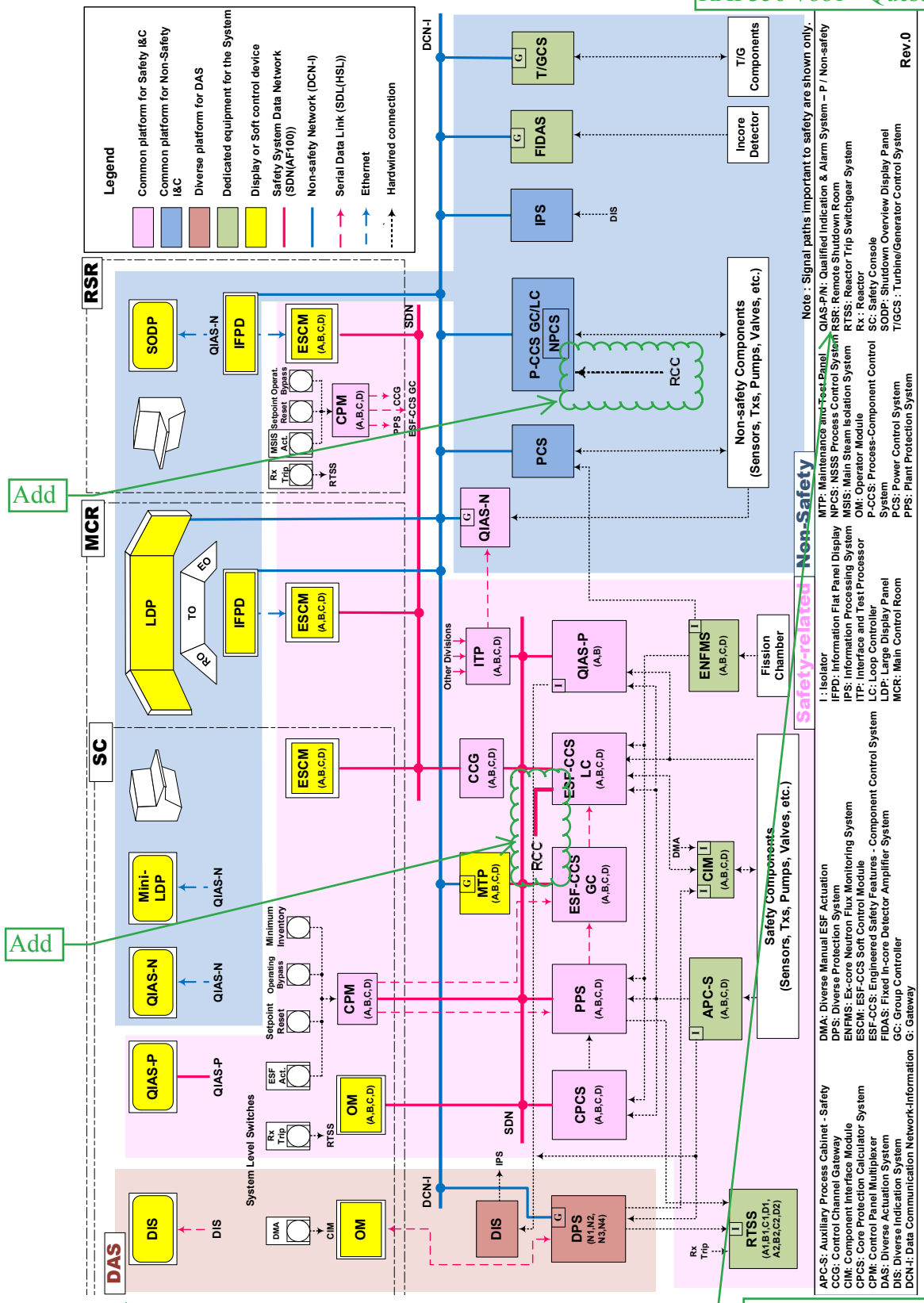

Figure 4-1 APR1400 I&C System Overview Architecture

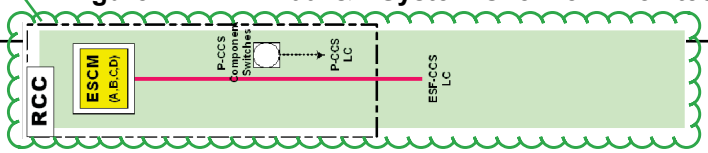

Add

RAI 356-7881 - Question 07-5_Rev.1

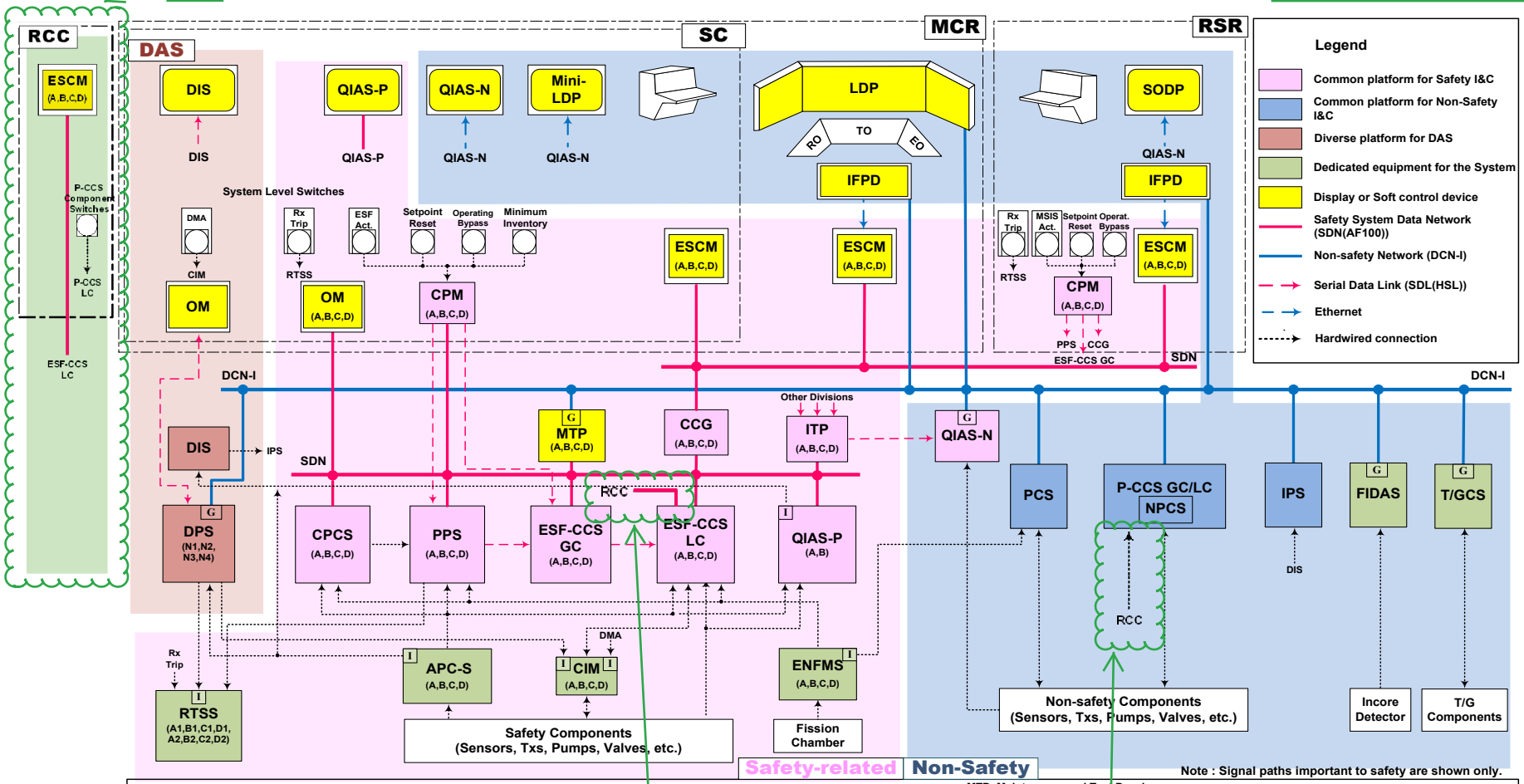

Add

Add

RCC : Remote Control Center

Figure 4-1 Architecture Overview of the APR1400 I&C Systems