U.S.NRC
United States Nuclear Regulatory Commission
Protecting People and the Environment

NUREG-2189

Safety Evaluation Report

Related to SHINE Medical Technologies, Inc. Construction Permit Application for a Medical Radioisotope Production Facility

Docket Number 50-608

Office of Nuclear Reactor Regulation

AVAILABILITY OF REFERENCE MATERIALS IN NRC PUBLICATIONS

NRC Reference Material

As of November 1999, you may electronically access NUREG-series publications and other NRC records at NRC's Library at www.nrc.gov/reading-rm.html. Publicly released records include, to name a few, NUREG-series publications; *Federal Register* notices; applicant, licensee, and vendor documents and correspondence; NRC correspondence and internal memoranda; bulletins and information notices; inspection and investigative reports; licensee event reports; and Commission papers and their attachments.

NRC publications in the NUREG series, NRC regulations, and Title 10, "Energy," in the *Code of Federal Regulations* may also be purchased from one of these two sources.

1. **The Superintendent of Documents**
   U.S. Government Publishing Office
   Mail Stop IDCC
   Washington, DC 20402-0001
   Internet: bookstore.gpo.gov
   Telephone: (202) 512-1800
   Fax: (202) 512-2104

2. **The National Technical Information Service**
   5301 Shawnee Rd., Alexandria, VA 22312-0002
   www.ntis.gov
   1-800-553-6847 or, locally, (703) 605-6000

A single copy of each NRC draft report for comment is available free, to the extent of supply, upon written request as follows:

Address: **U.S. Nuclear Regulatory Commission**
Office of Administration
Publications Branch
Washington, DC 20555-0001
E-mail: distribution.resource@nrc.gov
Facsimile: (301) 415-2289

Some publications in the NUREG series that are posted at NRC's Web site address www.nrc.gov/reading-rm/doc-collections/nuregs are updated periodically and may differ from the last printed version. Although references to material found on a Web site bear the date the material was accessed, the material available on the date cited may subsequently be removed from the site.

Non-NRC Reference Material

Documents available from public and special technical libraries include all open literature items, such as books, journal articles, transactions, *Federal Register* notices, Federal and State legislation, and congressional reports. Such documents as theses, dissertations, foreign reports and translations, and non-NRC conference proceedings may be purchased from their sponsoring organization.

Copies of industry codes and standards used in a substantive manner in the NRC regulatory process are maintained at—

The NRC Technical Library
Two White Flint North
11545 Rockville Pike
Rockville, MD 20852-2738

These standards are available in the library for reference use by the public. Codes and standards are usually copyrighted and may be purchased from the originating organization or, if they are American National Standards, from—

American National Standards Institute
11 West 42nd Street
New York, NY 10036-8002
www.ansi.org
(212) 642-4900

Legally binding regulatory requirements are stated only in laws; NRC regulations; licenses, including technical specifications; or orders, not in NUREG-series publications. The views expressed in contractorprepared publications in this series are not necessarily those of the NRC.

The NUREG series comprises (1) technical and administrative reports and books prepared by the staff (NUREG–XXXX) or agency contractors (NUREG/CR–XXXX), (2) proceedings of conferences (NUREG/CP–XXXX), (3) reports resulting from international agreements (NUREG/IA–XXXX), (4) brochures (NUREG/BR–XXXX), and (5) compilations of legal decisions and orders of the Commission and Atomic and Safety Licensing Boards and of Directors' decisions under Section 2.206 of NRC's regulations (NUREG–0750).

DISCLAIMER: This report was prepared as an account of work sponsored by an agency of the U.S. Government. Neither the U.S. Government nor any agency thereof, nor any employee, makes any warranty, expressed or implied, or assumes any legal liability or responsibility for any third party's use, or the results of such use, of any information, apparatus, product, or process disclosed in this publication, or represents that its use by such third party would not infringe privately owned rights.

United States Nuclear Regulatory Commission

Protecting People and the Environment

NUREG-2189

Safety Evaluation Report

Related to SHINE Medical Technologies, Inc. Construction Permit Application for a Medical Radioisotope Production Facility

Docket Number 50-608

Manuscript Completed: October 2015
Date Published: August 2016

Office of Nuclear Reactor Regulation

ABSTRACT

This safety evaluation report (SER) documents the U.S Nuclear Regulatory Commission (NRC) staff's technical review of the construction permit application submitted by SHINE Medical Technologies, Inc. (SHINE or the applicant) for a medical radioisotope production facility to be located in Janesville, Wisconsin. The proposed facility would comprise an irradiation facility (IF) and radioisotope production facility (RPF) for the irradiation and processing of special nuclear material to produce medical radioisotopes, such as molybdenum-99. The IF would consist of eight subcritical operating assemblies (or irradiation units [IUs]), which would each be licensed as utilization facilities as defined in Title 10 of the *Code of Federal Regulations* (10 CFR) 50.2, "Definitions." The RPF would consist of three hot cell structures, licensed collectively as a production facility, as defined in 10 CFR 50.2. In this SER, the IF and RPF are collectively referred to as the SHINE facility.

The staff's environmental review of the SHINE construction permit application is documented in NUREG-2183, "Final Environmental Impact Statement for the Construction Permit for the SHINE Medical Radioisotope Production Facility." A record of decision will be published at a future date concerning the proposed issuance of the construction permit.

This SER presents the results of the staff's review of the SHINE construction permit application, as supplemented by the applicant's responses to requests for additional information (RAIs), and as updated on August 27, 2015.

The NRC's Advisory Committee on Reactor Safeguards (ACRS) independently reviewed those aspects of the application that concern safety and provided the results of its review to the Commission in a report dated October 15, 2015. Appendix D, "Report by the Advisory Committee on Reactor Safeguards," to this SER includes a copy of the report by the ACRS on the SHINE construction permit application.

Based upon the review documented in the SER, the staff finds that the preliminary design and analysis of the SHINE IF and RPF, including the principal design criteria; design bases; information relative to materials of construction, general arrangement, and approximate dimensions; and preliminary analysis and evaluation of the design and performance of structures, systems, and components (SSCs) of the facility, as described in the SHINE preliminary safety analysis report, and as supplemented by responses to RAIs: (1) provides reasonable assurance that the final design will conform to the design basis; (2) includes an adequate margin of safety; (3) SSCs adequately provide for the prevention of accidents and the mitigation of consequences of accidents; and (4) meets applicable regulatory requirements as well as NRC guidance. Therefore, the staff recommends that the Commission make the necessary findings with respect to the safety of the construction permit in accordance with 10 CFR 50.35, "Issuance of construction permits"; 50.40, "Common standards"; and 50.50, "Issuance of licenses and construction permits."

CONTENTS

ABSTRACT iii

CONTENTS v

FIGURES xiii

TABLES xiii

ABBREVIATIONS AND ACRONYMS xv

1.0 THE FACILITY 1-1

1.1 Introduction 1-1
1.1.1 Areas of Review 1-2
1.1.2 Regulatory Basis and Acceptance Criteria 1-3
1.1.3 Review Procedures 1-6
1.1.4 Resolving Technical Issues 1-7
1.1.5 Ongoing Research and Development 1-8
1.1.6 Advisory Committee on Reactor Safeguards Review 1-8
1.1.7 Application Availability 1-9
1.1.8 NRC Staff Contact Information 1-9
1.2 Summary and Conclusions on Principal Safety Considerations 1-9
1.3 General Description 1-12
1.4 Shared Facilities and Equipment 1-13
1.5 Comparison with Similar Facilities 1-14
1.6 Summary of Operations 1-19
1.7 Compliance with the Nuclear Waste Policy Act of 1982 1-20
1.8 Facility Modifications and History 1-21

2.0 SITE CHARACTERISTICS 2-1

2.1 Areas of Review 2-1
2.2 Summary of Application 2-2
2.3 Regulatory Basis and Acceptance Criteria 2-8
2.3.1 Applicable Regulatory Requirements 2-9
2.3.2 Regulatory Guidance and Acceptance Criteria 2-9
2.4 Review Procedures, Technical Evaluation, and Evaluation Findings 2-10
2.4.1 Geography and Demography 2-10
2.4.2 Nearby Industrial, Transportation, and Military Facilities 2-11
2.4.3 Meteorology 2-15
2.4.4 Hydrology 2-16
2.4.5 Geology, Seismology, and Geotechnical Engineering 2-20
2.5 Summary and Conclusions 2-23

3.0 DESIGN OF STRUCTURES, SYSTEMS, AND COMPONENTS 3-1

3.1 Areas of Review 3-1
3.2 Summary of Application 3-2
3.3 Regulatory Basis and Acceptance Criteria 3-2
3.3.1 Applicable Regulatory Requirements 3-4
3.3.2 Regulatory Guidance and Acceptance Criteria 3-4
3.4 Review Procedures, Technical Evaluation, and Evaluation Findings 3-5
3.4.1 Design Criteria 3-5

3.4.2 Meteorological Damage 3-7
3.4.3 Water Damage 3-8
3.4.4 Seismic Damage 3-9
3.4.5 Systems and Components 3-17
3.5 Summary and Conclusions 3-32

4.0 IRRADIATION UNITS AND RADIOISOTOPE PRODUCTION FACILITY DESCRIPTION 4-1

4a Irradiation Unit 4-1
4a.1 Areas of Review 4-1
4a.2 Summary of Application 4-2
4a.3 Regulatory Basis and Acceptance Criteria 4-2
4a.3.1 Applicable Regulatory Requirements 4-3
4a.3.2 Regulatory Guidance and Acceptance Criteria 4-3
4a.4 Review Procedures, Technical Evaluation, and Evaluation Findings 4-4
4a.4.1 Summary Description 4-5
4a.4.2 Subcritical Assembly 4-5
4a.4.3 Target Solution 4-5
4a.4.4 Reactivity Control Mechanisms 4-9
4a.4.5 Solid Neutron Moderator and Reflector 4-10
4a.4.6 Subcritical Multiplication Source 4-10
4a.4.7 Subcritical Assembly Support Structures 4-11
4a.4.8 Neutron Multiplier 4-12
4a.4.9 Neutron Driver 4-12
4a.4.10 Target Solution Vessel and Light Water Pool 4-14
4a.4.11 Irradiation Facility Biological Shield 4-16
4a.4.12 Nuclear Design 4-17
4a.4.13 Thermal-Hydraulic Design 4-23
4a.4.14 Gas Management System 4-27
4a.4.15 Probable Subjects of Technical Specifications 4-30
4a.5 Summary and Conclusions 4-30
4b Radioisotope Production Facility 4-31
4b.1 Areas of Review 4-31
4b.2 Summary of Application 4-32
4b.3 Regulatory Basis and Acceptance Criteria 4-32
4b.4 Review Procedures, Technical Evaluation, and Evaluation Findings 4-32
4b.4.1 Facility and Process Description 4-32
4b.4.2 Radioisotope Production Facility Biological Shield 4-34
4b.4.3 Radioisotope Extraction System 4-35
4b.4.4 Special Nuclear Material Processing and Storage 4-36
4b.4.5 Processing of Unirradiated Special Nuclear Material 4-38
4b.5 Summary and Conclusions 4-39

5.0 COOLING SYSTEMS 5-1

5a Irradiation Unit Cooling Systems 5-1
5a.1 Areas of Review 5-1
5a.2 Summary of Application 5-2
5a.3 Regulatory Basis and Acceptance Criteria 5-3
5a.3.1 Applicable Regulatory Requirements 5-4

5a.3.2 Regulatory Guidance and Acceptance Criteria 5-4
5a.4 Review Procedures, Technical Evaluation, and Evaluation Findings 5-5
5a.4.1 Summary Description 5-6
5a.4.2 Primary Cooling System 5-6
5a.4.3 Secondary Cooling System 5-9
5a.4.4 Primary Coolant Cleanup 5-10
5a.4.5 Primary Coolant Makeup Water System 5-11
5a.4.6 Nitrogen-16 Control 5-11
5a.4.7 Auxiliary Systems Using Primary Coolant 5-12
5a.4.8 Probable Subjects of Technical Specifications 5-12
5a.5 Summary and Conclusions 5-13
5b Radioisotope Production Facility Cooling Systems 5-14
5b.1 Areas of Review 5-14
5b.2 Summary of Application 5-14
5b.3 Regulatory Basis and Acceptance Criteria 5-14
5b.4 Review Procedures, Technical Evaluation, and Evaluation Findings 5-14
5b.5 Summary and Conclusions 5-14

6.0 ENGINEERED SAFETY FEATURES 6-1

6a Irradiation Facility Engineered Safety Features 6-1
6a.1 Areas of Review 6-1
6a.2 Summary of Application 6-2
6a.3 Regulatory Basis and Acceptance Criteria 6-2
6a.3.1 Applicable Regulatory Requirements 6-3
6a.3.2 Regulatory Guidance and Acceptance Criteria 6-3
6a.4 Review Procedures, Technical Evaluation, and Evaluation Findings 6-4
6a.4.1 Summary Description 6-5
6a.4.2 Confinement 6-6
6a.4.3 Containment 6-16
6a.4.4 Emergency Cooling System 6-16
6a.4.5 Probable Subjects of Technical Specifications 6-16
6a.5 Summary and Conclusions 6-18
6b Radioisotope Production Facility Engineered Safety Features 6-19
6b.1 Areas of Review 6-19
6b.2 Summary of Application 6-19
6b.3 Regulatory Basis and Acceptance Criteria 6-20
6b.3.1 Applicable Regulatory Requirements 6-21
6b.3.2 Regulatory Guidance and Acceptance Criteria 6-22
6b.4 Review Procedures, Technical Evaluation, and Evaluation Findings 6-22
6b.4.1 Summary Description 6-23
6b.4.2 Confinement 6-24
6b.4.3 Containment 6-30
6b.4.4 Emergency Cooling System 6-30
6b.4.5 Nuclear Criticality Safety 6-30
6b.4.6 Probable Subjects of Technical Specifications 6-42
6b.5 Summary and Conclusions 6-43

7.0 INSTRUMENT AND CONTROL SYSTEMS 7-1

7a Irradiation Facility Instrument and Control Systems 7-1
7a.1 Areas of Review 7-1
7a.2 Summary of Application..... 7-2
7a.3 Regulatory Basis and Acceptance Criteria..... 7-2
7a.3.1 Applicable Regulatory Requirements 7-3
7a.3.2 Regulatory Guidance and Acceptance Criteria..... 7-3
7a.4 Review Procedures, Technical Evaluation, and Evaluation Findings..... 7-4
7a.4.1 Summary Description..... 7-5
7a.4.2 Design of Instrumentation and Control Systems..... 7-6
7a.4.3 Target Solution Vessel Process Control Description 7-10
7a.4.4 Target Solution Vessel Reactivity Protection System 7-11
7a.4.5 Engineered Safety Features Actuation System 7-12
7a.4.6 Control Console and Display Information 7-13
7a.4.7 Radiation Monitoring Systems..... 7-14
7a.4.8 Probable Subjects of Technical Specifications 7-14
7a.5 Summary and Conclusions..... 7-15
7b Radioisotope Production Facility Instrument and Control Systems.....7-15
7b.1 Areas of Review 7-16
7b.2 Summary of Application..... 7-16
7b.3 Regulatory Basis and Acceptance Criteria..... 7-16
7b.3.1 Applicable Regulatory Requirements 7-17
7b.3.2 Regulatory Guidance and Acceptance Criteria..... 7-18
7b.4 Review Procedures, Technical Evaluation, and Evaluation Findings..... 7-19
7b.4.1 Summary Description..... 7-19
7b.4.2 Design of Instrumentation and Control Systems..... 7-20
7b.4.3 Production Facility Process Control Systems 7-20
7b.4.4 Engineered Safety Feature and Alarming..... 7-22
7b.4.5 Control Console and Display Instrumentation..... 7-23
7b.4.6 Radiation Monitoring Systems..... 7-24
7b.4.7 Probable Subjects of Technical Specifications 7-24
7b.5 Summary and Conclusions..... 7-25

8.0 ELECTRICAL POWER SYSTEMS 8-1

8a Irradiation Unit Electrical Power Systems.....8-1
8a.1 Areas of Review 8-1
8a.2 Summary of Application..... 8-2
8a.3 Regulatory Basis and Acceptance Criteria..... 8-3
8a.3.1 Applicable Regulatory Requirements 8-4
8a.3.2 Regulatory Guidance and Acceptance Criteria..... 8-4
8a.4 Review Procedures, Technical Evaluation, and Evaluation Findings..... 8-5
8a.4.1 Normal Electrical Power Systems 8-5
8a.4.2 Emergency Electrical Power Systems..... 8-6
8a.4.3 Probable Subjects of Technical Specifications 8-8
8a.5 Summary and Conclusions..... 8-9
8b Radioisotope Production Facility Electrical Power Systems 8-9
8b.1 Areas of Review 8-10

8b.2 Summary of Application 8-10
8b.3 Regulatory Basis and Acceptance Criteria 8-10
8b.4 Review Procedures, Technical Evaluation, and Evaluation Findings 8-10
8b.4.1 Normal Electrical Power Systems 8-11
8b.4.2 Emergency Electrical Power Systems 8-13
8b.4.3 Probable Subjects of Technical Specifications 8-14
8b.5 Evaluation Findings and Conclusions 8-14

9.0 AUXILIARY SYSTEMS 9-1

9a Irradiation Facility Auxiliary Systems 9-1
9a.1 Areas of Review 9-1
9a.2 Summary of Application 9-2
9a.3 Regulatory Basis and Acceptance Criteria 9-4
9a.3.1 Applicable Regulatory Requirements 9-5
9a.3.2 Regulatory Guidance and Acceptance Criteria 9-5
9a.4 Review Procedures, Technical Evaluation, and Evaluation Findings 9-6
9a.4.1 Heating, Ventilation, and Air Conditioning Systems 9-7
9a.4.2 Handling and Storage of Target Solution 9-9
9a.4.3 Fire Protection Systems and Programs 9-10
9a.4.4 Communication Systems 9-13
9a.4.5 Possession and Use of Byproduct, Source, and Special Nuclear Material 9-13
9a.4.6 Cover Gas Control in Closed Primary Coolant Systems 9-14
9a.4.7 Other Auxiliary Systems 9-14
9a.4.8 Probable Subjects of Technical Specifications 9-15
9a.5 Summary and Conclusion 9-16
9b Radioisotope Production Facility Auxiliary Systems 9-16
9b.1 Areas of Review 9-16
9b.2 Summary of Application 9-17
9b.3 Regulatory Basis and Acceptance Criteria 9-19
9b.4 Review Procedures, Technical Evaluation, and Evaluation Findings 9-19
9b.4.1 Heating, Ventilation, and Air Conditioning Systems 9-19
9b.4.2 Handling and Storage of Target Solution 9-19
9b.4.3 Fire Protection Systems and Programs 9-20
9b.4.4 Communication Systems 9-20
9b.4.5 Possession and Use of Byproduct, Source, and Special Nuclear Material 9-20
9b.4.6 Cover Gas Control in Closed Primary Coolant Systems 9-21
9b.4.7 Other Auxiliary Systems 9-22
9b.4.8 Probable Subjects of Technical Specifications 9-24
9b.5 Summary and Conclusions 9-25

10.0 EXPERIMENTAL FACILITIES 10-1

11.0 RADIATION PROTECTION PROGRAM AND WASTE MANAGEMENT 11-1

11.1 Areas of Review 11-1

11.2 Summary of Application 11-3
11.3 Regulatory Basis and Acceptance Criteria 11-8
11.3.1 Applicable Regulatory Requirements 11-9
11.3.2 Regulatory Guidance and Acceptance Criteria 11-10
11.4 Review Procedures, Technical Evaluation, and Evaluation Findings 11-10
11.4.1 Radiation Sources 11-11
11.4.2 Radiation Protection Program 11-19
11.4.3 ALARA Program 11-20
11.4.4 Radiation Monitoring and Surveying 11-22
11.4.5 Radiation Exposure Control and Dosimetry 11-25
11.4.6 Contamination Control 11-30
11.4.7 Environmental Monitoring 11-31
11.4.8 Radioactive Waste Management Program 11-34
11.4.9 Radioactive Waste Controls 11-35
11.4.10 Release of Radioactive Waste 11-40
11.4.11 Respiratory Protection Program 11-41
11.4.12 Probable Subjects of Technical Specifications 11-44
11.5 Summary and Conclusions 11-44

12.0 CONDUCT OF OPERATIONS 12-1

12.1 Areas of Review 12-1
12.2 Summary of Application 12-2
12.3 Regulatory Basis and Acceptance Criteria 12-3
12.3.1 Applicable Regulatory Requirements 12-4
12.3.2 Regulatory Guidance and Acceptance Criteria 12-5
12.4 Review Procedures and Technical Evaluation 12-5
12.4.1 Organization 12-6
12.4.2 Review and Audit Activities 12-8
12.4.3 Procedures 12-10
12.4.4 Required Actions 12-11
12.4.5 Reports 12-11
12.4.6 Records 12-12
12.4.7 Emergency Planning 12-12
12.4.8 Security Planning 12-33
12.4.9 Quality Assurance 12-33
12.4.10 Operator Training and Requalification 12-44
12.4.11 Startup Plan 12-45
12.4.12 Environmental Reports 12-45
12.4.13 Material Control and Accounting Plan 12-45
12.5 Summary and Conclusions 12-46

13.0 ACCIDENT ANALYSES 13-1

13a Irradiation Facility Accident Analyses 13-1
13a.1 Areas of Review 13-1
13a.2 Summary of Application 13-2
13a.3 Regulatory Basis and Acceptance Criteria 13-3
13a.3.1 Applicable Regulatory Requirements 13-3
13a.3.2 Regulatory Guidance and Acceptance Criteria 13-4
13a.4 Review Procedures, Technical Evaluation, and Evaluation Findings 13-5
13a.4.1 Maximum Hypothetical Accident 13-6

13a.4.2 Insertion of Excess Reactivity/Inadvertent Criticality..... 13-9
13a.4.3 Reduction in Cooling 13-11
13a.4.4 Mishandling or Malfunction of Target Solution..... 13-13
13a.4.5 Loss of Electrical Power 13-15
13a.4.6 External Events..... 13-15
13a.4.7 Mishandling or Malfunction of Equipment..... 13-16
13a.4.8 Large Undamped Power Oscillations 13-18
13a.4.9 Detonation and Deflagration..... 13-19
13a.4.10 Unintended Exothermic Chemical Reactions Other Than Explosion 13-20
13a.4.11 Primary System Boundary System Interaction Events..... 13-20
13a.4.12 Inadvertent Exposure to Neutrons from the Neutron Driver..... 13-21
13a.4.13 Irradiation Facility Fires 13-22
13a.4.14 Tritium Purification System (TPS) Design Basis Accident 13-23
13a.4.15 Probable Subjects of Technical Specifications 13-25
13a.5 Summary and Conclusions..... 13-26
13b Radioisotope Production Facility Accident Analysis 13-27
13b.1 Areas of Review 13-27
13b.2 Summary of Application..... 13-28
13b.3 Regulatory Basis and Acceptance Criteria..... 13-29
13b.3.1 Applicable Regulatory Requirements 13-30
13b.3.2 Regulatory Guidance and Acceptance Criteria..... 13-30
13b.4 Review Procedures, Technical Evaluation, and Evaluation Findings..... 13-31
13b.4.1 Processes Conducted Outside of the Irradiation Facility..... 13-32
13b.4.2 Accident Initiating Events 13-34
13b.4.3 Maximum Hypothetical Accident 13-37
13b.4.4 Loss of Containment 13-38
13b.4.5 Loss of Normal Electric Power 13-38
13b.4.6 External Events..... 13-39
13b.4.7 Mishandling or Malfunction of Equipment..... 13-40
13b.4.8 Inadvertent Nuclear Criticality in the Radioisotope Production Facility..... 13-41
13b.4.9 Radioisotope Production Facility Fire 13-42
13b.4.10 Analyses of Accidents with Hazardous Chemicals Produced from Licensed Material..... 13-43
13b.4.11 Probable Subjects of Technical Specifications 13-44
13b.5 Summary and Conclusions..... 13-44

14.0 TECHNICAL SPECIFICATIONS 14-1

14.1 Areas of Review.....14-1
14.2 Summary of Application 14-1
14.3 Regulatory Basis and Acceptance Criteria 14-2
14.3.1 Applicable Regulatory Requirements..... 14-3
14.3.2 Regulatory Guidance and Acceptance Criteria 14-3
14.4 Review Procedures, Technical Evaluation, and Evaluation Findings.....14-4
14.5 Summary and Conclusions 14-5

15.0 FINANCIAL QUALIFICATIONS 15-1

15.1 Areas of Review 15-1
15.2 Summary of Application 15-1
15.3 Regulatory Basis and Acceptance Criteria 15-2
15.3.1 Applicable Regulatory Requirements 15-2
15.3.2 Regulatory Guidance and Acceptance Criteria 15-2
15.4 Review Procedures, Technical Evaluation, and Evaluation Findings 15-3
15.4.1 Financial Ability to Construct the SHINE Facility 15-3
15.4.2 Financial Ability to Operate the SHINE Facility 15-5
15.4.3 Financial Ability To Decommission the SHINE Facility 15-5
15.4.4 Foreign Ownership, Control, or Domination (FOCD) 15-6
15.4.5 Nuclear Insurance and Indemnity 15-6
15.5 Summary and Conclusions 15-7

16.0 OTHER LICENSE CONSIDERATIONS 16-1

17.0 DECOMMISSIONING AND POSSESSION-ONLY LICENSE AMENDMENTS 17-1

18.0 HIGHLY ENRICHED TO LOW ENRICHED URANIUM CONVERSIONS 18-1

APPENDIX A. POST CONSTRUCTION PERMIT ACTIVITIES – CONSTRUCTION PERMIT CONDITIONS AND FINAL SAFETY ANALYSIS REPORT COMMITMENTS A-1

APPENDIX B. REFERENCES B-1

APPENDIX C. PRINCIPAL CONTRIBUTORS C-1

APPENDIX D. REPORT BY THE ADVISORY COMMITTEE ON REACTOR SAFEGUARDS D-1

FIGURES

Figure 2.1-1. City of Janesville 2-3
Figure 2.2-2. SHINE Facility — General Location Map 2-4
Figure 2.2-3. Nearby Industrial and Transportation Facilities 2-6

TABLES

Table 2.2-1. Total Crash Probability 2-13
Table 6a2.2-11-1. Comparison of Unmitigated and Mitigated Radiological Doses for IF DBAs 6-13
Table 6b.2-6-1. Comparison of Unmitigated and Mitigated Radiological Doses for RPF DBAs 6-26
Table 6b-1. Summary of USL Determination 6-36
Table 6b-2. Area of Applicability Summary 6-37

ABBREVIATIONS AND ACRONYMS

°C	degrees Celsius
°F	degrees Fahrenheit
1/M	inverse subcritical multiplication factor
A	ampere
AC	alternating current
ACI	American Concrete Institute
ACRS	Advisory Committee on Reactor Safeguards
ADAMS	Agencywide Documents Access and Management System
AHR	aqueous homogeneous reactor
ALARA	as low as is reasonably achievable
ALOHA	Areal Locations of Hazardous Atmospheres
ANS	American Nuclear Society
ANSI	American National Standards Institute
AOA	area of applicability
APF	assigned protection factor
ASCE	American Society of Civil Engineers
ASME	American Society of Mechanical Engineers
ASTM	American Society for Testing and Materials
BPVC	Boiler and Pressure Vessel Code
CAAS	criticality accident and alarm system
CAMS	continuous air monitoring system
CEUS-SSC	Central and Eastern United States Seismic Source Characterization for Nuclear Facilities
CFD	computational fluid dynamics
CFR	*Code of Federal Regulations*
cm	centimeter(s)
COO	Chief Operating Officer
COV	coefficient of variation
DAC	derived air concentration
DBA	design-basis accident
DC	direct current
DOE	U.S. Department of Energy
DOT	U.S. Department of Transportation
EAL	emergency action level
ED	Emergency Director
EIS	environmental impact statement
EPA	U.S. Environmental Protection Agency
EPIP	emergency plan implementing procedure
EPRI	Electric Power Research Institute
EPZ	Emergency Planning Zone
ERO	Emergency Response Organization
ESC	emergency support center
ESF	engineered safety feature
ESFAS	engineered safety feature actuation system
FA	Fire Area
FAA	Federal Aviation Administration
FCHS	facility chilled water supply and distribution system
FHA	fire hazards analysis

ft	feet
FMEA	failure modes and effects analysis
FOCD	foreign ownership, control, or domination
FPS	fire protection system
FQ	financial qualification
FR	*Federal Register*
FSAR	final safety analysis report
FVZ4	facility ventilation Zone 4
G_{BE}	best-estimate (mean) soil properties
G_{LB}	lower bound soil properties
G_{UB}	upper bound soil properties
GDC	General Design Criteria (Criterion)
gpm	gallons per minute
HAZOPS	hazards and operability study
HEPA	high-efficiency particulate air
HRA	high radiation area
HVAC	heating, ventilation, and air conditioning
HVPS	high voltage power supply
Hz	hertz
I&C	instrumentation and control
IAEA	International Atomic Energy Agency
ICRP	International Commission on Radiation Protection
IE	initiating event
IEEE	Institute of Electrical and Electronics Engineers
IF	irradiation facility
IMR	Issue Management Report
IROFS	items relied on for safety
ISA	integrated safety analysis
ISG	interim staff guidance
IU	irradiation unit
k_{eff}	effective neutron multiplication factor
kg/m^2	kilograms per square meter
km	kilometer(s)
kPa	kilopascal(s)
kV	kilovolt(s)
kVA	kilovoltampere(s)
LANL	Los Alamos National Laboratory
lb/ft^2	pounds per square foot
LCO	limiting conditions of operation
LEU	low-enriched uranium
LOOP	loss of off-site power
LSSS	limiting safety system settings
LWPS	light-water pool system
m	meter(s)
M&TE	measuring and test equipment
MC&A	material control and accounting
MCC	motor control center
MCNP	Monte Carlo N-Particle computer code
MEI	maximally exposed individual
MEPS	molybdenum extraction and purification system
MeV	million electron volts

mg	milligrams
MHA	maximum hypothetical accident
mi	mile(s)
MIPF	Medical Isotope Production Facility
MIPS	molybdenum isotope product packaging system
MMI	Modified Mercalli Intensity
Mo-99	molybdenum-99
mrem	millirem
mrem/hr	millirem per hour
MUPS	light water pool and primary closed loop cooling make-up system
N-16	nitrogen-16
NCS	nuclear criticality safety
NCSE	nuclear criticality safety evaluation
NCSP	Nuclear Criticality Safety Program
NDAS	neutron driver assembly system
NEC	National Electrical Code
NFDS	neutron flux detection system
NFPA	National Fire Protection Association
NGRS	noble gas removal system
NRC	U.S. Nuclear Regulatory Commission
OLWS	organic liquid waste storage and export
ORNL	Oak Ridge National Laboratory
PAG	protective action guideline (EPA)
PCLS	primary closed loop cooling system
PHA	preliminary hazard analysis
PMF	probable maximum flood
PMP	probable maximum precipitation
PSAR	preliminary safety analysis report
PSB	primary system boundary
psi	pounds per square inch
PSTS	probably subjects of technical specifications
Pu	plutonium
PUREX	plutonium and uranium extraction
PVVS	process vessel vent system
QA	quality assurance
QAP	Quality Assurance Plan
QAPD	Quality Assurance Program Description
RAI	request for additional information
RAMS	radiation area monitoring system
RCA	radiologically controlled area
RDS	radioactive drain system
rem	roentgen equivalent man
REMP	radiological environmental monitoring program
RICS	radiological integrated control system
RLWE	radioactive liquid waste evaporation and immobilization system
RLWS	radioactive liquid waste storage
RP	radiation protection
RPCS	radioisotope production facility primary cooling system
RPF	radioisotope production facility
RPM	Radiation Protection Manager
RTF	Radioiodine Test Facility

RV	radiologically controlled area (RCA) ventilation system
RVZ1	radiologically controlled area (RCA) ventilation system Zone 1
RVZ2	radiologically controlled area (RCA) ventilation system Zone 2
RVZ3	radiologically controlled area (RCA) ventilation system Zone 3
RWP	radiation work permit
SAR	safety analysis report
SASS	subcritical assembly support structure
SASSI	Structural Analysis Software System Interface
SCAS	subcritical assembly system
SCL	Saint Charles Lineament
SDG	standby diesel generator
SER	safety evaluation report
SHINE	SHINE Medical Technologies, Inc.
SIXEP	site ion exchange effluent plant
SL	safety limit
SNM	special nuclear material
SRM	stack release monitoring
SRWP	solid radioactive waste packaging system
SSCs	structures, systems, and components
SWRA	Southern Wisconsin Regional Airport
TBP	tributyl phosphate
TDN	thermal denitration
TEDE	total effective dose equivalent
TOGS	target solution vessel (TSV) off-gas system
TPCS	target solution vessel (TSV) process control system
TPS	tritium purification system
TRCS	target solution vessel (TSV) reactivity control system
TRPS	target solution vessel (TSV) reactivity protection system
TS	technical specifications
TSPS	target solution preparation system
TSV	target solution vessel
U-233	uranium-233
U-235	uranium-235
U-238	uranium-238
UNCS	uranyl nitrate conversion system
UNP	uranyl nitration preparation
UPSS	uninterruptible power supply system
UREX	uranium extraction
USGS	U.S. Geological Survey
VAC	volts – alternating current
VDC	volts – direct current
VHRA	very high radiation area
yr	year

1.0 THE FACILITY

This chapter of the safety evaluation report (SER) is a general introduction to the facility and an overview of the topics covered in detail in other chapters of this SER, including areas of review, regulatory criteria and guidance, review procedures and findings, and conclusions.

1.1 Introduction

This SER documents the results of the U.S Nuclear Regulatory Commission (NRC) staff's (the staff's) technical review of the construction permit application submitted by SHINE Medical Technologies, Inc. (SHINE or the applicant) under Title 10 of the *Code of Federal Regulations* (10 CFR) Part 50, "Domestic Licensing of Production and Utilization Facilities," for a medical radioisotope production facility. The proposed facility would consist of an irradiation facility (IF) and radioisotope production facility (RPF) for the irradiation and processing of special nuclear material to produce medical radioisotopes, such as molybdenum-99. The IF would consist of eight subcritical operating assemblies (or irradiation units [IUs]), which would each be licensed as utilization facilities as defined 10 CFR 50.2, "Definitions." The RPF would consist of three hot cell structures, licensed collectively as a production facility, as defined in 10 CFR 50.2. In this SER, the IF and RPF are collectively referred to as the SHINE facility. An environmental review was also performed of the SHINE construction permit application and its evaluation and conclusions are documented in an environmental impact statement, published as NUREG-2183, "Final Environmental Impact Statement for the Construction Permit for the SHINE Medical Radioisotope Production Facility."

By letter dated March 26, 2013 (Reference 2), SHINE submitted Part 1 of a two-part application for a construction permit, which, if granted, would allow SHINE to construct a medical radioisotope production facility in Janesville, Wisconsin. The NRC staff acknowledged receipt of Part 1 of SHINE's two-part application for a construction permit under 10 CFR Part 50 in the *Federal Register* (FR) (78 FR 29390) on May 20, 2013. An exemption from certain requirements of 10 CFR 2.101, "Filing of application," paragraph (a)(5) was granted by the Commission on March 20, 2013 (Reference 8), in response to a letter from SHINE dated February 18, 2013 (Reference 9). The exemption allowed SHINE to submit its construction permit application in two parts. Specifically, the exemption allowed SHINE to submit a portion of its application for a construction permit up to 6 months prior to the remainder of the application regardless of whether or not an environmental impact statement or a supplement to an environmental impact statement is prepared. In accordance with 10 CFR 2.101(a)(5), SHINE submitted the following in part one of its construction permit application:

- Description and safety assessment of the site required by 10 CFR 50.34, "Contents of applications; technical information," paragraph (a)(1).

- Environmental report required by 10 CFR 50.30, "Filing of applications for licenses; oath or affirmation," paragraph (f).

- Filing fee information required by 10 CFR 50.30(e) and 10 CFR 170.21, "Schedule of fees for production or utilization facilities, review of standard referenced design approvals, special projects, inspections, and import and export licenses."

- General information required by 10 CFR 50.33, “Contents of applications; general information.”

- Agreement limiting access to classified information required by 10 CFR 50.37, “Agreement limiting access to Classified Information.”

The staff conducted a docketing acceptance review of SHINE’s partial application and by letter dated June 25, 2013 (Reference 10), determined that Part 1 of SHINE’s application for a construction permit was complete and acceptable for docketing. The application was assigned Docket No. 50-608. A notice of docketing Part 1 of SHINE’s application was published in the *Federal Register* on July 1, 2013 (78 FR 39343).

By letter dated May 31, 2013 (Reference 1), SHINE submitted the second and final part of its two-part application for a construction permit pursuant to the regulations contained in 10 CFR Part 50,” which contained the remainder of the preliminary safety analysis report (PSAR) required by 10 CFR 50.34(a), “Preliminary safety analysis report.”

While the staff was conducting its acceptance review of Part 2 of SHINE’s application for a construction permit, it identified that the SHINE application did not include a discussion of preliminary plans for coping with emergencies, as required by 10 CFR 50.34(a)(10). Requirements for this plan are set forth in 10 CFR Part 50, Appendix E, “Emergency Planning and Preparedness for Production and Utilization Facilities.” Therefore, the NRC staff requested that SHINE provide a preliminary plan for coping with emergencies, as required by 10 CFR 50.34(a)(10), within 30 days of the date of a letter dated August 28, 2013 (Reference 11), otherwise the application would be considered incomplete and unacceptable for docketing.

By letter dated September 25, 2013 (Reference 3), SHINE supplemented its construction permit application with a discussion of preliminary plans for coping with emergencies, as required by 10 CFR 50.34(a)(10), completing its application for a construction permit.

By letter dated December 2, 2013 (Reference 12), the NRC staff informed SHINE that Part 2 of its construction permit application, as supplemented, contained the remainder of the PSAR required by 10 CFR 50.34(a), was submitted in accordance with the requirements of 10 CFR 2.101(a)(5), and was placed, in its entirety, under Docket No. 50-608. A notice of docketing was published in the *Federal Register* on December 9, 2013 (78 FR 73897).

1.1.1 Areas of Review

The review of SHINE’s construction permit application consisted of two concurrent reviews: (1) a safety review of SHINE’s PSAR and (2) an environmental review of SHINE’s environmental report. The staff reviewed the SHINE PSAR against applicable regulatory requirements using appropriate regulatory guidance and standards, as discussed below, to assess the sufficiency of the preliminary design of the SHINE IF and RPF. As part of this review, the staff evaluated descriptions and discussions of SHINE’s structures, systems, and components (SSCs), with special attention to design and operating characteristics, unusual or novel design features, and principal safety considerations. The preliminary design of the SHINE IF and RPF was evaluated to ensure the sufficiency of principal design criteria, design bases, and information relative to materials of construction, general arrangement, and approximate dimensions, sufficient to provide reasonable assurance that the final design will conform to the design bases. In addition, the staff reviewed SHINE’s identification and justification for the selection of those variables, conditions, or other items that are determined to be probable

subjects of technical specifications for the facility, with special attention given to those items that may significantly influence the final design. The SSCs were also evaluated to ensure that they would adequately provide for the prevention of accidents and the mitigation of consequences of accidents. The staff considered the preliminary analysis and evaluation of the design and performance of the SSCs of the SHINE facility, including those SSCs shared by both the IF and RPF, with the objective of assessing the risk to public health and safety resulting from operation of the facility.

In accordance with Section 102(2)(A) (42 [United States Code] U.S.C. § 4332(2)(A)) of the National Environmental Policy Act, the staff prepared a Final Environmental Impact Statement (EIS) based on its independent assessment of the information provided by SHINE and information developed independently by the staff. The staff conducted an independent evaluation of the application and conducted a systematic, interdisciplinary review of the potential impacts of the proposed action on the human environment and reasonable alternatives to SHINE's proposal. Before development of the Draft EIS, the staff issued a notice of intent and invited the public to provide information relevant to the environmental review. The staff also provided opportunities for governmental and general public participation during the public meeting on the Draft EIS and used publicly available guidance in the development of its Final EIS. The Final EIS, published as NUREG-2183, meets the requirements of 10 CFR Part 51, "Environmental Protection Regulations for Domestic Licensing and Related Regulatory Functions."

1.1.2 Regulatory Basis and Acceptance Criteria

The staff reviewed the SHINE PSAR against applicable regulatory requirements, using appropriate regulatory guidance and standards, to assess the sufficiency of the preliminary facility design and analysis for the issuance of a construction permit. In applying guidance and acceptance criteria, the staff used its judgment as to which acceptance criteria were relevant to SHINE's proposed facility, as much of this guidance was originally developed for nuclear reactors. The staff evaluated the sufficiency of the SHINE preliminary design, as described in the PSAR, based on SHINE's design methodology and ability to provide reasonable assurance that the final design will conform to the design bases and allow adequate margin for safety.

In accordance with paragraph (a) of 10 CFR 50.35, "Issuance of construction permits," a construction permit authorizing SHINE to proceed with construction may be issued if the NRC makes the following findings:

(1) The applicant has described the proposed design of the facility, including, but not limited to, the principal architectural and engineering criteria for the design, and has identified the major features or components incorporated therein for the protection of the health and safety of the public.

(2) Such further technical or design information as may be required to complete the safety analysis, and which can reasonably be left for later consideration, will be supplied in the final safety analysis report (FSAR).

(3) Safety features or components, if any, which require research and development have been described by the applicant and a research and development program will be conducted that is reasonably designed to resolve any safety questions associated with such features or components.

(4) On the basis of the foregoing, there is reasonable assurance that: (i) such safety questions will be satisfactorily resolved at or before the latest date stated in the application for completion of construction of the proposed facility, and (ii) taking into consideration the site criteria contained in 10 CFR Part 100, "Reactor Site Criteria," the proposed facility can be constructed and operated at the proposed location without undue risk to the health and safety of the public.

With respect to the last of these findings, the staff notes that the requirements of 10 CFR Part 100 are specific to nuclear power reactors, and therefore not applicable to the SHINE facility. However, the staff evaluated SHINE's site-specific conditions using site criteria similar to 10 CFR Part 100, by using the guidance in NUREG-1537. The staff's review evaluated the geography and demography of the site; nearby industrial, transportation, and military facilities; site meteorology; site hydrology; and site geology, seismology, and geotechnical engineering to ensure that issuance of the construction permit will not be inimical to public health and safety. The staff's review also evaluated structures, systems, components, equipment, and systems designed to ensure safe operation, performance, and shutdown when subjected to extreme weather, floods, seismic events, missiles (including aircraft impacts), chemical and radiological releases, and loss of offsite power.

The construction permit, if issued, would constitute an authorization for SHINE to proceed with construction. The staff's evaluation of the preliminary design and analysis of the SHINE facility does not constitute approval of the safety of any design feature or specification. Such approval will be made following the evaluation of the final design of the facility, as described in the FSAR as part of SHINE's operating license application.

In addition to the findings listed in 10 CFR 50.35, a construction permit application must also provide sufficient information to allow the Commission to make the following determinations in accordance with 10 CFR 50.40, "Common standards," and 50.50, "Issuance of licenses and construction permits":

(1) There is reasonable assurance: (i) that the construction of the facility will not endanger the health and safety of the public, and (ii) that construction activities can be conducted in compliance with the Commission's regulations.

(2) The applicant is technically qualified to engage in the construction of its proposed facility in accordance with the Commission's regulations.

(3) The applicant is financially qualified to engage in the construction of its proposed facility in accordance with the Commission's regulations.

(4) The issuance of a permit for the construction of the facility would not be inimical to the common defense and security or to the health and safety of the public.

(5) After weighing the environmental, economic, technical and other benefits of the facility against environmental and other costs and considering reasonable available alternatives, the issuance of this construction permit, subject to the conditions for protection of the environment set forth herein, is in accordance with Subpart A of 10 CFR Part 51 of the Commission's regulations and all applicable requirements have been satisfied.

(6) The application meets the standards and requirements of the Atomic Energy Act and the Commission's regulations, and that notifications, if any, to other agencies or bodies have been duly made.

The staff's evaluation of SHINE's preliminary design and analysis was based primarily upon the following 10 CFR requirements:

- 10 CFR 50.2, "Definitions."
- 10 CFR 50.22, "Class 103 licenses; for commercial and industrial facilities."
- 10 CFR 50.33, "Contents of applications; general information," paragraph (f).
- 10 CFR 50.34, "Contents of applications; technical information," paragraph (a), "Preliminary safety analysis report."
- 10 CFR 50.35, "Issuance of construction permits."
- 10 CFR 50.40, "Common standards."
- 10 CFR 50.55, "Conditions of construction permits, early site permits, combined licenses, and manufacturing licenses."
- 10 CFR 50.58, "Hearings and report of the Advisory Committee on Reactor Safeguards."
- 10 CFR Part 50, Appendix C, "A Guide for the Financial Data and Related Information Required to Establish Financial Qualifications for Construction Permits and Combined Licenses."
- 10 CFR Part 50, Appendix E, "Emergency Planning and Preparedness for Production and Utilization Facilities."
- 10 CFR 20.1201, "Occupational dose limits for adults."
- 10 CFR 20.1301, "Dose limits for individual members of the public."

As required by 10 CFR 50.34(a)(3)(i), SHINE must describe the principal design criteria for its facility in the PSAR; however, SHINE is not required to follow 10 CFR Part 50, Appendix A, "General Design Criteria [GDCs] for Nuclear Power Plants," which applies only to nuclear power reactors. Nonetheless, SHINE has applied the GDCs to the preliminary design of its facility, as appropriate. As such, the staff based its review of SHINE's principal design criteria, in part, on SHINE's application of the following GDCs, as described in Tables 3.5a-1 "Appendix A to 10 CFR 50 General Design Criteria Which Have Been Interpreted As They Apply to the SHINE Irradiation Facility," and 3.5b-1 "Baseline and General Design Criteria for Radioisotope Production Facility," of the SHINE PSAR.

Given the similarities in SHINE's proposed facility and non-power research reactors, the staff used established guidance documents and the Commission's regulations to determine the acceptance criteria for demonstrating compliance with 10 CFR regulatory requirements. For example, the staff used:

- NUREG-1537, Part 1, "Guidelines for Preparing and Reviewing Applications for the Licensing of Non-Power Reactors, Format and Content," issued February 1996 (Reference 4).

- NUREG-1537, Part 2, "Guidelines for Preparing and Reviewing Applications for the Licensing of Non-Power Reactors, Standard Review Plan and Acceptance Criteria," issued February 1996 (Reference 5).

- "Final Interim Staff Guidance [ISG] Augmenting NUREG-1537, Part 1, 'Guidelines for Preparing and Reviewing Applications for the Licensing of Non-Power Reactors: Format and Content,' for Licensing Radioisotope Production Facilities and Aqueous Homogeneous Reactors," dated October 17, 2012 (Reference 6).

- "Final Interim Staff Guidance [ISG] Augmenting NUREG-1537, Part 2, 'Guidelines for Preparing and Reviewing Applications for the Licensing of Non-Power Reactors: Standard Review Plan and Acceptance Criteria,' for Licensing Radioisotope Production Facilities and Aqueous Homogeneous Reactors," dated October 17, 2012 (Reference 7).

- NUREG-0849, "Standard Review Plan for the Review and Evaluation of Emergency Plans for Research and Test Reactors," issued October 1983 (Reference 52).

As appropriate, the staff used additional guidance (e.g., NRC regulatory guides, Institute of Electrical and Electronics Engineers [IEEE] standards, American National Standards Institute/American Nuclear Society [ANSI/ANS] standards, and NRC office instructions) in the review of SHINE's PSAR. The additional guidance was used based on the technical judgment of the reviewer, as well as references in NUREG-1537, Parts 1 and 2; the ISG Augmenting NUREG-1537, Parts 1 and 2; and the SHINE PSAR.

1.1.3 Review Procedures

The staff's review was tailored to the nature of SHINE's application and was informed by the staff's ISG Augmenting NUREG-1537, NUREG-1537, as well as other relevant guidance cited therein, cited in the application, or used based on the staff's technical judgment. In particular, SHINE's 10 CFR Part 50 construction permit application only seeks authorization to construct the proposed SHINE facility. Therefore, the level of detail needed in the application and the staff's corresponding SER is different than for a combined operating license or an operating license. For the purposes of issuing a construction permit, the SHINE facility may be adequately described at a functional or conceptual level in the PSAR. As such, SHINE has deferred providing many design and analysis details until the submission of its FSAR with its operating license application.

The objective of the staff's evaluation was to assess the sufficiency of information contained in the PSAR for the issuance of a construction permit, in accordance with 10 CFR 50.35(a) and 10 CFR 50.40. An in-depth evaluation of the SHINE design will be performed following the staff's receipt of SHINE's FSAR.

The staff's safety review was also tailored to the unique and novel technology described in SHINE's construction permit application. SHINE proposes to construct an IF and a RPF housed within a single building. The proposed IF consists of eight subcritical operating assemblies, each of which would be licensed as a utilization facility as defined in 10 CFR 50.2. The

proposed RPF consists of three “supercells” for the separation of molybdenum-99 (Mo-99) from irradiated target solution, plus hot-cell and glove-box structures for processing of irradiated and un-irradiated low-enriched uranium (LEU) materials, licensed collectively as a production facility, as defined in 10 CFR 50.2.

1.1.4 Resolving Technical Issues

For those technical areas that require additional information supported by research and development (i.e., a maturation of facility design), the staff has several options:

(1) The staff may determine that such technical issues must be resolved prior to the issuance of a construction permit.

(2) The staff may determine that such information may be left until the submission of the FSAR.

(3) The staff may require that such technical issues be resolved prior to the completion of construction, but after the issuance of the construction permit.

Technical issues that fall within the scope of the first option require additional information be provided in order to establish principal design criteria and/or design bases so that the staff may have confidence that the final facility design will conform to the design basis. The staff resolves such technical issues through requests for additional information (RAIs).

In the second and third options, the staff may also issue RAIs to resolve identified technical issues. These types of technical issues are those that require a design maturity beyond what is required by 10 CFR 50.34(a) to issue a construction permit. Although determining what constitutes a preliminary versus a final design may be somewhat subjective, according to 10 CFR 50.34, a preliminary design must only include principal design criteria, the design bases, general facility arrangement, and approximate dimensions. This information should be sufficient to provide reasonable assurance that the final design will conform to the design bases with adequate margin for safety. The staff may issue RAIs if it determines that it is necessary for the applicant to acknowledge certain technical deficiencies that could impact final design. Appropriate responses to these RAIs include commitments to resolving these deficiencies either in the FSAR or before the completion of construction.

During its review of the SHINE construction permit application, the NRC staff determined that additional information was required to complete the review of SHINE’s PSAR and for the staff to prepare this SER. Therefore, the staff prepared and issued RAIs dated September 19, 2014, January 6, 2015, March 25, 2015, April 15, 2015, and September 24, 2015 (Reference 14, Reference 15, Reference 16, Reference 17, and Reference 18, respectively).

As of September 2015, SHINE acceptably responded to all staff RAIs for developing an SER. However, the staff has determined that additional information is needed to address certain matters related to nuclear criticality safety and radiation protection in the RPF. Appendix A, “Permit Conditions and Regulatory Commitments,” to this SER identifies permit conditions that the staff recommends be included in a construction permit, if issued to SHINE. The conditions are confirmatory in nature and must be satisfied prior to the completion of construction. Additional details on the basis and timing of satisfaction for each condition appear in the technical evaluations of the SHINE construction permit SER, Chapters 6, “Engineered Safety Features,” and 11, “Radiation Protection Program and Waste Management.”

Additionally, SER Appendix A contains a listing of those elements of design, analysis, and administration identified as requiring additional research and development or correction by the applicant through its Issues Management Report System. The staff determined that resolution of these items is not necessary for the issuance of a construction permit, but the applicant should ensure that these items are fully addressed in the FSAR supporting the issuance of an operating license. The staff is tracking these items as regulatory commitments and will verify their implementation during the review of a SHINE operating license application.

1.1.5 Ongoing Research and Development

The provisions of 10 CFR 50.34(a)(8) allow for ongoing research and development to confirm the adequacy of the design of structures, systems, and components to resolve safety questions prior to the completion of construction. In accordance with 10 CFR 50.34(a)(8), and as described in SHINE PSAR Section 1.3.9, "Research and Development," and in response to RAI G-1, SHINE has identified two ongoing research and development activities:

(1) Irradiation and corrosion testing at Oak Ridge National Laboratory to study mechanical performance of materials, as described in the PSAR.

(2) Precipitation studies at Argonne National Laboratory to ensure precipitation of uranyl peroxide in the target solution will not occur, as described in response to RAI G-1.

In support of these activities, SHINE has provided descriptions of affected SSCs, the remaining work to be performed, and anticipated schedules for completion. By letter dated September 29, 2015 (Reference 104), SHINE has stated that the latest date for completion of construction is expected to be December 31, 2022. Based on the schedules provided in response to RAI G-1, SHINE's two research and development activities would be resolved in advance of the estimated completion of construction. As described in Appendix A to this SER, the staff is tracking these activities and will verify their resolution prior to the completion of construction.

1.1.6 Advisory Committee on Reactor Safeguards Review

To support the Advisory Committee on Reactor Safeguards (ACRS) in providing an independent review and report to the Commission regarding the SHINE construction permit application, the staff presented the results of its safety evaluation to the Radiation Protection and Nuclear Materials Subcommittee at four meetings on: June 23, 2015, June 24, 2015, August 19, 2015, and September 22, 2015. The staff presented the results of its SHINE construction permit application review to the ACRS Full Committee on October 8, 2015. The ACRS issued a letter on October 15, 2015, which has been included as Appendix D, "Report by the Advisory Committee on Reactor Safeguards," of this SER, fulfilling the requirement of 10 CFR 50.58, "Hearings and report of the Advisory Committee on Reactor Safeguards," that the ACRS review and report on construction permits for a facility of the type described in 10 CFR 50.22, "Class 103 licenses; for commercial and industrial facilities."

The ACRS letter to the Commission recommended that the SHINE construction permit should be approved. The ACRS identified two safety concerns that could impact the operation of the SHINE facility, if not sufficiently addressed during construction. To address these concerns, the ACRS requested and SHINE and the staff provided additional information on (1) the facility's layup capability, and (2) the facility's ability to withstand potential aircraft impact. The ACRS

noted that, "nuclear chemical processing facilities need to have built-in capability to support layup following unexpected process interruptions. It must be possible to stop the process, safely remove materials within the system, clean the system, and place it in a safe condition for an extended period in a way that does not challenge the facility piping systems and chemical reactors." During the ACRS subcommittee and full committee meetings, SHINE and the NRC staff: (1) provided information addressing the provisions made to address facility layup, and (2) clarified the analysis of the SHINE facility's ability to withstand aircraft impacts. Based on discussions during the subcommittee and full committee meetings, the ACRS determined that SHINE and the NRC staff provided sufficient information to address facility layup and potential aircraft impact, such that it could recommend the issuance of a construction permit. Additionally, SHINE clarified the relationship between safety-related SSCs and safety-related activities, by defining safety-related activities. SHINE has committed to providing procedures for facility layup and an updated quality assurance program description that includes its definition of safety-related activities in its FSAR (References 102 and 103). The staff is tracking these commitments in Appendix A of this SER.

1.1.7 Application Availability

Publicly-available documents related to the SHINE construction permit application may be obtained online in the ADAMS Public Documents collection at http://www.nrc.gov/reading-rm/adams.html. To begin the search, select "ADAMS Public Documents" and then select "Begin Web-based ADAMS Search." For problems with ADAMS, please contact the NRC's Public Document Room (PDR) reference staff at 1-800-397-4209, at 301-415-4737, or by e-mail to pdr.resource@nrc.gov.

The current version of SHINE's PSAR, submitted August 27, 2015, is publicly available in ADAMS, under Accession No. ML15258A431 (Reference 19). Other public documents and correspondence related to this application may be found by searching SHINE's Docket Number, 50-608, or project number PROJ0792 in ADAMS. Portions of the application or correspondence containing sensitive information (e.g., proprietary information) are being withheld form public disclosure pursuant to 10 CFR 2.390, "Public inspections, exemptions, requests for withholding."

1.1.8 NRC Staff Contact Information

The project manager for this SER was Steven Lynch, Project Manager, Division of Policy and Rulemaking, U.S. Nuclear Regulatory Commission. Mr. Lynch may be contacted regarding this SER by telephone at 301-415-1524 or e-mail at Steven.Lynch@nrc.gov. Appendix C, "Principal Contributors," to this SER provides a listing of principal contributors, including areas of technical expertise and chapters of authorship.

1.2 Summary and Conclusions on Principal Safety Considerations

The staff evaluated descriptions and discussions of the IF and RPF, including probable subjects of technical specifications, as described in the SHINE PSAR and supplemented by the applicant's responses to RAIs. On the basis of its review, makes the following findings:

(1) Applicable standards and requirements of the Atomic Energy Act and Commission regulations have been met.

(2) Acceptance criteria in or referenced in NUREG-1537 or the ISG Augmenting NUREG-1537 have been satisfied.

(3) Required notifications to other agencies or bodies related to this licensing action have been duly made.

(4) The design of the facility includes adequate margins of safety and there is reasonable assurance that the final design will conform to the design basis.

(5) There is reasonable assurance that the facility can be constructed in conformity with the permit, the provisions of the Atomic Energy Act, and the Commission's regulations.

(6) SHINE has considered the expected consequences of several postulated accidents. The staff has performed conservative analyses of the most serious, hypothetically credible and non-credible accidents and determined that the calculated potential radiation doses outside the facility site are not likely to exceed the guidelines of 10 CFR Part 20, "Standards for Protection Against Radiation." Furthermore, SSCs have been designed to provide for the prevention of accidents and the mitigation of consequences of accidents.

(7) Releases of radioactive materials and wastes from the facility are not expected to result in concentrations outside the limits specified by 10 CFR Part 20, Subpart D, Radiation Dose Limits for Individual Members of the Public," and are as low as is reasonably achievable (ALARA).

(8) The financial data demonstrate that SHINE is qualified to engage in the construction of its proposed facility in accordance with the Commission's regulations.

(9) The preliminary emergency plan provides reasonable assurance that SHINE will be prepared to assess and respond to emergency events.

(10) The application presents information at a level of detail that is appropriate for general familiarization and understanding of the proposed facility.

(11) The application describes the relationship of specific facility design features to the major processes that will be ongoing at the facility. This description includes the building locations of major process components; drawings illustrating the layout of the buildings and structures within the controlled area boundary are used for the description.

(12) The application describes the major chemical or mechanical processes involving licensable quantities of radioactive material based, in part, on integrated safety analysis (ISA) methodology. This description includes the building locations of major process components and brief accounts of the process steps.

(13) Issuance of the construction permit will not be inimical to the common defense and security or to the health and safety of the public.

Therefore, the staff finds that the preliminary design and analysis of the SHINE IF and RPF, as described in the SHINE PSAR, is sufficient and meets the applicable regulatory requirements and guidance for the issuance of a construction permit in accordance with 10 CFR 50.35.

Further technical or design information required to complete the safety analysis may reasonably be left for later consideration. Appendix A to this SER identifies certain permit conditions that the staff recommends the Commission include, if the construction permit is issued. Additionally, Appendix A contains a listing of those elements of design, analysis, and administration identified as requiring additional research and development or correction by the applicant through its Issues Management Report System. The staff has determined that while resolution of these items is not necessary for the issuance of a construction permit, it is the responsibility of the applicant to ensure that these items have been full addressed in the FSAR supporting the issuance of an operating license. The staff is tracking these items as regulatory commitments and will verify their implementation during the review of SHINE's operating license application.

However, the staff has determined that additional information is needed to address certain matters related to nuclear criticality safety and radiation protection in the RPF. Accordingly, the staff is proposing that the construction permit be conditioned upon SHINE providing information related to nuclear criticality safety and radiation protection, as described in Appendix A of this SER. The proposed conditions of the construction permit are confirmatory in nature and must be satisfied prior to the completion of construction. Additional details on the basis for each condition appear in the technical evaluations SER Chapters 6, "Engineered Safety Features," and 11, "Radiation Protection Program and Waste Management."

On the basis of these findings as documented in this SER, the staff recommends that the Commission make the following conclusions for the issuance of a construction permit in accordance with 10 CFR 50.35, 50.40, and 50.50:

(1) SHINE has described the proposed design of the facility, including, but not limited to, the principal architectural and engineering criteria for the design, and has identified the major features or components incorporated therein for the protection of the health and safety of the public.

(2) Further technical or design information required to complete the safety analysis, which can reasonably be left for later consideration, will be supplied in the FSAR.

(3) Safety features or components that require research and development have been described by SHINE and a research and development program will be conducted that is reasonably designed to resolve any safety questions associated with such features or components.

(4) On the basis of the foregoing, there is reasonable assurance that: (i) such safety questions will be satisfactorily resolved at or before the latest date stated in the application for completion of construction of the proposed facility, and (ii) taking into consideration the site criteria contained in 10 CFR Part 100, the proposed facility can be constructed and operated at the proposed location without undue risk to the health and safety of the public.

(5) There is reasonable assurance: (i) that the construction of the SHINE facility will not endanger the health and safety of the public, and (ii) that construction activities can be conducted in compliance with the Commission's regulations.

(6) SHINE is technically qualified to engage in the construction of its proposed facility in accordance with the Commission's regulations.

(7) SHINE is financially qualified to engage in the construction of its proposed facility in accordance with the Commission's regulations.

(8) The issuance of a permit for the construction of the facility would not be inimical to the common defense and security or to the health and safety of the public.

(9) After weighing the environmental, economic, technical and other benefits of the facility against environmental and other costs and considering reasonable available alternatives, the issuance of this construction permit, subject to the conditions for protection of the environment set forth herein, is in accordance with Subpart A, "National Environmental Policy Act—Regulations Implementing Section 102(2)," of 10 CFR Part 51 of the Commission's regulations and all applicable requirements have been satisfied.

(10) The application meets the standards and requirements of the Atomic Energy Act and the Commission's regulations, and that notifications to other agencies or bodies have been duly made.

1.3 General Description

The staff evaluated the sufficiency of the general description of the SHINE facility, as presented in SHINE PSAR Section 1.3, "General Description of the Facility," in part, by reviewing the geographical location of the facility; principal characteristics of the site; principal design criteria, operating characteristics, and safety systems; thermal power level; engineered safety features; instrumentation control, and electrical systems; coolant and other auxiliary systems; radioactive waste management provisions; radiation protection; the general arrangement of major structures and equipment; safety features of special interest; and novel facility design considerations using the guidance and acceptance criteria from Section 1.3, "General Description," of NUREG-1537, Parts 1 and 2.

SHINE identifies itself as a Wisconsin corporation, a private organization that was created for the purpose of designing, constructing, and operating a medical radioisotope production facility which will be located on previously undeveloped agricultural property in Rock County, Wisconsin, approximately 1 mile south of the corporate boundaries the City of Janesville. SHINE developed a new method for producing Mo-99 using accelerator-driven neutron sources to induce fission in LEU within a subcritical operating assembly, creating Mo-99 as a byproduct.

The SHINE medical radioisotope production facility consists of an IF and RPF. The IF would consist of eight subcritical operating assemblies (or IUs), which would each be licensed as utilization facilities as defined in 10 CFR Section 50.2. The RPF would consist of three hot cell structures, licensed collectively as a production facility, as defined in 10 CFR 50.2.

The IUs operate as subcritical operating assemblies in a batch mode with an approximate week-long operating cycle. Each IU consists of a neutron driver assembly, a subcritical assembly system, a light water pool system, a target solution vessel (TSV) off-gas system, and other supporting systems. The RPF also operates in a batch mode, and consists of the following processes dedicated to the extraction, purification, and packaging of Mo-99 for the end users, as well as preparing the target solution for the IU:

- Target solution preparation system (TSPS).
- Molybdenum extraction and purification system (MEPS).

- Uranyl nitrate conversion system (UNCS).
- Noble gas removal system (NGRS).
- Process vessel vent system (PVVS).
- Radioactive liquid waste evaporation and immobilization (RLWE).
- Aqueous radioactive liquid waste storage (RLWS).
- Organic liquid waste storage and export (OLWS).
- Molybdenum isotope product packaging system (MIPS).
- Radioactive drain system (RDS).

In order to produce Mo-99, first, the uranyl sulfate solution is prepared from recycled materials and/or from raw feed materials in the RPF. The target solution is then transferred to the TSVs within the IF. Once the target solution is in the TSV, the subcritical assembly is operated at full power for approximately 5.5 days, at which time the IU is shut down and the irradiated target solution is transferred to the RPF for radioisotope extraction. Following initial extraction, the Mo-99 is purified and packaged for shipment to customers. The remaining target solution is then prepared for further irradiation in the IUs.

As described in greater detail in subsequent chapters, the design of the SHINE facility includes engineered safety features to mitigate design basis events or accidents; control and protection systems; a Class 1E uninterruptable electrical power supply; primary cooling; ventilation; equipment and processes related to handling and storage of target solution, byproduct material, and special nuclear material (SNM); a tritium purification system; and fire protection systems. SHINE has a radioactive waste management program and a radiation protection program.

1.4 Shared Facilities and Equipment

The staff evaluated the sufficiency of the evaluation of shared facilities and equipment, as presented in SHINE PSAR Section 1.4, “Shared Facilities and Equipment,” using the guidance and acceptance criteria from Section 1.4, “Shared Facilities and Equipment,” of NUREG-1537, Parts 1 and 2. The acceptance criteria state that comparisons should show that the proposed facility would not exceed the safety envelope of similar facilities and that there should be reasonable assurance that radiological exposures of the public would not exceed the regulations and guidelines of the facility ALARA program.

Consistent with the review procedures of NUREG-1537, Part 2, Section 1.4, the staff confirmed that all facilities or equipment shared by the SHINE facility are discussed in the PSAR.

As stated, in part, in SHINE’s PSAR Section 1.4, “[t]he SHINE facility does not share any systems or equipment with facilities not covered by this report.” However, the SHINE facility building includes both the IF and RPF, which, while functionally separate, share some common systems.

The NRC staff finds that all facilities or equipment that will be shared by the SHINE facility represent new construction on previously undeveloped agricultural property. The interface between the IF and RPF, including common systems shared between these facilities, has been adequately analyzed in other chapters in the PSAR.

On the basis of its review, the staff has determined that the level of detail provided on shared facilities and equipment satisfies the applicable acceptance criteria of NUREG-1537, Part 2, Section 1.4, allowing the staff to make the following relevant findings:

(1) There are no facilities, systems, or equipment shared by the SHINE facility that are not covered in the SHINE PSAR.

(2) While the SHINE IF and RPF share a common building and several common systems (e.g., cooling and electrical systems), the applicant has shown that a malfunction or a loss of function of either of these facilities would not affect the operation of the other. Neither facility would be damaged as a result of a malfunction or a loss of function of the other and both facilities would maintain the capability to be safely shut down or maintained in a safe condition.

(3) Neither normal operation nor a loss of function of the IF or RPF would lead to uncontrolled release of radioactive material from the licensed facility to unrestricted areas, or in the event of release, the exposures are analyzed in SER Chapter 13, "Accident Analyses," and are found to be acceptable.

Therefore, the staff finds that the evaluation of shared facilities and equipment, as described in SHINE PSAR Section 1.4, is sufficient and meets the applicable regulatory requirements and guidance for the issuance of a construction permit in accordance with 10 CFR 50.35.

1.5 Comparison with Similar Facilities

The staff evaluated the sufficiency of the comparison of the SHINE facility with other similar facilities, as presented in SHINE PSAR Section 1.5, "Comparison with Similar Facilities," using the guidance and acceptance criteria from Section 1.5, "Comparison with Similar Facilities," of NUREG-1537, Parts 1 and 2.

Consistent with the review procedures of NUREG-1537, Part 2, Section 1.5, the staff confirmed that the characteristics of any facilities compared with the proposed facility were similar and relevant. The staff also verified that the operating history of licensed facilities cited by the applicant demonstrated consistently safe operation, use, and protection of the public.

As stated, in part, in SHINE PSAR Section 1.5.1, "Comparison of Physical Plant Equipment," "the SHINE facility uses new technology for the manufacture of medical radioisotopes. The IU, consisting of the neutron driver, subcritical assembly, light water pool, TOGS [target solution vessel off-gas system], and other supporting systems represent the new technology. As such, there are no similar facilities that compare to the IUs."

The premise of the SHINE technology is that the IUs will not be operated such that the effective neutron multiplication factor (k_{eff}) is greater than or equal to 1.0, a range for which nuclear reactors are designed, analyzed, and licensed to operate safely. Instead, the IUs will only operate in a minimally subcritical range of k_{eff}. To operate safely within this margin of subcriticality, the IUs are designed with several features of a nuclear reactor except that, by design, the TSVs have insufficient reactivity to sustain a chain reaction.

While the NRC staff concludes that the IUs represent new technology, the accelerator and neutron multiplier add sufficient external neutrons to the TSV to achieve a fission rate with a thermal power level comparable to non-power reactors typically licensed under 10 CFR Part 50

as utilization facilities.[1] Given this fission power, the IUs also have many safety considerations similar to those of non-power reactors, including the following:

- Provisions for removal of fission heat during operation.
- Consideration of decay heat generation after shutdown.
- Reactivity feedback mechanisms similar to non-power reactors.
- Control of fission gas release during operation and subsequent gas management engineering safety features.
- Control of radiolytic decomposition of water and generated oxygen and hydrogen gases.
- Control of fission product inventory buildup.
- Accident scenarios similar to non-power reactors, such as loss of coolant, reactivity additions, and release of fission products.

As such, given that SHINE's proposed IUs closely resemble non-power reactors, which are licensed as utilization facilities under 10 CFR Part 50, the NRC staff determined that it would be most appropriate to license SHINE's IUs as utilization facilities under 10 CFR Part 50. However, at the time of SHINE's initial application submission, the IUs could not be licensed as utilization facilities because they are not nuclear reactors. Therefore, while 10 CFR Part 50 would have been appropriate to apply from a technical and licensing review process standpoint, the IUs could not be licensed as utilization facilities under the current regulations.

The NRC staff also considered whether it should review SHINE's IUs under 10 CFR Part 70, "Domestic Licensing of Special Nuclear Material," which regulates the issuance of licenses to receive title to, own, acquire, deliver, receive, possess, use, and transfer special nuclear material (SNM). From a regulatory perspective, 10 CFR Part 70 could have been applied because SHINE will acquire, receive, possess, use, and transfer SNM. The requirements of 10 CFR Part 70, Subpart H, "Additional Requirements for Certain Licensees Authorized to Possess a Critical Mass of Special Nuclear Material," could also be applied because SHINE will possess a critical mass of SNM, and will engage in an activity that could significantly affect public health and safety.

However, the facilities conducting the types of activities typically regulated under 10 CFR Part 70, generally referred to as fuel cycle facilities, have a common objective of avoiding criticality by maintaining a significant margin from criticality under normal operating and accident conditions. Specifically, 10 CFR 70.61(d) calls for "… use of an approved margin of subcriticality for safety." SHINE's IUs have a proposed routine operating margin of subcriticality of less than what has been previously approved for other 10 CFR Part 70 licensees. This operating state more closely resembles the effective neutron multiplication factor of nuclear

[1] Non-power reactors currently licensed to operate by the NRC range in thermal power from 5 watts to 20 megawatts. In the past, the NRC has licensed 12 aqueous homogeneous reactors (AHRs) with thermal power levels ranging from 5 watts to 50 kilowatts. An AHR is similar to the SHINE target solution vessel in that both contain fissile material in an aqueous solution; the difference is that the target solution vessel has insufficient fissile material for a sustained chain reaction.

reactors than fuel cycle facilities. Because SHINE proposes to operate each IU in a manner similar to a nuclear reactor, the NRC staff determined that it would be most appropriate to use the regulations contained in 10 CFR Part 50 to perform its technical review of the IUs.

Therefore, on October 17, 2014 (79 FR 62329), the NRC issued a direct final rule, which became effective December 31, 2014, amending the definition of utilization facility in 10 CFR 50.2 to include SHINE's IUs, so that they could be licensed under 10 CFR Part 50:

> *Utilization facility* means:
>
> (1) Any nuclear reactor other than one designed or used primarily for the formation of plutonium or uranium-233 (U–233); or
>
> (2) An accelerator-driven subcritical operating assembly used for the irradiation of materials containing special nuclear material and described in the application assigned Docket Number 50–608.

The rulemaking allowed the NRC staff to conduct its licensing review of the proposed SHINE IUs following regulations designed for technologies with similar radiological, health, and safety considerations. Additionally, the rule does not affect the ability of the public to comment and request a hearing on the application; and the inclusion of SHINE's Docket Number as well as a description of the SHINE's IU technology limits the applicability of the rule to SHINE's proposed IUs, ensuring no impact to other existing or future facilities. If, in the future, any applicant proposes a technology similar to SHINE's IUs[2], the Commission would consider that application on a case-by-case basis, and assign a distinct Docket Number to each application. Should SHINE propose a technology other than the IUs currently described in its PSAR, the rule would no longer apply to SHINE, and the NRC staff would pursue an alternative licensing approach.

The SHINE RPF consists of hot cells used to process irradiated target solution for Mo-99 separation and purification. According to the SHINE PSAR Section 1.5.1, "[t]he hot cell design is conventional and is similar to the design used in many other facilities." The primary chemical processes occurring in the hot cells are molybdenum extraction, molybdenum purification, uranyl nitrate conversion, uranium extraction, evaporation and thermal denitration, waste evaporation and solidification, and tritium purification."

Regarding molybdenum extraction, there are currently no NRC or U.S. Department of Energy (DOE) facilities that use SHINE's specific process. However, SHINE cites the Site Ion Exchange Effluent Plant (SIXEP) in the United Kingdom, which uses clinoptilolite to remove cesium and strontium from aqueous process streams, as an example of a facility performing a similar process to SHINE's proposed molybdenum extraction.

According to a paper prepared by Aker Kvaerner Engineering Services, entitled, "Radio Active Waste Plants – Back to the Future," SIXEP has been in operation since 1985 and, "represents an early generation of Radwaste plant for the treatment of site magnox sourced liquid effluents, designed in the late 1970's, and based on the use of filtration and ion exchange."

With respect to the molybdenum purification process, SHINE states that its process is similar to the Cintichem process developed in the 1950s and 1960s by Union Carbide. Cintichem,

[2] At this time, the NRC staff does not anticipate receiving any other applications for medical radioisotope production facilities that would propose a technology similar to SHINE's IUs.

licensed by the NRC, operated until 1990 as means to purify Mo-99 for used as a medical radioisotope. The primary difference between SHINE's molybdenum purification process and that of Cintichem is a slight change in process chemistry to accommodate the change in chemical and isotopic composition due to the switch from highly-enriched uranium to LEU. Similar to Cintichem, shielding and confinement will serve as the principal engineered safety features designed to reduce worker doses associated with this activity at the SHINE facility.

As stated, in part, in SHINE PSAR Section 1.5.2.3, "Uranyl Nitrate Conversion," "[t]he conversion of uranyl sulfate to uranyl nitrate is necessary to enable fission products to be removed from the uranium, in order to recycle the uranium within the target solution loop. The conversion step for the uranyl sulfate is not currently used in any NRC or DOE facilities." However, the NRC staff notes that Argonne National Laboratory is conducting research for the SHINE project on the conversion of uranyl sulfate solution to uranyl nitrate solution for processing in uranium extraction (UREX), as presented at the Mo-99 Topical Meeting, hosted by Argonne National Laboratory in Washington, DC from June 24 through 27, 2014.

The SHINE UREX process is a modification of a widely-used uranium and plutonium separation and purification process known as plutonium and uranium extraction (PUREX). The PUREX process was developed in the late 1940s and uses tributyl phosphate (TBP) to selectively remove uranium and plutonium from a nitric acid solution typically containing a host of fission product and other actinide contaminants. SHINE lists the principal locations that either currently or have historically used the PUREX process:

a. Hanford, Washington
b. Savannah River Site, South Carolina
c. Idaho National Laboratory, Idaho
d. West Valley, New York
e. Radiochemical Engineering Development Center, Oak Ridge National Laboratory, Tennessee
f. Sellafield, United Kingdom
g. Mayak, Russia
h. AREVA La Hague site, France
i. Rokkasho, Japan

The staff notes that the PUREX process has traditionally been employed by fuel reprocessing facilities (i.e., Hanford, Savanna River and West Valley), in which irradiated fuel goes through dissolution, fission product and waste separation, and uranyl and plutonium nitrate purification. Despite similarities in process, the staff does not consider the SHINE RPF a fuel reprocessing facility. While the SHINE UREX process is similar to these facilities, unlike the traditional fuel reprocessing facilities, the UREX process used by SHINE will not be separating plutonium from its irradiated target solution.

There is currently neither a statutory nor regulatory definition for what does and does not constitute a fuel reprocessing facility. While fuel reprocessing plants are considered production facilities under 10 CFR Part 50, more specific definitions and interpretations of fuel reprocessing facilities have varied over the years, as evidenced in *Federal Register Notices*, staff-generated SECY Papers, and Nuclear Energy Institute white papers (see: http://www.nrc.gov/materials/reprocessing.html, "Additional Documents," and 39 FR 26293). In 2006, the Commission directed the Advisory Committee on Nuclear Waste and Materials (the Committee) to become knowledgeable in the area of spent nuclear fuel reprocessing and define the issues most important to the NRC concerning fuel reprocessing facilities. As a result, the

Committee published a white paper, NUREG-1909, "Background, Status, and Issues Related to the Regulation of Spent Nuclear Fuel Recycle Facilities," in June 2008, representing the only current regulatory guidance on this issue. In this white paper, the Committee describes "reprocessing" as the separation of spent nuclear fuel into its constituent components (pages xv and 152) [3].

As defined in 10 CFR 72.3, "Definitions," *spent nuclear fuel* or *spent fuel* means "fuel that has been withdrawn from a nuclear reactor following irradiation, has undergone at least one year's decay since being used as a source of energy in a power reactor, and has not been chemically separated into is constituent elements by reprocessing…"

Based on the definitions of spent nuclear fuel and reprocessing discussed above, it can be inferred that only fuel from a nuclear power reactor is considered spent nuclear fuel, and therefore, only fuel from a nuclear power reactor may undergo reprocessing. Since the SHINE RPF will only process the LEU target solution previously irradiated in the IF and will not be processing spent nuclear fuel, as defined in 10 CFR 72.3, the staff has concluded that the processing of SHINE's irradiated LEU target solution does not constitute fuel reprocessing. Therefore, the SHINE production facility is not a fuel reprocessing facility.

Regarding evaporation and thermal denitration, while there are no NRC-licensed uranyl nitrate evaporation and denitration facilities in operation, SHINE has identified fluidized bed thermal denitration performed at the previously identified PUREX facilities as a similar process.

SHINE cites the DOE Hanford site with submerged tube forced recirculation evaporator operational experience, as used at the SHINE facility. Construction of the Hanford site was completed in 1977, and the evaporator is anticipated to operate into at least the 2040s.

SHINE likens its tritium purification system with similar processes conducted at the Savannah River Site and Laboratory for Laser Energetics. However, in PSAR Section 1.5.2.7, "Tritium Purification System," SHINE states, in part, that "[d]ue to the sensitive and confidential nature of information relating to tritium production and purification, the design and operational details of these systems are not published. A comparison of the SHINE system with existing facilities is therefore not possible."

On the basis of its review, the staff has determined that the level of detail provided on comparisons with similar facilities satisfies the applicable acceptance criteria of NUREG-1537, Part 2, Section 1.5, allowing the staff to make the following findings:

(1) SHINE has compared the design bases and safety considerations with similar facilities, as practicable. The history of these facilities demonstrates consistently safe operation that is acceptable to the staff.

(2) Aspects of SHINE's design that are similar to features in other facilities that have been found acceptable to the staff, should be expected to perform in a similar manner when constructed to that design.

[3] This definition is also generally consistent with the description of reprocessing on the NRC's public webpage: "Reprocessing refers generally to the processes necessary to separate spent nuclear reactor fuel into material that may be recycled for use in new fuel and material that would be discarded as waste." (http://www.nrc.gov/materials/reprocessing.html).

(3) SHINE is using test data and operational experience in designing components and SHINE cited the actual facilities with similar components, as practicable.

Therefore, the staff concludes that the comparisons with similar facilities, as described in SHINE PSAR Section 1.5 is sufficient and meets the applicable regulatory requirements and guidance for the issuance of a construction permit consistent with 10 CFR 50.35.

1.6 Summary of Operations

The staff evaluated the sufficiency of the comparison of the SHINE Summary of Operations, as presented in SHINE PSAR Section 1.6, "Summary of Operations," using the guidance and acceptance criteria from Section 1.6, "Summary of Operations," of NUREG-1537, Parts 1 and 2.

Consistent with the review procedures of NUREG-1537, Part 2, Section 1.6, the staff verified that proposed operations of the SHINE facility had been summarized.

The SHINE facility is capable of producing up to 8200 6-day curies of Mo-99 per week. SHINE listed the major operations to be performed in the SHINE facility for this Mo-99 production as follows:

- Target solution preparation from raw feed material (uranium metal).
- Target solution preparation from irradiated and processed target solution.
- Irradiation of target solution.
- Mo extraction from irradiated target solution.
- Mo purification.
- Target solution processing (cleanup).

As described above in SER Section 1.3, "General Description," the uranyl sulfate solution is prepared from recycled materials and/or from raw feed materials in the RPF. The target solution is then transferred to the TSVs within the IF. Once the target solution is in the TSV, the subcritical assembly is operated at full power for approximately 5.5 days, at which time the IU is shut down and the irradiated target solution is transferred to the RPF for radioisotope extraction. Following initial extraction, the Mo-99 is purified and packaged for shipment to customers. The remaining target solution is then prepared for further irradiation in the IUs.

On the basis of its review, the staff has determined that the level of detail provided on comparisons with similar facilities satisfies the applicable acceptance criteria of NUREG-1537, Part 2, Section 1.6. The staff also finds that the proposed operating conditions and schedules are consistent with the design features of the facility and have been found acceptable to the staff. The proposed operations are consistent with the relevant assumptions in later chapters of the PSAR, in which any safety implications of the proposed operations are evaluated.

Therefore, the staff concludes that the summary of operations, as described in SHINE PSAR Section 1.6 is sufficient and meets the applicable regulatory requirements and guidance for the issuance of a construction permit in accordance with 10 CFR 50.35. Further technical or design information required to complete the safety analysis may reasonably be left for later consideration.

1.7 Compliance with the Nuclear Waste Policy Act of 1982

The Nuclear Waste Policy Act provides that the U.S. government is responsible for the permanent disposal of high-level radioactive waste and spent nuclear fuel, but the cost of disposal should be the responsibility of the generators and owners of such waste and spent fuel. The staff evaluated the sufficiency of SHINE's compliance with the Nuclear Waste Policy Act of 1982 (Reference 33), as presented in SHINE PSAR Section 1.7, "Compliance with the Nuclear Waste Policy Act," using the guidance and acceptance criteria from Section 1.7, "Compliance with the Nuclear Waste Policy Act of 1982," of NUREG-1537, Parts 1 and 2.

As stated in SHINE PSAR Section 1.7, the SHINE facility does not produce either high-level nuclear wastes or spent nuclear fuel. Therefore, the Nuclear Waste Policy Act of 1982 is not applicable to this facility. As described in PSAR Chapter 11, "Radiation Protection Program and Waste Management," SHINE has identified commercial disposition pathways for all of its radioactive waste.

As described in the American Medical Isotopes Production Act (42 U.S.C. 2065(f)), radioactive material resulting from the production of medical radioisotopes that has been permanently removed from a reactor or subcritical assembly, and for which there is no further use, is deemed to be low-level radioactive waste if it is acceptable under federal requirements for disposal as low-level radioactive waste. Since SHINE will be removing radioactive material resulting from the production of medical radioisotopes in a subcritical assembly, the staff has determined that the SHINE facility will produce low-level radioactive waste and will not produce high-level nuclear wastes. As discussed in Chapter 11, "Radiation Protection and Waste Management," of this SER, SHINE has committed to following applicable NRC, DOE, and U.S. Department of Transportation regulations for disposal of its radioactive waste. Additionally, SHINE has identified licensed commercial disposal sites that can take receipt and dispose of the facility's solid radioactive waste. The staff finds SHINE's plans for handling radioactive waste demonstrate appropriate consideration of regulatory requirements for the types of waste at the facility. Further evaluation of SHINE's plans for handling radioactive waste will occur in the review of SHINE's FSAR.

As defined in 10 CFR 72.3, *spent nuclear fuel* or *spent fuel* means "fuel that has been withdrawn from a nuclear reactor following irradiation, has undergone at least one year's decay since being used as a source of energy in a power reactor, and has not been chemically separated into its constituent elements by reprocessing…." Since SHINE will only be removing its target solution from subcritical assemblies, and not be constructing and operating a nuclear power reactor from which fuel will be removed, the staff has determined that the SHINE facility will not produce spent nuclear fuel.

Therefore, since SHINE will not be producing spent nuclear fuel or high-level nuclear wastes, the Nuclear Waste Policy Act of 1982 is not applicable to this facility.

The staff notes that a provision of the American Medical Isotopes Production Act of 2012 (42 U.S.C. 2065(c)(3)(A)(ii)) states that DOE would take title to, and be responsible for, the final disposition of radioactive waste created by the irradiation, processing, or purification of uranium leased from DOE for medical radioisotope production, if it determines that the producer (e.g., SHINE) does not have access to a disposal path. For example, if a disposal pathway for Greater-Than-Class C Low-Level Radioactive Waste does not exist, DOE will be responsible for its disposal.

Chapter 11 of the SHINE PSAR describes SHINE's proposed radioactive waste management program, radioactive waste controls, and release of radioactive waste.

Therefore, the staff concludes that SHINE's description of the applicability of the Nuclear Waste Policy Act of 1982 in Section 1.7 of the SHINE PSAR is sufficient, and meets the applicable regulatory requirements and guidance for the issuance of a construction permit in accordance with 10 CFR 50.35.

1.8 Facility Modifications and History

The staff evaluated the sufficiency of SHINE's descriptions of facility modifications and history, as presented in SHINE PSAR Section 1.8, "Facility Modifications and History," using the guidance and acceptance criteria from Section 1.8, "Facility Modifications and History," of NUREG-1537, Parts 1 and 2.

As stated in SHINE PSAR Section 1.8, "[t]his report is an application for construction of the SHINE facility. As there are no existing facilities, there have been no modifications, and there is no history to report. Therefore, this section is not applicable to the SHINE facility."

The staff has determined that there are no existing facilities, there have been no modifications, and there is no history to report on the SHINE facility. Therefore, this section is not applicable to this facility.

Therefore, the staff concludes that SHINE's description of facility modifications and history, as described in SHINE PSAR Section 1.8, is sufficient and meets the applicable regulatory requirements and guidance for the issuance of a construction permit in accordance with 10 CFR 50.35.

2.0 SITE CHARACTERISTICS

The principal purpose of this chapter of the SHINE Medical Technologies, Inc. (SHINE or the applicant) construction permit safety evaluation report (SER) is to describe why the site selected is suitable for constructing and operating the SHINE facility.

This chapter of the SHINE construction permit SER describes the technical review and evaluation of the U.S. Nuclear Regulatory Commission (NRC) staff' (the staff) of the preliminary design of the SHINE irradiation facility (IF) and radioisotope production facility (RPF) site characteristics as presented in Chapter 2, "Site Characteristics," of the SHINE Preliminary Safety Analysis Report (PSAR), as supplemented by the applicant's responses to requests for additional information (RAIs).

SER Chapter 2, "Site Characteristics," provides an evaluation of SHINE's site selection as presented in SHINE PSAR Sections 2.1, "Geography and Demography;" 2.2, "Nearby Industrial, Transportation, and Military Facilities;" 2.3, "Meteorology;" 2.4, "Hydrology;" 2.5, "Geology, Seismology, and Geotechnical Engineering;" and 2.6, "References."

2.1 Areas of Review

SHINE PSAR Sections 2.1 through 2.6 provide the bases for the site selection and describe the applicable site characteristics, including geography, demography, meteorology, hydrology, geology, seismology, and interaction with nearby installations and facilities. The SHINE site comprises two major facilities, the IF and the RPF. Both facilities are collocated on a single site.

The staff reviewed SHINE PSAR Sections 2.1 through 2.6 against applicable regulatory requirements using appropriate regulatory guidance and standards to assess the sufficiency of the site selection for the SHINE facility. As part of this review, the staff reviewed and evaluated descriptions and discussions of SHINE's bases for the site selection.

Areas of review for this section included the following:

- The geography and demography descriptions of the site area and facility location used to assess the acceptability of the SHINE site.

- The description of locations and routes where potential external hazards or hazardous materials present or may reasonably be expected to be present during the projected lifetime of the SHINE site.

- The description of averages and extremes of climatic conditions and regional meteorological phenomena that could affect the safe design and siting of the SHINE site.

- The description of the SHINE site and safety-related elevations, structures, and systems from the standpoint of hydrologic considerations including the topographic map showing the proposed changes to grading and to natural drainage features.

2.2 Summary of Application

As stated above, the SHINE site contains two major facilities, the IF (consisting of eight irradiation units) and the RPF. Both facilities are to be collocated in a single building on the site.

The SHINE site will be located on agricultural property in the City of Janesville, Rock County, Wisconsin. The SHINE site will be located on the south side of the City of Janesville corporate boundaries, and the densely populated parts of the city are more than 1 mile (mi) (1.6 kilometers [km]) to the north. Approximately 3.7 mi (6.0 km) to the south of the SHINE site is the northern city limits of the City of Beloit, Wisconsin, and approximately 60 mi (96.6 km) east of the SHINE site is Lake Michigan. The SHINE site is centered at 42° 37' 26.9" north latitude, and 89° 1' 29.5" west longitude. The City of Janesville, relative to the City of Milwaukee, Wisconsin and the City of Chicago, Illinois is shown in Figure 2.1-1.

The site boundaries encompass approximately 91 acres (36.8 hectares) of land. The finished site grade elevation is approximately 827 feet (ft) (252 meters [m]) per the North American Vertical Datum of 1988. The SHINE site and adjacent ground within a radius of approximately 1.6 km (1 mi) is generally flat. The area surrounding the site is rural, with most land used for agriculture (about 83 percent of Rock County is farmland). The general site location is shown in Figure 2.2-2.

The area within 8 km (5 mi) of the SHINE site supports a population estimated to be about 43,000 people, who mostly live north of the SHINE site in and around the City of Janesville, Wisconsin. Specifically, most of the population is located north-northwest (within 1 km [0.6 mi]) or northwest (1 to 2 km [0.6 to 1.2 mi]) of the SHINE site; while further from the site (4 to 8 km [2.5 to 5 mi]), most of the population is located north of the SHINE site, in and around the City of Janesville.

SHINE estimated the 2050 population surrounding the SHINE site at about 67,000 persons (about a 36-percent increase from the 2010 population), with the largest percentage (at about 70 percent) of increases occurring south of the site.

The total 2013 population of the City of Janesville was about 63,600 people, although a portion of that population lives outside of an 8 km (5 mi) radius from the site.

The nearest permanent residence is located approximately 0.80 km (0.50 mi) northwest of the center of the SHINE site. There are permanent residences in two other directions that are only slightly farther away; a house located approximately 0.86 km (0.54 mi) north-northwest of the center point and a house located approximately 0.94 km (0.59 mi) to the south-southwest. In the SHINE PSAR, the joint frequency data indicate that the prevailing wind direction is from the west followed by the south, and that wind is from the north-northeast the least. A resident living downwind of prevailing wind (i.e., east or north of the site) could be most affected by SHINE's operation. The nearest resident in the easterly direction is located 1.2 km (0.73 mi) to the east-northeast, while to the north the nearest resident is also 1.2 km (0.73 mi) from the SHINE site.

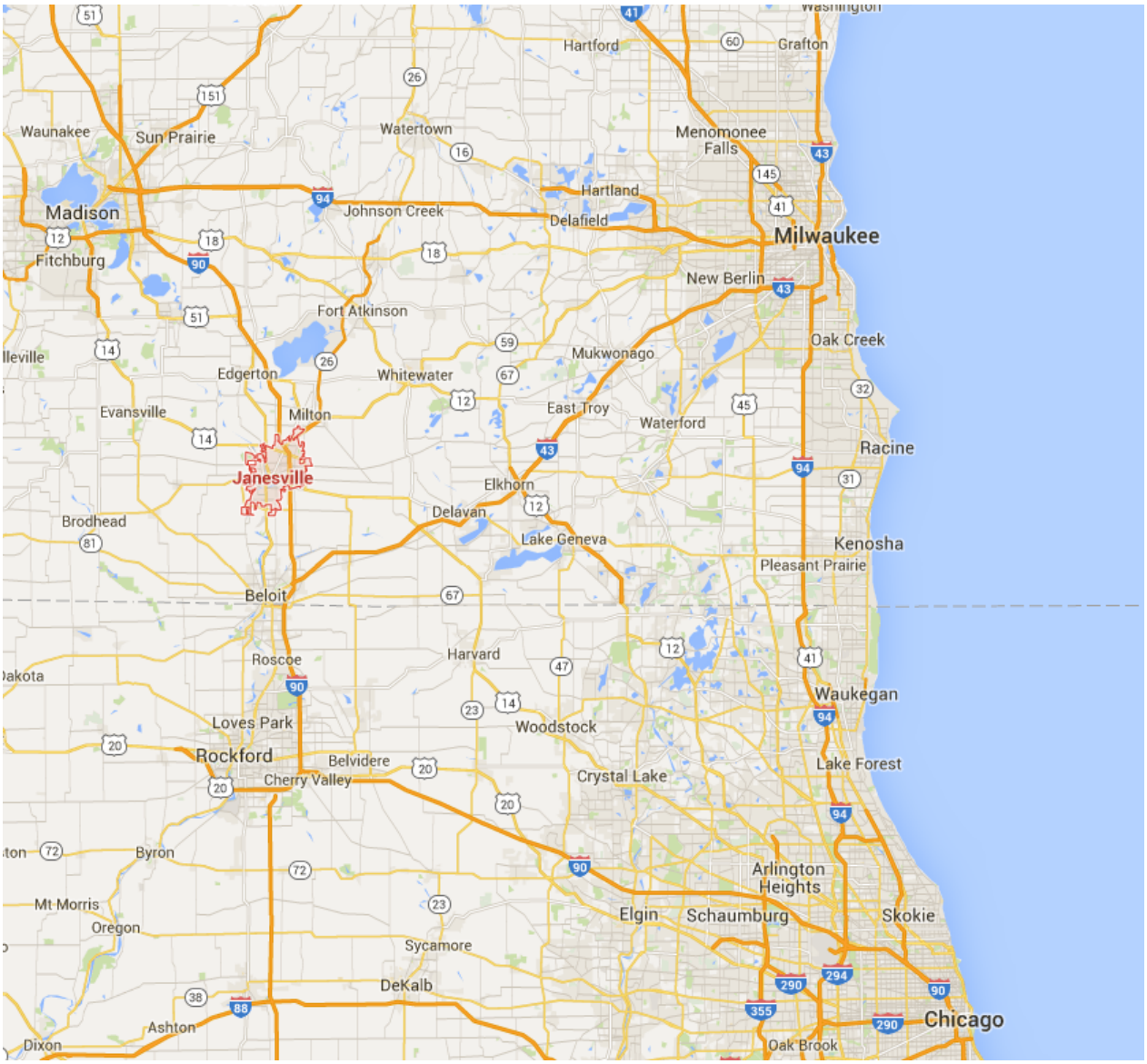

Figure 2.1-1. City of Janesville

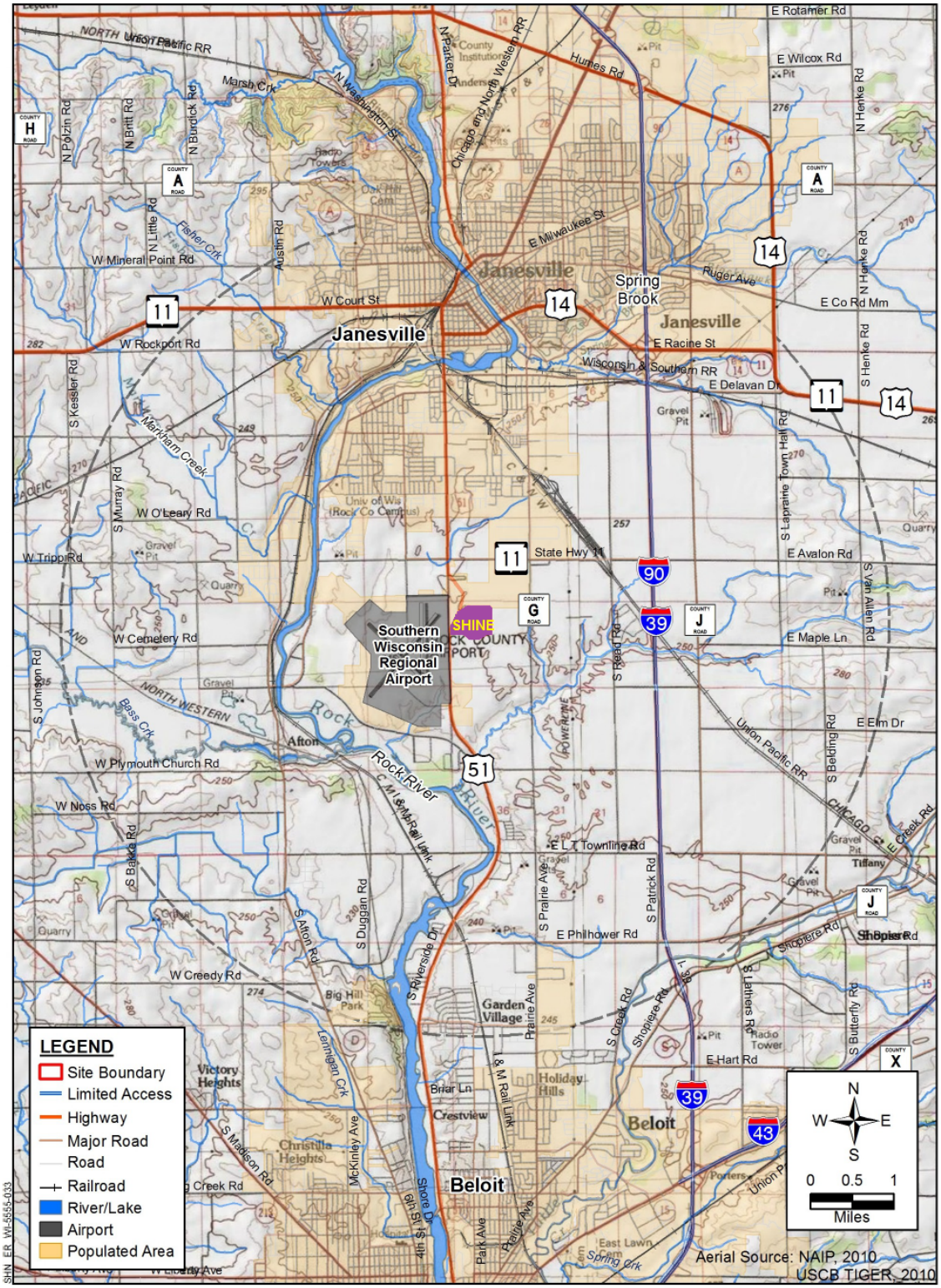

Note: North arrow indicates true north.

Figure 2.2-2. SHINE Facility — General Location Map

In addition to the permanent residents around the SHINE site, there are people who enter this area temporarily for activities such as employment, education, recreation, medical care, and lodging. SHINE estimated a 2010 total transient population of about 27,600 persons. Most of the transient population is either in education (approximately 54 percent) or employment (approximately 36 percent). SHINE also estimated a 2010 total weighted transient population of about 8,100 persons.

There are several major industrial and transportation facilities located within 8 km (5 mi) of the SHINE site. These include industrial facilitates, pipelines, highways, railroads, and an airport, which are shown in Figure 2.2-3.

- Industrial Facilities
  - Abitec Corporation
  - Crop Production Services
  - Evonik Goldschmidt Corporation
  - Janesville Jet Center
  - School District of Beloit Turner
  - Seneca Foods Corporation
  - Simmons Manufacturing Co
  - United Parcel Service
- Pipelines
  - Alliant Energy Natural Gas Pipelines
  - ANR Natural Gas Pipeline
- Highways
  - Interstate I-90/39
  - U.S. Highways 14 and 51
  - Wisconsin State Routes 11 and 26
- Railroads
  - Union Pacific Railroad
  - Canadian Pacific Railroad
  - Wisconsin & Southern Railroad
- Airports
  - Southern Wisconsin Regional Airport
  - Mercy Hospital Heliport

There are no major military facilities located within 8 km (5 mi) of the SHINE site, although military aircraft do sometimes utilize the Southern Wisconsin Regional Airport (SWRA).

A small percentage of Rock County is industrial, with the majority of industries in the larger cities of Janesville and Beloit. The only planned industrial growth identified within 8 km (5 mi) of the SHINE site is expansion of the SWRA. The airport plans to expand runways away from US 51. The airport operations are not expected to grow significantly. The Janesville and Beloit Comprehensive Plans do not provide details of any planned industrial growth.

SHINE PSAR Section 2.2.2, “Air Traffic,” discusses air traffic located within 10 mi (16 km) of the SHINE facility (distance from the center of the SHINE site to the nearest edge of the airway). SHINE also describes its analysis of aircraft hazards associated with these airways, including approach and holding patterns near its proposed facility. SHINE PSAR Section 2.2.3, “Analysis of Potential Accidents at Facilities,” describes the analysis of postulated accidents and possible effects that could occur at the SHINE facility, including explosions, flammable vapor clouds, toxic chemicals, and fires.

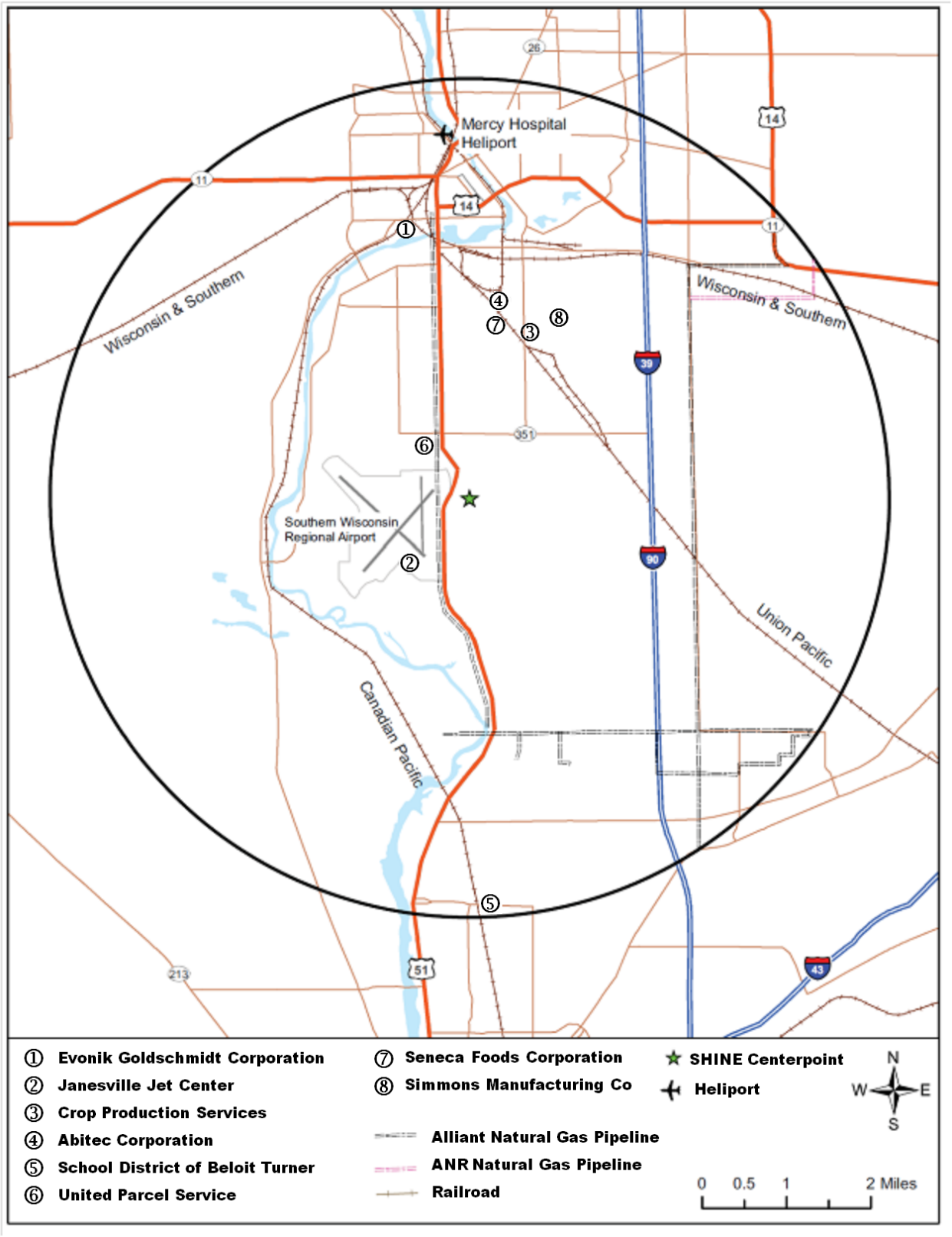

Figure 2.2-3. Nearby Industrial and Transportation Facilities

SHINE PSAR Section 2.3 describes the general and local climate, including historical averages and extremes of climatic conditions and regional metrological phenomena. The SHINE site is

located in a region with the Köeppen classification, which is a humid continental climate with warm summers, snowy winters, and humid conditions. The climate features a large annual temperature range and frequent short duration temperature changes. Although there are no pronounced dry seasons, most of the annual precipitation falls during the summer. During the autumn, winter, and spring, strong synoptic scale surface cyclones and anticyclones frequently move across the site region. During the summer, synoptic scale cyclones are usually weaker and pass north of the site region. Most air masses that affect the site region are generally of polar origin; however, air masses occasionally originate from arctic regions, or the Gulf of Mexico. Air masses originating from the Gulf of Mexico generally do not reach the site region during winter months. There are occasional episodes of extreme heat or high humidity in the summer. The windiest months generally occur during the spring and autumn. The annual average number of days with thunderstorms varies from approximately 45 days at the southwest corner of the state of Wisconsin, to approximately 35 days at the northeast corner of the state. Hail is most frequent in the southwestern and west central portions of the state, and is most common during summer months, peaking in late July. Tornadoes are relatively infrequent. Winter storms that affect the region generally follow one of three tracks: Alberta, Panhandle, or Gulf Coast. During an average winter, the ground is covered with snow about 60 percent of the time. In addition, the applicant also discusses the potential meteorological effects to the SHINE facility and discusses the dispersion analysis of airborne releases, in both restricted and unrestricted areas, from routine releases during normal operations and from postulated releases resulting from accidents.

SHINE PSAR Section 2.4.1, “Hydrological Description,” identifies the SHINE site surface water, groundwater aquifers, types of on-site groundwater use, sources of recharge, present known withdrawals and likely future withdrawals, flow rates, travel time, gradients, and other properties that affect movement of accidental contaminants in groundwater, groundwater levels beneath the site, seasonal and climatic fluctuations, monitoring and protection requirements, and man-made changes that have the potential to cause long-term changes in local groundwater regime.

In SHINE PSAR Section 2.4.2, “Floods,” the applicant indicates that flooding near the proposed SHINE site is very unlikely to be caused by local intense precipitation or by the Rock River or unnamed tributary overflowing their banks. The applicant describes its analysis of the potential flooding from other natural events, including surges, seiches, tsunami, dam failures, flooding caused by landslides, and effects of ice formation on water bodies. The applicant notes that the Rock River and the unnamed tributary stream are subject to flooding throughout the year. The largest potential for flooding occurs during the spring as a result of precipitation and snow melt. Peak flows occur during the winter and are primarily caused by ice jams.

SHINE PSAR Section 2.5.1, “Regional Geology,” describes the regional geology within about 322 km (200 mi) of the proposed site, including regional physiography and geomorphology; tectonic provinces and structures within the basement rocks; bedrock geology including stratigraphy, lithology, and structure; magnetic and gravity geophysical anomalies; and surficial geology and glacial history. SHINE PSAR Section 2.5.2, “Site Geology,” describes the geology within about 8 km (5 mi) of the proposed site. Specifically, this section describes the stratigraphy and depth to bedrock, structural geology, site soils conditions, and non-seismic geological hazards. SHINE PSAR Section 2.5.3, “Seismicity,” describes the regional geology within about 322 km (200 mi) of the proposed site, including historic earthquakes and felt intensities. SHINE PSAR Section 2.5.4, “Maximum Earthquake Potential,” describes the historical maximum expected moment magnitude from past earthquakes, and frequency of occurrence. SHINE PSAR Section 2.5.5, “Vibratory Ground Motion,” presents an evaluation of

the earthquake ground shaking expected at the proposed site. Because most of the regional geological structures are not considered to be seismically capable, the analysis of earthquake ground shaking at the proposed site is based on interpolation of the national seismic hazard model. The development of an earthquake ground motion design response spectrum follows the procedures set out in the structural codes and standards applicable to Wisconsin. SHINE PSAR Section 2.5.6, "Surface Faulting," presents an evaluation of the earthquake ground shaking expected at the proposed site. Because most of the regional geological structures are not considered to be seismically capable, the analysis of earthquake ground shaking at the site is based on interpolation of the national seismic hazard model. The development of an earthquake ground motion design response spectrum follows the procedures set out in the structural codes and standards applicable to Wisconsin. SHINE PSAR Section 2.5.7, "Liquefaction Potential," describes the liquefaction potential within the proposed site.

2.3 Regulatory Basis and Acceptance Criteria

The staff reviewed SHINE PSAR Chapter 2 against applicable regulatory requirements, using regulatory guidance and standards, to assess the sufficiency of the bases and the information provided by SHINE for the selection of the SHINE site for the issuance of a construction permit. In accordance with paragraph (a) of Title 10 of the *Code of Federal Regulations* (10 CFR) 50.35, "Issuance of construction permits," a construction permit authorizing SHINE to proceed with construction may be issued once the following findings have been made:

(1) SHINE has described the proposed design of the facility, including, but not limited to, the principal architectural and engineering criteria for the design, and has identified the major features or components incorporated therein for the protection of the health and safety of the public.

(2) Such further technical or design information as may be required to complete the safety analysis, and which can reasonably be left for later consideration, will be supplied in the final safety analysis report (FSAR).

(3) Safety features or components, if any, which require research and development have been described by SHINE and a research and development program will be conducted that is reasonably designed to resolve any safety questions associated with such features or components.

(4) On the basis of the foregoing, there is reasonable assurance that: (i) such safety questions will be satisfactorily resolved at or before the latest date stated in the application for completion of construction of the proposed facility, and (ii) taking into consideration the site criteria contained in 10 CFR Part 100, "Reactor Site Criteria," the proposed facility can be constructed and operated at the proposed location without undue risk to the health and safety of the public.

With respect to the last of these findings, the staff notes that the requirements of 10 CFR Part 100 are specific to nuclear power reactors, and therefore not applicable to the SHINE facility. However, the staff evaluated SHINE's site specific conditions using site criteria similar to 10 CFR Part 100, by using the guidance in NUREG-1537, Part 1, "Guidelines for Preparing and Reviewing Applications for the Licensing of Non-Power Reactors, Format and Content," issued February 1996 (Reference 4) and NUREG-1537, Part 2, "Guidelines for Preparing and Reviewing Applications for the Licensing of Non-Power Reactors, Standard Review Plan and Acceptance Criteria," issued February 1996 (Reference 5). The staff's review

evaluated the geography and demography of the site; nearby industrial, transportation, and military facilities; site meteorology; site hydrology; and site geology, seismology, and geotechnical engineering to ensure that issuance of the construction permit will not be inimical to public health and safety. The staff's review evaluated structures, components, equipment, and systems designed to ensure safe operation, performance, and shutdown when subjected to extreme weather, floods, seismic events, missiles (including aircraft impacts), chemical and radiological releases, and loss of offsite power.

2.3.1 Applicable Regulatory Requirements

The applicable regulatory requirements for the evaluation of the SHINE site characteristics are as follows:

- 10 CFR 50.34, "Contents of applications; technical information," paragraph (a), "Preliminary safety analysis report."

2.3.2 Regulatory Guidance and Acceptance Criteria

In applying guidance and acceptance criteria, the staff used its judgment as to which acceptance criteria were relevant to SHINE's proposed facility, as much of this guidance was originally developed for nuclear reactors. Given the similarities in SHINE's proposed facility and non-power research reactors, the staff used established guidance documents and the Commission's regulations to determine the acceptance criteria for demonstrating compliance with 10 CFR regulatory requirements. For example, the staff used the following:

- NUREG-1537, Part 1, "Guidelines for Preparing and Reviewing Applications for the Licensing of Non-Power Reactors, Format and Content."

- NUREG-1537, Part 2, "Guidelines for Preparing and Reviewing Applications for the Licensing of Non-Power Reactors, Standard Review Plan and Acceptance Criteria."

- "Final Interim Staff Guidance [ISG] Augmenting NUREG-1537, Part 1, 'Guidelines for Preparing and Reviewing Applications for the Licensing of Non-Power Reactors: Format and Content,' for Licensing Radioisotope Production Facilities and Aqueous Homogeneous Reactors," dated October 17, 2012 (Reference 6).

- "Final Interim Staff Guidance Augmenting NUREG-1537, Part 2, 'Guidelines for Preparing and Reviewing Applications for the Licensing of Non-Power Reactors: Standard Review Plan and Acceptance Criteria,' for Licensing Radioisotope Production Facilities and Aqueous Homogeneous Reactors," dated October 17, 2012 (Reference 7).

As stated in the ISG Augmenting NUREG-1537, the staff determined that certain guidance originally developed for heterogeneous non-power research and test reactors is applicable to aqueous homogenous facilities and production facilities. SHINE used this guidance to inform the design of its facility and prepare its PSAR. The staff's use of reactor-based guidance in its evaluation of the SHINE PSAR is consistent with the ISG Augmenting NUREG-1537.
As appropriate, additional guidance (e.g., NRC regulatory guides, Institute of Electrical and Electronics Engineers (IEEE) standards, American National Standards Institute/American Nuclear Society (ANSI/ANS) standards) has been used in the staff's review of SHINE's PSAR. The use of additional guidance is based on the technical judgment of the reviewer, as well as

references in NUREG-1537, Parts 1 and 2; the ISG Augmenting NUREG-1537, Parts 1 and 2; and the SHINE PSAR. Additional guidance documents used to evaluate SHINE's PSAR are provided as references in Appendix B, "References," of this SER.

2.4 Review Procedures, Technical Evaluation, and Evaluation Findings

SHINE PSAR Chapter 2 discusses the SHINE site characteristics including the geographical, geological, seismological, hydrological, and meteorological characteristics of the site and the vicinity in conjunction with present and projected population distributions, industrial facilities and land use, and site activities and controls. The staff's review of the SHINE site considers the site characteristics; design and analyses of structures, systems, and components; radiation protection and waste management programs; and accident analyses.

The staff performed an evaluation of the technical information presented in SHINE PSAR Chapter 2, as supplemented by the applicant's responses to RAIs, to assess the sufficiency of SHINE's site characteristics for the issuance of a construction permit, in accordance with 10 CFR 50.35. The sufficiency of the preliminary design and performance of the SHINE facility site characteristics is determined by ensuring the design and performance meet applicable regulatory requirements, guidance, and acceptance criteria, as discussed in Section 2.3, "Regulatory Basis and Acceptance Criteria," of this SER. A summary of the technical evaluation is described in Section 2.5, "Summary and Conclusions."

2.4.1 Geography and Demography

The staff evaluated the sufficiency of SHINE's site characteristic geography and demography description, as described in SHINE PSAR Section 2.1 using the guidance and acceptance criteria from Section 2.1, "Geography and Demography," of NUREG-1537, Parts 1 and 2, and Section 2.1, "Geography and Demography," of the ISG Augmenting NUREG-1537, Parts 1 and 2.

Consistent with the review procedures of the ISG Augmenting NUREG-1537, Part 2, Section 2.1, the staff compared and verified the SHINE site characteristics geography and demography with the bases for the site selection, as presented in SHINE PSAR Section 2.1.

NUREG-1537, Part 1, Section 2.1, states, in part, that the applicant should provide the descriptions of the site area and facility location to assess the acceptability of the SHINE site. The applicant should provide the following information: (1) specification of the location with respect to latitude and longitude, political subdivisions, and prominent natural and manmade features of the area; (2) site area map to determine the distance from the facility to the boundary lines of the exclusion area, including consideration of the location, distance, and orientation of plant structures with respect to highways, railroads, and waterways that traverse or lie adjacent to the exclusion area; and (3) a description of population distributions that address population in the site vicinity, including transient populations.

NUREG-1537, Part 1, Section 2.3.2, "Site Meteorology," states that sufficient information should be provided "for the dispersion analyses of airborne releases from the facility." Also, NUREG-1537, Part 2, Section 2.1, states that the staff should determine sufficient information is provided to conclude that "land use in the area of the facility is sufficiently stable or well enough planned that likely potential radiological risks to the public can be analyzed and evaluated with reasonable confidence." Therefore, the staff requested, in RAI 2.1-1 (Reference 14), that the applicant provide a tabulation of the distance from the center of the site and/or the expected

airborne release point to the site boundary in each of the 16 compass directions. This requested information would enable the staff to determine whether SHINE meets the applicable acceptance criteria of NUREG-1537, Part 2, Section 2.1.

In response to RAI 2.1-1 (Reference 20), SHINE provided the distances from a release point to the site boundary in each of the 16 compass directions. The staff finds the applicant's response supports the dispersion analyses of airborne releases from the facility, and therefore satisfies the acceptance criteria of NUREG-1537, Part 2, Section 2.1.

NUREG-1537, Part 2, Section 2.1, states that the PSAR should contain sufficient demographic information to allow accurate assessments of the potential radiological impact on the public resulting from the siting and operation of the proposed facility. In SHINE PSAR Section 2.1.2.1, "Resident Population," the applicant provided the distance and direction to the three nearest residences for use in its assessments of potential radiological impact on the public resulting from the siting and operation of the proposed facility. Therefore, in RAI 2.1-2 (Reference 14), the staff requested information regarding the distances to the nearest residences in the remaining 13 compass directions. In response to RAI 2.1-2 (Reference 20), the applicant provided the approximate distance between the SHINE site center and the nearest residence in each of the 13 remaining compass directions. Based on its review of the distances provided in the SHINE response to RAI 2.1-2 and the PSAR meteorological data, the staff confirmed that the nearest resident in the northwest direction is also the critical resident. The staff finds the applicant's response satisfies the acceptance criteria of Part 2, Section 2.1.

The staff reviewed the information provided in SHINE PSAR Section 2.1 and concluded that this section of the SHINE PSAR forms the basis for evaluations (e.g., dose calculations) performed in other chapters. The distance-direction relationships specified in the PSAR to area boundaries, roads, railways, waterways, prevailing winds, and other significant features of the area were independently verified using a third-party-supplied map.

On the basis of its review, the staff has determined that the level of detail provided on SHINE's geography and demography demonstrates an adequate design basis and satisfies the applicable acceptance criteria of NUREG-1537, Part 2, Section 2.1, allowing the staff to find that: (1) the information is sufficiently detailed to provide an accurate description of the geography surrounding the facility; (2) the demographic information is sufficient to allow accurate assessments of the potential radiological impact on the public resulting from the siting and operation of the proposed facility; and (3) there is reasonable assurance that no geographic or demographic features render the site unsuitable for operation of the proposed facility.

Therefore, the staff concludes that the SHINE facility's geography and demography, as described in SHINE PSAR Section 2.2 and supplemented by the applicant's responses to RAIs, is sufficient and meets the applicable regulatory requirements and guidance for the issuance of a construction permit in accordance with 10 CFR 50.35.

2.4.2 Nearby Industrial, Transportation, and Military Facilities

The staff evaluated the sufficiency of the SHINE site characteristics regarding nearby industrial, transportation, and military facility descriptions, as described in SHINE PSAR Section 2.2, using the guidance and acceptance criteria from Section 2.2, "Nearby Industrial, Transportation, and Military Facilities," of NUREG-1537, Parts 1 and 2, and Section 2.2, "Nearby Industrial, Transportation, and Military Facilities," of the ISG Augmenting NUREG-1537, Parts 1 and 2.

NUREG-1537, Part 2, does not specifically provide acceptance criteria for evaluating the aircraft accident probability posed by airports and airways. Two sources of potential acceptance criteria are: (1) NUREG-0800, "Standard Review Plan for the Review of Safety Analysis Reports for Nuclear Power Plants: LWR Edition," Section 3.5.1.6, "Aircraft Hazards," which states, in part, that accidents "…with a probability of occurrence greater than an order of magnitude of 10^{-7} per year should be considered in the design of the plant," and (2) International Atomic Energy Agency (IAEA)-TECDOC-1347, "Consideration of External Events in the Design of Nuclear Facilities other than Nuclear Power Plants, with Emphasis on Earthquakes" (Reference 41), Section 4.3, "Design Basis for Aircraft Crash," which has an acceptance criteria for aircraft accident probability of less than 10^{-5} per year.

Consistent with the review procedures in NUREG-1537, Part 2, Section 2.2, the staff confirmed that any hazards to the SHINE facility posed by normal operation and potential malfunctions and accidents at the nearby manmade stationary facilities and those related to transportation have been described and analyzed to the extent necessary to evaluate the potential radiological risks to the facility staff, the public, and the environment.

NUREG-1537, Part 1, Section 2.2, states, in part, that "the applicant should establish whether the effects of potential accidents in the vicinity of the facility from present and projected industrial, transportation, and military installations and operations should be used in the safety analyses and should establish the facility design parameters related to accidents selected. The applicant should consider all facilities and activities within 8 km of the facility. Facilities and activities at greater distances should be included as appropriate to their significance of accident impact on the facility."

In SHINE PSAR Section 2.2.1, "Locations and Routes," the applicant provides maps showing locations and distance of nearby industrial facilities, pipelines, waterways, highways, railroads, airports, and airways from the SHINE site. The staff confirmed that any hazards to the facility posed by normal operation and potential malfunctions and accidents at the nearby manmade stationary facilities and those related to transportation have been described and analyzed to the extent necessary to evaluate the potential radiological risks to the facility staff, the public, and the environment.

In SHINE PSAR Section 2.2.2, the applicant describes the air traffic, including airports, airways, and military airports and training, approach and holding patterns near the proposed SHINE site, and the evaluation and result of its analyses of the aircraft hazards associated with this air traffic. In PSAR Section 2.2.2, the applicant also calculated the aircraft crash probabilities due to operations at the SWRA. The staff finds acceptable the methodologies utilized by the applicant to calculate air craft accident probabilities and independently confirmed the applicant's calculations.

NUREG-1537, Part 2, Section 2.2, states, in part, that "[t]he reviewer should focus on facilities, activities, and materials that may reasonably be expected to be present during the projected lifetime…." The staff noted that from 2003 to 2012, the Southern Wisconsin AirFest was an activity held at the SWRA. Therefore, in RAI 2.2-2(a) (Reference 14), the staff requested additional information regarding the Southern Wisconsin AirFest.

In response to RAI 2.2-2(a) (Reference 20), SHINE provided an evaluation of the accident probability due to the increased number of takeoffs and landings should the Southern Wisconsin AirFest return to the SWRA. The staff finds that the SHINE provided evaluation shows that the

accident probability due to the addition of a future air show at the SWRA is bounded by the current analysis provided in PSAR Section 2.2.

RAI 2.2-4(a) (Reference 15) requested information regarding why a potential accident during an AirFest performance (or rehearsal) would not adversely affect the SHINE facility. In response, SHINE indicated that the site exists entirely within the lateral boundaries of the SWRA Class E airspace, and that 14 CFR 91.303, "Aerobatic flight," paragraph (c) prohibits aerobatic flight in Class E airspace. Furthermore, according to Department of Transportation Order 8900.1, "Flight Standards Information Management System," (Reference 38), in order to not detract from safety or create a hazard to any non-participants or spectators, the location of the SHINE facility would need to be taken into consideration by the Federal Aviation Administration (FAA) when authorizing any future aviation events at the SWRA. The staff finds that applicant's response provides a sufficient approach to reduce the potential of an accident impacting the facility during potential future AirFest events.

In RAI 2.2-2(b) (Reference 14), the staff requested that the applicant provide justification for utilizing IAEA-TECDOC-1347, as opposed to NUREG-0800, Section 3.5.1.6 acceptance criteria for aircraft accidents. In its response, the applicant states that IAEA-TECDOC-1347 applies specifically to nuclear installations that are not nuclear power plants, such as research reactors and facilities for fuel conversion, fabrication and reprocessing. Because the SHINE facility is not a power reactor, the facility is considered in the scope of IAEA-TECDOC-1347. In addition, the applicant states that the use of the acceptance criteria contained in IAEA-TECDOC-1347 is appropriate for the design of the SHINE facility. In RAI 2.2-4(b), the staff requested information to justify use of the IAEA's aircraft accident probability of 10^{-5} yr^{-1}, as opposed to utilizing an aircraft accident threshold probability of 10^{-6} yr^{-1} (Reference 39) as supported by NRC precedent and DOE standards on aircraft crashes (DOE-STD-3014-96, "Accident Analysis for Aircraft Crash into Hazardous Facilities," October 1996, Reaffirmed May 2006) (Reference 40).

In response to RAI 2.2-4(b), SHINE provided an updated evaluation of the aircraft hazard using an aircraft accident threshold probability of 10^{-6} per year. The updated evaluation used updated aircraft operation flight data from FAA, which indicated fewer operations than were used in the PSAR evaluation. The total crash probabilities calculated by the updated SHINE evaluation are provided in SER Table 2.2-1.

Table 2.2-1. Total Crash Probability

	Large Non-Military Aircraft	Small Non-Military Aircraft	Military Aircraft
Airport	2.9×10^{-7}	2.6×10^{-4}	1.5×10^{-7}
Airways	1.5×10^{-8}	1.9×10^{-6}	1.6×10^{-7}
Total	3.0×10^{-7}	2.6×10^{-4}	3.1×10^{-7}

As Table 2.2-1 indicates, the calculated crash probability (2.6×10^{-4} yr^{-1}) for small non-military aircraft exceeds the threshold probability of 10^{-6} yr^{-1}, while the combined probability of all other aircraft crashes (6.1×10^{-7} yr^{-1}) does not exceed the threshold probability. Thus, the safety-related structures of the SHINE facility must be designed to withstand the impact of a small non-military aircraft. The staff finds that the revised analysis meets NRC precedence and is therefore acceptable.

In SHINE PSAR Section 2.2.3, the applicant identifies and describes its analysis of potential accidents to be considered as design-basis events and the potential effects of those accidents

on the facility, in terms of design parameters (e.g., overpressure, missile energies) or physical phenomena (e.g., impact, flammable or toxic clouds). Design-basis events, internal and external to the SHINE facility, are defined as those accidents that have a probability of radiological release to the public on the order of magnitude of 10^{-7} per year, or greater, with the potential consequences serious enough to affect the safety of the facility. The following accident categories were considered in selecting design-basis events: explosions, flammable vapor clouds (delayed ignition), toxic chemicals, and fires. The staff reviewed and finds acceptable the methodologies utilized by the applicant to calculate the effects of potential accidents involving hazardous materials or activities on site and in the vicinity of the SHINE site. The staff also independently confirmed the applicant's calculations.

NUREG-1537, Part 2, Section 2.2, states, in part, that the PSAR should provide information "complete enough for evaluations of potential risks posed by these facilities to the safe operation and shutdown of the reactor during its projected lifetime."

SHINE PSAR Section 2.2.3.1.3, "Toxic Chemicals," states, "[t]he control room is not safety-related. The control room operators are not required to operate safety-related equipment to ensure the safety of the public. Therefore, a toxic gas release is not a hazard to the facility."

The staff in RAIs 2.2-1 and 2.2-3 (Reference 14), requested that SHINE provide a description of why an onsite or offsite toxic gas release during normal operations would not initiate an accident that could endanger the public and/or cause damage to the facility, should the control room operators become incapacitated.

In response to these RAIs, the applicant evaluated the potential for an offsite toxic gas release within 5 mi (8 km) of the site. Both stationary and mobile sources of hazardous chemicals were analyzed. Sources were identified, screened, or evaluated based on Regulatory Guide 1.78, "Evaluating the Habitability of a Nuclear Power Plant Control Room During a Postulated Hazardous Chemical Release," guidance (Reference 42) and criteria. The evaluation was performed using Version 5.4.4 of the ALOHA (Areal Locations of Hazardous Atmospheres) computer program from the National Oceanic and Atmospheric Administration (Reference 43). In NUREG-1851, "Safety Evaluation Report for the American Centrifuge Plant in Piketon, Ohio," (Reference 44), the staff determined that the "ALOHA code is well-known … and acceptable." Approximately 12 different potentially hazardous chemicals were evaluated. Of the chemicals evaluated, the applicant determined that only an ammonia release could have a greater than 10^{-6} per year potential to result in an uninhabitable control room; however, the applicant also determined that following such an ammonia release, the control room operators would have sufficient time (i.e., at least 2 minutes per acceptance criteria in Regulatory Guide 1.78) to take protective measures (e.g., shut down the facility). Since the regulatory guide is used for other 10 CFR Part 50, "Domestic Licensing of Production and Utilization Facilities," licensees (e.g., nuclear power plants), the staff finds that use of Regulatory Guide 1.78 is appropriate for evaluating the SHINE control room habitability.

The staff finds that the applicant's response to RAI 2.2-1 and RAI 2.2-3 satisfies the acceptance criteria of the NUREG-1537, Part 2, Section 2.2.

On the basis of its review, the staff has determined that: (1) the level of detail and analyses provided in SHINE PSAR Section 2.2 demonstrates an adequate design basis and satisfy the applicable acceptance criteria of NUREG-1537, Part 2, Section 2.2, and (2) the applicant discusses all nearby manmade facilities and activities that could pose a hazard to its operations. There is reasonable assurance that normal operations of such facilities would not affect SHINE

operations. In addition, the analyses in PSAR Chapter 13, “Accident Analysis,” of potential malfunctions or accidents at nearby manmade facilities and consideration of normal activities at those facilities show that safe shutdown would not be prevented, and no undue radiological risk to the public, the environment, or the operating staff is predicted. The potential consequences of these events at nearby facilities are considered or bounded by applicable accidents analyzed in Chapter 13 of SHINE PSAR.

Based on SHINE PSAR Section 2.2, as supplemented by the applicant’s responses to RAIs, the staff finds that the applicant’s description of operations and potential accidents at nearby manmade facilities and activities (i.e., industrial, transportation, and military sufficient and meets the applicable regulatory requirements and guidance for the issuance of a construction permit in accordance with 10 CFR 50.35.

2.4.3 Meteorology

The staff evaluated the sufficiency of the applicant’s description of site meteorology, as described in SHINE PSAR Section 2.3 using the guidance and acceptance criteria from Section 2.3, “Meteorology,” of NUREG-1537, Part 2.

Consistent with the review procedures of the ISG Augmenting NUREG-1537, Part 2, Section 2.3, the staff verified that sufficient documented and referenced historical information is provided for the necessary analyses of meteorological effects at the proposed site. The staff determined that data provided address both short-term conditions applicable to accidental releases of radioactive material and long-term averages applicable to releases during normal reactor operation. The staff also verified that the predicted frequencies of recurrence and intensities of severe weather conditions are documented.

NUREG-1537, Part 1, Section 2.3, states, in part, that “the applicant should describe the meteorology of the site and its surrounding areas. Sufficient data on average and extreme conditions should be included to permit an independent evaluation.”

SHINE PSAR Section 2.3.1, “General and Local Climate,” provides a general and local climate analysis, with respect to historical and annual frequencies of severe weather for the proposed site, including the following:

- Identification of region with climate representative of the project site.
- Regional data sources.
- Identification and selection for analysis of weather monitoring stations located within the site climate region.
- Extreme wind.
- Tornadoes and waterspouts.
- Water equivalent precipitation extremes.
- Hail, snowstorms and ice storms, thunderstorms and lightning.
- Snowpack and probable maximum precipitation.
- Design dry bulb and wet bulb temperatures.
- Extreme dry bulb temperatures.
- Restrictive dispersion conditions.
- Air quality.
- Climate change.

The staff notes that in response to RAI 3.2-1, the applicant explained that the snowpack load data presented in PSAR Sections 2.3.1.2.9, “Snowpack and Probable Maximum Precipitation (PMP),” and 3.2.3, “Snow, Ice, and Rain Loading,” are equivalent, since both utilize American Society of Civil Engineers Standard ASCE 7-05, “Minimum Design Loads for Buildings and Other Structures,” Figure 7-1. (Note, the SHINE response to RAI 3.2-1 pointed out that PSAR Sections 2.3.1.2.9 and 19.3.2.3.6 erroneously states the units for the snowpacks in inches, when the ASCE 7-05, Figure 7-1 snowpack units actually in pounds per square foot (lbs/ft^2). This error has been corrected in the SHINE PSAR. The staff’s evaluation of the response to RAI 3.2-1 is in Chapter 3, “Design of Structures, Systems, and Components,” of this SER.

In SHINE PSAR Section 2.3.2, “Site Meteorology,” the applicant provided its local climate analysis for the dispersion conditions in the vicinity of the proposed site. The applicant provided the meteorological information to be used in Chapters 11 and 13 for both long-term and short-term dispersion calculations. The applicant also provided several alternative sources of meteorological information and plans for access to meteorological information during the proposed license period.

On the basis of its review, the staff has determined that the level of detail and analyses provided in SHINE PSAR Section 2.3 demonstrates an adequate design basis and satisfies the acceptance criteria of NUREG-1537, Part 2, Section 2.3, allowing the staff to find that: (1) the meteorological history and projections for the proposed site have been prepared in an acceptable form, (2) these projections have been factored into the choice of facility location and design sufficiently to provide assurance that no weather-related event is likely to cause damage to the facility during its lifetime that could release uncontrolled radioactive material to the unrestricted area, (3) the meteorological information is sufficient for analyses applicable to and commensurate with the risks of the dispersion of airborne releases of radioactive material in the unrestricted environment at the proposed site, and (4) the methods and assumptions are applied to releases from both normal operations and postulated accidents at the facility.

Based on SHINE PSAR Section 2.3, as supplemented by the applicant’s responses to RAIs, the staff finds that the applicant’s description of general, local, and site meteorology sufficient and meets the applicable regulatory requirements and guidance for the issuance of a construction permit in accordance with 10 CFR 50.35.

2.4.4 Hydrology

The staff evaluated the sufficiency of SHINE’s site characteristic regarding hydrology, as described in SHINE PSAR Section 2.4 using the guidance and acceptance criteria from Section 2.4, “Hydrology,” of NUREG-1537, Part 2.

Consistent with the review procedures of the NUREG-1537, Part 2, Section 2.4, the staff verified that the proposed site was selected with due consideration of potential hydrologic events and consequences, including any that could be initiated by either local or distant seismic disturbances. In addition, the staff confirmed that the design bases were incorporated into the facility design to address predicted hydrologic events, accidental release or leakage of primary coolant, and radioactive contamination of ground or surface waters.

NUREG-1537, Part 1, Section 2.4 states, in part, that:

> …the applicant should give sufficient information to allow an independent hydrologic engineering review to be made of all hydrologically related design bases, performance requirements, and bases for operation of structures, systems, and components important to safety. Sufficient information should also be provided about the water table, groundwater, and surface water features at the proposed site for analyses and evaluations in Chapters 11 and 13 of consequences of uncontrolled release of radioactive material from pool leakage or failure, neutron activation of soils in the vicinity of the proposed [site], or deposition and migration of airborne radioactive material released to the unrestricted area.

In SHINE PSAR Section 2.4, the applicant provides a detailed description of hydrological characteristics for its proposed site, including floods, probable maximum flood on streams and rivers, potential dam failures, probable maximum surge and seiche flooding, probable maximum tsunami hazards, ice effects, cooling water canals and reservoirs, channel diversions, groundwater contamination considerations, and accidental releases of radioactive liquid effluents in ground and surface water.

SHINE PSAR, Section 2.4.11.2, "Pathways," provides a particle flow analysis that only considers advective groundwater flow and predicts groundwater travel times and flow directions. Although the text does mention dispersivity (Section 2.4.11.3), the plume-spreading effects were not considered in the transport analysis. The staff concluded that without an understanding of the potential width of the contaminant plume, the analysis does not provide sufficient information to design a groundwater monitoring network (PSAR Chapter 11) or to evaluate the potential consequences of uncontrolled releases (PSAR Chapter 13). For instance, the potentiometric surfaces presented in SHINE PSAR Figure 2.4-4, "Simplified Groundwater Table Contours Based on Measured Groundwater Elevations in Monitoring Wells," (Reference 45), suggests that any releases at the facility would flow undetected between Monitoring Wells SG-GW4A and SM-GW2A. Furthermore, the depth to bedrock may be as deep as 300 feet. Therefore, ample information must be presented regarding probable transport depths in order to allow the wells to be screened at the interval(s) most likely to detect potential releases.

In RAI 2.4-1 (Reference 14), the staff requested that the applicant provide additional information and analysis on the spreading effects and transport depth of the contaminant plume for the design of the groundwater monitoring network presented in PSAR Chapter 11, and ensure that the dose limits for individual members of the public, as required by 10 CFR 20.1302(b), have been met.

In response to RAI 2.4-1 (Reference 20), the applicant provided information on the test wells and referred to the preliminary analysis of advective travel times in groundwater, as described in PSAR Section 2.4.11.2 and PSAR Table 2.4-13, "Summary of Parameters Used for Advective Travel Time Estimations." The applicant indicated that there are no plausible liquid release pathways from the facility based on their analysis and, therefore, no liquid monitoring is required to meet the requirements of 10 CFR 20.1302. The applicant further stated that while no liquid monitoring is required, it will voluntary conduct groundwater monitoring as part of the Community Environmental Monitoring Program to provide the public greater confidence in the operation of the plant. Additionally, the applicant stated that the requirements of 10 CFR 20.1302 will be met as described in PSAR Section 11.1.7, "Environmental Monitoring." The staff finds that the applicant's response to RAI 2.4-1 provides the requested information and, therefore, is acceptable.

SHINE PSAR Table 2.4-13 (Section 2.4.11.2) presents the results of the analysis of groundwater travel times from the site to three offsite locations: (1) Rock River (West), (2) Rock River Tributary (Southwest), and (3) the nearest water supply well (MF461). The effective porosity for the expected case is 30 percent. The staff noted that the reference cited in the table for the porosity (Gaffield et al., 2002) indicates that a porosity of 20 percent is most representative of Rock County conditions. For example, a porosity of 20 percent would result in a travel time from the site to Rock River (West) of 6 years as opposed to 9 years presented in the table.

In RAI 2.4-2 (Reference 14), the staff requested clarification regarding the porosity values used in the calculations. In response to RAI 2.4-2 (Reference 21), the applicant stated that the PSAR provides a range of porosity values from 10 percent to 30 percent. The 10 percent porosity value would provide the shortest groundwater travel time, while the 30 percent porosity value would provide the longest groundwater travel time. The applicant used the 10 percent porosity value to calculate the conservative advective travel times provided in PSAR Table 2.4-13. The applicant also stated that, as described in PSAR Section 2.5.2.3, "Site Soil Conditions," 20 percent effective porosity is not consistent with SHINE site conditions. Thus, the applicant used 30 percent effective porosity for the expected advective travel time. The staff finds the response to RAI 2.4-2 sufficiently clarified the information in PSAR Table 2.4-13 and, therefore, is acceptable.

SHINE PSAR Table 2.4-13 (Section 2.4.11.2) presents the results of the travel time analysis. The staff noted that an arithmetic average of the hydraulic conductivities was used in the expected case calculations. Typically, hydraulic conductivities are represented in a log-normal distribution and geometric means are used to represent typical values.

In RAI 2.4-3 (Reference 14), the staff asked for clarification regarding how hydraulic conductivity values were used and requested that the applicant provide the Advanced Aquifer Test Analysis Software (AQTESOLV) graphical output for the hydraulic conductivity calculations from the slug tests.

In response to RAI 2.4-3, the applicant indicated that since the calculated arithmetic mean of the hydraulic conductivity values was found to be more conservative than the calculated geometric mean of the hydraulic conductivity values, "SHINE used the arithmetic mean of the hydraulic conductivity values to calculate the expected advective travel times provided in Table 2.4-13." The applicant also clarified that the AQTESOLV graphical outputs for the hydraulic conductivity calculations from on-site slug tests were previously provided to the NRC as Appendix F of the Preliminary Hydrological Analyses for the Janesville, Wisconsin site, provided as Attachment 23 to the SHINE Response to Environmental Requests for Additional Information (Reference 31). The staff finds that the applicant's response to RAI 2.4-3 sufficiently clarified the information in PSAR Table 2.4-13 and, therefore, is acceptable.

SHINE PSAR Section 2.4.11.2 indicates that travel times through the unsaturated zone had not been considered due to the limited information available. The staff noted that an estimation of potential lag times through the unsaturated zone, following a release, is important with respect to evaluating accident scenarios and designing monitoring frequencies and remedial options.

In RAI 2.4-4 (Reference 14), the staff requested that the applicant provide additional information on the bounding estimates for travel time through the unsaturated zone.

In response to RAI 2.4-4 (Reference 21), the applicant stated that it determined bounding estimates for travel time through the unsaturated zone, or vadose zone, based on the estimated travel distance (thickness) of the vadose zone and the estimated velocity of groundwater travel through the vadose zone. For vertical flow, the travel distance is calculated as the thickness of the vadose zone (provided in RAI 2.4-4, Table 2.4-4-1). The applicant used a representative vadose zone thickness of 50 feet (15 m). A lower bound vadose zone thickness was estimated as 44 ft (13 m), while an upper bound vadose zone thickness was estimated as 71 feet (21 m). Bounding estimates for travel time through the vadose zone are provided in the response to RAI 2.4-4, Table 2.4-4-2. The staff finds that the applicant's response to RAI 2.4-4 provides the requested information and, therefore, is acceptable.

NUREG-1537, Part 1, Chapter 2 states, in part, "the applicant should discuss and describe the …hydrological… characteristics of the site and vicinity in conjunction with present and projected population distributions, industrial facilities and land use, and site activities and controls." SHINE PSAR Section 2.4.1.2, "General Setting – Groundwater," mentions that there are irrigation wells operated on properties in the vicinity that have the potential to influence groundwater levels. The staff noted that these irrigation wells could also act as pathways for bringing any groundwater contamination released by the facility to the surface. The pumping of irrigation wells can also have a significant effect on groundwater flow directions.

In RAI 2.4-5 (Reference 14), the staff requested that SHINE provide additional information on irrigation well location(s) and its construction and operating parameters.

In response to RAI 2.4-5 (Reference 21), the applicant provides a list of well construction reports and groundwater flow direction for both pumped and non-pumped conditions. Consequently, it is not anticipated that withdrawals from wells within an 8-km (5-mi) radius would change the flow direction of groundwater on the proposed SHINE site. The applicant determined the well with the lowest pumping head was closest to the proposed site. The applicant calculated the advective travel times for this well to be 0.1 years (expected permeability and porosity assumptions) and 0.01 years (conservative permeability and porosity assumptions). The staff finds that the applicant's response to RAI 2.4-5 provides the requested information and, therefore, is acceptable.

On the basis of its review, the staff has determined that the level of detail and analyses provided in SHINE PSAR Section 2.4 demonstrates an adequate design basis and satisfies the applicable acceptance criteria of NUREG-1537, Part 2, Section 2.4, which allows the staff to find the following:

(1) The applicant considered hydrologic events of credible frequency and consequence in selecting the facility site. The site is not located where catastrophic hydrologic events are credible.

(2) The applicant considered credible hydrologic events in developing the design bases for the facility, to mitigate or avoid significant damage so that safe operation and shutdown of the facility would not be precluded by a hydrologic event.

(3) The applicant selected combinations of site characteristics and facility design bases to provide reasonable assurance that uncontrolled release of radioactive material in the event of a credible hydrologic occurrence would be bounded by accidents analyzed in PSAR Chapter 13.

(4) The facility design bases give reasonable assurance that contamination of ground and surface waters at the site from inadvertent release or leakage of primary coolant, neutron activation, or airborne releases would not exceed applicable limits of 10 CFR Part 20, "Standards for Protection Against Radiation."

Based on SHINE PSAR Section 2.4, as supplemented by the applicant's responses to RAIs, the staff finds that the applicant's description of general, local, and site hydrology sufficient and meets the applicable regulatory requirements and guidance for the issuance of a construction permit in accordance with 10 CFR 50.35.

2.4.5 Geology, Seismology, and Geotechnical Engineering

The staff evaluated the sufficiency of SHINE's geology, seismology, and geotechnical characteristics for its proposed site, as described in SHINE PSAR Section 2.5 using the guidance and acceptance criteria from Section 2.5, "Geology, Seismology, and Geotechnical Engineering," of NUREG-1537, Part 2.

Consistent with the review procedures of the NUREG-1537, Part 2, Section 2.5, the staff confirmed that the information presented in the SHINE PSAR was obtained from sources of adequate credibility and is consistent with other available data, such as data from the U.S. Geological Survey (USGS) or in the FSAR of a nearby nuclear power plant. The staff also evaluated whether there is reasonable assurance that the seismic characteristics of the site are considered in the design bases of structures, systems, and other facility features discussed in PSAR Chapter 3, "Design of Structures, Systems, and Components."

NUREG-1537, Part 1, Section 2.5 states, in part, that "the applicant should detail the seismic and geologic characteristics of the [proposed] site and the region surrounding the site. The degree of detail and extent of the considerations should be commensurate with the potential consequences of seismological disturbance, both to the facility and to the public from radioactive releases."

In SHINE PSAR Section 2.5, the applicant provided descriptions on the regional geologic features, the site-specific geologic features, the historical seismic information, the maximum earthquake potential, how vibratory ground motion was addressed, the surface faults in the region, and the liquefaction potential.

The regulations in 10 CFR Part 100, Appendix A, "Seismic and Geologic Siting Criteria for Nuclear Power Plants," defines a capable fault as a fault with "[m]ovement at or near the ground surface at least once within the past 35,000 years or movement of a recurring nature within the past 500,000 years." Using this definition of capable fault, SHINE PSAR Section 2.5.1.4, "Structural Geology," provides a discussion of 17 major faults and folds in Wisconsin and the six surrounding states, and based on lack of evidence for Pleistocene or post-Pleistocene displacement, concludes that all but one are not capable.

In RAI 2.5-1 (Reference 14), the staff requested that the applicant provide additional information explaining the basis for the determination that there are no capable faults, and provide additional information with respect to the recurring nature of the faults.

In response to RAI 2.5-1 (Reference 21), the applicant clarified its determination that, with the exception of the Wabash Valley liquefaction features, the faults within 322 km (200 mi) show no

evidence of being capable faults and provided published scientific information to justify this claim.

The applicant stated in PSAR Section 2.5.1, that the only capable fault in the Wabash Valley liquefaction features region is located approximately 273 km (170 mi) south of the site. At least seven Holocene earthquakes and one late Pleistocene earthquake may have generated on the order of M 7.5 earthquakes. The applicant's RAI 2.5-1 response stated that the Wabash Valley liquefaction features "appear to have originated from earthquakes centered in southern Indiana and Illinois, more than 200 miles from the SHINE site." The staff finds that the applicant's response to RAI 2.5-1 provides the information requested and, therefore, is acceptable.

SHINE PSAR, Section 2.5.1.4.6, "Saint Charles Lineament (SCL)," states, in part, "[s]ince 1974, seven earthquakes of magnitude 2.5 or less have been recorded in regions surrounding the SCL." The staff noted that information pertaining to these earthquakes is not provided in the summary tables.

In RAI 2.5-2, (Reference 14), the staff requested that the applicant provide additional information regarding seven earthquakes that occurred near the Saint Charles Lineament SCL. In response to RAI 2.5-2 (Reference 21), the applicant stated that none of these seven earthquakes are listed in the composite earthquake catalog developed for the Central and Eastern United States Seismic Source Characterization for Nuclear Facilities (CEUS-SSC) Project (Reference 105). Since the seven earthquakes are not in the CEUS-SSC catalog, the applicant considered them not of a large enough magnitude or well enough located to indicate neotectonic activity along the SCL. Additionally, the applicant determined, based on a re-evaluation, that the seven referenced earthquakes do not suggest ongoing activity on the SCL, and should not be listed in PSAR Table 2.5-1, "Historic Earthquake Epicenters Located Within Approximately 200 Miles (322 km) of the SHINE Site." Additionally, because there is no evidence that any of these earthquakes were felt, SHINE did not include them in PSAR Table 2.5-3, "Recorded Earthquake Intensities (Modified Mercalli Intensity – MMI) for Earthquakes Within Approximately 200 Miles (322 km) of the SHINE Site." The staff finds that the applicant's response to RAI 2.5-2 provided the requested additional information and, therefore, is acceptable.

SHINE PSAR Section 2.5.2.2, "Structural Geology," states, in part, "[d]espite the presence of the Arch, cross sections from Mudrey et al. (1982), suggest that the Cambrian and Ordovician sedimentary rock units beneath the SHINE site probably have very shallow to horizontal dips. These observations indicate little or no net deformation beneath the SHINE site over about the last 500 million years." The staff's review of the Bedrock Geology of Wisconsin map referenced in the PSAR (Mudrey et al., 1982), failed to locate the cross-sections being referenced in the text.

In RAI 2.5-3 (Reference 14), the staff requested additional information on the cross sections associated with Bedrock Geology of Wisconsin in the document referenced in SHINE PSAR Section 2.5.2.2.

In its response (Reference 20), the applicant provided the web link referenced in the document (see Reference 46). The staff finds that the applicant's response to RAI 2.5-3 provided a sufficient reference to the requested document and, therefore, is acceptable.

SHINE PSAR Section 2.5.3.1, "Historic Earthquakes," provides a list of databases and references that were used to identify historic earthquakes at the location of the SHINE facility.

The staff noted that the most recent historic earthquake located within approximately 200 miles of the SHINE site was in 1985 (PSAR Table 2.5-1, page 2.5-26). Another database that includes six more recent earthquakes is compiled by the USGS at http://earthquake.usgs.gov/earthquakes.

In RAI 2.5-4 (Reference 14), the staff requested that the applicant provide additional information justifying the exclusion of the earthquake information compiled by the USGS from analysis in the PSAR, or provide a reanalysis that takes this information into consideration in the PSAR.

In response to RAI 2.5-4 (Reference 21), the applicant stated that it relied on the analysis of earthquake records used to create the comprehensive earthquake catalog for the CEUS-SSC project. Therefore, while the USGS-hosted database includes six post-1985 earthquake epicenters, SHINE included only those earthquakes that have passed the robust screening process used to prepare the CEUS-SSC catalog in PSAR Table 2.5-1. The staff finds that the applicant's response to RAI 2.5-4 described the bases for the exclusion of the USGS earthquake information and, therefore, is acceptable.

NUREG-1537, Part 1, Section 2.5.1, "Regional Geology," states, in part, "[t]he applicant should discuss all geologic and seismic hazards within the region that could affect the facility…." SHINE PSAR Section 2.5.2.4, "Non-Seismic Geological Hazards," states, in part, that "Rock County contains carbonate bedrock susceptible to dissolution or karst formation [Reference 46]." The staff noted that the Rock County Hazard Mitigation Plan indicates that no significant sinkholes have been reported in Rock County in recent years. The plan indicates a potential for karst features to form in the county, particularly in the eastern third of the county that lies to the east of the SHINE site.

In RAI 2.5-5 (Reference 14), the NRC staff requested that the applicant provide additional information regarding regional magnetic and gravity geophysical anomalies to include an evaluation of potential karst features at the SHINE site.

In response to RAI 2.5-5 (Reference 21), the applicant provided two figures which provide details of the composite aeromagnetic and Bouguer gravity anomalies in southern Wisconsin. The applicant stated that from these figures, the available regional magnetic and Bouguer gravity anomalies in southern Wisconsin are suitable only for identifying the major regional fault structures with large vertical separations. Regarding sink holes, the applicant stated that small sinkholes in parts of Rock County have been reported but not at the proposed site. Because of the near-surface geology, the applicant stated that it is very unlikely that a sinkhole would form near the SHINE site. The SHINE site has little topographic relief and lacks any geomorphic evidence of differential subsidence that may indicate past or ongoing solution of any subsurface carbonate rocks and formation of karst features. The staff finds the applicant's response to RAI 2.5-5 provided the requested information and, therefore, is acceptable.

NUREG-1537, Part 1, Section 2.5.7, "Liquefaction Potential," states that the applicant should discuss soil structure. SHINE PSAR Section 2.5.7.1, "Site Soil Conditions," states that geotechnical engineering field investigations were conducted that included standard penetrometer test (SPT) blow counts (N-values) measured in 14 boreholes. The staff noted that, however, details and an explanation were not given about how and whether these investigations were used to develop the soil parameters (engineering properties) listed in SHINE PSAR Chapter 3 (Section 3.4.2.6.3.1).

In RAI 2.5-6 (Reference 14), the staff requested that the applicant provide a report with details and results from the geotechnical investigations.

In response to RAI 2.5-6 (Reference 21), the applicant stated that the Preliminary Geotechnical Engineering Report for the SHINE site was previously provided to the NRC as Attachment 26 to the SHINE Response to Environmental RAI. The applicant also stated that soil parameters in FSAR Section 3.4.2.6.3.1 will be revised to more accurately reflect the results documented in the Preliminary Geotechnical Engineering Report. The staff finds the applicant's response to RAI 2.5-6 with a commitment to update the FSAR to accurately and consistently reflect the Preliminary Geotechnical Engineering Report acceptable.

On the basis of its review, the staff has determined that the level of detail and analyses provided in SHINE PSAR Section 2.5 demonstrates an adequate design basis and satisfies the applicable acceptance criteria of NUREG-1537, Part 2, Section 2.5, allowing the staff to find the following:

(1) The information on the geologic features and the potential seismic activity at the site has been provided in sufficient detail and in a form to be integrated acceptably into the design bases for structures, systems, and operating characteristics of the facility.

(2) The information in the PSAR indicates that damaging seismic activity at the proposed site during its projected lifetime is very unlikely. Furthermore, if seismic activity were to occur, any radiologic consequences are bounded or analyzed in PSAR Chapter 13.

(3) The PSAR shows that there is no significant likelihood that the public would be subject to undue radiological risk following seismic activity, therefore, the potential for earthquakes does not make the site unsuitable for the proposed facility.

Based on SHINE PSAR Section 2.5, as supplemented by the applicant's responses to RAIs, the staff finds that the applicant's description of geology, seismology, and geotechnical characteristics sufficient and meets the applicable regulatory requirements and guidance for the issuance of a construction permit in accordance with 10 CFR 50.35.

2.5 Summary and Conclusions

The staff evaluated the descriptions and discussions of the SHINE facility site characteristics, as described in Chapter 2 of the SHINE PSAR and supplemented by the applicant's responses to RAIs, and finds that the SHINE facility site characteristics: (1) provide reasonable assurance that the final design will conform to the design basis, and (2) meet all applicable regulatory requirements and acceptance criteria in NUREG-1537. Based on these findings, the staff has made the following conclusions for the issuance of a construction permit in accordance with 10 CFR 50.35:

(1) SHINE has described the proposed design of the facility, including, but not limited to, the principal architectural and engineering criteria for the design, and has identified the major features or components incorporated therein for the protection of the health and safety of the public.

(2) Such further technical or design information as may be required to complete the safety analysis, and which can reasonably be left for later consideration, will be supplied in the FSAR.

(3) There is reasonable assurance that, taking into consideration the site criteria contained in 10 CFR Part 100, the proposed facility can be constructed and operated at the proposed location without undue risk to the health and safety of the public.

3.0 DESIGN OF STRUCTURES, SYSTEMS, AND COMPONENTS

The purpose of structures, systems, and components (SSCs) is to ensure safety of the SHINE Medical Technologies, Inc. (SHINE or the applicant) irradiation facility (IF) and radioisotope production facility (RPF) and protection of the public. The material presented in this chapter of the SHINE Preliminary Safety Analysis Report (PSAR) should emphasize the safety and protective functions and related design features that help provide defense in depth against uncontrolled release of radioactive material. The bases for the design criteria for some of the systems discussed in this chapter may be developed in other chapters of the PSAR.

This chapter of the SHINE construction permit safety evaluation report (SER) describes the review and evaluation of the U.S. Nuclear Regulatory Commission (NRC) staff (the staff) of the preliminary design of the SHINE IF and RPF SSCs as presented in Chapter 3, "Design of Structures, Systems, and Components," of the SHINE PSAR, as supplemented by the applicant's responses to requests for additional information (RAIs).

3.1 Areas of Review

SHINE PSAR Chapter 3 identifies the SSCs considered to ensure facility safety and protection of the public. SHINE PSAR Sections 3.1, "Design Criteria," through 3.5, "Systems and Components," are applicable to both the SHINE IF and RPF. The SSCs that are unique to either the IF or RPF are covered in SHINE PSAR Sections 3.5a, "Irradiation Facility," or 3.5b, "Radioisotope Production Facility," respectively.

The staff reviewed SHINE PSAR Chapter 3 against applicable regulatory requirements using appropriate regulatory guidance and standards to assess the sufficiency of the preliminary design criteria of the SHINE facility SSCs. As part of this review, the staff evaluated descriptions and discussions of the SHINE facility SSCs, with special attention to design and operating characteristics, unusual or novel design features, and principal safety considerations. The preliminary design of the SHINE facility SSCs was evaluated to ensure the design criteria; design bases; and information relative to materials of construction, general arrangement, and approximate dimensions are sufficient to provide reasonable assurance that the final design will conform to the design basis. In addition, the staff reviewed SHINE's identification and justification for the selection of those variables, conditions, or other items which are determined to be probable subjects of technical specifications for the facility, with special attention given to those items that may significantly influence the final design.

Areas of review for this chapter included both SHINE IF and RPF SSCs. Within these review areas, the staff assessed the capability of the SSCs to ensure safe facility operation, safe facility shutdown and continued safe conditions, response to anticipated transients, response to potential accidents analyzed in PSAR Chapter 13, "Accident Analysis," and control of radioactive material discussed in PSAR Chapter 11, "Radiation Protection Program and Waste Management."

3.2 Summary of Application

SHINE PSAR Chapter 3 describes the design bases of SSCs for the IF and RPF established to ensure facility safety and protection of the public. With the exception of discussion related to IF- or RPF-specific systems, the summary provided below applies to both the IF and RPF.

SHINE PSAR Section 3.1 discusses the use of defense-in-depth practices in the SHINE facility and system design. PSAR Section 3.1 also discusses the facility and provides a "road map" where the specifics of the design criteria are discussed in detail. PSAR Section 3.2, "Meteorological Damage," includes historical data and predictions as specified in PSAR Chapter 2, "Site Characteristics," and discusses the criteria used to design the SHINE facility to withstand wind, tornado, snow and ice, and water damage. The combinations of the meteorological loads with other loads (i.e., dead loads and earthquake loads) for the structural analysis are provided in PSAR Section 3.4, "Seismic Damage." PSAR Section 3.3, "Water Damage," provides information on the hydrological conditions found at the facility. PSAR Sections 3.4.1, "Seismic Input," and 3.4.2, "Seismic Analysis of Facility Structures," provide information on seismic input and analysis, including the following items: design response spectra, design time histories, critical damping values, seismic analysis methods, soil-structure interaction analysis (includes meteorological loads), combination of earthquake components, seismic analysis results, assessment of structural seismic stability (includes meteorological loads), and structural analysis of facility (includes meteorological loads). PSAR Section 3.4.3, "Seismic Qualification of Subsystems and Equipment," presents the seismic qualification of the SHINE facility's systems and equipment. PSAR Section 3.4.4, "Seismic Instrumentation," discusses SHINE's seismic instrumentation. PSAR Section 3.4.5.1, "Aircraft Impact Analysis," provides an aircraft impact analysis since the SHINE facility is located near the Southern Wisconsin Regional Airport (SWRA). PSAR Section 3.4.5.2, "External Explosions," provides an assessment of external explosions. PSAR Section 3.5, "Systems and Components," discusses SSCs and the criteria used to determine if SSCs are considered safety-related or non-safety-related. Additionally, SSCs were classified by three seismic categories (i.e., Seismic Category I, Seismic Category II, and Seismic Category III) and two quality levels (i.e., QL-1 and QL-2). Safety- related SSCs are classified QL-1 and Seismic Category I; and non-safety-related SSCs are classified QL-2 and either Seismic Category II or Seismic Category III. PSAR Sections 3.5a, "Irradiation Facility," and 3.5b, "Radioisotope Production Facility," lists systems that are part of the IF and RPF, respectively. Specifically, SSCs required to operate during and/or after design-basis accidents or a design-basis earthquake are discussed in these sections or in the system's PSAR section and include relevant requirements, standards, and documentation.

Additionally, the following SHINE PSAR tables list facility systems and provide references to guidance, codes, and standards.

- Table 3.1-1, "Systems List."
- Table 3.1-2, "Codes and Standards Used to Guide the Design of the SHINE Facility."
- Table 3.1-3, "NRC Guidance Used in the Design of the SHINE Facility."

3.3 Regulatory Basis and Acceptance Criteria

The staff reviewed SHINE PSAR Chapter 3 against applicable regulatory requirements, using appropriate regulatory guidance and standards, to assess the sufficiency of the preliminary design criteria for the SHINE facility SSCs for the issuance of a construction permit. In

accordance with paragraph (a) of 10 CFR 50.35, “Issuance of Construction Permits,” a construction permit authorizing SHINE to proceed with construction may be issued once the following findings have been made:

(1) SHINE has described the proposed design of the facility, including, but not limited to, the principal architectural and engineering criteria for the design, and has identified the major features or components incorporated therein for the protection of the health and safety of the public.

(2) Such further technical or design information as may be required to complete the safety analysis, and which can reasonably be left for later consideration, will be supplied in the final safety analysis report (FSAR).

(3) Safety features or components, if any, which require research and development have been described by SHINE and a research and development program will be conducted that is reasonably designed to resolve any safety questions associated with such features or components.

(4) On the basis of the foregoing, there is reasonable assurance that: (i) such safety questions will be satisfactorily resolved at or before the latest date stated in the application for completion of construction of the proposed facility, and (ii) taking into consideration the site criteria contained in 10 CFR Part 100, “Reactor Site Criteria,” the proposed facility can be constructed and operated at the proposed location without undue risk to the health and safety of the public.

With respect to the last of these findings, the staff notes that the requirements of 10 CFR Part 100 are specific to nuclear power reactors, and therefore not applicable to the SHINE facility. However, the staff evaluated SHINE’s site specific conditions using site criteria similar to 10 CFR Part 100, by using the guidance in NUREG-1537, Part 1, “Guidelines for Preparing and Reviewing Applications for the Licensing of Non-Power Reactors, Format and Content,” issued February 1996 (Reference 4) and NUREG-1537, Part 2, “Guidelines for Preparing and Reviewing Applications for the Licensing of Non-Power Reactors, Standard Review Plan and Acceptance Criteria,” issued February 1996 (Reference 5). The staff’s review evaluated the geography and demography of the site; nearby industrial, transportation, and military facilities; site meteorology; site hydrology; and site geology, seismology, and geotechnical engineering to ensure that issuance of the construction permit will not be inimical to public health and safety. The staff also evaluated structures, components, equipment, and systems designed to ensure safe operation, performance, and shutdown when subjected to extreme weather, floods, seismic events, missiles (including aircraft impacts), chemical and radiological releases, and loss of offsite power.

The staff’s evaluation of the preliminary design criteria for SHINE’s SSCs does not constitute approval of the safety of any design feature or specification. Such approval will be made following the evaluation of the final design of the SHINE facility SSCs as described in the FSAR as part of SHINE’s operating license application.

3.3.1 Applicable Regulatory Requirements

The applicable regulatory requirements for the evaluation of SHINE's SSC design criteria are as follows:

> 10 CFR 50.34, "Contents of applications; technical information," paragraph (a), "Preliminary safety analysis report."
>
> 10 CFR 50.40, "Common standards."

3.3.2 Regulatory Guidance and Acceptance Criteria

In applying guidance and acceptance criteria, the staff used its judgment as to which acceptance criteria were relevant to SHINE's proposed facility, as much of this guidance was originally developed for nuclear reactors. Given the similarities in SHINE's proposed facility and non-power research reactors, the staff used established guidance documents and the Commission's regulations to determine the acceptance criteria for demonstrating compliance with 10 CFR regulatory requirements. For example, the staff used:

- NUREG-1537, Part 1, "Guidelines for Preparing and Reviewing Applications for the Licensing of Non-Power Reactors, Format and Content," issued February 1996 (Reference 4).
- NUREG-1537, Part 2, "Guidelines for Preparing and Reviewing Applications for the Licensing of Non-Power Reactors, Standard Review Plan and Acceptance Criteria," issued February 1996 (Reference 5).
- "Final Interim Staff Guidance [ISG] Augmenting NUREG-1537, Part 1, 'Guidelines for Preparing and Reviewing Applications for the Licensing of Non-Power Reactors: Format and Content,' for Licensing Radioisotope Production Facilities and Aqueous Homogeneous Reactors," dated October 17, 2012 (Reference 6).
- "Final Interim Staff Guidance Augmenting NUREG-1537, Part 2, 'Guidelines for Preparing and Reviewing Applications for the Licensing of Non-Power Reactors: Standard Review Plan and Acceptance Criteria,' for Licensing Radioisotope Production Facilities and Aqueous Homogeneous Reactors," dated October 17, 2012 (Reference 7).

As stated in the ISG Augmenting NUREG-1537, the staff determined that certain guidance originally developed for heterogeneous non-power research and test reactors is applicable to aqueous homogenous facilities and production facilities. SHINE used this guidance to inform the design of its facility and prepare its PSAR. The staff's use of reactor-based guidance in its evaluation of the SHINE PSAR is consistent with the ISG Augmenting NUREG-1537.

As appropriate, additional guidance (e.g., NRC regulatory guides, Institute of Electrical and Electronics Engineers (IEEE) standards, American National Standards Institute/American Nuclear Society (ANSI/ANS) standards) has been used in the staff's review of SHINE's PSAR. The use of additional guidance is based on the technical judgment of the reviewer, as well as references in NUREG-1537, Parts 1 and 2; the ISG Augmenting NUREG-1537, Parts 1 and 2; and the SHINE PSAR. Additional guidance documents used to evaluate SHINE's PSAR are provided as references in Appendix B, "References," of this SER.

3.4 Review Procedures, Technical Evaluation, and Evaluation Findings

SHINE PSAR Chapter 3 describes the design bases of SSCs for the IF and RPF established to ensure facility safety and protection of the public. The technical evaluations provided in Sections 3.4.1 through 3.4.4 apply to both the SHINE IF and RPF; Section 3.4.5.1 applies to the SHINE IF; and Section 3.4.5.2 applies to the SHINE RPF. The staff's evaluations consider the interface of SSCs between the IF and RPF as part of the technical evaluation.

The staff performed an evaluation of the technical information presented in SHINE PSAR Chapter 3, as supplemented by the applicant's responses to RAIs. The purpose of the review was to assess the sufficiency of the preliminary design and performance of the SHINE facility's SSC design criteria for the issuance of a construction permit, in accordance with 10 CFR 50.35(a). Sufficiency of the preliminary design criteria for SHINE's SSCs is determined by ensuring the design meets applicable regulatory requirements, guidance, and acceptance criteria, as discussed in Section 3.3, "Regulatory Basis and Acceptance Criteria," of this SER. A summary of the technical evaluation is SER Section 3.5, "Summary and Conclusion."

For the purposes of issuing a construction permit, the preliminary design of the SHINE facility SSCs may be adequately described at a functional or conceptual level. The staff evaluated the sufficiency of the preliminary design of the SHINE facility SSCs based on the applicant's design methodology and ability to provide reasonable assurance that the final design will conform to the design bases with adequate margin for safety. As such, the staff's evaluation of the preliminary design of the SHINE facility SSCs does not constitute approval of the safety of any design feature or specification. Such approval will be made following the evaluation of the final design of the SHINE facility SSCs, as described in the FSAR, as part of SHINE's operating license application.

3.4.1 Design Criteria

The staff evaluated the sufficiency of the design criteria, as described in SHINE PSAR Section 3.1 using the guidance and acceptance criteria from Section 3.1, "Design Criteria," of NUREG-1537, Parts 1 and 2.

Consistent with the review procedures of NUREG-1537, Part 2, Section 3.1, the staff compared the specified design criteria with the proposed normal operation of the SHINE facility, response to anticipated transients, and consequences of accident conditions applicable to the appropriate SSCs assumed to function in SHINE PSAR Section 3.1 and other relevant chapters of the PSAR.

Section 3.1 of NUREG-1537, Part 2, states that the design criteria should be specified for each SSC that is assumed in the PSAR to perform an operational or safety function. Additionally, design criteria should include references to applicable up-to-date standards, guides, and codes. The design criteria for SSCs should be stipulated as outlined below:

- Design for the complete range of normal facility operating conditions.
- Design to cope with anticipated transients and potential accidents.

- Design with redundancy to protect against unsafe conditions in case of single failures of facility protective and safety systems.
- Design to facilitate inspection, testing, and maintenance.
- Design to limit the likelihood and consequences of fires, explosions, and other potential manmade conditions.
- Design with quality standards commensurate with the safety function and potential risks.
- Design bases to withstand or mitigate wind, water, and seismic damage to reactor systems and structures.
- Design includes analysis of function, reliability, and maintainability of systems and components.

In addition, the applicant should identify the structures, systems, and components by function(s), modes of operation, location, type(s) of actuation, relative importance in the control of radioactive material and radiation, applicable design criteria, and the chapter and section in the PSAR where these design criteria are applied to the specific structure, system, or component.

SHINE PSAR Section 3.1 states the SHINE facility and system design are based on defense-in-depth practices. Defense-in-depth practices means a design philosophy, applied from the outset and through completion of the design, that is based on providing successive levels of protection such that health and safety will not be wholly dependent upon any single element of the design, construction, maintenance, or operation of the facility. The net effect of incorporating defense-in-depth practices is a conservatively designed facility and system that will exhibit greater tolerance to failures and external challenges. PSAR Section 3.1 also provides sufficient information to guide the staff to the appropriate section of the PSAR where the design criteria for specific SSCs are discussed in detail. Additionally, PSAR Section 3.1 outlines the standards, guides, and codes applied to the design of the SSCs.

On the basis of its review, the staff has determined that the level of detail provided in SHINE PSAR Section 3.1 demonstrates SHINE has established adequate design criteria for its preliminary design and satisfies the applicable acceptance criteria of NUREG-1537, Part 2, Section 3.1. The staff concludes: (1) the design criteria are based on applicable standards, guides, codes, and criteria and provide reasonable assurance that the facility SSCs can be built and will function as designed and as required by the PSAR; and (2) the design criteria provide reasonable assurance that the public will be protected from radiological risks from operation.

Therefore, the staff finds that the design criteria of the SHINE facility SSCs meet the applicable regulatory requirements for the issuance of a construction permit in accordance with 10 CFR 50.35. Further technical or design information required to complete the safety analysis may reasonably be left for later consideration. The staff will confirm that the final design conforms to this design basis during the evaluation of SHINE's FSAR.

3.4.2 Meteorological Damage

The staff evaluated the sufficiency of the facility design features to cope with wind or other meteorological damage, as described in SHINE PSAR Section 3.2 using the guidance and acceptance criteria from Section 3.2, “Meteorological Damage,” of NUREG-1537, Part 2.

Consistent with the review procedures of NUREG-1537, Part 2, Section 3.2, the staff considered the description of the site meteorology to ensure that all SSCs that could suffer meteorological damage are considered, as presented in SHINE PSAR Section 3.2 and other relevant chapters of the PSAR. The design criteria are compatible with local architectural and building codes for similar structures. The design specifications for SSCs are compatible with the functional requirements and capability to retain function throughout the predicted meteorological conditions. The methods for determining the wind, tornado, and snow and ice loadings are summarized. In PSAR Section 3.4.2.6.3, “Site Design Parameters,” these loads are provided as site design parameters rather than as structural design loads. The combinations of the meteorological loads with other loads (i.e., dead loads and earthquake loads) for the structural analysis are provided in PSAR Section 3.4.

NUREG-1537, Part 1, Section 2.3.1, “General and Local Climate,” states, in part, “[t]he applicant should also estimate the weight of the 100-year return period snowpack and the weight of the 48-hour probable maximum precipitation for the site vicinity, if applicable, as specified by the USGS [U.S. Geological Survey]. Using these estimates for Chapter 3, the applicant should calculate the design loads on the roof of the building containing the IF and the RPF, and compare them with local building codes for similar types of structures.”

While SHINE PSAR Section 2.3.1.2.9, “Snowpack and Probably Maximum Precipitation (PMP),” contains an estimate of the snowpack load and probable maximum precipitation, as described in NUREG-1537, the information developed in PSAR Section 2.3.1.2.9 was not used to calculate the design loads described in PSAR Section 3.2.3, “Snow, Ice, and Rain Loading.” Therefore, in RAI 3.2-1 (Reference 14), the staff asked the applicant to estimate the weight of the 100-year return period snowpack and the weight of the 48-hour probable maximum precipitation for the site vicinity, if applicable, as specified by the USGS. The staff asked the applicant to calculate the design loads on the roof of the building containing the IF and the RPF and compare them with local building codes for similar types of structures. The applicant was also asked to provide additional information explaining why PSAR Section 3.2.3 does not utilize the snowpack and probably maximum precipitation data developed under PSAR Section 2.3.1.2.9 or update PSAR Section 3.2.3 with the data in PSAR Section 2.3.1.2.9, accordingly.

In response to RAI 3.2-1 (Reference 21), the applicant identified the location of this information in the PSAR and stated that a rain-on-snow surcharge load is not considered in the structural analysis because the SHINE facility is located in an area where the ground snow load (determined from Figure 7-1 of American Society of Civil Engineers [ASCE] 7-05, “Minimum Design Loads for Buildings and Other Structures”) is greater than 20 pounds per square foot (lb/ft^2). The applicant also stated that PSAR Sections 2.3.1.2.9 and 19.3.2.3.6, “Snowpack and Probable Maximum Precipitation (PMP),” contain an administrative error stating the units for the 50- and 100-year interval snowpacks are inches. Consistent with Figure 7-1 of ASCE 7-05, the units for the 50- and 100-year interval snowpacks are lb/ft^2. SHINE has updated its PSAR to resolve this error.

The staff finds this response is consistent with local building codes and industry standard and, therefore, satisfies the acceptance criteria of NUREG-1537, Part 2, Section 3.2, and

demonstrates an adequate methodology for a preliminary design. The staff will confirm that the final design conforms to this design basis during the evaluation of SHINE's FSAR.

On the basis of its review, the staff has determined that the level of detail provided on meteorological damage is adequate and supports the preliminary design and satisfies the applicable acceptance criteria of NUREG-1537, Part 2, Section 3.2. The staff concludes: (1) the design criteria and designs provide reasonable assurance that SSCs would continue to perform their safety functions as specified in the PSAR under potential meteorological damage conditions; and (2) the design criteria and designs use local building codes, standards, or other applicable criteria to ensure that significant meteorological damage at the facility site is very unlikely.

Therefore, the staff finds that the SHINE facility design features for coping with meteorological damage are sufficient and meet the applicable regulatory requirements for issuance of a construction permit in accordance with 10 CFR 50.35. Further technical or design information required to complete the safety analysis may reasonably be left for later consideration. The staff will confirm that the final design conforms to this design basis during the evaluation of SHINE's FSAR.

3.4.3 Water Damage

The staff evaluated the sufficiency of the facility design features to cope with predicted hydrological conditions, as described in SHINE PSAR Section 3.3 using the guidance and acceptance criteria from Section 3.3, "Water Damage," of NUREG-1537, Part 2.

Consistent with the review procedures of Section 3.3 of NUREG-1537, Part 2, the staff considered the site description to ensure that all safety-related SSCs with the potential for hydrological (water) damage, including the damage due to a potential inadvertent fire protection system (FPS) discharge, are considered in this PSAR section. For any such safety-related SSC, the staff reviewed the design bases to verify consequences are addressed and described in detail in appropriate chapters of the SHINE PSAR.

SHINE PSAR Section 3.3 provides the design-basis precipitation level (at grade), flood level (below grade), and maximum ground water level (below grade) for the SHINE facility. These levels are associated with the local probable maximum precipitation (PMP) and the local probable maximum flood (PMF) and are quantified in PSAR Section 2.4, "Hydrology." PSAR Section 2.4.2.3, "Effect of Local Intense Precipitation," states that a local PMP event creates a water level about level with grade. The first floor of the building is at least 4 inches (in.) above grade; therefore, water will not infiltrate the door openings in the case of a local PMP event. In PSAR Section 2.4.3, "Probable Maximum Flood on Streams and Rivers," SHINE estimates a local PMF event creates a water level approximately 50 feet (ft) (15.2 meters [m]) below grade. The lowest point of the facility is 29 ft (8.8 m) below grade; therefore, flooding would not cause any structural loading in the case of a local PMF event. There is no dynamic force on the structure due to precipitation or flooding. The lateral surcharge pressure on the structures due to the design PMP water level is calculated and does not govern the design of the below-grade walls. The load from water due to discharge of the FPS in the radiologically controlled area (RCA) is supported by slabs on grade. Drainage is provided for the mezzanine floor in the RCA to ensure that the mezzanine slab is not significantly loaded. The mezzanine floor slab is designed to a live load of 125 lb/ft^2 (610 kilograms per square meter [kg/m^2]). Therefore, SHINE concludes that the mezzanine floor slab is capable of withstanding any temporary water collection that may occur while water is draining from the mezzanine floor.

NUREG-1537, Part 1, Section 3.3, states, in part, that the applicant should specifically describe "… (2) the impact on systems resulting from instrumentation and control electrical or mechanical malfunction due to water, and (3) the impact on equipment, such as fans, motors, and valves, resulting from degradation of the electromechanical function due to water." The staff noticed that PSAR Section 3.3, discusses water damage and PSAR Section 3.3.1.1.2, "Compartment Flooding from Fire Protection Discharge," deals with flooding due to malfunction of the FPS, but Section 3.3 did not discuss the effects of discharge of the FPS on SSCs. Therefore, in RAI 3.3-1 (Reference 14), the staff asked that the applicant provide information on the effects of discharge from the FPS on SSCs. In response to RAI 3.3-1 (Reference 21), the applicant stated, in part, that "[t]he safety-related function(s) of SSCs that are subject to the effects of a discharge of the fire suppression system will be appropriately protected by redundancy, separation, and a fail-safe design of each SSC." The applicant also stated, in part, that "electrical equipment may be protected from unacceptable damage, if wetted by fire sprinkler system discharge, by sprinkler water shields or hoods, consistent with National Fire Protection Association (NFPA) 13" (Reference 34). Additionally, the applicant indicated that fire suppression system discharge in one fire area will not impact safety-related SSCs in adjacent fire areas.

The staff finds this response satisfies the acceptance criteria of NUREG-1537, Part 2, Section 3.3, and demonstrates adequate design criteria for a preliminary design.

On the basis of its review, the staff has determined that the level of detail provided on hydrological damage is adequate and supports the preliminary design and satisfies applicable acceptance criteria of NUREG-1537, Part 2, Section 3.3. The staff concludes that the design criteria and designs would protect against potential hydrological (water) damage and would provide reasonable assurance that SSCs would continue to perform required safety functions, would not cause unsafe facility operation, would not prevent safe shutdown of the facility, and would not cause or allow uncontrolled release of radioactive material.

Therefore, the staff finds that the facility design features to cope with hydrological damage is sufficient and meets the applicable regulatory requirements for issuance of a construction permit in accordance with 10 CFR 50.35.

3.4.4 Seismic Damage

The staff evaluated the sufficiency of the facility design features in the case of a seismic event, as described in SHINE PSAR Section 3.4 using the guidance and acceptance criteria from Section 3.4, "Seismic Damage," of NUREG-1537, Part 2.

Consistent with the review procedures of Section 3.4 of NUREG-1537, Part 2, the staff considered the site description and historical data to ensure that the appropriate seismic inputs have been considered. For any SSC damage, the staff considered the extent to which a seismic event would impair the safety function of the SSC.

SHINE PSAR Section 3.4.4 discusses that seismic instrumentation will be solid-state triaxial time-history accelerometers at essential locations that enable the prompt processing of the data. Additionally, the accelerometers will operate during all modes of facility operation. Maintenance and repair procedures will be developed to keep the maximum number of accelerometers in service during facility operation. In addition, the accelerometers will include provisions for in-service testing, the capability of periodic channel checks during normal facility operation, and the capability for in-place functional testing.

SHINE PSAR Section 3.4.5.1, “Aircraft Impact Analysis,” provides an aircraft impact analysis since the SHINE facility is located near the SWRA.

SHINE PSAR Section 3.4.5.2, External Explosions,” provides an assessment of external explosions. Since SHINE is not a power reactor, the NRC Regulatory Guide 5.69, “Guidance for the Application of Radiological Sabotage Design-Basis Threat in the Design, Development and Implementation of a Physical Security Program that Meets 10 CFR 73.55 Requirements,” postulated explosions are not considered. Notwithstanding the above, SHINE was assessed for accidental explosions due to chemical reactions inside the facility, accidental explosions due to storage of hazardous materials outside the facility, and accidental explosions due to external transportation including aircraft impact.

SHINE PSAR Section 2.2.3.1.1, “Explosions,” provides the maximum overpressure at any safety-related area of the facility from any credible external source is less than 1 pounds per square inch (psi) (6.9 kilopascal [kPa]). This safety-related area is within the facility’s seismic boundary, and is thus protected by outer walls and roofs consisting of reinforced concrete that is strong enough to withstand the postulated external explosions defined in Regulatory Guide 1.91, Revision 1, “Evaluations of Explosions Postulated to Occur on Transportation Routes Near Nuclear Power Plants.”

NUREG-1537, Part 1, Section 3.4, “Seismic Damage,” states that the applicant should include information on the facility seismic design to provide reasonable assurance that the reactor could be shut down and maintained in a safe condition or that the consequences of accidents would be within the acceptable limits in the event of potential seismic events. To verify that seismic design functions are met, the applicant should give the bases for the technical specifications. NUREG-1537, Part 2, Section 3.4, states that the application should provide sufficient information to conclude that the design to protect against seismic damage provides reasonable assurance that the facility SSCs will perform the necessary safety functions described and analyzed. On the basis of its review, the staff has determined that the level of detail provided on seismic damage is adequate and satisfies the applicable acceptance criteria of NUREG-1537, Section 3.4, for a preliminary design.

SHINE PSAR, Section 3.4.2.2, “Soil-Structure Interaction Analysis,” reports that Soil-Structure interactions are performed separately for mean, upper bound, and lower bound soil properties to represent potential variations of the in situ and backfill soil conditions surrounding the building using the computer program Structural Analysis Software System Interface (SASSI). In RAI 3.4-1 (Reference 14), the staff asked that the applicant provide: (a) the reference manual and revision used for SASSI, (b) additional information explaining whether the geotechnical investigations requested above also determined the dynamic soil properties used for the soil-structure interaction analyses, and (c) the report with details and results for the soil-structure interaction analyses.

In response to RAI 3.4-1 (Reference 21), the applicant stated, in part, that “the soil-structure interaction analysis . . . was performed using the SASSI2010 software, Version 1.0. The SASSI2010, Version 1.0 User’s Manual contains proprietary information and, therefore, is available for NRC review at Sargent and Lundy’s offices.” The soil-structure interaction analysis used equivalent linear elastic material properties because the frequency domain analysis

method in SASSI requires the use of elastic material properties. The applicant used the following approach to determine the equivalent linear material properties for the dynamic analyses:

(1) Shear wave and compression wave test results from Table A-1 of the Preliminary Geotechnical Engineering Report . . . were obtained and considered as the best-estimate (mean) soil properties (G_{BE}). The soil test results provided mechanical properties at low shear strain level.

(2) Free field site response analyses were conducted for input seismic motions using the SHAKE2000 computer program to determine the shear strain compatible shear modulus and damping values for the design-basis seismic input motion. SHAKE2000 uses an iterative nonlinear procedure to determine strain compatible soil properties from the geotechnical investigation results.

(3) The strain compatible soil properties obtained from the above procedure were input to SASSI and seismic analyses using the frequency domain method were conducted to determine seismic responses of the structure and to develop in-structure response spectra.

Additionally, the applicant stated, in part, that "[o]nly the best-estimate soil case is reported for the seismic analysis in [PSAR Section 3.4]. The variation of the soil properties will be considered in the final seismic analysis. Upper bound and lower bound soil properties (G_{UB} and G_{LB}) . . . and the coefficient of variation (COV) will be determined in accordance with [NUREG-0800, "Standard Review Plan for the Review of Safety Analysis Reports for Nuclear Power Plants: LWR Edition," Section 3.7.2, "Seismic System Analysis"], and the results of the final seismic analysis will be provided in the FSAR." The applicant also provided Calculation 2013-02413, "Soil-Structure Interaction Analysis of Shine Medical Isotope Production Facility for Design Seismic Event," Revision 0 (Reference 22). Following the receipt of SHINE's FSAR, the staff will confirm that the issue described above has been resolved in the final seismic analysis.

The staff finds this response satisfies the acceptance criteria of NUREG-1537, Part 2, Section 3.4 and demonstrates adequate design criteria for a preliminary design.

NUREG-1537, Part 1, Section 3.4, states, in part, that "the applicant should specify and describe the SSCs that are required to maintain the necessary safety function if a seismic event should occur . . . facility seismic design should provide reasonable assurance that the reactor could be shut down and maintained in a safe condition or that the consequences of accidents would be within the acceptable limits." In addition, NUREG-1537, Part 2, Section 3.4, states, in part, that the "review should include the designs and design bases of structures, systems, and components that are required to maintain function in case of a seismic event at the facility site." The finding required is that the facility design should provide reasonable assurance that the reactor can be shut down and maintained in a safe condition. Therefore, in RAI 3.4-2 (Reference 14), the staff asked that the applicant provide a comprehensive description of the SHINE facility structures required to maintain necessary safety functions should a seismic event occur.

In response to RAI 3.4-2 (Reference 21), the applicant described the SHINE IF and RPF structures necessary to provide safety functions. These structures included the supercells and tank farm, which make up the RCA. SASSI Thick concrete walls and roofs encase each

irradiation unit (IU) in a concrete vault, which is seismically designed. Additionally, IUs are housed within the IF and are separated from the RPF within the seismic boundary, as shown in SHINE PSAR Figure 1.3-2, "Production Building Floor Plans Preliminary Arrangement." SHINE PSAR Figure 1.3-2 also shows the control room, battery rooms, uninterruptable power supply rooms, and other miscellaneous support rooms to the west. The RCA and these areas to the west of the RCA are part of the seismic boundary and are classified as Seismic Category I. These areas contain the safety-related SSCs. The applicant described the construction of these structures and stated that the concrete walls and slabs are designed for axial, flexural, and shear loads consistent with American Concrete Institute (ACI) 349-06, "Code Requirements for Nuclear Safety-Related Concrete Structures" (Reference 106). The applicant stated other areas of the facility contain non-safety-related equipment and, therefore, those areas are not Seismic Category I.

Further, the applicant stated that during a seismic event, the forces will be transmitted through the structural reinforced concrete shear walls to the foundation mat and, ultimately, the soil. SHINE PSAR Section 3.4.2.6.4.7, "Soil Pressure," describes how sub-grade walls of the facility are designed to resist the dynamic soil pressure loads that may occur during a seismic event.

The staff finds this response satisfies the acceptance criteria of NUREG-1537, Part 1 and 2, Section 3.4 and demonstrates adequate design criteria for a preliminary design. The staff will confirm that the final design conforms to this design basis during the evaluation of SHINE's FSAR.

NUREG-1537, Parts 1 and 2, Section 3.4, notes that acceptable seismic performance has been established in ANSI/ANS-15.7, "Research Reactor Site Evaluation." With regard to seismic design, Section 3.2(2) of ANSI/ANS 15.7 states, "[r]eactor safety related structures and systems shall be seismically designed such that any seismic event cannot cause an accident which will lead to dose commitments in excess of those specified in 3.1."

SHINE PSAR, Section 3.4.2.6.5, "Structural Analysis Model," reports that a three-dimensional finite element structural analysis model of the SHINE facility structure was created using the SAP2000 computer program. Additionally, SHINE PSAR, Section 3.4.2.6.6, "Structural Analysis Results," reports structural analysis results were obtained from the SAP2000 model. In RAI 3.4-3 (Reference 14), the staff asked that the applicant provide the reference manual and revision for the SAP2000 computer program that was used. In RAI 3.4-4 (Reference 14), the staff asked that the applicant provide the report with details and results for the SAP2000 finite element structural analyses.

In response to RAI 3.4-3 (Reference 21), the applicant stated that "Version 14.1 of the SAP2000 computer program was used to develop the three-dimensional finite element model of the SHINE facility structure. The SAP2000 reference manual contains proprietary information and, therefore, is available for NRC review at Sargent and Lundy's offices." In response to RAI 3.4-4 (Reference 21), the applicant provided Calculation 2013-01989, "Conceptual Design of Hardened SHINE Facility Structural Elements," Revision 0, which contains the details and results of the SAP2000 finite element analysis.

The staff finds that these responses satisfy the acceptance criteria of NUREG-1537, Part 2, Section 3.4, and demonstrate adequate design criteria for a preliminary design. The staff will confirm that the final design conforms to this design basis during the evaluation of SHINE's FSAR.

NUREG-1537, Part 1, Section 3.5, “Systems and Components,” states, in part, that the applicant should provide “the design bases for the systems and components required to function for safe reactor operation and shutdown.” This should include, at a minimum, the protective and safety systems; the electromechanical systems and components associated with emergency cooling systems, reactor room ventilation, confinement systems; and other systems that may be required to prevent uncontrolled release of radioactive material. The design criteria should include the conditions that are important for the reliable operation of the systems and components (e.g., dynamic and static loads, number of cyclic loads, vibration, wear, friction, and strength of materials).

NUREG-1537, Part 2, Section 3.5, “Systems and Components,” states, in part, that the reviewer should conclude there is sufficient information for the design bases of the electromechanical systems and components to give reasonable assurance that the facility systems and components will function as designed to ensure safe operation and safe shutdown of the facility. SHINE PSAR, Section 3.4.3 states that seismic qualification of subsystems and equipment was completed using five methods. In RAI 3.4-5, the staff asked that the applicant provide the details and results for seismically qualifying the SHINE facility subsystems and components. The staff also requested the applicant include an applicable explanation of whether and how the nodal accelerations (at the locations indicated in PSAR Figures 3.4-4 through 3.4-14 (Reference 35) are used for the dynamic analyses of equipment.

In response to RAI 3.4-5 (Reference 21), the applicant stated that seismic qualification of piping systems classified as safety-related will be analyzed using the method identified in SHINE PSAR Section 3.4.3. The details of this analysis will be provided in the SHINE FSAR. Additionally, the applicant stated that seismic qualification of components was achieved with one of the following methods: (1) qualification by analytical methods (including static analysis, simplified dynamic analysis, or detailed dynamic analysis); (2) qualification by testing (e.g., pull testing); or (3) a combination of the analytical and testing methods.

The staff finds these responses satisfy the acceptance criteria of NUREG-1537, Part 2, Section 3.4 and demonstrate adequate design criteria for a preliminary design. The staff will confirm that the final design conforms to this design basis during the evaluation of SHINE’s FSAR.

NUREG-1537, Part 2, Section 3.4, states that the applicant should demonstrate that all potential consequences from a seismic event are within the acceptable limits considered or bounded in the accident analyses of Chapter 13 to ensure that conditions due to a seismic event will not pose significant risk to the health and safety of the public. In addition, NUREG-1537, Part 1, Section 3.4, states that in order to verify that seismic design functions are met, the applicant should give the technical specifications necessary to ensure operability, testing, and inspection of associated systems, including instrumentation and controls. SHINE PSAR, Section 3.4.4 states that the seismic instrumentation operates during SHINE facility operation. The maintenance and repair procedures will keep the maximum number of instruments in service. The inservice testing provisions include periodic channel checks and the capability for in-place functional testing. In RAI 3.4-6 (Reference 14), the staff asked that the applicant: (a) provide a summary description of the data these instruments record in the event of felt earthquake motions (i.e., acceleration time histories); and, (b) provide an explanation of the data retrieval and processing procedure(s). Additionally, the staff asked that the applicant clarify whether a separate computer is required to view the digitized acceleration time histories and generate response spectra.

In response to RAI 3.4-6 (Reference 20), the applicant stated, in part, that:

> . . .neither NUREG-1537 nor the ISG augmenting NUREG-1537 require seismic instrumentation for research reactors or isotope production facilities. Seismic instrumentation is not required as referenced under 10 CFR Part 50, "Domestic Licensing of Production and Utilization Facilities," Appendix S, "Earthquake Engineering Criteria for Nuclear Power Plants," Section IV(a)(4) to or 10 CFR Part 100, "Reactor Site Criteria," Appendix A, "Seismic and Geologic Siting Criteria for Nuclear Power Plants," Section VI(a)(3), since the SHINE facility is not a nuclear power plant. Therefore, SHINE has decided not to install seismic instrumentation. The applicant stated that an Issues Management Report (IMR) has been initiated to remove the reference to installed seismic instrumentation from PSAR Section 3.4.4. Should a seismic event be felt at the SHINE facility . . . as stated in the SHINE Preliminary Emergency Plan [Reference 3]. The operators will place the plant in a safe condition until the event can be evaluated and the determination is made that safe operations can be commenced. Facility procedures will be used to systematically assess the operability and functionality of the plant SSCs. The magnitude of the event will be determined using information available from USGS or other authoritative source.

In Chapter 13, Section 13a.4.6, "External Events," of this SER, the staff determined that for events that cause facility damage, the damage is within the bounds discussed for other accidents and does not result in dose consequences and the consequences of all design-basis accident (DBA) external events have been analyzed and shown to be bounded by the maximum hypothetical accident (MHA). Therefore, SHINE response to this RAI is acceptable.

NUREG-1537, Part 2, Section 3.4, states that "[t]he applicant should demonstrate that all potential consequences from a seismic event are within the acceptable limits considered or bounded in the accident analyses of Chapter 13 to ensure that conditions due to a seismic event will not pose a significant risk to the health and safety of the public." The SHINE site location is near the SWRA. SHINE PSAR Section 3.4.5.1 outlines the methodology for conducting and evaluating small aircraft impact analyses for the seismic envelope design for external hazards. The potential locations for 25 aircraft impact analyses of the SHINE facility are listed.

SHINE PSAR Table 3.4-4, "Aircraft Impact Analysis Results," shows that the performance of all barriers is acceptable to prevent transport of radioactive materials to unrestricted areas. However, the staff noticed that the engineering report that describes the analyses' details states that all of the results are not referenced. In RAI 3.4-7 (Reference 14), the staff asked that the applicant provide the engineering report that describes the aircraft impact analyses' details that reports the results and also asked that the applicant to provide a summary of the results.

In its response to RAI 3.4-7 (Reference 21), the applicant provided Calculation 2013-01911, "Evaluation for Aircraft Impact," Revision 0, which contains the details and results of the aircraft impact analyses. The applicant stated that:

> Calculation 2013-01911 evaluates the initial design of the SHINE Medical Isotope Production Facility at Janesville, Wisconsin for effects of an accidental aircraft crash by aircrafts operating through the SWRA. As described in Calculation 2013-01911, Section 4.1, the Challenger 605 is selected as the design-basis

aircraft for performing the evaluations. Calculation 2013-01911, Figures 4.4.1-1 (A) and 4.4.1-1 (B), show the walls and roof slabs evaluated for the facility. Roof panels and walls are two-foot thick reinforced concrete with a design strength of 5000 psi. Roof slabs are supported on trusses spanning in the east-west direction. These trusses are supported on external walls and either on an internal wall running in the north-south direction or on a plate girder spanning in the north-south direction.

Evaluations are made for local damage and overall damage in Calculation 2013-01911, Sections 5.2 and 5.3, respectively. Local damage evaluation results show that the two-foot thick reinforced concrete panels do not scab under the impact from the engine of the impacting aircraft. Calculation results for perforation margin show that the condition of ACI 349-06, Paragraph F.7.2.3, is satisfied. Therefore, a punching shear evaluation in the overall response assessment is not necessary.

The overall damage evaluation is performed in Section 5.3 of the calculation, considering 25 cases of impact. Calculation 2013-01911, Section 4.4.4, describes the impact cases. Calculation 2013-01911, Table 6-1, and SHINE PSAR Table 3.4-4 summarize the acceptability of the 25 impact cases, provided stated conditions for reinforcement size and spacing, including shear ties, and provisions for truss members, including a non-linear analysis in the future to show that the acceptability of inelastic deformation, are met.

The staff finds that this response satisfies the acceptance criteria of NUREG-1537, Part 2, Section 3.4, and demonstrates adequate design criteria for a preliminary design. The staff will confirm that the final design conforms to this design basis during the evaluation of SHINE's FSAR.

NUREG-1537, Part 1, Section 3.4 states that the applicant should include information on the facility seismic design to provide reasonable assurance that the reactor could be shut down and maintained in a safe condition or that the consequences of accidents would be within the acceptable limits in the event of potential seismic events. NUREG-1537, Part 2, Section 3.4, states that the staff should find sufficient information to conclude that the design to protect against seismic damage provides reasonable assurance that the facility SSCs will perform the necessary safety functions described and analyzed.

While SHINE's response to RAI 3.4-1(b) (Reference 21) provided additional information on free field site response analyses using the SHAKE2000 computer program, the response did not include a reference for the version of the SHAKE2000 computer program used in SHINE's seismic analysis. In RAI 3.4-8 (Reference 16), the staff asked that the applicant provide the reference for the version of the SHAKE2000 computer program used in SHINE's seismic analysis. In its response to RAI 3.4-8 (Reference 24), the applicant provided that Version 3.5 of the SHAKE2000 computer program was used in the SHINE seismic analysis.

The staff finds this response satisfies the acceptance criteria of NUREG-1537, Part 2, Section 3.4 and demonstrates adequate design criteria for a preliminary design.

NUREG-1537, Part 1, Section 3.4, states, in part, that in order to verify that seismic design functions are met, "the applicant should give the bases for technical specifications necessary to ensure operability, testing, and inspection of associated systems, including instrumentation and

controls, if applicable." NUREG-1537, Part 2, Section 3.4, states, in part, that, "the applicant should demonstrate that the surveillance activities proposed provide reasonable assurance that the safety-related functions of the SSCs that are required to respond to, or mitigate the consequences of, seismic damage to the facility will be maintained."

SHINE PSAR Section 3.4.4, states that the seismic instrumentation operates during SHINE facility operation. The maintenance and repair procedures will keep the maximum number of instruments in service. The in-service testing provisions include periodic channel checks and the capability for in-place functional testing.

However, in its response to RAI 3.4-6 (Reference 20), SHINE stated that seismic instrumentation will not be installed at the SHINE facility, because it is not required to install such instrumentation under 10 CFR Part 50 or 10 CFR Part 100. SHINE instead stated, in part, that "procedures will be used to systematically assess the operability and functionality of the plant SSCs. The magnitude of the event will be determined using information available from the U.S. Geological Survey (USGS) or other authoritative source."

While the USGS and other authoritative sources could provide information such as the epicenter location or focal mechanism for a felt earthquake at the SHINE facility, the staff notes those sources cannot provide the acceleration time histories or response spectra experienced at the facility needed to conduct post-earthquake quantified evaluations and re-qualifications of the facility Seismic Category I and Seismic Category II SSCs. The staff needed additional information to determine that the safety-related functions of the SSCs that are required to respond to, or mitigate the consequences of, seismic damage to the facility will be maintained. Therefore, in RAI 3.4-9 (Reference 16), the staff asked that the applicant provide a discussion of the methodology that will be used to develop procedures for post-earthquake evaluations and re-qualifications of Seismic Category I and Seismic Category II SSCs without onsite seismic instrumentation recording information such as acceleration time histories and response spectra.

In response to RAI 3.4-9 (Reference 24), the applicant stated that seismic instrumentation is not required by Section IV(a)(4) of Appendix S to 10 CFR 50 or Section VI(a)(3) of Appendix A to 10 CFR Part 100, since the SHINE facility is not a nuclear power plant. However, SHINE has decided that for asset protection and business operations purposes, non-safety-related seismic instrumentation could assist with the timely determination of the accelerations experienced at the plant following a seismic event. Therefore, SHINE will acquire and install a non-safety-related seismic monitoring system to help establish the acceptability of continued operation of the plant following a seismic event. This system will provide acceleration time histories or response spectra experienced at the facility to assist in verifying that SSCs important to safety at the SHINE facility can continue to perform their safety functions. SHINE will provide an explanation of the data retrieval and processing procedure(s) and state whether or not a separate computer is required to view the digitized acceleration time histories and generate response spectra in the FSAR. Following the receipt of SHINE's FSAR, the staff will confirm that this issue has been resolved.

The staff finds this response satisfies the acceptance criteria of NUREG-1537, Part 2, Section 3.4, and demonstrate adequate design criteria for a preliminary design. The staff will confirm that the final design conforms to this design basis during the evaluation of SHINE's FSAR.

On the basis of its review, the staff has determined that the level of detail provided on seismic damage is adequate and supports the preliminary design and satisfies the applicable

acceptance criteria of NUREG-1537, Part 2, Section 3.4. The staff concludes that: (1) the design criteria and designs should provide reasonable assurance that SSCs would continue to perform required safety functions following a seismic event; and (2) the design to protect against seismic damage provides reasonable assurance that the consequences of credible seismic events will be considered and adequately protect public health and safety.

Therefore, the staff finds that the facility design features to cope with seismic damage is sufficient and meets the applicable regulatory requirements and guidance for issuance of a construction permit in accordance with 10 CFR 50.35. Further technical or design information required to complete the safety analysis may reasonably be left for later consideration. The staff will confirm that the final design conforms to this design basis during the evaluation of SHINE's FSAR.

3.4.5 Systems and Components

The staff evaluated the sufficiency of the facility design features for systems and components, as described in SHINE PSAR Section 3.5 using the guidance and acceptance criteria from Section 3.5 of NUREG-1537, Part 2 and the ISG Augmenting NUREG-1537, Part 2.

Consistent with the review criteria of NUREG-1537, Part 2, Section 3.5, the staff verified that the design bases for the SSCs that are required to ensure safe operation of the facility are described in detail in Section 3.5 or other PSAR sections in sufficient detail.

Additionally, SHINE PSAR Section 3.5 states the following:

> Sections 3.5a and 3.5b discuss the conditional application of Appendix A to 10 CFR 50, "General Design Criteria for Nuclear Power Plants," and 10 CFR 70.64, "Requirements for New Facilities or New Processes at Existing Facilities," as good design practice. Although not mandatory, these design criteria provide a rational basis from which to proceed.

Based on this statement, the staff review also included PSAR Table 3.5a-1, "Appendix A to 10 CFR 50 General Design Criteria Which Have Been Interpreted as They Apply to the SHINE Irradiation Facility," and PSAR Table 3.5b-1, "Baseline and General Design Criteria for Radioisotope Production Facility."

Further, consistent with the guidance in the ISG augmenting NUREG-1537, Part 2, Section 3.5, while compliance with 10 CFR 70.64 is not required for this type of facility, if the applicant can adequately address the baseline design criteria in 10 CFR 70.64, it would be found acceptable by the staff. Therefore, since the SHINE PSAR compares the facility against the baseline design criteria of 10 CFR 70.64, the additional basis of NUREG-1520, "Standard Review Plan for the Review of a License Application for a Fuel Cycle Facility," Section 3.4.3.2, was included in the review which encompassed how the design of the facility addresses each baseline design criterion.

In 10 CFR 50.2, "Definitions," safety-related SSCs are defined as follows:

> *Safety-related structures,* systems and components means those structures, systems and components that are relied upon to remain functional during and following design-basis events to assure:

(1) The integrity of the reactor coolant pressure boundary;

(2) The capability to shut down the reactor and maintain it in a safe shutdown condition; or,

(3) The capability to prevent or mitigate the consequences of accidents which could result in potential offsite exposures comparable to the applicable guideline exposures set forth in § 50.34(a)(1) or § 100.11 of this chapter, as applicable.

In 10 CFR 70.4, "Definitions," items relied on for safety (IROFS) are defined as follows:

> *Items relied on for safety* mean structures, systems, equipment, components, and activities of personnel that are relied on to prevent potential accidents at a facility that could exceed the performance requirements in § 70.61 or to mitigate their potential consequences. This does not limit the licensee from identifying additional structures, systems, equipment, components, or activities of personnel (i.e., beyond those in the minimum set necessary for compliance with the performance requirements) as items relied on for safety.

SHINE PSAR, Section 3.5.1, "Classification of Systems and Components Important to Safety," discusses the classification of SSCs. SHINE PSAR, Section 3.5.1.1, "Nuclear Safety Classifications for SSCs," states that SHINE uses a modified definition from 10 CFR 50.2 to develop the definition of safety-related SSCs, where appropriate, utilizing a portion of 10 CFR 70.4. SHINE PSAR, Section 3.5.1.2, "Quality Assurance (Quality Group Classifications for SSCs)," discusses how safety-related SSCs and safety-related activities will be classified as QL-1. Selected SSCs and activities supporting or protecting the safety function of safety-related equipment will be classified as QL-2. The section goes on to state that safety-related SSCs shall have "the full requirements of the Quality Assurance Program Description (QAPD) in accordance with an approved Quality Assurance Plan (QAP)." In addition, SHINE PSAR Section 3.5.2, "Seismic Classification," states, in part, that safety-related SSCs are Seismic Category I.

Therefore, in RAI 3.5-1 (Reference 14), the staff asked that the applicant: (1) provide the basis referencing the definition of safety-related SSCs in 10 CFR 50.2, the basis for using a modified definition of safety-related SSCs, the basis for utilizing only a portion of the requirements of 10 CFR 70.61, "Performance requirements," and the basis for why the 10 CFR 70.61 requirements do not encompass SHINE's modified definition of safety-related SSCs; (2) define and provide the basis for the difference between QL-1 and QL-2; and (3) if there are two SSCs (i.e., pipe, valve, tank, heat exchanger, etc.) that must meet the same performance characteristics but one SSC is governed by QL-1 and the other by QL-2, the staff asked that the applicant describe how they will be physically different. Finally, with respect to Seismic Category I, the staff asked that the applicant clarify the differences in Seismic Category I acceptance criteria under QL-1 and QL-2.

In response to RAI 3.5-1 (Reference 20), the applicant stated that it referenced 10 CFR 50.2 definition of safety-related because it incorporates specific, measurable attributes that are at least equivalent to the definition of safety-related items contained in ANSI/ANS-15.8-1995 (R2013), "Quality Assurance Program Requirements for Research Reactors." Section 1.3 of ANSI/ANS-15.8-1995 (R2013) states the following:

> Safety-related items. Those physical structures, systems, and components whose intended functions are to prevent accidents that could cause undue risk to the health and safety of workers and the public, or to the research reactor's programs; and to control or mitigate the consequences of such accidents.

The applicant stated that the reference of the 10 CFR 50.2 definition of safety-related SSCs for the IF results in a clear demarcation of safety-related equipment, principally the boundary necessary to contain fissile material, the ability to terminate the fission process and ensure its safe condition after shutdown, and ensure that releases of materials in accidents are limited to ensure 10 CFR Part 20, "Standards for Protection Against Radiation," regulations are met. Further, the applicant asserted when considering the 10 CFR 50.2 definition as written, Items (1) and (2) of the definition do not apply to any SSCs in the facility, as SHINE does not have a reactor. Components would be classified according to Item (3) alone. Therefore, by modifying Items (1) and (2) of the definition, the applicant has incorporated additional SSCs into the safety-related classification. The applicant stated that this modified definition and the accident analysis process detailed in PSAR Chapter 13 ensures that the health and safety of the worker and the public off-site are adequately protected through proper selection of safety-related SSCs to prevent accidents and control and mitigate their consequences and by ensuring that worker and public doses are less than the limits of 10 CFR Part 20 during potential accidents. Finally, the applicant determined that a modification of the definition of safety-related will ensure that SSCs important to safety in the RPF are completely encompassed by the safety-related definition. SHINE has incorporated chemical and criticality-safety aspects into the classification of safety-related SSCs. SHINE is proposing this alternate methodology for designating SSCs important to safety for both the IF and RPF based on the SHINE definition of safety-related.

The applicant identified a complete set of initiating events and accidents for the entire facility in the Integrated Safety Analysis (ISA) performed for the preliminary design. The ISA will be updated as part of the detailed design with any necessary changes and will be renamed the "SHINE Accident Analysis," following issuance of the operating license. The applicant states the ISA and the SHINE facility design achieve the following objectives: (1) ensures that the complete set of initiating events has been considered; (2) categorizes the initiating events and accidents by type, and determines the limiting cases in each group to be quantitatively analyzed; (3) meets 10 CFR Part 20 acceptance criteria (i.e., 5 roentgen equivalent man [rem] total effective dose equivalent [TEDE] to the worker and 100 millirem [mrem] TEDE to a member of the public off-site) for the consequences of each postulated event; (4) ensures the necessary SSCs are included in the design to prevent criticality; and, (5) ensures the necessary SSCs are included in the design to prevent undue risk to the health and safety of workers and the public from accidents involving chemicals produced from licensed material.

The applicant stated analyses will be performed to identify the SSCs in the facility that are necessary to prevent or mitigate accidents, consistent with applicable acceptance criteria. Those SSCs will be designated safety-related. The results of the analyses and the designations of safety-related SSCs will be included in the PSAR and FSAR. The SSCs meeting the provisions of 10 CFR 50.36, "Technical specifications," will be included in the facility's technical specifications and will be subject to the provisions of 10 CFR 50.90, "Application for amendment of license, construction permit, or early site permit."

The applicant also provided that a configuration management program will be established to evaluate, implement, and track each change to the site, structures, processes, systems, equipment, components, computer programs, and activities of personnel that affect the safety

analysis or licensing basis. The applicant also stated that following issuance of the operating license, changes to the SHINE facility that affect the accident analysis will be resolved using the failure modes and effects analysis (FMEA) or another suitable accident analysis technique to assure that the SHINE facility configuration is maintained consistent with the licensing basis. Changes to the accident analysis will be evaluated under 10 CFR 50.59, "Changes, tests and experiments," to determine if NRC approval is required. If so, 10 CFR 50.90 will be used.

The applicant also provided the following updated definition of safety-related:

> Safety-Related SSCs: Those SSCs that are relied upon to remain functional during normal conditions and during and following design basis events to assure:
>
> 1. The integrity of the primary system boundary (PSB);
> 2. The capability to shut down the TSV [target solution vessel] and maintain the target solution in a safe shutdown condition;
> 3. The capability to prevent or mitigate the consequences of accidents which could result in potential exposures comparable to the applicable guideline exposures set forth in 10 CFR Part 20;
> 4. That the potential for an inadvertent criticality accident is not credible;**
> 5. That acute chemical exposures to an individual from licensed material or hazardous chemicals produced from licensed material could not lead to irreversible or other serious, long-lasting health effects to a worker or cause mild transient health effects to any individual located outside the owner controlled area; or,
> 6. That an intake of 30 mg [milligrams] or greater of uranium in soluble form by any individual located outside the owner controlled area does not occur.
>
> ** The applicant later revised this part of the definition in a response to RAI 3.5-6, which is discussed below.

Related to quality levels, the applicant provided a revised QAPD, which included an updated discussion on the graded approach to quality. The QAPD realigns and redefines the quality levels as follows:

- QL-1 shall implement the full measure of the QAPD and shall be applied to safety-related SSCs.
- QL-2 will include the non-safety-related quality activities performed by the licensee that are deemed necessary by SHINE to ensure the manufacture and delivery of highly reliable products and services to meet or exceed customer expectations and requirements.

The applicant stated that as a result of further design work and this response, the ISA and ISA Summary will be reviewed and updated. Further, the applicant will incorporate additional changes into to the SHINE FSAR, as a result of updates to the ISA and ISA Summary.

As discussed above, the applicant modified the definition of safety-related in the SHINE PSAR to encompass those SSCs that are required for safety in both the IF and the RPF. The components meeting the revised safety-related definition are classified as QL-1, and therefore, there will be no difference in regards to the quality classification or Seismic Category I acceptance criteria for two SSCs that must meet the same performance characteristics.

The staff finds the applicant's response to RAI 3.5-1, as revised by the response to RAI 3.5-6 (discussed below) is consistent with: (1) the guidance provided in the ISG augmenting NUREG-1537, Part 1, (2) ISA methodologies as described in 10 CFR Part 70, "Domestic Licensing of Special Nuclear Material," and NUREG-1520, and (3) application of the radiological and chemical consequence and likelihood criteria contained in the performance requirements of 10 CFR 70.61. Additionally, the staff finds this response consistent with the ISG augmenting NUREG-1537, Part 1, which states, in part, that "[a]pplicants may propose alternate accident analysis methodologies, alternate radiological and chemical consequence and likelihood criteria, alternate safety features, and alternate methods of assuring the availability and reliability of the safety features."

NUREG-1537, Part 2, Section 3.5 "Acceptance Criteria," states, in part, that the design criteria should include the "response to transient and potential accident conditions analyzed in the safety analysis report (SAR)."

SHINE PSAR, Section 3.5.2 states, in part, that SSCs that have "[t]he capability to prevent or mitigate potential accidents at the facility that could exceed the performance requirements in 10 CFR 70.61," are designated Seismic Category I. The performance requirements include mitigating the effects of an "acute chemical exposure to an individual from licensed material or hazardous chemicals produced from licensed material…." SHINE PSAR Figure 1.3-2 has the following notation: "Heavy Outline Denotes Seismic Boundary." In addition, SHINE PSAR Table 3.5-1, "System and Classifications," (pages 3-52 – 3-55), states that the facility structure is safety-related, Seismic Category I, and QL-1. There is no mention of the seismic classification of the north and south portions of the building outside the seismic boundary, which include chemical storage facilities. The staff noted that this statement appeared to infer that these portions of the building are non-seismic and in a postulated design-basis earthquake, they could collapse. If all of the access points into the "seismic boundary" are located on the north and south sides of the building, it is possible that personnel would not be able get in or out of the building after a design-basis earthquake and individuals could be exposed to licensed material and/or hazardous chemicals. Therefore, in RAI 3.5-2 (Reference14), the staff asked that the applicant provide clarification on the seismic design of the north and south portions of the building and address how the 10 CFR 70.61 performance requirements are met.

In response to RAI 3.5-2 (Reference 20), the applicant stated that the RPF building seismic portion will be provided with at least two safety-related seismic access points in the final design, enabling personnel to exit the building following a seismic event. These exits will ensure that personnel will be able to exit the building and, therefore, will not be exposed to licensed material, a chemical exposure from licensed material, or hazardous chemicals produced from licensed material in excess of the guidelines described in the PSAR. Following the receipt of SHINE's FSAR, the staff will confirm that this issue has been resolved.

The staff finds this response satisfies the acceptance criteria of NUREG-1537, Part 2, Section 3.5, and demonstrates adequate design criteria for a preliminary design. The staff will confirm that the final design conforms to this design basis during the evaluation of SHINE's FSAR.

NUREG-1537, Part 2, Section 3.5, “Acceptance Criteria,” states, in part, that the design criteria should include “response to transient and potential accident conditions analyzed in the safety analysis report (SAR).”

SHINE PSAR Table 3.5-1 states the following:

> Radiologically Controlled Area Ventilation Zone 1 (RVZ1) is safety-related, QL-1, and Seismic Category I;
>
> Radiologically Controlled Area Ventilation Zone 2 (RVZ2) is safety-related, QL-1, and Seismic Category I; and
>
> Radiologically Controlled Area Ventilation Zone 3 (RVZ3) is non-safety-related, QL-3, and Seismic Category III.

SHINE PSAR Section 9a.2.1.1, “Radiologically Controlled Area Ventilation System,” does not state that one normally goes through RVZ3 to get to RVZ1 or RVZ2, but such a pathway can be inferred from PSAR Figure 1.3-2. Thus, RVZ3 would be used for access and egress after a postulated event with a loss of off-site power (LOOP) or a design-basis earthquake with a power LOOP.

Therefore, in RAI 3.5-3 (Reference 14), the staff asked that the applicant provide the basis for designating the RVZ3 as non-safety-related, QL-3, and Seismic Category III, or provide a discussion of the alternate method of access/egress of the RVZ1 and RVZ2.

In response to RAI 3.5-3 (Reference 21), the applicant stated that RVZ3 is designated as non-safety-related and QL-2 because it does not meet the SHINE definition of a safety-related SSC (See also RAI 3.5-1 response), in that:

1. RVZ3 is not relied upon to maintain the integrity of the primary system boundary (PSB).

2. RVZ3 is not relied upon to shut down the target solution vessel (TSV) or maintain the target solution in a safe shutdown condition.

3. RVZ3 is not relied upon to prevent or mitigate the consequences of accidents which could result in potential exposures comparable to the applicable guideline exposures set forth in 10 CFR 20. This function, as it relates to ventilation, is accomplished by RCA Ventilation Zone 1 (RVZ1) and RCA Ventilation Zone 2 (RVZ2), the ventilation systems used in areas containing radiological material.

4. RVZ3 is not relied upon to assure that an inadvertent criticality accident is not credible.

5. RVZ3 is not relied upon to assure that acute chemical exposures to an individual from licensed material or hazardous chemicals produced from licensed material could not lead to irreversible or other serious, long-lasting health effects to a worker or cause mild transient health effects to any individual located outside the owner controlled area. This function, as it

relates to ventilation, is accomplished by RVZ1 and RVZ2, the ventilation systems used in areas containing licensed material.

6. RVZ3 is not relied upon to ensure that an intake of 30 mg or greater of uranium in soluble form by any individual located outside the owner controlled area does not occur. This function, as it relates to ventilation, is accomplished by RVZ1 and RVZ2, the ventilation systems used in areas containing uranium in soluble form.

   RVZ3 is classified as Seismic Category III because it is a non-safety-related system, and does not adversely impact SSCs important to safety that are designed to withstand the effects of a design basis earthquake and remain functional.

The applicant further stated that contamination would not be expected with a loss-of-offsite power because there are no external events that result in both a loss-of-offsite power and a radiological release. However, if the RVZ3 fans are not operating during a radiological event, then emergency response consistent with the SHINE Preliminary Emergency Plan will evaluate and control contamination.

The staff finds that SHINE provided an adequate justification for the classification of the RVZ3 for preliminary design based on: (1)the response to RAI 3.5-3; (2) the information provided in response to RAI 9a2.1-3; (3) the fact that RVZ3 consists only of the airlocks that provide access to the RCA; (4) the airlocks are within the RCA boundary and thus within the Seismic Category I structure; (5) forced air is supplied to the airlocks via flow control valves (i.e., there are no powered fan systems associated with the airlocks, their air supply comes from safety-related RCA heating, ventilation, and air conditioning [HVAC] systems); and (6) forced air supplied to RVZ3 is then transferred to RVZ2 spaces through engineered airlock door leakage pathways. The staff will further evaluate SHINE's classification of RVZ3 during its evaluation of SHINE's FSAR.

In SHINE PSAR Table 3.5-1, the facility instrument air system, the facility control room, the stack release monitoring system, the health physics monitors, the facility breathing air Stack Release Monitoring System, the Health Physics Monitors, the Facility Breathing Air system, the facility data and communications system, the emergency lighting system, the facility ventilation zone 4 system, and the Lighting System are all non-safety-related, QL-3, Seismic Category III and the standby diesel generator system is non-safety-related, QL-3, Seismic Category II. In addition, the PSAR states that RCA ventilation systems require power to operate.

Therefore, in RAI 3.5-4 (Reference 14), the staff asked that the applicant provide a discussion that addresses how facility personnel will be able to determine that the facility is in a safe condition (or put the facility in a safe condition) and how the facility will be maintained in a safe condition, in the event of a postulated design-basis earthquake with a LOOP and unavailability of the systems above.

In response to RAI 3.5-4 (Reference 20), the applicant stated that in the event of a postulated design-basis earthquake with a loss-of-offsite power, facility personnel will be able to determine if the facility is in a safe condition and maintain it in such a state as necessary using safety-related equipment. The SHINE facility control room is part of a safety-related, Seismic Category I structure. The applicant also stated that PSAR Table 3.5-1 incorrectly stated that the facility control room is a non-safety-related (NSR), Seismic Category III structure and that

designation of the facility control room will be corrected in the FSAR. The control room contains the necessary safety-related controls and indicators to maintain the facility in a safe condition. In the event of a loss-of-offsite power, safety-related equipment either fails to its safe condition or is powered by the uninterruptible electrical power supply system (UPSS). The automatic safety systems designed to protect the public and maintain the facility in a safe shutdown condition operate without operator intervention. The safety-related RCA ventilation isolates, as necessary, to contain radioactive releases. The isolation components are fail-safe and move to their safe position upon a loss of power. The applicant's response to RAI 3.5-1 provided the SHINE definition of safety-related SSCs. The following systems are not necessary for personnel to determine that the facility is in a safe condition or to place the facility in a safe condition, and are not defined as safety-related using the SHINE definition of safety-related SSCs: facility instrument air system, stack release monitoring system, health physics monitors, facility breathing air system, facility data and communication system, lighting system, emergency lighting system, and FVZ4 standby diesel generator system. The applicant noted that none of these systems are used to prevent or mitigate the consequences of accidents, as presented in PSAR Chapter 13.

The staff finds the applicant's response addresses how it will meet the requirements of 10 CFR 50.34(a)(4) and demonstrates adequate design criteria for a preliminary design. The staff will confirm that the final design conforms to this design basis during the evaluation of SHINE's FSAR.

SHINE PSAR Section 3.5.2 discusses the use of Seismic Category II SSCs over Seismic Category I SSCs (Seismic II/I). SHINE PSAR, Table 3.5a-1 as (pages 3-88 – 3-93) discusses how the facility complies with 10 CFR Part 50, Appendix A, "General Design Criteria." Based on SHINE's proposed implementation of the general design criteria, the NRC staff needs clarification on the following considerations with respect to Seismic Categories II/I:

> General Design Criterion 1 provides that structures, systems, and components important to safety are to be designed, fabricated, erected, and tested to quality standards. Thus, General Design Criterion 1 applies to Seismic II/I since the Seismic II structures, systems, and components should be properly designed, fabricated, and installed to reduce the likelihood of a Seismic Category II structure, system, or component coming loose and falling on and damaging a Seismic Category I structure, system, or component.
>
> General Design Criterion 2 provides that structures, systems, and components important to safety are to be designed to resist the effects of natural phenomena like earthquakes. General Design Criterion 2 applies to Seismic II/I because it specifies the natural phenomenon (i.e., earthquake) that must be considered in the design of these structures, systems, and components. If not considered, an earthquake could loosen a Seismic Category II structure, system, or component to the extent that it could cause an unsafe condition (i.e., fall on and damage a Seismic Category I structure, system, or component).
>
> General Design Criterion 4 provides that structures, systems, and components important to safety are to be protected against the effects of internally-generated missiles. General Design Criterion 4 applies to Seismic Category II structures, systems, and components because it specifies protection against the effects of internally-generated missiles (i.e., fall on and damage of a Seismic Category I structure, system, or component).

The staff notes that, based on the considerations above, dropped loads could cause the potential release of radioactive materials, a criticality accident, or damage to essential safety equipment, which could cause unacceptable radiation exposures.

Therefore, in RAI 3.5-5 (Reference 14), the staff asked that the applicant provide details of the SHINE Seismic II/I program that will be put into place, including the Seismic Category II structural integrity criteria and the Seismic Category II support criteria.

In response to RAI 3.5-5 (Reference 21), the applicant referred to PSAR Section 3.5.2, which states that structures, components, equipment, and systems designated as safety-related are classified as Seismic Category I. The applicant put criteria in place for Seismic Category II SSCs to ensure that they do not interfere with Seismic Category I SSCs as described below:

> Criteria for Seismic Category II Structures
>
> Nonsafety-related structures are designed with the following two general criteria:
>
> 1. SSCs in nonsafety-related structures attached to a safety-related structure or separated from a safety-related structure by a distance less than or equal to the height of the nonsafety-related structure are designed for abnormal and extreme environmental loads if the failure of the nonsafety-related SSC could result in damage to safety-related SSCs. However, if the failure of the nonsafety-related SSC will not result in damage to safety-related SSCs, the nonsafety-related SSC need not be designed for abnormal and extreme environmental load combinations.
>
> 2. Nonsafety-related SSCs separated from a safety-related structure by a distance greater than the height of the nonsafety-related structure need not be designed for abnormal and extreme environmental load combinations.
>
> Criteria for Nonsafety-Related SSCs in Safety-Related Structures
>
> Nonsafety-related SSCs within safety-related structures (i.e., within the seismic boundary) are evaluated for II/I interaction. Seismic interaction effects to be considered include proximity, differential displacements, structural failure and falling, water spray or flood, and fire.

The applicant stated that depending on the type of component, non-safety-related SSCs categorized as II/I are evaluated or qualified using the following methods to demonstrate that they do not impact safety-related SSCs:

(1) Detailed evaluation using structural analysis or consideration of seismic loading in the development of allowable spans and support configurations.

(2) Anchorage design and analysis to assure that the components do not interact with adjacent safety-related SSCs or become missiles during a seismic event.

(3) Qualitative evaluation using considerations such as weight to assess the potential impact on safety-related components (e.g., a lightweight object impacting a large diameter pipe, or a small bore pipe impacting the rugged casing of a pump).

(4) Specifications for commodity or architectural items can include requirements for performance during a seismic event (e.g., cabinet door swing limits and lighting supports designed for seismic loads).

The staff finds the applicant's response addresses how the applicant will meet the requirements in 10 CFR 50.34(a)(4) and demonstrates adequate design criteria for a preliminary design. The staff will confirm that the final design conforms to this design basis during the evaluation of SHINE's FSAR.

SHINE PSAR Section 3.5.1 discusses the classification of SSCs. SHINE PSAR Section 3.5.1.1 states in part, that "SHINE uses a modified definition from 10 CFR 50.2 to develop the definition of safety-related SSCs, where appropriate," and utilizes a portion of 10 CFR 70.4 for the definition of IROFS SSCs.

In its responses to RAIs 3.5-1 and 3.5-4, the applicant proposed a six-part definition of safety-related SSCs, which modifies the 10 CFR 50.2 definition of safety-related SSCs to include performance requirements for SSCs important to safety in the SHINE facility, and eliminates the classification of certain SSCs as IROFS. While five of the six parts of this modified definition are performance-based, the fourth part of this definition (i.e., "[t]hat the potential for an inadvertent criticality accident is not credible") is not performance-based.

Additional information was needed for the NRC staff to evaluate the adequacy of SHINE's modified definition of safety-related SSCs. Furthermore, additional information was needed for the NRC staff to determine the relationship between the definition of a basic component in 10 CFR 21.3 to SHINE's proposed definition of safety-related SSCs. Additionally, the NRC staff notes that despite SHINE's statement, this revised definition of safety-related SSCs eliminates the classification of certain SSCs as items relied on for safety, the term "IROFS" still appears in several places in the SHINE PSAR. Therefore, in RAI 3.5-6 (Reference 16), the staff asked that the applicant:

(1) Provide a performance-based definition for the fourth part (i.e., with respect to the credibility of an inadvertent criticality accident) of the six-part definition of safety-related SSCs or provide a discussion of why it is not necessary;

(2) Discuss how SHINE's definition of safety-related SSCs relates to the 10 CFR 21.3 definition of basic component (i.e., describe whether SHINE's defined safety-related SSCs can also be considered basic components under 10 CFR 21.3); and

(3) Remove references to IROFS from the SHINE PSAR if there are no longer SSCs that will bear this designation, or clarify how IROFS will be utilized as part of SHINE's ongoing safety basis.

In its response to RAI 3.5-6 (Reference 24), the applicant referred to the definition of safety-related SSCs that was provided in its response to RAI 3.5-1 regarding implementation of the requirements of 10 CFR 70.61(d). The applicant further stated that the fourth part of the definition of safety-related SSCs was updated to be performance-based and readily applicable to SSCs as follows:

4. That all nuclear processes are subcritical, including use of an approved margin of subcriticality;

The applicant also responded that it considers safety-related SSCs to be basic components, as defined in 10 CFR 21.3.

The applicant stated that the SSCs at the SHINE facility will not bear the classification of IROFS. PSAR Section 1.3.3, "Principal Design Criteria, Operating Characteristics, and Safety Systems," inadvertently retains references to IROFS and the acronyms and abbreviations list for PSAR Chapter 14, "Technical Specifications," inadvertently retains a definition for the IROFS acronym, which is not used elsewhere in the chapter. The applicant provided a revised PSAR to remove the inadvertent references to IROFS. However, PSAR Table 3.5b-1 will continue to refer to "items relied on for safety" in the context of a direct quotation from 10 CFR 70.64. The applicant stated that these items are referred to as safety-related SSCs.

The staff finds that the response addresses how the applicant will use the aforementioned definitions from 10 CFR 50.2, 10 CFR 70.4, and 10 CFR 21.3, and demonstrates adequate design criteria for a preliminary design. The staff will confirm that the final design conforms to this design basis during the evaluation of SHINE's FSAR.

In response to RAI 3.5-4, SHINE stated, in part, that the control room is part of a safety-related, Seismic Category I structure, but that the other SSCs are not defined as safety-related based on SHINE's definition of safety-related SSCs.

While SHINE's response to RAI 3.5-4 also states that safety-related systems are automatic and would put the facility in a safe condition without operator intervention, there is no discussion on how control room operators or other facility personnel will determine the facility is in a safe condition or how personnel will maintain the facility in a safe condition. Under the conditions of a postulated design-basis earthquake and a loss-of-offsite power (LOOP), the following conditions could exist which would inhibit facility personnel from determining that the facility is in a safe condition and maintaining the facility in a safe condition using necessary safety-related equipment:

- SHINE PSAR Tables 2.3-2 and 2.3-3 show that the outdoor temperature can vary between -37 degrees Fahrenheit (°F) and 104°F. While control room ventilation is supplied via FVZ4, which is non-safety-related, the control room has no heating, ventilation, and air conditioning (HVAC) system, which could impact control room habitability and equipment operability.

- The SHINE facility does not include emergency lighting, which could impact the ability of facility personnel to assess the facility status and to staff the control room.

- Since the stack release monitoring system is not defined as safety-related, its unavailability could impact the ability of facility personnel to determine that there are no releases going up the stack.

- Since the health physics monitors are not defined as safety-related, their unavailability could impact the ability of facility personnel to assess levels of contamination during egress from the facility.

- Since the facility data and communication system is not defined as safety-related, its unavailability could impact the ability of control room personnel to determine the facility status and communicate with other facility personnel and offsite agencies.

- In the event of an earthquake, there is the possibility for both onsite and offsite toxic releases and smoke from fire. Since the facility breathing air system is not defined as safety-related, its unavailability could impact the ability of facility personnel to determine the facility status.

The staff also noted that additional information was needed on the design of the SHINE control room and other SSCs for the NRC staff to determine the adequacy of the design for the prevention of accidents and the mitigation of the consequences of accidents.

Therefore, in RAI 3.5-7 (Reference 16), the staff asked that the applicant provide additional information describing how the design of the SHINE control room and other SSCs will allow control room operators or other facility personnel to determine the facility is in a safe condition or how personnel will maintain the facility in a safe condition in the event of a postulated design-basis earthquake with a loss-of-offsite power.

In its response to RAI 3.5-7 (Reference 25), the applicant discussed how the facility is designed to be maintained in a safe configuration through the use of safety-related equipment during normal operations and as required to prevent or mitigate the consequences of abnormal operational transients or design basis accidents.

The applicant stated that during the detailed design it will demonstrate that the control room will be within reasonable temperatures that will ensure safety-related equipment operability and that the control room operators can monitor plant conditions. The applicant will describe the method chosen to ensure the control room remains within a reasonable temperature range, and the reasonable temperature range will be defined in the FSAR.

The applicant stated that the control room will have access to information on the status of safety-related plant systems through the display and interface panels for the TSV reactivity protection system (TRPS) and radiological integrated control system (RICS), the engineered safety features actuation system (ESFAS) operator panel, the radiation monitor displays from the radiation area monitoring system (RAMS), the displays and alarms for the criticality accident alarm system (CAAS), and the neutron fluxes measured by the neutron flux detection system (NFDS) and relayed to the TRPS. These systems are safety-related and powered by the UPSS. These systems provide sufficient information to allow personnel in the control room to determine that the plant is in a safe condition and maintained in a safe condition.

The applicant described how the control room will have adequate lighting following a seismic event or loss of offsite power, which included 8 hours of battery backup power; charging capability by the standby diesel generator and normal electrical power supply system (NPSS); and, the availability of handheld lights. Additionally, the emergency lighting system (ELTG) was added to the systems list provided in PSAR Table 3.1-1.

The applicant stated that, in addition to the monitoring of the plant conditions through the control room instrumentation, personnel will be able to assess releases through the facility stack. The primary means of monitoring the facility stack will be with the stack release monitoring (SRM) system. This system will provide monitoring of noble gases, aerosols, iodine, and tritium effluents. Although non-safety-related, SHINE will add the SRM system to the loads powered by the UPSS, and therefore the SRM system will likely be available after a loss of offsite power. The nominal connected load and the nominal demand load for the SRM system will be determined during detailed design. SHINE will update the UPSS load list provided in PSAR Table 8a2.2-1, “UPSS Load List,” in the FSAR to include the SRM system.

The applicant stated that, as described in Section 7.2.3 of the SHINE Preliminary Emergency Plan, if the SRM system or health physics monitors become unavailable due to a design-basis earthquake or loss of offsite power, there will be other methods and equipment to perform the functions of those systems. These methods and equipment will be maintained by inventory and surveillances to ensure availability when required.

The applicant stated that the control room operators and other SHINE personnel will be able to communicate with each other and offsite agencies during a seismic event or loss of offsite power by having multiple independent communication subsystems available that use different technologies to ensure at least one method is available for onsite and offsite communication.

The applicant stated that, as described in PSAR Section 13b.3, "Analysis of Accidents with Hazardous Chemicals Produced from Licensed Material," potential chemical hazards from onsite chemicals associated with licensed materials have been evaluated, which included appropriate safety controls to prevent or mitigate the consequences to an acceptable level. Offsite chemical hazards have been evaluated in PSAR Section 2.2.3, "Analysis of Potential Accidents at Facilities," and in the applicant's response to RAI 2.2-3.

The applicant stated that fire areas in the SHINE IF and RPF are separated by three-hour rated fire barriers to prevent the spread of a fire throughout the facility. While one fire zone may become uninhabitable, the majority of the facility will not be affected. SHINE also has a diesel-driven fire pump, which is expected to be available following a loss of offsite power. The SHINE fire protection systems and programs are further described in PSAR Section 9a2.3, "Fire Protection Systems and Programs."

The applicant stated the design of the control room and other SSCs will ensure that SHINE personnel can assess the safe condition of the facility and ensure that it is maintained in a safe shutdown condition following a design-basis earthquake or loss of offsite power.

The staff finds the applicant's response addresses how it will meet the requirements in 10 CFR 50.34(a)(4) and demonstrates adequate design criteria for a preliminary design. The staff will confirm that the final design conforms to this design basis during the evaluation of SHINE's FSAR.

As required by 10 CFR 50.34(a)(4), an applicant needs to submit "[a] preliminary analysis and evaluation of the design and performance of structures, systems, and components of the facility with the objective of assessing the risk to public health and safety resulting from operation of the facility…, and the adequacy of structures, systems, and components provided for the prevention of accidents and the mitigation of the consequences of accidents."

SHINE PSAR, Table 3.5b-1 (pages 3-102 - 3-106) under the first column, "Baseline Design Criteria 10 CFR 70.64," lists the following criterion:

> (7) Utility services. The design must provide for continued operation of essential utility services.

Under the second table column, "As Applied to SHINE," the stated applicability is: "As Applied and Means of Compliance - The SHINE facility provides a standby diesel generator for asset protection of selected systems. Refer to SHINE PSAR, Section 8b for detailed information." The staff notes that while SHINE PSAR Table 3.5b-1 refers to PSAR Section 8b, PSAR Section 8b essentially refers to PSAR Section 8a.

However, this is classified as non-safety-related and does not have to function after a design-basis earthquake. In addition, SHINE PSAR Section 8a2.1.4, “SHINE Facility Loads Supported by SDG,” references Table 8a2.1-2, “Standby Diesel Generator Load List,” (Reference 36), but unlike PSAR Section 8a2.2.3, “SHINE Facility Systems Served by the Class 1E UPSS,” which provides a list of what systems are supported by the Class 1E UPSS, it does not provide a list of systems supported by the standby diesel generator system.

Therefore, in RAI 3.5b-1 (Reference 14), the staff asked that the applicant provide a list of systems supported by the SDG and provide clarification on how Criterion 7, “Utility services,” of 10 CFR 70.64 is met for the case of a postulated design-basis earthquake with a LOOP.

In its response to RAI 3.5b-1 (Reference 20), the applicant stated that the following systems are supported by the standby diesel generator:

- Tritium purification system
- RVZ1, facility instrument air system
- Facility instrument air system
- FVZ4, emergency lighting system
- Emergency lighting system
- UPSS
- Radioactive drain system (RDS)
- Facility fire detection and suppression

Additionally, the applicant stated that following are additional loads on the standby diesel generator that are not listed as systems in the PSAR:

- Security system
- Freeze protection
- Raw material storage area heaters
- Emergency Operating Center

The applicant stated that during a loss of normal alternating current (AC) power, Criterion 7 of 10 CFR 70.64 is met by the UPSS. The safety-related UPSS feeds two 120 volts – alternating current (VAC) UPSS Class 1E buses, which provide power to essential equipment and instrumentation. The systems served by the Class 1E UPSS are identified in PSAR Section 8a2.2.3. The UPSS is capable of delivering required emergency power for the required duration during normal and abnormal operation. The UPSS battery chargers associated with the UPSS Class 1E battery subsystem are connected to the bus fed by the standby diesel generator. The battery chargers provide the required isolation between the non-1E normal electrical power supply system and Class 1E 250 volts – direct current (VDC). The AC input breakers on both battery chargers and voltage regulating transformers are qualified as isolation devices using guidance from the IEEE 384, “IEEE Standard Criteria for Independence of Class 1E Equipment and Circuits.”

The staff finds that the response addresses how the applicant meets the requirements in 10 CFR 50.34(a)(4) and demonstrates adequate design criteria for a preliminary design. The staff will confirm that the final design conforms to this design basis during the evaluation of SHINE’s FSAR.

As required by 10 CFR 50.34(a)(4), an applicant needs to submit "[a] preliminary analysis and evaluation of the design and performance of structures, systems, and components of the facility with the objective of assessing the risk to public health and safety resulting from operation of the facility…, and the adequacy of structures, systems, and components provided for the prevention of accidents and the mitigation of the consequences of accidents."

In response to RAI 3.5b-1, SHINE provided the information on the systems supported by the SDG, and stated that Criterion 7 of 10 CFR 70.64 is met by the uninterruptible power supply chain. The staff needed additional information to evaluate the SDG's ability to meet Criterion 7 of 10 CFR 70.64 to determine the adequacy of SSCs provided for the prevention of accidents and the mitigation of the consequences of accidents.

Therefore, in RAI 3.5b-2 (Reference 16), the staff asked that the applicant provide additional information stating how the standby diesel generator meets Criterion 7 of 10 CFR 70.64, given that it and the systems it powers are classified as non-safety-related and how the uninterruptible power supply chain meets Criterion 7 of 10 CFR 70.64 during a loss of normal AC power.

In its response to RAI 3.5b-2 (Reference 24), the applicant stated that PSAR Table 3.5b-1 provides SHINE's general evaluation of the design bases of the RPF against the baseline design criteria specified under 10 CFR 70.64 and general design criteria (GDC) 61, "Fuel Storage and Handling and Radioactivity Control"; 62, "Prevention of Criticality in Fuel Storage and Handling"; 63, "Monitoring Fuel and Waste Storage"; and 64, "Monitoring Radioactivity Releases"; of Appendix A to 10 CFR Part 50, as a good design practice. Criterion 7 of the baseline design criteria specified under 10 CFR 70.64 states, "[t]he design must provide for continued operation of essential utility services." The applicant states that while the standby diesel generator provides an additional source of power should offsite power be lost, it is not safety-related and is not used to meet Criterion 7 of 10 CFR 70.64. The applicant stated that it plans to use the UPSS to power safety-related equipment should off-site power be lost and the SDG not be available. The UPSS provides continued operation of essential electrical utility service at the SHINE facility, and no other essential utilities are identified for the facility. The applicant revised the "As Applied and Means of Compliance" discussion provided for Criterion 7 in PSAR Table 3.5b-1 in the PSAR to be consistent with the discussion provided for Criterion 17, "Electric power systems," in PSAR Table 3.5a-1.

The staff finds that the response addresses how the applicant meets the requirements in 10 CFR 50.34(a)(4) and demonstrates adequate design criteria for a preliminary design. The staff will confirm that the final design conforms to this design basis during the evaluation of SHINE's FSAR.

On the basis of its review, the staff has determined that the level of detail provided on systems and components is adequate and supports the preliminary design and satisfies the applicable acceptance criteria of NUREG-1537, Part 2, Section 3.5. The staff concludes: (1) the design criteria included consideration of the conditions required of the SSCs to ensure safe facility operation, including response to transient and potential accident conditions analyzed in the PSAR; and (2) the design of the SSCs addressed the applicable baseline design criteria of 10 CFR 70.64.

Therefore, the staff finds that the facility design features to cope with seismic damage are sufficient and meet the applicable regulatory requirements and guidance for issuance of a construction permit in accordance with 10 CFR 50.35 and 50.40. Further technical or design information required to complete the safety analysis may reasonably be left for later

consideration. The staff will confirm that the final design conforms to this design basis during the evaluation of SHINE's FSAR.

3.5 Summary and Conclusions

The staff evaluated the descriptions and discussions of the SHINE facility's SSC design criteria, as described in Chapter 3 of the SHINE PSAR and supplemented by the applicant's responses to RAIs, and finds that the preliminary design criteria of SHINE's SSCs, including the principal design criteria; design bases; and information relative to materials of construction, general arrangement, and approximate dimensions: (1) provide reasonable assurance that the final design will conform to the design basis, and (2) meet applicable regulatory requirements and acceptance criteria in NUREG-1537 and the ISG augmenting NUREG-1537.

On the basis of these findings, the staff has made the following conclusions for the issuance of a construction permit in accordance with 10 CFR 50.35 and 50.40:

(1) SHINE has described the proposed design criteria of SSCs, including, but not limited to, the principal architectural and engineering criteria for the design, and has identified the major features or components incorporated therein for the protection of the health and safety of the public.

(2) Further technical or design information required to complete the safety analysis of the SHINE SSCs may reasonably be left for later consideration in the FSAR.

(3) There is reasonable assurance that, taking into consideration the site criteria contained in 10 CFR Part 100, the proposed facility can be constructed and operated at the proposed location without undue risk to the health and safety of the public.

(4) There is reasonable assurance: (i) that the construction of the SHINE facility will not endanger the health and safety of the public, and (ii) that construction activities can be conducted in compliance with the Commission's regulations.

(5) The issuance of a permit for the construction of the facility would not be inimical to the common defense and security or to the health and safety of the public.

4.0 IRRADIATION UNITS AND RADIOISOTOPE PRODUCTION FACILITY DESCRIPTION

The facility description addresses the principal features, operating characteristics, and parameters of the SHINE Medical Technologies, Inc. (SHINE or the applicant) irradiation units (IUs) (which constitute the irradiation facility [IF]) and radioisotope production facility (RPF). An IU is an accelerator-driven subcritical operating assembly used for the irradiation of an aqueous uranyl sulfate target solution, resulting in the production of molybdenum-99 (Mo-99) and other fission products. The primary function of the RPF is to extract, purify, package, and ship medical radioisotopes.

This chapter of the SHINE construction permit safety evaluation report (SER) describes the review and evaluation by the U.S. Nuclear Regulatory Commission (NRC) staff (the staff) of the preliminary design of the SHINE IUs and RPF as presented in Chapter 4, "Irradiation Unit and Radioisotope Production Facility Description," of the SHINE Preliminary Safety Analysis Report (PSAR), as supplemented by the applicant's response to the staff's requests for additional information (RAIs).

4a Irradiation Unit

SER Section 4a, "Irradiation Unit," provides an evaluation of the preliminary design of SHINE's IU as presented in SHINE PSAR Section 4a2, "Irradiation Facility Description."

4a.1 Areas of Review

The staff reviewed SHINE PSAR Section 4a2 against applicable regulatory requirements using regulatory guidance and standards to assess the sufficiency of the preliminary design and performance of the SHINE IU systems. As part of this review, the staff evaluated descriptions and discussions of the SHINE IF with special attention to design and operating characteristics, unusual or novel design features, and principal safety considerations. The preliminary design of the SHINE IU was evaluated to ensure the sufficiency of principal design criteria; design bases; and information relative to materials of construction, general arrangement, and approximate dimensions, sufficient to provide reasonable assurance that the final design will conform to the design basis. In addition, the staff reviewed SHINE's identification and justification for the selection of those variables, conditions, or other items, which are determined to be probable subjects of technical specifications for the facility, with special attention given to those items which may significantly influence the final design.

Areas of review for this section included the subcritical assemblies, neutron drivers, target solution vessel (TSV) and light water pool, biological shield, nuclear design, thermal-hydraulic design, and gas management system. Within these review areas, the staff assessed the preliminary analysis of the target solution, reactivity control mechanisms, neutron moderator and reflector, subcritical multiplication source, subcritical assembly support structure (SASS), neutron multiplier, high voltage power supply (HVPS) accelerator, control systems, accelerator and differential pumping system, target chamber, normal operating conditions, reactor core physics parameter, operating limits, design bases, and heat removal systems.

4a.2 Summary of Application

The SHINE facility includes eight IUs and their supporting systems, which the IF comprises. Section 4a2 of the SHINE PSAR describes one of the eight IUs. The summary provided below applies to all eight IUs.

An IU is an accelerator-driven subcritical operating assembly used for the irradiation of an aqueous uranyl sulfate target solution, resulting in the production of Mo-99 and other fission products. An accelerator is used to create deuterium-tritium fusion reactions, resulting in the formation of high-energy neutrons, which cause various multiplying reactions in the neutron multiplier, which then increase the neutron population entering the TSV. The neutron population in the TSV leads to fissioning of the uranium solution.

Each IU consists of a subcritical assembly (SCAS), neutron driver, TSV and light water pool, biological shield, and gas management system. The primary fission-product barriers of the IUs are the TSV, TSV off-gas management system (TOGS), and TSV dump tank.

SHINE PSAR Section 4a2 provides the preliminary design of the SHINE IU systems, including physical descriptions, design bases, process functions and operation, safety functions, interfaces, and probable subjects of technical specifications.

SHINE PSAR Section 4b, “Radioisotope Production Facility Description,” contains a summary description of the RPF. It describes the design of the RPF and the processes employed within it, and includes the principal safety considerations that were factored into the RPF design, construction, and operation. It also describes the RPF biological shield, the radioisotope extraction system, and the special nuclear material (SNM) processing and storage.

4a.3 Regulatory Basis and Acceptance Criteria

The staff reviewed SHINE PSAR Chapter 4 against applicable regulatory requirements, guidance, and standards, to assess the sufficiency of the preliminary design and performance of the SHINE IF and RPF for the issuance of a construction permit. In accordance with paragraph (a) of Title 10 of the *Code of Federal Regulations* (10 CFR) 50.35, “Issuance of construction permits,” a construction permit authorizing SHINE to proceed with construction may be issued once the following findings have been made:

(1) SHINE has described the proposed design of the facility, including, but not limited to, the principal architectural and engineering criteria for the design, and has identified the major features or components incorporated therein for the protection of the health and safety of the public.

(2) Such further technical or design information as may be required to complete the safety analysis, and which can reasonably be left for later consideration, will be supplied in the final safety analysis report (FSAR).

(3) Safety features or components, if any, which require research and development have been described by SHINE and a research and development program will be conducted that is reasonably designed to resolve any safety questions associated with such features or components.

(4) On the basis of the foregoing, there is reasonable assurance that: (i) such safety questions will be satisfactorily resolved at or before the latest date stated in the application for completion of construction of the proposed facility, and (ii) taking into consideration the site criteria contained in 10 CFR Part 100, "Reactor Site Criteria," the proposed facility can be constructed and operated at the proposed location without undue risk to the health and safety of the public.

With respect to the last of these findings, the staff notes that the requirements of 10 CFR Part 100 are specific to nuclear power reactors, and therefore not applicable to the SHINE facility. However, the staff evaluated SHINE's site specific conditions using site criteria similar to 10 CFR Part 100, by using the guidance in NUREG-1537, Part 1, "Guidelines for Preparing and Reviewing Applications for the Licensing of Non-Power Reactors, Format and Content," issued February 1996 (Reference 4) and Part 2, "Guidelines for Preparing and Reviewing Applications for the Licensing of Non-Power Reactors, Standard Review Plan and Acceptance Criteria," issued February 1996 (Reference 5). The staff's review evaluated the geography and demography of the site; nearby industrial, transportation, and military facilities; site meteorology; site hydrology; and site geology, seismology, and geotechnical engineering to ensure that issuance of the construction permit will not be inimical to public health and safety.

The staff's evaluation of the preliminary design of the SHINE IF and RPF does not constitute approval of the safety of any design feature or specification. Such approval will be made following the evaluation of the final design of the SHINE IF as described in the FSAR as part of the SHINE operating license application.

4a.3.1 Applicable Regulatory Requirements

The applicable regulatory requirements for the evaluation of SHINE's proposed IF and RPF are as follows:

- 10 CFR 50.23, "Construction permits."
- 10 CFR 50.34, "Contents of applications; technical information," paragraph (a), "Preliminary safety analysis report."
- 10 CFR 50.35, "Issuance of construction permits."
- 10 CFR 50.40, "Common standards."
- 10 CFR 50.45, "Standards for construction permits, operating licenses, and combined licenses."
- 10 CFR 70.61, "Performance Requirements."

4a.3.2 Regulatory Guidance and Acceptance Criteria

In applying guidance and acceptance criteria, the staff used its judgment as to which acceptance criteria were relevant to SHINE's proposed facility, as much of this guidance was originally developed for nuclear reactors. Given the similarities in SHINE's proposed facility and non-power research reactors, the staff used established guidance documents and the

Commission's regulations to determine the acceptance criteria for demonstrating compliance with 10 CFR regulatory requirements. For example, the staff used:

- NUREG-1537, Part 1, "Guidelines for Preparing and Reviewing Applications for the Licensing of Non-Power Reactors, Format and Content," issued February 1996 (Reference 4).

- NUREG-1537, Part 2, "Guidelines for Preparing and Reviewing Applications for the Licensing of Non-Power Reactors, Standard Review Plan and Acceptance Criteria," issued February 1996 (Reference 5).

- "Final Interim Staff Guidance [ISG] Augmenting NUREG-1537, Part 1, 'Guidelines for Preparing and Reviewing Applications for the Licensing of Non-Power Reactors: Format and Content,' for Licensing Radioisotope Production Facilities and Aqueous Homogeneous Reactors," dated October 17, 2012 (Reference 6).

- "Final Interim Staff Guidance Augmenting NUREG-1537, Part 2, 'Guidelines for Preparing and Reviewing Applications for the Licensing of Non-Power Reactors: Standard Review Plan and Acceptance Criteria,' for Licensing Radioisotope Production Facilities and Aqueous Homogeneous Reactors," dated October 17, 2012 (Reference 7).

As stated in the ISG Augmenting NUREG-1537, the staff determined that certain guidance originally developed for heterogeneous non-power research and test reactors is applicable to aqueous homogenous facilities and production facilities. SHINE used this guidance to inform the design of its facility and prepare its PSAR. The staff's use of reactor-based guidance in its evaluation of the SHINE PSAR is consistent with the ISG Augmenting NUREG-1537.

As appropriate, additional guidance (e.g., NRC regulatory guides, Institute of Electrical and Electronics Engineers (IEEE) standards, American National Standards Institute/American Nuclear Society (ANSI/ANS) standards) has been used in the staff's review of SHINE's PSAR. The use of additional guidance is based on the technical judgment of the reviewer, as well as references in NUREG-1537, Parts 1 and 2; the ISG Augmenting NUREG-1537, Parts 1 and 2; and the SHINE PSAR. Additional guidance documents used to evaluate SHINE's PSAR are provided as references in Appendix B of this SER.

4a.4 Review Procedures, Technical Evaluation, and Evaluation Findings

The staff performed an evaluation of the technical information presented in SHINE PSAR Section 4a2, as supplemented by the applicant's responses to RAIs, to assess the sufficiency of the preliminary design and performance of SHINE's IU for the issuance of a construction permit, in accordance with 10 CFR 50.35(a). The sufficiency of the preliminary design and performance of the SHINE IU is determined by ensuring the design and performance meet applicable regulatory requirements, guidance, and acceptance criteria, as discussed in Section 4a.3, "Regulatory Basis and Acceptance Criteria," of this SER. A summary of the technical evaluation is described in SER Section 4a.5, "Summary and Conclusion."

For the purposes of issuing a construction permit, the preliminary design of the SHINE IU may be adequately described at a functional or conceptual level. The staff evaluated the sufficiency of the preliminary design of the SHINE IU based on the applicant's design methodology and ability to provide reasonable assurance that the final design will conform to the design bases

with adequate margin for safety. As such, the staff's evaluation of the preliminary design of the SHINE IU does not constitute approval of the safety of any design feature or specification. Such approval will be made following the evaluation of the final design of the SHINE IU, as described in the FSAR, as part of SHINE's operating license application.

4a.4.1 Summary Description

The staff evaluated the sufficiency of the summary description of the IU, as described in SHINE PSAR Section 4a2.1, "Summary Description," using the guidance and acceptance criteria from Section 4a2.1, "Summary Description," of the ISG Augmenting NUREG-1537, Parts 1 and 2.

Section 4a2.1 of the ISG Augmenting NUREG-1537, Part 2, states that the summary description should contain a general overview of the design and important characteristics of operation.

Based on the information provided in Section 4a2.1 of the SHINE PSAR, the staff finds that the summary description of the SHINE IU meets the acceptance criteria of the ISG Augmenting NUREG-1537 for the issuance of a construction permit in accordance with 10 CFR 50.35 and meets the standards in 10 CFR 50.40.

4a.4.2 Subcritical Assembly

The primary components that make up the SCAS are the TSV and the neutron multiplier, which are both supported and positioned by the SASS. The SCAS is submerged in a light water pool and located directly beneath the neutron driver assembly (NDAS). The SCAS and the NDAS are the primary components of the IU. The SCAS, light water pool, and NDAS are further described in SHINE PSAR Sections 4a2.2.5, "Reactor Internals Support Structures"; 4a2.4.2, "Light Water Pool"; and 4a2.3, "Neutron Driver"; respectively.

4a.4.3 Target Solution

The staff evaluated the sufficiency of target solution, as described in SHINE PSAR Section 4a2.2.1, "Target Solution," using the guidance and acceptance criteria from Section 4a2.2.1, "Reactor Fuel," of the ISG Augmenting NUREG-1537, Parts 1 and 2. The staff notes that, while the target solution is not considered reactor fuel, the target solution is similar in nature and behavior to the liquid fuel loading of an aqueous homogeneous reactor (AHR) and, therefore, the guidance in the ISG Augmenting NUREG-1537 can be applied.

Consistent with the review procedures of Section 4a2.2.1 of the ISG Augmenting NUREG-1537, Part 2, the staff considered whether the information provided adequately described required characteristics of the target solution.

As stated in SHINE PSAR Section 4a2.2.1, the target solution is a uranyl sulfate solution with an enrichment of 19.75 percent ± 0.2 percent. Uranium concentration is preliminary and subject to change until completion of the detailed design. Fuel solution of this composition has been analyzed in a number of different research programs, cited in SHINE PSAR Section 4a2.2.1.13, "Target Solution History." Based on these analyses, the chemical and physical characteristics of fuel constituents should be compatible with one another. Each irradiation cycle is 5.5 days, with some makeup solution expected to be added between cycles to counter process losses. Target solution processing is further described in SHINE PSAR Section 4b2.4.1, "Methodology."

The primary system boundary (PSB) components were designed to be compatible with the target solution to avoid corrosion and other unwanted metallurgical effects that could compromise the PSB integrity.

Mixing in the TSV takes place by natural convection. The highest heat generation will occur near the center of the solution, and the surfaces adjacent to cooling flow will be the coolest. Thus, there will be an upward flow through the center of the TSV and a downward flow near the cooled surfaces. Detailed analyses of heat generation and cooling flow will be provided in the FSAR.

Non-uniformities, such as non-uniform void distribution, non-uniform temperatures, and non-uniform power distribution, are not expected to impact operational limits.

Off-gas formation is handled by the TOGS, as described in SHINE PSAR Section 4a2.8, “Gas Management System.” Preliminary calculations indicate that plutonium and poison buildup, along with changes in pH, will not be significant. The solution will also be processed through the molybdenum extraction and purification system (MEPS) after each irradiation cycle, and through the uranyl nitrate conversion system (UNCS) and the uranium extraction (UREX) system after a specified number of irradiation cycles. This processing sequence does not result in any long-term chemical or physical consequences to the target solution according to research conducted at Argonne National Laboratory (ANL) (ANL 2012).

The ISG Augmenting NUREG-1537, Part 2, Section 4a2.2.1, “Reactor Fuel,” “Acceptance Criteria,” states, in part, that the PSAR should include a description of the “various phenomena that result in changes to the initial fuel composition…including potential fuel and fission product precipitation….”

SHINE PSAR Section 4a2.2.1.6, “TSV Operating Conditions,” states that there is no precipitation out of the target solution; however, International Atomic Energy Agency (IAEA) TECDOC-1601, “Homogeneous Aqueous Solution Nuclear Reactors for the Production of Mo-99 [Molybdenum-99] and Other Short Lived Radioisotopes,” states that as the fuel solution ages, fission products can approach solubility limits.

Therefore, in RAI 4a2.2-5 (Reference 14), because fuel solution concerns are similar to those for SHINE’s target solution, the staff asked the applicant to provide information on how close the SHINE target solution will be to the solubility limits and to provide additional information discussing whether SHINE plans to use catalytic agents to mitigate precipitation, as discussed in SHINE PSAR Section 4a2.4.1.1, “Design Considerations.”

In response to RAI 4a2.2-5 (Reference 21), the applicant stated that, as specified in Table 4a2.2-1, “Target Solution Chemical and Physical Properties,” of the PSAR, a catalytic agent will be used in the target solution but there are no plans to use catalytic agents to mitigate fission product precipitation because the small amount of potential precipitation is expected to have an insignificant effect on reactivity in the TSV. The applicant also stated that Table 4a2.2-1 of the PSAR will be updated with potential fission products precipitate levels and that the details of the system design to remove the precipitates from the target solution during processing (e.g., filter with differential pressure monitoring) will be provided in the FSAR.

The staff finds this response satisfies the acceptance criteria of ISG Augmenting NUREG-1537, Section 4a2.2.1, and demonstrates adequate design criteria for a preliminary design. The staff will confirm that the final design conforms to this design basis during the evaluation of SHINE's FSAR.

The ISG Augmenting NUREG-1537, Part 2, Section 4a2.2.1 "Acceptance Criteria," states, in part that the PSAR should include information on fuel operating parameters, taking into consideration "characteristics that could limit fuel barrier integrity." This should include temperature ranges during startup and normal operation. In RAI 4a2.2-6 (Reference 14), the staff asked the applicant to provide the normal temperature range for startup and approach to criticality.

In response to RAI 4a2.2-6 (Reference 20), the applicant responded that during startup and approach to criticality, the TSV is expected to be at approximately the same temperature as the primary closed loop cooling system (PCLS), nominally 68 degrees Fahrenheit (°F), due to the small amount of decay heat generation in the target solution and the negligible fission power generated during startup.

The staff finds this response satisfies the acceptance criteria of ISG Augmenting NUREG-1537, Section 4a2.2.1 and demonstrates adequate design criteria for a preliminary design. The staff will confirm that the final design conforms to this design basis during the evaluation of SHINE's FSAR.

The ISG Augmenting NUREG-1537, Part 2, Section 4a2.2.1 states, in part, that the PSAR should include information on fuel operating parameters, taking into consideration "characteristics that could limit fuel barrier integrity." This should include irradiation times and burnup. In RAI 4a2.2-7 (Reference 14), the staff asked the applicant to provide the duration of the "short irradiation cycle" mentioned in SHINE PSAR Section 4a2.2.1.9, "Chemical and Physical Changes in Target Solution," and the maximum expected burnup.

In response to RAI 4a2.2-7 (Reference 20), the applicant stated that an individual irradiation cycle is approximately 5.5 days, and the maximum expected target solution burnup is 0.55 percent of the initial heavy atoms (mainly uranium-235 [U-235] and uranium-238 [U-238]), which would occur after approximately 5 years of operation at maximum power with no target solution makeup.

The staff finds this response satisfies the acceptance criteria of ISG Augmenting NUREG-1537, Section 4a2.2.1 and demonstrates adequate design criteria for a preliminary design. The staff will confirm that the final design conforms to this design basis during the evaluation of SHINE's FSAR.

The ISG Augmenting NUREG-1537, Part 2, Section 4a2.2.1 "Acceptance Criteria," states, in part, that "maintaining fuel barrier integrity should be the most important design objective." SHINE PSAR Section 4a2.2.1.10, "TSV Physical Structure," mentions a "credible deflagration." A strong deflagration or detonation could compromise the integrity of the primary system boundary. In RAI 4a2.2-8 (Reference 14), the staff asked that the applicant provide the pressure expected during a "credible deflagration," and discuss how this value was determined, as well as how it compares to the maximum pressure that each component of the primary system boundary can withstand.

In response to RAI 4a2.2-8 (Reference 21), the applicant stated, in part, that "preliminary calculations indicate that the maximum pressure during a credible deflagration is less than 50 pounds per square inch gauge (psig) and the maximum pressure during a credible deflagration was determined by investigating possible modes of failure of the TOGS…the calculated peak hydrogen concentration will be below the detonation limit. The deflagration pressure was calculated using an adiabatic flame temperature approach, adjusted for constant volume conditions, at the point of peak hydrogen concentration." The applicant committed to ensure that the design pressure of each component of the PSB will be greater than the credible deflagration pressure determined in the final calculations, which will be performed during detailed design.

The staff finds this response satisfies the acceptance criteria of ISG Augmenting NUREG-1537, Section 4a2.2.1 and demonstrates adequate design criteria for a preliminary design. The staff will confirm that the final design conforms to this design basis during the evaluation of SHINE's FSAR.

The ISG Augmenting NUREG-1537, Part 2, Section 4a2.2.1 "Acceptance Criteria," states, in part, that the application should provide a summary of the "fuel development, qualification, and production program." This should include discussions on fuel characterization, provide information on radiolytic gas production, changes in pH, gas removal, and addition of fuel and acid to the vessel along with implications on reactivity.

SHINE PSAR Section 4a2.2.1.13 briefly describes some of the history of uranyl sulfate development, but does not describe SHINE's Target Solution Qualification Program. In RAI 4a2.2-9 (Reference 14), the staff asked that the applicant provide a description of SHINE's Target Solution Qualification Program, including specific historical target solution data and their origin (references) that have been used for validation and safety calculations presented in the current SHINE PSAR and to include tests, experiments, and analyses that will be (or have been) performed to validate the historical data.

In response to RAI 4a2.2-9, (Reference 21), the applicant provided the SHINE Target Solution Qualification Program which contains historical target solution data, the means to produce the target solution, an overview of the processes to which the target solution is exposed, limits to ensure safe and reliable target solution performance, and the tests and experiments that will be and have been performed to validate the target solution characteristics.

The staff finds this response satisfies the acceptance criteria of ISG Augmenting NUREG-1537, Section 4a2.2.1 and demonstrates adequate design criteria for a preliminary design. The staff will confirm that the final design conforms to this design basis during the evaluation of SHINE's FSAR.

On the basis of its review, the staff has determined that the level of detail provided on the target solution is adequate and supports the preliminary design and satisfied the applicable acceptance criteria of NUREG-1537, Part 2, Section 4a2.2.1, allowing the staff to make the following relevant findings: (1) the target solution has been described in detail, including design limits and bases; (2) the constituents, materials, components, and preparation specifications have been appropriately described; (3) the target solution development history has been appropriately referenced and described; (4) the information provided on the target solution provides reasonable assurance that the fuel can function safely in the TSV without adversely affecting the health and safety of the public.

Therefore, the staff finds that the information provided on the target solution is sufficient and meets the applicable regulatory requirements and guidance for issuance of a construction permit in accordance with 10 CFR 50.35.

4a.4.4 Reactivity Control Mechanisms

The staff evaluated the sufficiency of reactivity control mechanisms, as described in SHINE PSAR Section 4a2.2.2, “Reactivity Control Mechanisms,” using the guidance and acceptance criteria from Section 4a2.2.2, “Control Rods,” of the ISG Augmenting NUREG-1537, Parts 1 and 2. The staff notes that, while the applicant does not propose to use control rods, the basis and underlying principles of the guidance in ISG Augmenting NUREG-1537 can still be applied to the proposed reactivity control mechanisms.

Consistent with the review procedures of Section 4a2.2.2 of the ISG Augmenting NUREG-1537, Part 2, the staff considered whether the design bases provided adequately define all essential characteristics needed for reactivity control.

According to SHINE PSAR Section 4a2.2.2, the IU is not intended to achieve criticality during normal operation, so no control rods are included in the SHINE design. Reactivity is determined by seven variables: uranium concentration in the target solution, uranium enrichment, TSV fill-volume, target solution temperature, target solution pressure, temperature of the light water pool, and temperature of the PCLS. During operation, the last four can be manipulated to control reactivity, while the others are generally not altered. The systems used to control system reactivity are described in detail in SHINE PSAR Section 7a2.4, “TSV Reactivity Protection System,” and Chapter 7, “Instrument and Control Systems,” of this SER, has an in-depth evaluation of SHINE’s IU reactivity control systems and engineered safety features actuation system.

When an abnormal condition arises that requires the IU to be shut down (e.g., loss of power, high flux, high hydrogen concentration), the control system of the neutron driver assembly will shut down the accelerator and terminate the reaction, as discussed in SHINE PSAR Section 4a2.3. The target solution can also be drained into criticality-safe dump tanks, as discussed in SHINE PSAR Section 4a2.4.1, “Target Solution Vessel.”

On the basis of its review, the staff has determined that the level of detail provided on the reactivity control mechanisms is adequate and supports the preliminary design and satisfied the applicable acceptance criteria of NUREG-1537, Part 2, Section 4a2.2.2, allowing the staff to make the following relevant findings: (1) the control and safety systems have been sufficiently described and design bases discussed; (2) function and safety-related design bases can be achieved by the control and safety system designs; (3) the design descriptions of components and materials offer reasonable assurance that these can control and shut down the IU safely from any operating condition; and (4) the criticality-safe design of the TSV dump tank should ensure an acceptable shutdown reactivity and margin.

Therefore, the staff finds that the information provided on the reactivity control mechanisms is sufficient and meets the applicable regulatory requirements and guidance for issuance of a construction permit in accordance with 10 CFR 50.35 and 50.40.

4a.4.5 Solid Neutron Moderator and Reflector

The staff evaluated the sufficiency of solid neutron moderators and reflectors, as described in SHINE PSAR Section 4a2.2.3, “Neutron Moderator and Reflector,” using the guidance and acceptance criteria from Section 4a2.2.3, “Solid Neutron Moderator and Reflector,” of the ISG Augmenting NUREG-1537, Parts 1 and 2.

Consistent with the review procedures of Section 4a2.2.3 of the ISG Augmenting NUREG-1537, Part 2, the staff considered whether the information on the solid neutron moderators and reflectors adequately define all essential characteristics and discuss the required systems.

SHINE PSAR Section 4a2.2.3 states the neutron multiplier is an aluminum-clad annulus of material that serves to improve the neutron population in the TSV. The design features of the multiplier are described in SHINE PSAR Section 4a2.2.6, “Neutron Multiplier.” A review of the neutron multiplier can be found later in Section 4a.4.8 of this SER. SHINE PSAR Section 4a2.2.3 also states no additional solid neutron moderators or reflectors are included in the design.

The applicant also states that the light water pool, which surrounds the TSV, provides liquid neutron moderation and reflection, as described in SHINE PSAR Section 4a2.4, “Target Solution Vessel and Light Water Pool.” A review of the light water pool can be found later in Section 4a.4.10, “Target Solution Vessel and Light Water Pool.”

The staff notes that the applicant provided information on design features that, based on their function or form, are not solid neutron moderators or reflectors (e.g., graphite) as described in the guidance.

The staff has considered the information provided in the PSAR and verified that no solid moderators or reflectors are included in the design. Therefore, the staff finds that the information provided on neutron moderators and reflectors is sufficient for issuance of a construction permit in accordance with 10 CFR 50.35.

4a.4.6 Subcritical Multiplication Source

The staff evaluated the sufficiency of the subcritical multiplication source, as described in SHINE PSAR Section 4a2.2.4, “Subcritical Multiplication Source,” using the guidance and acceptance criteria from Section 4a2.2.4, “Neutron Startup Source,” of the ISG Augmenting NUREG-1537, Parts 1 and 2.

Consistent with the review procedures of Section 4a2.2.4 of the ISG Augmenting NUREG-1537, Part 2, the staff considered whether the information on the subcritical multiplication source adequately defines all components and functions.

SHINE PSAR Section 4a2.2.4 describes the subcritical multiplication source as a fixed neutron source that is used to monitor reactivity when the neutron driver is not operating. Its output is several orders of magnitude less than the neutron driver and is more suitable for performing measurements and inverse subcritical multiplication factor (1/M) plots during startup. This allows for accurate and reliable measurement of changes in neutron population while filling the TSV with target solution.

Specif ic details of the subcritical multiplication source will be provided in the applicant's FSAR. The staff will confirm that the final design conforms to this design basis during the evaluation of SHINE's FSAR.

While the details of the SHINE subcritical multiplication source is not needed to issue a construction permit, the staff finds that the applicant's identification in the PSAR of requiring a neutron source for the final design is appropriate.

Therefore, the staff finds that the information provided on the subcritical multiplication source is sufficient and meets the applicable regulatory requirements and guidance for issuance of a construction permit in accordance with 10 CFR 50.35.

4a.4.7 Subcritical Assembly Support Structures

The staff evaluated the sufficiency of the SASS, as described in SHINE PSAR Section 4a2.2.5, "Subcritical Assembly Support Structure," using the guidance and acceptance criteria from Section 4a2.2.5, "Reactor Internals Support Structures," of the ISG Augmenting NUREG-1537, Parts 1 and 2.

Consistent with the review procedures of Section 4a2.2.5 of the ISG Augmenting NUREG-1537, Part 2, the staff considered whether the information adequately defines a complete support system.

SHINE PSAR Section 4a2.2.5 states the SASS maintains the location and shape of the aqueous target solution during irradiation. It contains the TSV and supports the TSV dump lines, TSV overflow lines, TOGS piping, and associated instrumentation. The SASS also functions to force coolant through the cooling paths and acts as an additional fission product barrier in the event of a TSV failure. The SASS is designed to conservatively hold the weight of all design basis loads, including thermal, seismic, and hydrodynamic loads imposed by the light water pool during a seismic event. It is also designed to withstand all thermal and hydraulic forces imposed by the coolant loop and target solution. The SASS is operated at pressures near atmospheric (a slight pressure differential is required across the SASS to provide cooling water flow). The SASS is designed for an internal pressure of 100 pounds per square inch (psi) to accommodate forces resulting from a hydrogen deflagration event followed by a failure of the TSV integrity. The materials used to construct the SASS are chosen due to their compatibility with the chemical environment and demonstrated performance under a neutron flux.

On the basis of its review, the staff has determined that the level of detail provided on the SASS is adequate and supports the preliminary design and satisfied the applicable acceptance criteria of NUREG-1537, Part 2, Section 4a2.2.5, allowing the staff to make the following relevant findings: (1) the support structure design should hold the weight of all core-related components; (2) the support structure design should withstand external forces and effects; and, (3) the support structure design should not cause malfunctions or interfere with safe operation or shutdown. The staff will confirm that the final design conforms to this design basis during the evaluation of SHINE's FSAR.

Therefore, the staff finds that the information provided on the SASS is sufficient and meets the applicable regulatory requirements and guidance for issuance of a construction permit in accordance with 10 CFR 50.35.

4a.4.8 Neutron Multiplier

The staff evaluated the sufficiency of the neutron multiplier, as described in SHINE PSAR Section 4a2.2.6, “Neutron Multiplier.” While the ISG Augmenting NUREG-1537 does not have a section dedicated to the neutron multiplier, which is unique to SHINE, the staff assessed whether SHINE provided information that satisfies the requirements of 10 CFR 50.34(a)(4).

SHINE PSAR Section 4a2.2.6 states the neutron multiplier is located in the space between the neutron driver tritium target chamber and the TSV. It is an annulus of aluminum-clad material that moderates and multiplies the fast neutrons from the fusion reactions initiated by the neutron driver. Heat deposited in the multiplier is removed by the light water pool system (LWPS). The temperature profiles through the multiplier will be determined during detailed design, with appropriate design features included to address any thermal expansion and contraction expected to occur. Its design lifetime is 30 years, but can be removed and replaced if damaged. The construction materials for the proposed design are compatible with the chemical and radiation environment. SHINE PSAR Section 4a2.2.6 states that in the event of a cladding failure, there are no consequences that would affect the safe operation and shutdown of the irradiation system and that a breach of the aluminum cladding will be detected by sampling of the LWPS. Contaminated water can be sent for processing via the UNCS.

The applicant states that the FSAR will contain a more comprehensive description of the manufacturing techniques and final dimensions for the neutron multiplier. The staff will confirm that the final design conforms to this design basis during the evaluation of SHINE’s FSAR.

While the details of the SHINE neutron driver is not needed to issue a construction permit, the staff finds that the applicant’s discussion on the neutron driver is appropriate and provides a sufficient level of detail for a PSAR.

Therefore, the staff finds that the information provided on the neutron multiplier is sufficient and meets the applicable regulatory requirements for issuance of a construction permit in accordance with 10 CFR 50.35.

4a.4.9 Neutron Driver

The staff evaluated the sufficiency of the NDAS, as described in SHINE PSAR Section 4a2.3. While the ISG Augmenting NUREG-1537 does not have a section dedicated to the neutron multiplier, which is unique to SHINE, the staff assessed whether SHINE provided information that satisfies the requirements of 10 CFR 50.34(a)(4).

SHINE PSAR Section 4a2.3 states the NDAS is an accelerator-driven system that produces 14 million electron volts (MeV) neutrons via deuterium-tritium fusion reactions. The NDAS is the source of neutrons used to generate the neutron fluxes required to create medical radioisotopes in the TSV, which holds the target solution. These high-energy neutrons enter the target solution initiating the resulting subcritical fission reactions. The NDAS is situated above the SCAS and mounted to an operating platform attached to the cell wall. The NDAS consists of the neutron driver, HVPS, and a control cabinet.

While the ISG Augmenting NUREG-1537 does not have a section on NDAS, which is unique to SHINE, the staff assessed that in alignment with 10 CFR 50.34(a)(4), which requires a “preliminary analysis and evaluation of the design and performance of structures, systems, and components of the facility with the objective of assessing the risk to public health and safety

resulting from operation of the facility…, and the adequacy of structures, systems, and components provided for the prevention of accidents and the mitigation of the consequences of accidents." Consistent with 10 CFR 50.34(a)(4), the PSAR should include information regarding corrosion control, susceptibility to radiation damage, and the physical description, including materials and physical dimensions.

Therefore, in RAI 4a2.3-1 (Reference 14), the staff asked that the applicant provide the physical characteristics of the NDAS (e.g., construction materials, dimensions), provide the expected activity of the NDAS due to activation of its components at the end of one irradiation cycle and at the end of its expected life, and describe what radiation damage concerns there are for affected materials and components.

In response to RAI 4a2.3-1 (Reference 20), the applicant provided a preliminary design with the description of the materials and dimensions of the NDAS. In addition, the applicant stated that the materials or components of the NDAS do not have radiation damage concerns. Materials known to have unacceptably low radiation damage thresholds, such as Teflon, will not be used in the NDAS which will be made from materials suitable for the expected neutron fluence levels. The applicant also stated that the operational lifetime of the NDAS is expected to impact the neutron activation of its components at disposal. Approximately 90 percent of the activity resulting from activation will be located beneath the pool surface. It is expected that most NDAS components will not experience significant radiation damage. Complex electronic components will be located outside the IU.

The staff finds this response provided sufficient information to meet the requirements in 10 CFR 50.34(a)(4) and demonstrates adequate design criteria for a preliminary design. The staff will confirm that the final design conforms to this design basis during the evaluation of SHINE's FSAR.

SHINE PSAR Section 4a2.3.3, "Ion Source," states the 300-kilovolt (kV) HVPS provides voltage to the accelerator. The HVPS is controlled via the NDAS control system, as described in SHINE PSAR Section 4a2.3.2, "Control System," and shuts down on an overvoltage greater than 320 kV (this is a protective feature and not a safety limit or function). The NDAS control system provides the means to energize, monitor, and change NDAS components.

SHINE PSAR Sections 4a2.3.3, "Ion Source," 4a2.3.4, "Accelerator," 4a2.3.5, "Focus Element," 4a2.3.6, "Differential Pumping," and 4a2.3.7, "Target Chamber," depicts the ion source, accelerator, focus element, target chamber, and the three differential pumping stages in the NDAS. A schematic is also provided in SHINE PSAR Figure 4a2.3-3, "Schematic of the Differential Pumping System as Built at PNL." Deuterium ions are fed via an ion extractor from the ion source to the accelerator. The HVPS powers the 300-kV accelerator, which accelerates the ions towards the focus element. The differential pumping stages maintain the pressure differential between the accelerator and the target chamber. The target chamber is maintained at low pressure and is where the bulk of the deuterium-tritium interactions that drive the subcritical reaction occur.

Due to the high voltage involved with the accelerator, there is potential for electromagnetic interference. To mitigate this, NDAS components that are exposed to potential electromagnetic interference from the accelerator are shielded or otherwise electrically isolated. Other components near the accelerator will be similarly shielded. The beam of accelerated ions will diverge in the absence of the focusing element. Any failure of the focus element will result in a drop in neutron yield. The target chamber is maintained at low pressure and filled with tritium

gas. Neutron yield is typically determined by the purity of the tritium in the chamber, which is controlled via the tritium purification system. The ion beam is fully stopped in the chamber during normal operation, so any increase in pressure will not change the yield and a sufficient decrease in pressure will decrease the yield. The target chamber is surrounded by the SCAS and is therefore subject to high neutron flux. The construction materials were chosen to mitigate the effects of corrosion and neutron damage.

SHINE PSAR Section 4a2.3.8, “Process Control Requirements,” states that the TSV process control system (TPCS) and TSV reactivity protection system (TRPS) interface with the NDAS control system and will trigger the shutdown of the HVPS via safety-related trip circuitry in the event of abnormal conditions.

On the basis of its review, the staff has determined that the level of detail provided on the NDAS demonstrates an adequate design basis for preliminary design and are sufficient to ensure the protection of the public and minimize danger to life or property, consistent with 10 CFR 50.34, 50.35, and 50.40. Failure of any component of the NDAS will result in a conservative, lower flux state.

Therefore, the staff finds that the information provided on the NDAS is sufficient and meets the applicable regulatory requirements for issuance of a construction permit in accordance with 10 CFR 50.35 and 50.40.

4a.4.10 Target Solution Vessel and Light Water Pool

The staff evaluated the sufficiency of the TSV and light water pool, as described in SHINE PSAR Section 4a2.4. While the ISG Augmenting NUREG-1537 does not have a section dedicated to the target solution vessel, which is unique to SHINE, the staff assessed whether SHINE provided information that satisfies the requirements of 10 CFR 50.34(a)(4).

The TSV is part of the PSB, which comprises the TSV, the TSV dump tank, and the TOGS. The TOGS is described in SHINE PSAR Section 4a2.8. The light-water pool serves multiple functions, including heat removal and radiological shielding.

SHINE PSAR Section 4a2.4.1 describes the physical characteristics of the TSV, including the physical dimensions of the TSV and supporting structures. The SHINE PSAR also states that the TSV is designed and fabricated following the intent of the American Society of Mechanical Engineers (ASME) Boiler and Pressure Vessel Code (BPVC), Section III. Ongoing research at Oak Ridge National Laboratory (ORNL) is intended to determine whether the TSV design, fabrication process, and construction materials satisfy the requirements described in the code.

In response to RAI 4a2.4-1 (Reference 14), which asked the applicant to provide a discussion of the applicable ASME Code and discuss the features of the SHINE design that prevent application of the code as written, the applicant responded (Reference 21) that although the TSV will be designed and fabricated following the intent of the ASME BPVC, Section III, the TSV will not be certified to Section III of the ASME BPVC because its fabrication material is not included in ASME BPVC Section II. The applicant added that the results from the irradiation and corrosion testing being performed at ORNL will inform the final design of the TSV, which it plans to describe in detail in the SHINE FSAR. The results of the testing at ORNL will also verify that the stress intensity encountered by the TSV under design loadings during the design lifetime does not exceed the allowable stresses of the TSV material, including postulated accident loadings, which will be factored into the TSV design parameters.

The staff finds this response provided sufficient clarification regarding application of ASME BPVC, Section III, and demonstrates adequate design criteria for a preliminary design. The staff will confirm that the final design conforms to this design basis during the evaluation of the SHINE FSAR.

SHINE PSAR Section 4a2.4.1.5, “Chemical Interactions and Neutron Damage,” states that a materials surveillance and inspection program for the TSV and other PSB components will be described in the FSAR. In RAI 4a2.4-2 (Reference 14), the staff asked that the applicant provide a list of surveillance and inspection requirements, as well as information to show that the design will allow the required periodic surveillance and inspections to be performed.

In response to RAI 4a2.4-2, (Reference 21), the applicant committed to provide surveillance and inspection capabilities for these components to assess mechanical integrity and to verify that corrosion rates are acceptable.

The staff finds this response provides a commitment to provide surveillance and inspection capabilities, and demonstrates adequate design criteria for a preliminary design. The staff will confirm that the final design conforms to this design basis during the evaluation of SHINE’s FSAR.

SHINE PSAR Section 4a2.4.2 states that the TSV will be located inside the light water pool, with the top of the TSV 6 feet below the water’s surface. It will be constructed from concrete and lined with stainless steel and is designed to withstand the chemical environment of the target solution.

SHINE PSAR Section 4a2.4.2.1, “Design of Light Water Pool,” states that the steel liner of the light water pool is designed to withstand the chemical environment of the target solution in the event of a breach that leaks target solution into the pool. However, the staff is concerned that any accumulation or plateout of fission products occurring on the liner surfaces (including corners, imperfections on weld points, etc.) could lead to increased local dose rates that might challenge the limits in 10 CFR Part 20, “Standards for Protection Against Radiation.”

Therefore, in RAI 4a2.4-3 (Reference 14), the staff asked that the applicant provide information discussing whether the design characteristics of the pool liner preclude any accumulation or plateout of fission products that could challenge the limits in 10 CFR Part 20.

In response to RAI 4a2.4-3 (Reference 20), the applicant stated, in part, that under normal operating conditions, the target solution does not come in contact with the light water pool or the light water pool steel liner. The target solution is located inside the PSB, which consists of the TSV, the TOGS, and the TSV dump tank. As described in PSAR Section 4a2.2.1.4, “Primary System Boundary,” the PSB components are designed to be compatible with the target solution to avoid corrosion and other unwanted metallurgical effects that could lead to compromising the PSB. Additionally, the TSV is located within the SASS pressure boundary. The SASS, along with the PCLS, provides another barrier between the target solution and the light water pool, should a leak in the TSV develop. The closed loop design of the PCLS prevents the commingling of the PCLS coolant with the water in the light water pool. In the event of a breach in which the target solution leaks into the light water pool, the IU cell where the leak is occurring would be shut down. The UNCS may then be used to process the contents of the light water pool by separating out the uranium and passing the contaminated water on for downstream processing. The IU cell would then be decontaminated by wash downs or other suitable means, as needed.

The staff finds this response provides sufficient information on the TSV, SASS pressure boundary, and pool liner design criteria, and demonstrates adequate design criteria for a preliminary design. The staff will confirm that the final design conforms to this design basis during the evaluation of SHINE's FSAR.

On the basis of its review, the staff has determined that the level of detail provided on the TSV and the light water pool demonstrates an adequate design basis for preliminary design and satisfies the applicable acceptance criteria of the ISG Augmenting NUREG-1537, Part 2. The staff finds that the applicant's description of the TSV and light water pool, including operating limits and operating conditions, is adequate and sufficient to ensure the protection of the public and minimize danger to life or property, consistent with 10 CFR 50.34, 50.35, and 50.40. The SCAS is conservatively designed to fail to a safe, non-critical geometry and its components are adequately designed to withstand operational and credible accidents in the environment. The light water pool provides cooling to the TSV and provides an additional layer of protection against radiation damage for local components.

Therefore, the staff finds that the information provided on the TSV and light water pool is sufficient and meets the applicable regulatory requirements for issuance of a construction permit in accordance with 10 CFR 50.35.

4a.4.11 Irradiation Facility Biological Shield

The staff evaluated the sufficiency of the IF biological shield as described in SHINE PSAR Section 4a2.4, using the guidance and acceptance criteria from Section 4a2.4, "Biological Shield," of the ISG Augmenting NUREG-1537, Parts 1 and 2.

Consistent with the review procedures of Section 4a2.4 of the ISG Augmenting NUREG-1537, Part 2, the staff considered whether the shield design bases are sufficient to protect the health and safety of the public and employees.

The ISG Augmenting NUREG-1537, Part 2, Section 4a2.4 "Acceptance Criteria," states, in part, that "the principal objective of the shield design should be to ensure that the projected radiation dose rates and accumulated doses in occupied areas do not exceed the limits of 10 CFR Part 20, 'Standards for Protection Against Radiation,' and the guidelines of the facility's [as low as is reasonably achievable] ALARA program." Therefore, in RAI 4a2.5-1 (Reference 14), in order to determine the adequacy of the shielding design, the staff asked that the applicant provide a list of the components inside the IU cell that are considered significant contributors to the gamma and neutron flux and dose rates at locations that could be occupied, as well as to the unrestricted environment.

In response to RAI 4a2.5-1 (Reference 21), the applicant stated that the components inside the IU cell that are considered to be significant contributors to the gamma and neutron fluxes are the neutron driver and the SCAS. The applicant also provided the magnitude of the contributions from both the neutron driver and the SCAS.

The staff finds this response satisfies the acceptance criteria of the ISG Augmenting NUREG-1537, Section 4a2.4 and demonstrates adequate design criteria for a preliminary design. The staff will confirm that the final design conforms to this design basis during the evaluation of SHINE's FSAR.

On the basis of its review, the staff has determined that the level of detail provided on the IF biological shield is adequate and supports the preliminary design and satisfied the applicable acceptance criteria of NUREG-1537, Part 2, Section 4a2.4, allowing the staff to make the following relevant findings: (1) The biological shield is designed to meet the goals described in SHINE PSAR Chapter 11, "Radiation Protection Program and Waste Management," as discussed in the staff evaluation in Chapter 11 of the SER, and meets or exceeds the requirements in 10 CFR Part 20; (2) the proposed materials and configuration are consistent with staff-endorsed guidance (American Nuclear Standards Institute [ANSI]/American Nuclear Society [ANS]-6.4.2-2006, "Specification for Radiation Shielding Materials"; American Concrete Institute [ACI] 349-06, "Code Requirements for Nuclear Safety-Related Concrete Structures and Commentary"; and Regulatory Guide 1.69, Revision 1, "Concrete Radiation Shields and Generic Shield Testing for Nuclear Power Plants" (Reference 37).

Therefore, the staff finds that the information provided on the IF biological shield is sufficient and meets the applicable regulatory requirements and guidance for issuance of a construction permit in accordance with 10 CFR 50.35.

4a.4.12 Nuclear Design

The staff evaluated the sufficiency of the nuclear design as described in SHINE PSAR Section 4a2.6, "Nuclear Design," using the guidance and acceptance criteria from Section 4a2.5, "Nuclear Design," of the ISG Augmenting NUREG-1537, Parts 1 and 2.

Normal Operating Conditions

Consistent with the review procedures of Section 4a2.5 of the ISG Augmenting NUREG-1537, Part 2, the staff considered normal operating conditions of the nuclear design to ensure a complete, operable core has been analyzed.

SHINE PSAR Section 4a2.6.1 describes SCAS modes of operations. The SCAS operates under three modes that are relevant to nuclear design: Mode 1, startup mode; Mode 2, irradiation mode; and Mode 3, post-irradiation mode. A fourth mode is described in SHINE PSAR Chapter 7, "Instrument and Control Systems," and is not discussed in this chapter. In each case, the IU can be shut down by the control systems (TRPS and TPCS), which will trip on high PCLS temperature or high flux. As an additional administrative control, the operators can manually dump the contents of the TSV to the dump tanks, although these measures are not required for safe shutdown or operation. When shutdown, the neutron driver is de-energized and the target solution is held in criticality-safe dump tanks. There are two completely independent dump valves, along with independent dump lines and overflow lines. The dump valves fail open and can be triggered by the TRPS, TPCS, and the operator.

The target solution will be processed through the UNCS after it has been through a specified number of irradiation cycles. The burn-up after this amount of exposure is very small, with less than 0.02 percent of U-235 undergoing fission per irradiation cycle. The applicant estimates that xenon and samarium accumulation will reduce operating neutron multiplication and fission power by less than 10 percent relative to a system without xenon-135 and samarium-149. A complete analysis of the effects of poison and plutonium buildup will be submitted in the FSAR. The staff notes that given the small amount of burnup, the effects of poison and plutonium buildup can reasonably be left for consideration during review of the FSAR.

The proposed design describes the reactivity and reactivity changes of the system during all modes of operation, including reactivity worths of the IU components for each mode of operation, the worth of water held up outside the TSV and the effects of removing that water, and expected changes in reactivity that would occur due to voiding of the cooling system. The system interfaces with the TPCS and TRPS to shut down in abnormal conditions (e.g., loss of power, high flux, high hydrogen concentration). The physical and administrative controls that are designed to prevent a criticality from occurring are sufficient.

Minor power oscillations during operation are expected, but should be small and self-limiting due to the low power density and negative temperature coefficients. In the case of a TOGS failure, the resulting void collapse will cause a small reactivity increase, but not large enough to result in a criticality. A complete analysis of TSV kinetics will be provided in the FSAR. The staff notes that this analysis can reasonably be left for consideration during review of the FSAR.

The ISG Augmenting NUREG-1537, Part 2, Section 4a2.5.1, "Normal Operating Conditions," states that the PSAR should give reactivity worths for control rods, reflector units, and other in-core components for all anticipated configurations. While some information is presented on coefficients of reactivity in SHINE PSAR Section 4a2.6.2.4, "Coefficients of Reactivity," the staff noted that additional information was needed to verify that the SHINE IUs will not become critical under any phase of operation. In RAI 4a2.6-3 (Reference 14), the staff asked that the applicant compare the reactivity worths of all components in the IU to the margin to criticality in the TSV for all phases of operation.

In response to RAI 4a2.6-3 (Reference 21), the applicant stated, in part, that in Mode 1, startup conditions:

> [T]he TSV is designed to be filled with uranyl sulfate solution to a level that is approximately 5 percent by volume below critical.… While the SHINE TSV is not a reactor, there are two moveable components identified within the nuclear assembly that have the potential for significant reactivity effects. These two components are the tritium chamber and the neutron multiplier. Removing the neutron multiplier and flooding the tritium chamber with water from the LWPS were calculated to both have negative reactivity effects, thus increasing the margin to criticality.

The staff finds this response satisfies the acceptance criteria of ISG Augmenting NUREG-1537, Section 4a2.5.1 and demonstrates adequate design criteria for a preliminary design. The staff will confirm that the final design conforms to this design basis during the evaluation of SHINE's FSAR.

As the SHINE system transitions from Mode 1, startup conditions, to Mode 2, irradiation conditions, the effective neutron multiplication factor (k_{eff}) of the system decreases. Replacing the neutron multiplier and flooding the tritium chamber with water from the LWPS were calculated to both have negative reactivity effects, thus increasing the margin to criticality. The staff will confirm that the final design conforms to this design basis during the evaluation of the SHINE FSAR.

The SHINE SCAS cooling includes a PCLS and an LWPS cooling loop. The staff notes that a pipe break in one of the cooling systems or other means of introducing voids, lowering the coolant density in the system, could result in a reactivity insertion. To determine if voiding out the cooling system could turn the TSV from a subcritical system into a critical reactor, in

RAI 4a2.6-4 (Reference 14), the staff asked that the applicant provide reactivity worth for voiding out the cooling system over the full range from nominal coolant temperature and density to a fully voided cooling system.

In response to RAI 4a.2.6-4 (Reference 21), the applicant provided reactivity changes due to LWPS and PCLS voids. The data provided shows that for the PCLS, there is a negative insertion of reactivity as the percent void increases. In the LWPS, a significant amount of void (greater than 20 percent) must be present to add a substantial amount of reactivity at startup conditions. The applicant stated, in part, that:

> The design will prevent the introduction of a significant amount of void into the SCAS, such as the use of a delay tank to vent entrained voids located downstream of the LWPS cooling pump. Positive pressures are expected in the piping line downstream of the LWPS cooling pump, which will prevent the introduction of void since a break in the line would result in the loss of water rather than the ingress of air. Flow meters and pressure detection on the LWPS are planned, which would also indicate if a significant amount of air entered the pump, since the output pressure and flow will decrease.

The staff finds this response satisfies the acceptance criteria of ISG Augmenting NUREG-1537, Section 4a2.5.1 and demonstrates adequate design criteria for a preliminary design. The staff will confirm that the final design conforms to this design basis during the evaluation of the SHINE FSAR.

Section 4a2.5.1 of the ISG Augmenting NUREG-1537, Part 2, states that there should be systems that are “sufficiently redundant and diverse to control all proposed excess reactivity safely and to safely shut down the reactor and maintain it in a shutdown condition.” The SHINE IU system relies on dumping the solution to the TSV dump tank under abnormal conditions. SHINE PSAR Section 4a2.6.3.6, “Redundancy and Diversity of Shutdown Methods,” states that the dump system has redundant dump valves. In RAI 4a2.6-8 (Reference 14), the staff asked that the applicant provide additional information on the design drain rate of the TSV when the dump valves are open, the delay time from the drain valve open signal until the valves start to open, and the duration of time it takes the dump valves to open.

In response to RAI 4a2.6-8 (Reference 21), the applicant noted that the TSV drain system is designed to drain a minimum of 20 gallons per minute (gpm) when the dump valves are open (design drain rate is conservatively based on only one drain line available), the delay time between the conditions that would trigger a dump signal and the start of the dump valves opening will be a maximum of one second, and the duration of time it takes for the dump valves to open will be less than 5 seconds.

The staff finds this response satisfies the acceptance criteria of Section 4a2.5.1 of the ISG Augmenting NUREG-1537, and demonstrates adequate design criteria for a preliminary design. The staff will confirm that the final design conforms to this design basis during the evaluation of SHINE’s FSAR.

Section 4a2.5.1 of the ISG Augmenting NUREG-1537, Part 2, “Acceptance Criteria,” states, in part, “the reactivity impacts of radiolytic gas and void formation, fission product gas removal, fuel solution and acid addition, and condensate return to the core should be provided.” This analysis should also include the evaporation of water. SHINE PSAR Section 4a2.6.1.1, “Gas Management System Effects,” states, in part, that “the radiolysis of water in the system causes

an anticipated increase in reactivity during operation…." The SHINE PSAR infers that water is constantly leaving the TSV through radiolysis and evaporation. A certain amount of water will be held up outside the TSV as it goes through the recombination and condensation process before it is returned to the TSV, increasing the reactivity in the system.

In RAI 4a2.6-9 (Reference 14), the staff asked the applicant to provide quantitative estimates of the water inventory outside of the TSV, the reactivity increase caused by removing that water from the TSV, and the increase in fuel solution concentration.

In response to RAI 4a2.6-9 (Reference 21), the applicant stated that a small percentage of the water volume of the TSV may be held up outside of the TSV in the TOGS. The reactivity increase caused by removing that water from the TSV during irradiation mode was estimated to be small in comparison to the expected subcritical reactivity of the SHINE system during irradiation mode.

The staff finds this response satisfies the acceptance criteria of ISG Augmenting NUREG-1537, Section 4a2.5.1 and demonstrates adequate design criteria for a preliminary design. The staff will confirm that the final design conforms to this design basis during the evaluation of SHINE's FSAR.

On the basis of its review, the staff has determined that the level of detail provided on normal operating characteristics is adequate and supports the preliminary design and satisfied the applicable acceptance criteria of NUREG-1537, Part 2, Section 4a2.5.1.

Therefore, the staff finds that the information provided on the normal operating conditions is sufficient and meets the applicable regulatory requirements and guidance for issuance of a construction permit in accordance with 10 CFR 50.35 and 50.40.

Target Solution Physics Parameters

Consistent with the review procedures of Section 4a2.5 of the ISG Augmenting NUREG-1537, Part 2, the staff considered target solution physics parameters of the nuclear design to ensure:
(1) generally accepted and validated methods have been used for calculations, and
(2) derivation and adequacy of uncertainties and errors have been considered.

SHINE PSAR Section 4a2.6.2, "Target Solution Physics Parameters," describes how a variety of codes will be used to calculate various nuclear physics parameters. Monte-Carlo N-Particle Transport Code-5 (MCNP5) will be used to calculate neutron flux, reactivity, dose rates, neutron lifetime, and reaction rates. COUPLE, part of the NRC's SCALE code, will be used to calculate flux-dependent cross-sections and fission yields. ORIGEN will be used to generate source term concentrations and activities following various irradiation and decay intervals. The staff has also reviewed SHINE's uncertainty analysis for the calculations using these codes, which was submitted in responses to the staff's RAIs. These calculations will be compared to benchmark experiments for validation.

The ISG Augmenting NUREG-1537, Part 2, Section 4a2.5.2, "Reactor Core Physics Parameters," states, in part, that "the applicant should present information on core physics parameters that determine reactor operating characteristics…." The SHINE PSAR did not discuss the effects of xenon-135 and samarium-149 on the TSV operation irradiation cycle. Therefore, in RAI 4a2.6-5 (Reference 14), the staff asked the applicant to provide an estimate of the reactivity due to xenon-135 and samarium-149 over the cycle and its effect on neutron

multiplication and fission power, since the time required to establish equilibrium xenon and samarium is significant compared to the length of an irradiation cycle.

In response to RAI 4a2.6-5 (Reference 21), the applicant stated that the reactivity worth of fission product poisons such as xenon and samarium is small compared to the temperature and void defects. The staff notes that the applicant committed to provide a complete analysis of the effects of poisons in the FSAR. The staff notes that this analysis can reasonably be left for consideration during review of the FSAR.

The staff finds this response satisfies the acceptance criteria of ISG Augmenting NUREG-1537, Section 4a2.5.2 and demonstrates adequate design criteria for a preliminary design. The staff will confirm that the final design conforms to this design basis during the evaluation of SHINE's FSAR.

The ISG Augmenting NUREG-1537, Part 2, Section 4a2.5.2, "Reactor Core Physics Parameters," states, in part, that "the applicant should present information on core physics parameters that determine reactor operating characteristics…."

Therefore, in RAI 4a2.6-6 (Reference 14), the staff asked that the applicant provide an uncertainty analysis for the reactivity worths, coefficients, and k_{eff} values.

In response to RAI 4a2.6-6 (Reference 21), the applicant stated, in part, that "reactivity worths coefficients, and k_{eff} values are calculated using MCNP5, version 1.60 … SHINE does not plan to use the absolute k_{eff} predictions from MCNP as the basis to determine operating k_{eff} of the SCAS. Instead, SHINE plans to use a volume margin-to-critical approach coupled with the calculated reactivity worth of that volume…." SHINE will also ensure that the detector, source, and SCAS geometry result in conservative 1/M plots to ensure that early predictions of critical volume are lower than actual critical volume and result in lower actual k_{eff} values. A plan to validate the neutronics predictions will be included with the FSAR.

The staff finds this response satisfies the acceptance criteria of ISG Augmenting NUREG-1537, Section 4a2.5.2 and demonstrates adequate design criteria for a preliminary design. The staff will confirm that the final design conforms to this design basis during the evaluation of SHINE's FSAR.

Preliminary calculations show that target solution void, temperature, and power coefficients will generally be negative for all modes of operation. The temperature coefficients for the PCLS and LWPS may not be negative during some conditions, but the combined effects of reactivity coefficients are expected to result in strong negative feedback. The target solution temperature coefficient should be the most significant because the majority of the heat is deposited directly in the target solution. The applicant's analyses show that the combined reactivity coefficients should be sufficiently negative over the anticipated range of operating conditions.

On the basis of its review, the staff has determined that the level of detail provided on target solution physics parameters is adequate and supports the preliminary design and satisfied the applicable acceptance criteria of NUREG-1537, Part 2, Section 4a2.5.2.

Therefore, the staff finds that the information provided on the normal operating conditions is sufficient and meets the applicable regulatory requirements and guidance for issuance of a construction permit in accordance with 10 CFR 50.35.

Operating Limits

Consistent with the review procedures of Section 4a2.5 of the ISG Augmenting NUREG-1537, Part 2, the staff considered operating limits of the nuclear design to ensure methods and assumptions used in determining operating limits are consistent.

Specific values for operating limits will be provided in the FSAR after the final design is complete. However, the SHINE PSAR discusses some requirements. SHINE PSAR Section 4a2.6.2, "Target Solution Physics Parameters," describes the need for void coefficients to be negative throughout all operating conditions and combined reactivity coefficients should be sufficiently negative over the anticipated range of operating conditions. Additionally, the target solution burn-up should be minimal in the SCAS.

SHINE PSAR Section 13a2.1.2, "Insertion of Excess Reactivity/Inadvertent Criticality," discusses the three initiating events that may result in inadvertent insertions of excess reactivity: excessive cooldown of the TSV, increased pressure in the TSV, and excess volume of target solution. None of these events should result in damage to the PSB. In the event of a loss of power, the neutron driver will de-energize and the target solution will be transferred to criticality-safe dump tanks.

As previously stated above under "Normal Operating Conditions," a complete analysis of the TSV kinetics and effects of poison and plutonium buildup will be submitted in the FSAR. The staff concluded that this analysis can reasonably be left for consideration during review of the FSAR. A detailed evaluation of technical specifications, including limiting conditions of operations (LCOs) and surveillance requirements, will also be performed during the review of the FSAR.

On the basis of its review, the staff has determined that the level of detail provided on operating limits is adequate and supports the preliminary design and satisfied the applicable acceptance criteria of NUREG-1537, Part 2, Section 4a2.5.3.

Therefore, the staff finds that the information provided on the normal operating limits is sufficient and meets the applicable regulatory requirements and guidance for issuance of a construction permit in accordance with 10 CFR 50.35.

Nuclear Design Findings

On the basis of its review, the staff has determined the SHINE PSAR gives an adequate description of the proposed configuration of the SCAS during the three relevant modes of operation. Target solution behavior during operation has been adequately addressed, including gaseous fission product buildup and removal, poisons, and power oscillations. Reactivity analyses include reactivity values for the in-core components. Analyses of neutron lifetime, effective delayed neutron fraction, and coefficients of reactivity are in progress or have been completed using methods validated at similar facilities and through experimental measurements. Final values for all nuclear physics parameters will be presented in the FSAR.

The staff finds that the applicant's descriptions of the nuclear design component of the facility are adequate and are consistent with 10 CFR 50.34, 50.35, and 50.40. Therefore, the staff finds that the applicant's description of the nuclear design is sufficient for the issuance of a construction permit.

4a.4.13 Thermal-Hydraulic Design

The staff evaluated the sufficiency of the thermal hydraulic design as described in SHINE PSAR Section 4a2.7, “Thermal Hydraulic Design,” using the guidance and acceptance criteria from Section 4a2.6, “Thermal-Hydraulic Design,” of the ISG Augmenting NUREG-1537, Parts 1 and 2.

Consistent with the review procedures of Section 4a2.6 of the ISG Augmenting NUREG-1537, Part 2, the staff reviewed the thermal-hydraulic analyses for completeness and considered whether the analyses addressed all issues that affect key parameters (e.g., flow, temperature, pressure, power density, pH, and peaking). The staff considered whether the analyses submitted show that sufficient cooling capacity exists to prevent target solution overheating and loss of target solution barrier for anticipated system operating conditions.

The ISG Augmenting NUREG-1537, Part 2, Section 4a2.6 states, in part, that the applicant should discuss possible system “instability following perturbation to the system (including from radiolytic gas generation).” Therefore, in RAI 4a2.7-1 (Reference 14), the staff asked that the applicant provide a linear stability analysis of the full system and an analysis and discussion of the expected bounds of any expected oscillations.

In response to RAI 4a2.7-1 (Reference 21), the applicant provided a linear stability analysis and stated, in part, that:

> Subcritical accelerator-driven fissile solution systems were found to be unconditionally stable in the linear approximation. Perturbations from the TOGS can result in pressure changes in the TSV. However, these pressure changes only serve to impose a reactivity feedback term and do not alter the [conclusions in the analysis].
>
> Oscillations in TSV fission power are expected to be the result of coupled system oscillations, principally due to potential pressure variations in the TOGS and source oscillations from the neutron driver. Pressure variations in the TOGS at the TSV are expected to be less than 0.5 psi, and this pressure change has been estimated to minimally affect TSV reactivity during irradiation. . . This change in reactivity is estimated to result in [a minimal] change in TSV power.
>
> Oscillations in the neutron driver neutron output are expected to be less than 3 percent from the target neutron output. With a SCAS and no feedback effects, a change of 3 percent in the neutron source term would result in a 3-percent change in the output of the assembly. Due to negative temperature and void reactivity coefficients, the oscillations from this source variation will be less than 3 percent.
>
> Total oscillations in TSV fission power are expected to be [small] due to potential superposition of these sources of oscillation. As described in PSAR Section 4a2.6.1.2, “TSV Operating Characteristics,” results of transient modeling of power oscillations using a dynamic model and reactivity feedback effects will be provided with the FSAR.

The staff finds this response satisfies the acceptance criteria of ISG Augmenting NUREG-1537, Section 4a2.6 and demonstrates adequate design criteria for a preliminary design. The staff will

confirm that the final design conforms to this design basis during the evaluation of SHINE's FSAR.

Heat Removal Systems

SHINE PSAR Section 4a2.7.1.1, "Thermal-Hydraulic Design," discusses the systems used to remove heat during irradiation and shutdown operations. The paths for heat removal from the TSV are the PCLS, the LWPS, and the TOGS.

SHINE PSAR Section 4a2.7.1.1.1, "PCLS Cooling Loop," describes the PCLS cooling loop, which circulates water in an upward direction past the TSV heat transfer surfaces using forced convective cooling. Energy can also be deposited into the PCLS coolant by neutron and gamma radiation. The PCLS cooling water removes heat from the TSV, then flows to reject the heat through a heat exchanger in the radioisotope process facility cooling system (RPCS).

SHINE PSAR Section 4a2.7.1.1.2, "LWPS Cooling Loop," describes the LWPS cooling loop, which removes heat from the neutron multiplier and from the neutron driver tritium target chamber using forced convective flow. Energy can also be deposited into the LWPS coolant by neutron and gamma radiation. The LWPS also removes heat from the light water pool. The heat loads on the light water pool are energy deposition by neutron and gamma radiation from an operating IU and decay heat loads from the dump tank when it contains the irradiated target solution. The LWPS cooling water rejects heat to the RPCS. The TOGS operates as a closed loop system in which sweep gas is circulated above the top of the TSV liquid level. The gas is circulated through a flow loop that removes iodine from the off-gas, recombines radiolysis-generated hydrogen and oxygen to keep them below flammable limits, and condenses water vapor and returns the liquid water to the TSV. Heat from the condensation and recombination processes are transferred through heat exchangers that ultimately reject heat to the RPCS.

The cooling system design basis and details of the PCLS, LWPS, and RPCS are provided in SHINE PSAR Chapter 5, "Cooling Systems." The staff's evaluation of these systems is in Chapter 5, "Cooling Systems," of this SER.

Coolant Hydraulic Characteristics of the Target Solution

SHINE PSAR Section 4a2.7.2, "Coolant Hydraulic Characteristics of the Target Solution Vessel," provides details on the PCLS. The PCLS volumetric coolant flow rate is 4.7 liters per second. The coolant water enters at 20 degrees Celsius (°C) and exits at 26.7 °C. The TSV pressure is maintained below the PCLS pressure to prevent leakage out of the TSV in cases where the PSB is breached. In the case of leakage of water from the PCLS into the TSV, the dilution of the target solution will lead to a negative reactivity insertion. If the breach is large enough so that the pressure difference cannot be maintained, then some of the radioactive target solution could leak into the PCLS cooling water. The nominal temperature of the solution in the TSV is 60 °C. The operating conditions in the TSV should prevent plate out of chemicals on the PCLS heat transfer surfaces. A loss or degradation of the PCLS cooling system would cause an increase in the target solution temperature. If the target solution temperature rises above the allowable limit, the TRPS system will shut down the neutron driver and dump the target solution to the TSV dump tank where it will be cooled by natural convection in the light water pool. The light water pool is cooled by the LWPS. In cases that the LWPS is not operating, the light water pool has a large heat capacity that can be used to remove decay heat from the TSV dump tank for long periods of time without active cooling. The heat capacity of

the pool is large enough that the pool temperature will increase by only 11.8 °F from 90 days of decay heat load.

The cooling system design basis and details of the PCLS and LWPS are provided in SHINE PSAR Chapter 5. The staff's evaluation of these systems is in Chapter 5 of this SER.

Target Solution Thermal Power Density Distribution

SHINE PSAR Section 4a2.7.3, "Target Solution Thermal Power Density Distribution," states "[a] detailed analysis of the thermal and nuclear parameters of the target solution (power density, heat flux, neutron flux, and detailed temperature gradient profile) will be determined during final design. For physical properties of the target solution (e.g., pH, uranium density) in the TSV, see PSAR Table 4a2.2.1-1."

The staff notes the fission power density should have peaks in the axial and radial dimensions due to neutron transport effects. The radiolysis gas generation source is related to the fission power source since the primary mechanism for producing radiolysis gas is slowing down of the fission fragments. Neutron and gamma radiation can also be a source of radiolysis gas formation. The decay power distribution is not directly related to the fission power distribution since the fission products that are the source of decay power will circulate with the target solution. The thermal power density distribution should drive gradients in fluid temperature and void fraction that enhance natural circulation in the target solution.

The staff has considered the statements in the PSAR and determined, using the guidance in the ISG Augmenting NUREG-1537, that this information is specifically related to the final design of the SHINE facility, and as such, is not necessary for the issuance of a construction permit.

Thermal-Hydraulic Methodology

SHINE PSAR Section 4a2.7.4, "Thermal-Hydraulic Methodology," discusses the applicant's use of a correlation-based thermal-hydraulic methodology for safety calculations in the FSAR for calculations involving fluid flow and convective heat transfer. The heat transfer in structures will be used to solve conduction heat transfer equations. The nuclear heat generation rates will be calculated using MCNP5. Detailed thermal-hydraulic design optimization calculations will use Computational Fluid Dynamics (CFD) software, including Fluent and CFX, which includes volumetric heat and gas generation sources. The calculations are used to estimate the steady state target solution temperature, which is determined by the balance of the heat generation and the heat removal to the heat transfer surfaces by natural circulation flows caused by temperature and void fraction gradients. The results of experiments performed at the University of Wisconsin – Madison, using electric heaters and bubble injection to simulate the effects of volumetric heating and gas generation, will be used to determine the expected range of heat transfer coefficients and void fractions. They were also used to validate CFD calculations. Details of the methodologies including validation of the methods and calculation results will be provided in the SHINE FSAR.

Impact of Operating Conditions on Thermal-Hydraulics

SHINE PSAR Section 4a2.7.5, "Impact of Operating Conditions on Thermal-Hydraulics," states the heat removal and recombination capacities of the TOGS will determine the pressure of the gas space and target solution for a fixed TSV power. During steady-state operation, feedback effects on the power generation will determine the operating power and pressure where there is

a balance between the gas and water vapor generation in the TSV and the heat removal and recombination capacity of the TOGS. It is also possible that the system may operate in oscillatory mode with operating conditions that vary but stay within safety limits. SHINE provided a stability analysis of the accelerator-driven system that was performed by Los Alamos National Laboratory (LANL) and documented in the report LA-UR-14-28684, "Stability of Fissile Solution Systems." The LANL stability analysis showed that the system is stable across the expected range of operation and any oscillations should be damped. Driven bounded reactivity or source strength oscillations will also result in a bounded response. The target solution is expected to be stable with respect to chemical and physical properties during an irradiation cycle. Void formation in the target solution will be caused by radiolysis gas formation. The effects of the voids on nuclear and heat transfer performance of the system will be accounted for in the final design. The void formation should enhance the heat transfer in the TSV due to increased natural circulation flows due to buoyancy effects. The natural circulation should also help prevent large non-uniformities in temperature and solution concentration. Target solution pressure, temperature, pH, and solution concentration, will be monitored and maintained throughout the cycle. The hydrogen concentration in the cover gas will also be monitored and maintained through the cycle.

Cooling System Design Bases

SHINE PSAR Section 4a2.7.6, "Cooling System Design Bases," discusses the thermal-hydraulic design systems described above that provide heat removal from the TSV. The cooling system design basis and details of the PCLS and LWPS are provided in SHINE PSAR Chapter 5. The staff's evaluation of these systems is in Chapter 5 of this SER.

Cooling Performance

SHINE PSAR Section 4a2.7.7, "Cooling Performance," discusses generation of small amounts of radiolysis gases in the PCLS coolant since it is exposed to radiation from the TSV. The system is designed so that large pockets of gas will not accumulate and lead to significant void fractions in the region of the TSV.

Bulk Boiling of the Target Solution

SHINE PSAR Section 4a2.7.8, "Bulk Boiling of the Target Solution," discusses monitoring of the target solution temperature. The temperature and flow of the PCLS loop is also monitored to ensure adequate cooling of the TSV. The TRPS system will shut down the neutron driver and dump the target solution to the TSV dump tank. This should prevent boiling in the TSV. If boiling were to occur due to unforeseen circumstances, the target solution and off gases will still be confined within the PSB and will not present a radiation hazard.

Thermal-Hydraulic Design Findings

The staff has reviewed the thermal-hydraulic design of the IU. The thermal-hydraulic design considers the dominant design for heat removal, cover gas control, and target solution control. On the basis of its review, the staff has determined that the SHINE facility has considered all significant heat loads and has provided adequate heat removal capacity and heat transfer area to remove the heat loads and maintain the TSV fluid conditions under normal and abnormal conditions. The heat transfer coefficients that would be required to maintain the assumed design conditions should be achievable. Adequate heat removal through natural circulation and convection within the pool is also provided for decay heat generation in the TSV dump tank. The fluid and structures temperatures and heat fluxes eliminate concerns about critical heat flux in all cases. The TOGS has the recombination and condensation capacity to control the cover gas operating conditions and maintain them within normal operating parameters. The potential technical specifications that have been proposed are adequate to maintain operating conditions within acceptable limits.

The staff finds that the applicant's descriptions of the thermal-hydraulic design for the facility are adequate and are consistent with 10 CFR 50.34 and 10 CFR 50.35. Therefore, the staff finds that the applicant's descriptions of the thermal-hydraulic design are sufficient for the issuance of a construction permit.

4a.4.14 Gas Management System

The staff evaluated the sufficiency of the preliminary design of the SHINE gas management system, as described in SHINE PSAR Section 4a2.8, "Gas Management System," by using the guidance and acceptance criteria from Section 4a2.7, "Gas Management System," of the ISG Augmenting NUREG-1537, Parts 1 and 2.

Consistent with the review procedures of Section 4a2.7 of the ISG Augmenting NUREG-1537, Part 2, the staff evaluated the design of the gas management system and associated analysis for safe operation and compliance with all applicable chemical and radiological release criteria.

SHINE PSAR Section 4a2.8 describes the TOGS, which removes gaseous fission products and radiolytic gasses from the TSV during operation of the irradiation unit. The hydrogen recombiners prevent the hydrogen concentration from reaching a level where a deflagration or detonation could occur. This also serves to conserve water in the system. The TOGS also condenses water vapor and returns the water to the TSV. The construction materials used for the TOGS must be compatible with the expected chemical environment, and no credible scenarios should result in a loss of confinement as a consequence of corrosion. The geometry of the TOGS should preclude criticality even if filled with the target solution.

Consistent with the review procedures of the ISG Augmenting NUREG-1537, Part 2, Section 4a2.7, the staff should confirm that the design of the gas management system and the associated analysis are sufficient to provide reasonable assurance of safe operation of the reactor and compliance with all applicable chemical and radiological release criteria.

Therefore, in RAI 4a2.8-1 (Reference 14), the staff asked that the applicant provide the TSV operating condition envelope and design assumptions for the TSV off-gas recombiner system, including assumed design margins.

In response to RAI 4a2.8-1 (Reference 21), the applicant provided the TSV operating envelope, the TOGS design assumptions for the gas leaving the TSV headspace during normal operation, and the assumed design margins of the TOGS components.

The staff finds this response satisfies the acceptance criteria of ISG Augmenting NUREG-1537, Section 4a2.7 and demonstrates adequate design criteria for a preliminary design. The staff will confirm that the final design conforms to this design basis during the evaluation of SHINE's FSAR.

In RAI 4a2.8-2 (Reference 14), the staff asked that the applicant provide the basis for an "alert to the operator" at a hydrogen concentration of 2.5 percent and automatic shutdown of the neutron driver at 3 percent and to discuss whether there is sufficient margin to the deflagration limits at these values. The staff also asked the applicant to provide information indicating where the measurement of the hydrogen concentration is taken.

In response to RAI 4a2.8-2 (Reference 21), the applicant stated, in part, that:

> . . . normal operation of the TOGS maintains hydrogen concentrations at or below 2 percent in the off-gas. The alarm setpoint of 2.5 percent is slightly higher than normal operating conditions to provide advanced warning of abnormal conditions to the operator prior to reaching the trip setpoint, while not resulting in excessive alarms that distract the operators in the control room. The hydrogen concentration trip point of 3 percent provides approximately 33 percent margin to the lower flammability limit of 4 percent. The hydrogen concentration trip point ensures that the initial hydrogen concentration in the TOGS is sufficiently low in the event of an abnormal condition, such as a blower malfunction.
>
> The margin to the deflagration limit is sufficient because it is not expected that the hydrogen concentration would reach 4 percent in the event of a failure of a single active component (i.e., a blower) if the initial concentration is below 3 percent. After a blower failure is detected, such as through reduced flow, the TRPS would trip the TSV and neutron driver. A peak hydrogen concentration of 3.9 percent is estimated to occur in the case of a failure of a single active component (blower).

The staff notes that the hydrogen recombiner should be capable of preventing a hydrogen deflagration or detonation. The system will alert the operator of high hydrogen concentration if it reaches 2.5 percent by volume. Should the recombiner fail to prevent the rise of hydrogen concentration, the neutron driver will be shut down when the concentration reaches 3 percent. The applicant's analysis shows that this will provide sufficient margin to the lower flammability limit in the event of an abnormal condition such as a blower failure. The staff further notes that as long as sensors accurately capture the highest hydrogen concentration, both the alarm and the trip set-points would correspond to hydrogen concentrations below the upward propagation flammability limit in steam-saturated air of 4.1 percent listed in NUREG/CR-2726: "Light Water Reactor Hydrogen Manual." The system design pressure has not yet been specified but the applicant has stated the system will be designed to withstand system pressures expected during credible TSV power fluctuations and hydrogen deflagrations. The applicant committed to perform calculations during detailed design that will ensure there is sufficient margin to deflagration limits.

The staff finds this response satisfies the acceptance criteria of ISG Augmenting NUREG-1537, Section 4a2.7 and demonstrates adequate design criteria for a preliminary design. The staff will confirm that the final design conforms to this design basis during the evaluation of SHINE's FSAR.

SHINE PSAR Table 4a2.8-1, "TSV Off-Gas System Major Components," states that the condenser in the TSV off-gas condenser has a greater than 15 percent heat transfer margin. Since vapor pressure of water changes rapidly with temperature in the vicinity of 140 °F, for example, increasing the water temperature from 140 °F to 150 °F increases the vapor pressure by approximately 33 percent, the staff was concerned that non-condensable gas can significantly degrade the condensation efficiency in comparison to the condensation of pure steam.

Therefore, in RAI 4a2.8-4 (Reference 14), the staff asked that the applicant provide the TSV and off-gas system operating conditions and assumptions used to calculate the 15-percent margin.

In response to RAI 4a2.8-4 (Reference 21), the applicant provided the TSV operating envelope and TOGS design assumptions for the gas leaving the TSV headspace during normal operation. The applicant stated, in part, that:

> [An] analysis of the TSV off-gas condenser heat transfer capabilities will be performed during the final design of the system. The condenser analysis will document the inputs and assumptions to the design of the TSV off-gas condenser, including consideration for bounding operating pressures and temperatures, corresponding steam vapor pressure, expected non-condensable gas concentrations, the impact on condenser performance, and operational degradation during the life of the condenser. The required TSV off-gas condenser specifications will be determined based on the bounding inputs and conservative assumptions. Then, an additional 15-percent design margin will be applied to the heat transfer area.

The staff finds this response satisfies the acceptance criteria of ISG Augmenting NUREG-1537, Section 4a2.7 and demonstrates adequate design criteria for a preliminary design. The staff will confirm that the final design conforms to this design basis during the evaluation of SHINE's FSAR.

SHINE PSAR Section 4a2.8.5, "Abnormal Conditions," states that a pressure safety valve is connected to the TOGS piping to passively prevent an over pressurization within the PSB, which may cause structural damage to the IU. Since the TOGS system contains radioactive fission products, in RAI 4a2.8-5, the staff asked that the applicant provide information indicating whether the relief valve discharge passes through a system capable of filtering or scrubbing out radioactive fission products and provide a description of such a system if it exists.

In response to RAI 4a2.8-5 (Reference 21), the applicant stated, in part, that:

> [it] plans on connecting the pressure safety valve connected to the TOGS piping to the noble gas removal system (NGRS). The final design of the NGRS will ensure the system contains a relief volume capable of receiving gas from TOGS in the event of an over-pressurization. Relief gases in the NGRS will be sampled and held for decay. Upon completion of an appropriate decay period, the gases

> in the NGRS will again be analyzed for radioactivity, and released to the process vessel vent system (PVVS). In the PVVS, the off-gas is mixed with other process vessel exhaust gases, scrubbed through an acid-gas scrubber (caustic scrub solution), and vented to Radiological Controlled Area Ventilation System Zone 1 (RVZ1), and exhausted out the facility stack following high-efficiency particulate air (HEPA) and charcoal filtration. This process will ensure that the radioactive release and dose requirements of 10 CFR Part 20 are met.

The staff finds this response satisfies the acceptance criteria of ISG Augmenting NUREG-1537, Section 4a2.7 and demonstrates adequate design criteria for a preliminary design. The staff will confirm that the final design conforms to this design basis during the evaluation of SHINE's FSAR.

On the basis of its review, the staff has determined that the level of detail provided on the gas management system is adequate and supports the preliminary design. The staff finds that the preliminary design of the SHINE gas management system, as described in SHINE PSAR Section 4a2.8, is sufficient and meets the guidance and satisfies regulatory requirements for the issuance of a construction permit in accordance with 10 CFR 50.35. Further technical or design information required to complete the safety analysis may reasonably be left for later consideration. The staff will confirm that the final design conforms to this design basis during the evaluation of SHINE's FSAR.

Therefore, the staff finds that the information provided on the gas management system is sufficient and meets the applicable regulatory requirements and guidance for issuance of a construction permit in accordance with 10 CFR 50.35

4a.4.15 Probable Subjects of Technical Specifications

In accordance with 10 CFR 50.34(a)(5), the staff evaluated the sufficiency of the applicant's identification and justification for the selection of those variables, conditions, or other items which are determined to be probable subjects of technical specifications for the SHINE IU, with special attention given to those items which may significantly influence the final design.

Based on the information provided in PSAR Table 14a2-1, "SHINE Facility Proposed Parameters for Technical Specifications," the staff finds that identification and justification of the proposed limiting conditions of operations for the gas management system is sufficient and meets the applicable regulatory requirements for the issuance of a construction permit in accordance with 10 CFR 50.35. A detailed evaluation of technical specifications, including limiting conditions of operations and surveillance requirements, will be performed during the review of the SHINE FSAR.

4a.5 Summary and Conclusions

As described in SHINE PSAR Section 4a2.1, the IU is an accelerator-driven subcritical operating assembly used for the irradiation of an aqueous uranyl sulfate target solution, resulting in the production of Mo-99 and other fission products. The summary and conclusions provided below apply to the eight IUs that are part of SHINE's IF.

The staff evaluated the descriptions and discussions of SHINE's IUs, as described in SHINE PSAR Section 4a2 and supplemented by the applicant's responses to RAIs, and finds that the preliminary design of SHINE's IU, including the principal design criteria, design bases, and

information relative to materials of construction, general arrangements, provides reasonable assurance that the final design will conform to the design basis and meets all applicable regulatory requirements and acceptance criteria in or referenced in ISG Augmenting NUREG-1537. The IUs are designed to operate with a minimum heat load during normal operation, which would promptly lessen by at least an order of magnitude following IU shutdown. This, coupled with the absence of long-lived fission product build-up following shutdown, indicates that operation of this facility would pose a minimal risk to the health and safety of the public.

The staff finds that the applicant's description of the SCAS and its components, including operating limits and operating conditions, is consistent with 10 CFR 50.34 and 10 CFR 50.35. On the basis of its review, the staff has determined that the level of detail provided on the SCAS demonstrates an adequate design basis for preliminary design and satisfies the applicable acceptance criteria of the ISG Augmenting NUREG-1537, Part 2. Therefore, the staff concludes that the applicant's descriptions of the equipment, facilities, and procedures are adequate for the granting of a construction permit.

On the basis of these findings, the staff has made the following conclusions for the issuance of a construction permit in accordance with 10 CFR 50.35 and 50.40:

(1) SHINE has described the proposed design of the IU, including, but not limited to, the principal architectural and engineering criteria for the design, and has identified the major features or components incorporated therein for the protection of the health and safety of the public.

(2) Further technical or design information required to complete the safety analysis of the IU may be reasonably left for later consideration in the FSAR.

(3) There is reasonable assurance that, taking into consideration the site criteria contained in 10 CFR Part 100, the proposed facility can be constructed and operated at the proposed location without undue risk to the health and safety of the public.

(4) There is reasonable assurance: (i) that the construction of the SHINE facility will not endanger the health and safety of the public, and (ii) that construction activities can be conducted in compliance with the Commission's regulations.

(5) The issuance of a permit for the construction of the facility would not be inimical to the common defense and security or to the health and safety of the public.

4b Radioisotope Production Facility

SER Section 4b, "Radioisotope Production Facility," provides an evaluation of the preliminary design of SHINE's RPF as presented in SHINE PSAR Section 4b, "Radioisotope Production Facility Description."

4b.1 Areas of Review

The staff reviewed SHINE PSAR Section 4b against applicable regulatory requirements using regulatory guidance and standards to assess the sufficiency of the preliminary design and performance of the SHINE RPF systems. As part of this review, the staff evaluated descriptions and discussions of the SHINE RPF, with special attention to design and operating

characteristics, unusual or novel design features, and principal safety considerations. The preliminary design of the SHINE RPF was evaluated to ensure the sufficiency of principal design criteria; design bases; and information relative to materials of construction, general arrangement, and approximate dimensions, sufficient to provide reasonable assurance that the final design will conform to the design basis. In addition, the staff reviewed SHINE's identification and justification for the selection of those variables, conditions, or other items, which are determined to be probable subjects of technical specifications for the facility, with special attention given to those items which may significantly influence the final design.

Areas of review for this section included the facility and process description, the RPF biological shield, the radioisotope extraction system, and SNM processing and storage.

4b.2 Summary of Application

The summary provided in SER Section 4a.2, "Summary of Application," applies to both the IUs and the RPF.

4b.3 Regulatory Basis and Acceptance Criteria

The regulatory basis and acceptance criteria provided in SER Section 4a.3, "Regulatory Basis and Acceptance Criteria," applies to both the SHINE IF and RPF.

4b.4 Review Procedures, Technical Evaluation, and Evaluation Findings

The staff performed an evaluation of the technical information presented in SHINE PSAR Section 4b to assess the sufficiency of the preliminary design and performance of SHINE's RPF for the issuance of a construction permit, in accordance with 10 CFR 50.35(a). The sufficiency of the preliminary design and performance of SHINE's RPF is demonstrated by following applicable regulatory requirements, guidance, and acceptance criteria, as discussed in Section 4a.3 of this SER. A summary of this technical evaluation is described in SER Section 4b.5, "Summary and Conclusion."

For the purposes of issuing a construction permit, the preliminary design of the SHINE RPF may be adequately described at a functional or conceptual level. The staff evaluated the sufficiency of the preliminary design of the SHINE RPF based on the applicant's design methodology and ability to provide reasonable assurance that the final design will conform to the design bases with adequate margin for safety. As such, the staff's evaluation of the preliminary design of SHINE's RPF does not constitute approval of the safety of any design feature or specification. Such approval will be made following the evaluation of the final design of SHINE's RPF, as described in the FSAR, as part of SHINE's operating license application.

4b.4.1 Facility and Process Description

The staff evaluated the sufficiency of SHINE's facility and process description of its RPF, as described in SHINE PSAR Section 4b.1, "Facility and Process Description," using the guidance and acceptance criteria from Section 4b.1, "Facility and Process Description," of the ISG Augmenting NUREG-1537, Parts 1 and 2.

Consistent with the review procedures of Section 4b.1 of the ISG Augmenting NUREG-1537, Part 2, the information submitted in SHINE PSAR Section 4b.1 is descriptive in nature and requires no technical analysis. The information in this section served as background for more

detailed descriptions in later sections of the application. However, the staff considered whether the information presented in this section was consistent with other sections of the application.

SHINE PSAR Section 4b.1 contains a summary description of the RPF. It includes the principal safety considerations that were factored into the RPF design, construction, and operation. The design bases and functions of the systems and components are presented in sufficient detail to allow a clear understanding and to ensure that the RPF can be operated for its intended purpose and within regulatory limits for ensuring the health and safety of the operating staff and the public. Drawings and diagrams are provided to allow a clear and general understanding of the physical RPF features and of the processes involved. The primary function of the facility is to extract, purify, package, and ship medical radioisotopes. The primary fission product barrier in the RPF consists of vessels and associated piping, which contain the irradiated SNM and fission products (in solid, liquid or gaseous form) during the separation process.

The summary includes the names, amounts, and chemical and physical forms of the SNM that will be in process. The SHINE PSAR includes a list of byproduct materials (identity and amounts) in the RPF process solutions, finished products, and wastes from the process.

The SHINE PSAR also includes a detailed description of the design and construction of the equipment that will be used while processing SNM outside the IF. It includes enough detail to identify materials that may have moderating, reflecting, or other nuclear-reactive properties.

The summary describes the chemical and physical forms of SNM in process, including the maximum amounts of SNM in process in various building locations.

The SHINE PSAR presents a summary description of the raw materials, byproducts, wastes, and finished products of the RPF. This information includes data on expected levels of trace impurities or contaminants (particularly fission products or transuranic elements) characterized by identity and concentration.

The SHINE PSAR contains a general description of the design basis and implementation of any criticality safety features of the RPF for establishing and maintaining a nuclear criticality safety program. The staff evaluation of the criticality safety program is discussed in more detail in Section 6b.4.5, “Nuclear Criticality Safety,” of this SER.

The SHINE PSAR contains a description of the design basis and implementation of any hazardous chemical safety features of the RPF for establishing and maintaining a hazardous chemical safety program. The staff evaluation of the chemical safety program is discussed in more detail in Section 13b.4.1, “Processes Conducted Outside of the Irradiation Facility” and Section 13b.4.10, “Analyses of Accidents with Hazardous Chemicals Produced from Licensed Material,” of this SER.

Based on the information provided in SHINE PSAR Section 4b.1, the staff finds that the summary description of the facility and process of the SHINE RPF meets the acceptance criteria of the ISG Augmenting NUREG-1537 for the issuance of a construction permit in accordance with 10 CFR 50.35 and 50.40.

4b.4.2 Radioisotope Production Facility Biological Shield

The staff evaluated the sufficiency of SHINE's RPF biological shield, as described in SHINE PSAR Section 4b.2, "Radioisotope Production Facility Biological Shield," using the guidance and acceptance criteria from Section 4b.2, "Processing Facility Biological Shield,'' of the ISG Augmenting NUREG-1537, Parts 1 and 2, which refers to Section 4.4, "Biological Shield," of NUREG-1537, Parts 1 and 2.

Consistent with the review procedures of Section 4.4 of NUREG-1537, Part 2, the staff considered whether the objectives of the shield design bases are sufficient to protect the health and safety of the public and the facility staff, and that the design achieves the design bases.

SHINE PSAR 4b.2 states the production facility biological shield provides a barrier to protect SHINE facility personnel, members of the public, and various components and equipment of the SHINE facility by reducing radiation exposure. The RPF receives the irradiated target solution from the IU cell and distributes the target solution to various downstream processes. The target solution has a fission product activity that is defined in SHINE PSAR Chapter 11. The major areas outside of the IU cell that the target solution and by-product material occupy are as follows: Supercell (for molybdenum [Mo] extraction, purification, and packaging); Process tanks; Pipe chases; Waste processing cells; UREX cell; Thermal denitration (TDN) cell; Pump room hot cell; PVVS cell; and NGRS shielded cell.

SHINE PSAR Section 4b.2.2, "Biological Shield Design Basis," describes the shield design, which includes a detailed description of the design and construction of the RPF biological shield. The shielding design basis, including calculations that were used to prescribe the required form and substance of the shield, are provided. The shield design also describes the functional design of the biological shield, showing entry and exit facilities for products, wastes, process equipment, and operating staff.

SHINE PSAR 4b.2.3.3 states "[t]he biological shield requires a number of penetrations, inserts, and other features where the bulk shielding materials are reduced in thickness, or where the materials used in the penetration are less dense than the surrounding bulk material. Each penetration is designed with well-demonstrated techniques of non-linear paths, supplemental shielding, location in areas of low-incident radiation, and other methods to reduce streaming and leakage to ensure 10 CFR Part 20 limits are met."

SHINE PSAR Section 9a.2.1.1, "Radiologically Controlled Area Ventilation System," includes a detailed description of the ventilation system for the biological shield structure, including: (1) the design basis and function; (2) the design and location of vent ducting, filters, and fans; (3) details on vent system operating limits under both normal and emergency operating conditions; and (4) the design basis and function of all filtering and sequestration systems provided to control release of particulate and gaseous airborne radioactive contaminants to the environment under normal and emergency operating conditions. The RPF hot cells are ventilated with systems that are independent of the occupied zone ventilations. RPF hot cells are isolated from the building heating, ventilation, and air conditioning system upon detection of a leak, to prevent the spread of contamination.

The staff notes that all of the essential physical and operational features of the biological shield that are required to prevent the release of radioactive material and to maintain radiation levels below applicable radiation exposure limits prescribed in 10 CFR Part 20 for the protection of the facility personnel and the public are identified in SHINE PSAR Section 4b.2, and will be included

in the technical specifications that will be provided in SHINE FSAR Chapter 14, “Technical Specifications.”

On the basis of its review, the staff determined that the biological shield analysis in the SHINE PSAR offers reasonable assurance that the shield designs will limit exposures from the RPF sources of radiation so as not to exceed the limits of 10 CFR Part 20 and the guidelines of the facility ALARA program. The design offers reasonable assurance that the shield can be successfully installed with no radiation streaming or other leakage that would exceed the limits of 10 CFR Part 20 and the guidelines of the facility ALARA program. RPF components are sufficiently shielded to avoid significant radiation-related degradation or malfunction. Limiting conditions for operation and surveillance requirements for the shield will be included in technical specifications to be provided in Chapter 14 of the SHINE FSAR.

Based on the information provided in SHINE PSAR Section 4b.2, the staff finds that the description of the biological shield of the SHINE RPF meets the acceptance criteria of NUREG-1537 and the ISG Augmenting NUREG-1537 for the issuance of a construction permit in accordance with 10 CFR 50.35 and 50.40.

4b.4.3 Radioisotope Extraction System

The staff evaluated the sufficiency of SHINE’s RPF Radioisotope Extraction System, as described in SHINE PSAR Section 4b.3, “Radioisotope Extraction System,” using the guidance and acceptance criteria from Section 4b.3, “Radioisotope Extraction System,” of the ISG Augmenting NUREG-1537, Parts 1 and 2.

Consistent with the review procedures of Section 4b.3 of the ISG Augmenting NUREG-1537, Part 2, the staff considered whether the information provided a clear understanding of the processes and is consistent with the information in other sections of the PSAR (e.g., accident analyses, engineered safety features, technical specifications).

SHINE PSAR Section 4b.3 provides the design, detailed description and the following processing details about the MEPS:

- Process description, including process functions; safety functions; primary system interfaces; the process sequence, including molybdenum extraction and concentration and purification process sequences; and process equipment.

- Physical, chemical, and radioisotope properties of the target solution, including (proprietary) volumes in process and (proprietary) radioactive inventory in process.

- Criticality control features of the MEPS, provided through inherently safe geometrical design of MEPS equipment.

- Shielding and radiological protection features of the MEPS. The MEPS processes will be performed in shielded hot cells, which keeps worker exposure to radiation within the regulatory limits of 10 CFR 20.1201 and 20.1301. The processes are remotely, manually controlled, and performed with tele-manipulators, with minimal automated sequences. Radiation monitors and alarms are used to monitor release of radiological materials, monitor high background gamma dose levels, and to detect criticality events. Piping that contains potentially-radiological material is routed through shielded pipe

chases to limit the worker exposure to radiation. Tanks within the MEPS are inside shielded hot cells, so additional tank shielding is not required.

On the basis of its review, the staff determined that the MEPS process descriptions in SHINE PSAR Section 4b.3 provide a detailed account of the SNM in process, along with any included fission-product radioactivity. The description of the post-irradiation processing after the target solution is removed from the IF gives a clear understanding that these operations can be conducted safely in this facility. The MEPS processing facilities and apparatus are described in sufficient detail to provide confidence that the SNM and byproduct material can be controlled throughout the process so that the health and safety of the public will be protected. The criticality control measures provided throughout the MEPS process are consistent with a double-contingency principal, and the MEPS provides suitable defense-in-depth for the contained processes. The double contingency principle is defined in 10 CFR 70.4, "Definitions," to mean "that process designs should incorporate sufficient factors of safety to require at least two unlikely, independent, and concurrent changes in process conditions before a criticality accident is possible." ANSI/ANS-8.1-1983, "Nuclear Criticality Safety in Operations with Fissionable Materials Outside Reactors," further provides that "[p]roper application of the double contingency principle provides assurance that no single error or loss of a control will lead to the possibility of a criticality accident."

Sufficient engineered safety features have been developed that provide safe margins for all safety-related process variables. The staff notes that SHINE PSAR Section 4b.3 provides a complete description, including diagrams and drawings, in sufficient detail to give a clear understanding of the extraction and purification process and how the process can be performed safely within regulatory limits.

Based on the information provided in Section 4b.3 of the SHINE PSAR, the staff finds that the description of SHINE's Radioisotope Extraction System meets the acceptance criteria of ISG Augmenting NUREG-1537 for the issuance of a construction permit in accordance with 10 CFR 50.35 and 50.40.

4b.4.4 Special Nuclear Material Processing and Storage

SHINE PSAR Section 4b.4 describes the processing components and procedures involved in handling, processing, and storing SNM. The processing and storage of SNM is conducted in the production facility building and the waste staging and shipping building. SNM is used throughout the radiologically controlled area in both unirradiated and irradiated forms for the production of medical radioisotopes. Mo-99 is extracted from the irradiated SNM in the MEPS. Following Mo-99 extraction, the processing of irradiated SNM is performed in the UNCS. When cleanup of solution is required, the UNCS converts spent target solution in the form of uranyl sulfate into uranyl nitrate, separates the uranium from fission products and transuranic isotopes in the UREX process, and recovers uranium in the form of uranium oxide in the TDN process. The uranium oxide is loaded into cans and then returned to the target solution preparation system. Irradiated SNM is stored in criticality-safe tanks between irradiation cycles.

SHINE PSAR Section 4b.4.1, "Processing of Irradiated Special Nuclear Material," discusses the processing of irradiated SNM in greater detail.

Processing of Irradiated Special Nuclear Material

The staff evaluated the sufficiency of the SHINE RPF irradiated SNM processing and storage, as described in SHINE PSAR Section 4b.4.1, “Processing of Irradiated Special Nuclear Material,” using the guidance and acceptance criteria from Section 4b.4.1, “Processing of Irradiated Special Nuclear Material,” of the ISG Augmenting NUREG-1537, Parts 1 and 2.

Consistent with the review procedures of Section 4b.4.1 of the ISG Augmenting NUREG-1537, Part 2, the staff considered whether the information provided a clear understanding of the processes and is consistent with the information in other sections of the PSAR (e.g., accident analyses, engineered safety features, technical specifications).

SHINE PSAR Table 4b.4-1, “Estimated RPF Special Nuclear Material Inventory,” (non-public), specifies the chemical form, physical form, and inventory in pounds and kilograms. This information is not public because it is security-related information and withheld from public disclosure in accordance with 10 CFR 2.390, “Public inspections, exemptions, requests for withholding.” Tables 4b.4-6 through 4b.4-11 list the physical and chemical properties of the recycled target solution, spent target solution, UREX feed, TDN feed, UREX raffinate, and TDN product.

SHINE PSAR Section 4b.4.1 presents a summary description of the processes. Figures 4b.4-1 (proprietary), “Uranyl Nitrate Preparation (UNP) Process Flow Diagram,” 4b.4-2, “Uranium Extraction (UREX) Process Flow Diagram,” and 4b.4-3, “Thermal Denitration (TDN) Process Flow Diagram,” present process flow diagrams of the uranyl nitrate preparation, uranium extraction, and TDN processes, respectively. This information includes data on expected levels of radioactivity, broken down by radionuclide (particularly volatile and long-lived fission products and transuranic elements). The radionuclide inventory is projected with decay time and tabulated at various times throughout the process. The description identifies points in the process where major separations are performed and describes the pathways of the separated radionuclides and other constituents.

SHINE PSAR Section 4b.4.1, along with Figures 4b.3-1, “Molybdenum Extraction Process Flow Diagram,” through 4b.4-7, “Uranium Metal/Oxide Storage Rack Assembly,” provide a clear description of the process systems and components to allow a good understanding that the facility can be operated safely within regulatory limits. The processing components are compatible with the process material contained to withstand the effects of corrosion and radiation. The processing system is designed to manage fission-product and radiolysis gases that evolve in the process.

SHINE PSAR Section 4b.4.1.3, “Criticality Control Features,” states that the UNCS prevents inadvertent criticality through the inherently-safe design of equipment that handles the irradiated SNM. A detailed description of the Criticality Safety Program is provided in SHINE PSAR Section 6b.3, “Nuclear Criticality Control.”

SHINE PSAR Section 4b.4.1.2.2, “Hazardous Material,” and Table 4b.4-12, “UNCS Hazardous Chemicals Inventory,” identify hazardous chemicals that are used in the UNCS process. SHINE will have chemical inventory controls, including separation of chemicals based on the potential for exothermic reactions. These controls, in addition to procedures controlling the processing of irradiated SNM, will include measures to prevent accidents. These procedures and controls will be described in the FSAR. All of the essential physical and operational features of the irradiated SNM processing system that are required to prevent the release of radioactive

material and to maintain radiation levels below applicable radiation exposure limits prescribed in 10 CFR Part 20, for the protection of the staff and the public, will be identified and included in the technical specifications in SHINE FSAR Chapter 14.

On the basis of its review, the staff determined that the process descriptions in SHINE PSAR Section 4b.4.1, together with the included tables and figures, provide a detailed account of the SNM in process along with fission-product radioactivity. The process descriptions for the uranyl nitrate preparation, UREX, and TDN processes are sufficient to provide a clear understanding that these operations can be conducted safely in the RPF. The staff determined that the UNCS processing facilities and apparatus have been described in sufficient detail to provide confidence that the SNM and byproduct material can be controlled throughout the process so that the health and safety of the public will be protected. The staff determined that the criticality control measures provided are consistent with the double-contingency principal, and the UNCS processing facility provides suitable defense-in-depth for the contained processes.

Based on the information provided in Section 4b.4.1 of the SHINE PSAR, the staff finds that the description of SHINE RPF irradiated SNM processing and storage meets the acceptance criteria of ISG Augmenting NUREG-1537 for the issuance of a construction permit in accordance with 10 CFR 50.35.

4b.4.5 Processing of Unirradiated Special Nuclear Material

The staff evaluated the sufficiency of the SHINE RPF unirradiated SNM processing and storage, as described in SHINE PSAR Section 4b.4.2, “Processing of Unirradiated Special Nuclear Material,” using the guidance and acceptance criteria from Section 4b.4.2, “Processing of Unirradiated Special Nuclear Material,” of the ISG Augmenting NUREG-1537, Parts 1 and 2.

Consistent with the review procedures of Section 4b.4.2 of the ISG Augmenting NUREG-1537, Part 2, the staff considered whether the information provided a clear understanding of the processes and is consistent with the information in other sections of the PSAR (e.g., accident analyses, engineered safety features, technical specifications).

SHINE PSAR Section 4b.4.2 states that unirradiated SNM will be received in the form of low enriched uranium metal. Shipments of SNM will be received at the facility in solid form from a U.S. Department of Energy supplier. The shipments will consist of uranium metal enriched to 19.75 ± 0.2 percent U-235. The SNM will be manually transported in approved transport containers and stored criticality-safe in those containers consistent with packaging limitations for use. The approved transport container is an NRC-licensed Type B shipping package. The SNM will be manually transferred to the uranium metal receipt area and removed from the transport containers and stored in uranium metal storage cans in criticality-safe configuration within the uranium metal storage rack. During the receipt process, the uranium metal receipt inspections will be performed. The uranium metal will be dissolved in nitric acid within the uranium metal dissolution tank (1-TSPS-02T) to provide makeup solution for uranium losses within the process. Once dissolution is complete, the uranyl nitrate solution will be transferred to the recycle uranyl nitrate hold tank (1-UNCS-06T) for further processing and conversion to uranium oxide by the thermal denitrator (1-UNCS-08T). The uranium oxide produced from the dissolution of unirradiated uranium metal will be stored in uranium oxide storage cans in criticality-safe configuration within the uranium oxide storage rack in the uranium oxide storage area. Unirradiated SNM in the form of uranium oxide may be received for initial startup and recharging and will be stored in uranium oxide storage cans in criticality-safe configuration

within the uranium oxide storage rack in the uranium oxide storage area. Uranium oxide will be stored for future production of uranyl sulfate target solution.

SHINE PSAR Sections 4b.4.2.2, “Uranium Metal Receipt,” through 4b.4.2.5, “Uranium Oxide Storage,” describe the operations involving SNM before it is used as target solution in the IF. The process descriptions include detailed procedures used in each operation, including a description of the quantity, physical form and chemical form of the SNM involved in each operation, and enough detail to enable development and analysis of potential accident sequences in SHINE PSAR Chapter 13, “Accident Analysis.”

SHINE PSAR Section 4b.4.2.6, “Unirradiated SNM Related Equipment,” describes process equipment associated with processing unirradiated SNM. System components are criticality-safe by design. The target solution hold tank glovebox, uranium receipt ventilation hood, and TDN interface glovebox will be designed and fabricated consistent with American Glovebox Society code AGS-G00-2007, “Guideline for Gloveboxes,” 2007. Nominal sizes and specifications of tanks, uranium metal storage rack, uranium oxide storage rack, uranium metal storage can, and uranium oxide storage can are provided in the proprietary version of SHINE PSAR Chapter 4.

All of the essential physical and operational features of the unirradiated SNM processing system that are required to prevent the release of radioactive material and to maintain radiation levels below applicable radiation exposure limits prescribed in 10 CFR Part 20, for the protection of facility staff and the public, will be identified and included in the technical specifications in SHINE FSAR Chapter 14.

On the basis of its review, the staff determined that process descriptions in SHINE PSAR Section 4b.4 provide a detailed account of the SNM in process. Each operation with SNM in receipt, transport, storage and preparation for use is described in sufficient detail to show that there is reasonable assurance that these operations can be conducted safely. The storage, transport and processing facilities, and apparatus have been described in sufficient detail to provide confidence that the SNM can be controlled throughout the process so that the health and safety of the public will be protected. The criticality control measures provided are consistent with a double-contingency principal and the processing facility provides suitable defense-in-depth for the contained processes.

Based on the information provided in Section 4b.4.2 of the SHINE PSAR, the staff finds that the summary description of SHINE RPF unirradiated SNM processing and storage meets the applicable regulatory requirements and acceptance criteria of the ISG Augmenting NUREG-1537 for the issuance of a construction permit in accordance with 10 CFR 50.35.

4b.5 Summary and Conclusions

The staff evaluated the descriptions and discussions of SHINE’s RPF, as described in SHINE PSAR Section 4b, and finds that the preliminary design of SHINE’s RPF, including the principal design criteria, design bases, and information relative to materials of construction and general arrangements, provides reasonable assurance that the final design will conform to the design basis and meets all applicable regulatory requirements and acceptance criteria in or referenced in the ISG Augmenting NUREG-1537.

On the basis of these findings, the staff has made the following conclusions for the issuance of a construction permit in accordance with 10 CFR 50.35 and 50.40:

(1) SHINE has described the proposed design of the IU, including, but not limited to, the principal architectural and engineering criteria for the design, and has identified the major features or components incorporated therein for the protection of the health and safety of the public.

(2) Further technical or design information required to complete the safety analysis of the IU may be reasonably left for later consideration in the FSAR.

(3) There is reasonable assurance that, taking into consideration the site criteria contained in 10 CFR Part 100, the proposed facility can be constructed and operated at the proposed location without undue risk to the health and safety of the public.

(4) There is reasonable assurance that: (i) the construction of the SHINE facility will not endanger the health and safety of the public, and (ii) construction activities can be conducted in compliance with the Commission's regulations.

(5) The issuance of a permit for the construction of the facility would not be inimical to the common defense and security or to the health and safety of the public.

5.0 COOLING SYSTEMS

The principal purpose of the cooling systems is to safely remove fission and decay heat from the target solution and dissipate it to the environment under normal and accident conditions. Cooling systems, including auxiliary and subsystems that use and contribute to the heat load of the primary or secondary cooling systems, should be shown to safely remove and transfer heat to the environment from all significant heat sources identified in the SHINE Medical Technologies, Inc. (SHINE or the applicant) Preliminary Safety Analysis Report (PSAR). The design of the cooling systems is based on interdependent parameters, including thermal power level, type and form of special nuclear material, neutronic physics, and radiation shielding.

This chapter of the SHINE construction permit safety evaluation report (SER) describes the review and evaluation of the U.S. Nuclear Regulatory Commission (NRC) staff (the staff) of the preliminary design of the SHINE irradiation facility (IF) and radioisotope production facility (RPF) cooling systems as presented in Chapter 5, "Cooling Systems," of the SHINE PSAR, as supplemented by the applicant's responses to requests for additional information (RAIs).

5a Irradiation Unit Cooling Systems

SER Section 5a, "Irradiation Unit Cooling Systems," provides an evaluation of the preliminary design of SHINE's irradiation unit (IU) cooling systems, as presented in SHINE PSAR Section 5a2, "Irradiation Unit Cooling Systems," within which, SHINE describes the primary cooling system, secondary cooling system, primary coolant cleanup, primary coolant makeup water system, nitrogen-16 (N-16) control, and auxiliary systems using primary coolant.

5a.1 Areas of Review

SHINE PSAR Sections 5b, "Radioisotope Production Facility Cooling Systems," and 5a2.3, "Secondary Cooling System," describe the radioisotope process facility cooling system (RPCS), which serves as a secondary cooling system for the IUs and provides cooling to the RPF. Therefore, the areas of review related to the RPCS presented in this section are applicable to both the SHINE IUs and RPF.

The staff reviewed PSAR Section 5a, "Irradiation Unit Cooling Systems," against applicable regulatory requirements using appropriate regulatory guidance and standards to assess the sufficiency of the preliminary design of the SHINE IU cooling systems. As part of this review, the staff evaluated descriptions and discussions of SHINE's IU cooling systems, with special attention to design and operating characteristics, unusual or novel design features, and principal safety considerations. The preliminary design of SHINE's IU cooling systems was evaluated to ensure the sufficiency of principal design criteria, design bases, and information relative to materials of construction, general arrangement, and approximate dimensions, sufficient to provide reasonable assurance that the final design will conform to the design bases. In addition, the staff reviewed SHINE's identification and justification for the selection of those variables, conditions, or other items that are determined to be probable subjects of technical specifications for the facility, with special attention given to those items that may significantly influence the final design. The staff also considered the preliminary analysis and evaluation of the design and performance of the structures, systems, and components (SSCs) of the SHINE facility, including those SSCs shared by both the IF and RPF, with the objective of assessing the risk to public health and safety resulting from operation of the facility.

Areas of review for this section included IU primary and secondary cooling systems, primary coolant cleanup and makeup water systems, N-16 control, and auxiliary systems using primary coolant. Within these review areas, the staff assessed the following capabilities of SHINE's IU cooling systems:

- The capability of the primary coolant system to remove fission and decay heat during normal operation, possible accident conditions and shut down, and transfer such heat to the secondary coolant system.
- The capability of the primary coolant system to provide shielding.
- The capability of the secondary coolant system to provide controlled heat dissipation to the environment.
- The capability of the primary coolant cleanup system to maintain high water quality to limit corrosion of essential components and the concentrations of particulates and dissolved contaminants that might become radioactive by neutron irradiation and to maintain high transparency of the water for observation of submerged operational and utilization components.
- The capability of the primary coolant makeup water system to replenish coolant, as necessary, to maintain operability.
- The capability of the primary coolant system to prevent uncontrolled leakage or discharge of contaminated coolant to the unrestricted environment.
- The capability of the primary coolant system to cool auxiliary systems, as required.

5a.2 Summary of Application

As stated above and described in SHINE PSAR Sections 5b and 5a2.3, the RPCS serves as a secondary cooling system for the IUs and provides cooling to the RPF. Therefore, the summary provided below applies to both the IF and RPF.

The IU cooling systems include the primary cooling system and secondary cooling system. The primary cooling system comprises the primary closed-loop cooling system (PCLS) and light-water pool system (LWPS). The PCLS and LWPS provide the heat removal to the IU equipment that is submerged within the light water pool. There are eight IUs and each of the IUs includes a PCLS and LWPS. The secondary cooling system is referred to as the RPCS. The RPCS removes heat from the LWPS/PCLS and transfers it to the facility chilled water supply and distribution system (FCHS). The RPCS is a closed loop system that provides cooling water to all of the process areas within the radiologically controlled area (RCA). The thermal partitions between the LWPS/PCLS and RPCS cooling systems are the heat exchangers at the system interfaces. The primary coolant cleanup loops provide treatment of the PCLS and LWPS coolant to meet water quality limits. The light water pool and primary closed loop cooling make-up system (MUPS) provides makeup water to the PCLS and LWPS cooling loops. In addition to providing secondary cooling function for the IF, the RPCS also provides cooling to the RPF. There is no independent N-16 control system.

SHINE PSAR Section 5a provides the preliminary design of the SHINE IU cooling systems, including physical descriptions, design bases, process functions and operation, safety functions, interfaces, and probable subjects of technical specifications. There is no independent N-16 control system and IU auxiliary systems are not cooled by the primary coolant system. The preliminary design of the SHINE IU cooling systems is supported by the following PSAR figures, which show flow paths between system components:

- Figure 5a2.1-1, "Cooling Systems Heat Flow Pathway Diagram."
- Figure 5a2.2-1, "LWPS Process Flow Diagram."
- Figure 5a2.2-2, "PCLS Process Flow Diagram."
- Figure 5a2.4-1, "Primary Coolant Cleanup Loop Flow Diagram."

Additionally, the following PSAR tables describe specifications, components, and interfaces of the IU cooling systems. The specifications provide nominal values for different parameters, and the component tables provide descriptions and the codes or standards to which the components are designed.

- Table 5a2.2-1, "PCLS Specifications."
- Table 5a2.2-2, "LWPS Specifications."
- Table 5a2.2-3, "PCLS and LWPS Components."
- Table 5a2.2-4, "PCLS and LWPS System Interfaces."
- Table 5a2.3-1, "RPCS Specifications."
- Table 5a2.3-2, "RPCS Components."
- Table 5a2.3-3, "RPCS Interfaces."
- Table 5a2.5-1, "MUPS Specifications."

5a.3 Regulatory Basis and Acceptance Criteria

As previously stated and described in SHINE PSAR Sections 5b and 5a2.3, the RPCS serves as a secondary cooling system for the IUs and provides cooling to the RPF. Therefore, the regulatory basis and acceptance criteria provided below apply to both the SHINE IF and RPF.

The staff reviewed SHINE PSAR Section 5a against applicable regulatory requirements, using appropriate regulatory guidance and standards, to assess the sufficiency of the preliminary design and performance of SHINE's IU cooling systems for the issuance of a construction permit. In accordance with paragraph (a) of Title 10 of the *Code of Federal Regulations* (10 CFR) 50.35, "Issuance of construction permits," a construction permit authorizing SHINE to proceed with construction may be issued once the following findings have been made:

(1) SHINE has described the proposed design of the facility, including, but not limited to, the principal architectural and engineering criteria for the design, and has identified the major features or components incorporated therein for the protection of the health and safety of the public.

(2) Such further technical or design information as may be required to complete the safety analysis, and which can reasonably be left for later consideration, will be supplied in the final safety analysis report (FSAR).

(3) Safety features or components, if any, which require research and development have been described by SHINE and a research and development program will be conducted

that is reasonably designed to resolve any safety questions associated with such features or components.

(4) On the basis of the foregoing, there is reasonable assurance that: (i) such safety questions will be satisfactorily resolved at or before the latest date stated in the application for completion of construction of the proposed facility, and (ii) taking into consideration the site criteria contained in 10 CFR Part 100, "Reactor Site Criteria," the proposed facility can be constructed and operated at the proposed location without undue risk to the health and safety of the public.

With respect to the last of these findings, the staff notes that the requirements of 10 CFR Part 100 are specific to nuclear power reactors, and therefore not applicable to the SHINE facility. However, the staff evaluated SHINE's site specific conditions using site criteria similar to 10 CFR Part 100, by using the guidance in NUREG-1537, Part 1, "Guidelines for Preparing and Reviewing Applications for the Licensing of Non-Power Reactors, Format and Content," issued February 1996 (Reference 4) and Part 2, "Guidelines for Preparing and Reviewing Applications for the Licensing of Non-Power Reactors, Standard Review Plan and Acceptance Criteria," issued February 1996 (Reference 5). The staff's review evaluated the geography and demography of the site; nearby industrial, transportation, and military facilities; site meteorology; site hydrology; and site geology, seismology, and geotechnical engineering to ensure that issuance of the construction permit will not be inimical to public health and safety.

The staff's evaluation of the preliminary design of SHINE's IU cooling systems does not constitute approval of the safety of any design feature or specification. Such approval will be made following the evaluation of the final design of SHINE's IU cooling systems, as described in the FSAR, as part of SHINE's operating license application.

5a.3.1 Applicable Regulatory Requirements

The applicable regulatory requirements for the evaluation of SHINE's IU cooling systems are as follows:

- 10 CFR 50.34, "Contents of applications; technical information," paragraph (a), "Preliminary safety analysis report."
- 10 CFR 50.40, "Common Standards."
- 10 CFR 20.1201, "Occupational dose limits for adults."
- 10 CFR 20.1301, "Dose limits for individual members of the public."

5a.3.2 Regulatory Guidance and Acceptance Criteria

In applying guidance and acceptance criteria, the staff used its judgment as to which acceptance criteria were relevant to SHINE's proposed facility, as much of this guidance was originally developed for nuclear reactors. Given the similarities in SHINE's proposed facility and non-power research reactors, the staff used established guidance documents and the Commission's regulations to determine the acceptance criteria for demonstrating compliance with 10 CFR regulatory requirements. For example, the staff used the following:

- NUREG-1537, Part 1, "Guidelines for Preparing and Reviewing Applications for the Licensing of Non-Power Reactors, Format and Content," issued February 1996 (Reference 4).

- NUREG-1537, Part 2, "Guidelines for Preparing and Reviewing Applications for the Licensing of Non-Power Reactors, Standard Review Plan and Acceptance Criteria," issued February 1996 (Reference 5).

- "Final Interim Staff Guidance [ISG] Augmenting NUREG-1537, Part 1, 'Guidelines for Preparing and Reviewing Applications for the Licensing of Non-Power Reactors: Format and Content,' for Licensing Radioisotope Production Facilities and Aqueous Homogeneous Reactors," dated October 17, 2012 (Reference 6).

- "Final Interim Staff Guidance Augmenting NUREG-1537, Part 2, 'Guidelines for Preparing and Reviewing Applications for the Licensing of Non-Power Reactors: Standard Review Plan and Acceptance Criteria,' for Licensing Radioisotope Production Facilities and Aqueous Homogeneous Reactors," dated October 17, 2012 (Reference 7).

As stated in the ISG Augmenting NUREG-1537, the staff determined that certain guidance originally developed for heterogeneous non-power research and test reactors is applicable to aqueous homogenous facilities and production facilities. SHINE used this guidance to inform the design of its facility and prepare its PSAR. The staff's use of reactor-based guidance in its evaluation of the SHINE PSAR is consistent with the ISG Augmenting NUREG-1537.

As appropriate, additional guidance (e.g., NRC regulatory guides, Institute of Electrical and Electronics Engineers [IEEE] standards, American National Standards Institute/American Nuclear Society [ANSI/ANS] standards) has been used in the staff's review of SHINE's PSAR. The use of additional guidance is based on the technical judgment of the reviewer, as well as references in NUREG-1537, Parts 1 and 2; the ISG Augmenting NUREG-1537, Parts 1 and 2; and the SHINE PSAR. Additional guidance documents used to evaluate SHINE's PSAR are provided as references in Appendix B of this SER.

5a.4 Review Procedures, Technical Evaluation, and Evaluation Findings

As described in SHINE PSAR Sections 5b and 5a2.3, the RPCS serves as a secondary cooling system for the IUs and provides cooling to the RPF. The technical evaluation of this system provided below in Section 5a.4.3, "Secondary Cooling System," applies to both the SHINE IF and RPF. The staff's review of the RPCS considers the interface of this system between the IF and RPF.

The staff evaluated the technical information presented in SHINE PSAR Section 5a, as supplemented by the applicant's responses to RAIs, to assess the sufficiency of the preliminary design and performance of SHINE's IU cooling systems for the issuance of a construction permit, in accordance with 10 CFR 50.35(a). Additionally, the staff reviewed portions of sections throughout the PSAR that dealt with SSCs requiring cooling from the RPCS. The sufficiency of the preliminary design and performance of SHINE's IU cooling systems is determined by ensuring the design and performance meet applicable regulatory requirements, guidance, and acceptance criteria, as discussed in Section 5a.3, "Regulatory Basis and Acceptance Criteria," of this SER. A summary of the staff's findings is in SER Section 5a.5, "Summary and Conclusion."

For the purposes of issuing a construction permit, the preliminary design of the SHINE cooling systems may be adequately described at a functional or conceptual level. The staff evaluated the sufficiency of the preliminary design of the SHINE cooling systems based on the applicant's design methodology and ability to provide reasonable assurance that the final design will conform to the design bases with adequate margin for safety. As such, the staff's evaluation of the preliminary design of SHINE's cooling systems does not constitute approval of the safety of any design feature or specification. Such approval will be made following the evaluation of the final design of SHINE's cooling systems, as described in the FSAR, as part of SHINE's operating license application.

5a.4.1 Summary Description

The staff evaluated the sufficiency of SHINE's summary description of its IU cooling systems, as described in SHINE PSAR Section 5a2.1, "Summary Description," using the guidance and acceptance criteria from Section 5.1, "Summary Description," of NUREG-1537, Parts 1 and 2, and Section 5a2.1, "Summary Description," of the ISG Augmenting NUREG-1537, Parts 1 and 2.

As stated, in part, in Section 5a2.1 of the ISG Augmenting NUREG-1537, Part 2, the summary description of the cooling systems should include the type of coolant, type of cooling system, type of coolant flow in the primary and secondary cooling systems and the method of heat disposal to the environment, capability to provide sufficient heat removal for continuous operation at full licensed power, and any special or facility-unique features. SHINE PSAR Section 5a2.1 provides descriptions of the primary and secondary cooling systems, primary coolant cleanup and makeup water systems, and N-16 control.

Based on the information provided in Section 5a2.1 of the SHINE PSAR, the staff finds that the summary description of the SHINE IU cooling systems meets the applicable regulatory requirements and acceptance criteria of NUREG-1537 and ISG Augmenting NUREG-1537 for the issuance of a construction permit in accordance with 10 CFR 50.35.

5a.4.2 Primary Cooling System

The staff evaluated the sufficiency of the preliminary design of SHINE's primary cooling system, as described in SHINE PSAR Section 5a2.2, "Primary Cooling System," in part, by reviewing the design basis, PCLS process functions, system process and safety functions, probable subjects of technical specifications, primary cooling system components and interfaces, PCLS cooling functions and operation, LWPS cooling functions and operation, instrumentation and sampling, secondary cooling system interaction, and radiation exposure protection using the guidance and acceptance criteria from Section 5.2, "Primary Coolant System," of NUREG-1537, Parts 1 and 2, and Section 5a2.2, "Primary Cooling System," of the ISG Augmenting NUREG-1537, Parts 1 and 2.

Consistent with the review procedures of the ISG Augmenting NUREG-1537, Part 2, Section 5a2.2, the staff compared the preliminary design and operating characteristics of the primary cooling system with the bases for the design, as presented in SHINE PSAR Section 5a2.2 and other relevant chapters of the PSAR.

The ISG Augmenting NUREG-1537, Part 1, Section 5a2, "Aqueous Homogeneous Reactor [AHR] Cooling System," states, in part, that "the applicant should give the design bases, descriptions, and functional analyses of the AHR cooling systems. The principal purpose of the

cooling systems is to safely remove the fission heat and decay heat…and dissipate it to the environment." As described in SHINE PSAR Section 5a2.2, each PCLS is designed to remove heat from each IU during full-power operation. The LWPS is also designed to remove heat from each IU during full-power operation. The light water pool is designed to passively remove decay waste heat (post-IU shut down) during design-basis accidents that result in a loss of PCLS and LWPS active cooling. A small amount of heat is also removed by the target solution vessel off-gas system. Based on the total heat load of the facility during normal operation and the thermal inertia of the light water pool, the staff finds the passive removal of decay heat sufficient. As such, active heat removal from the IUs is not required for emergency cooling.

The applicant stated that the RPCS provides cooling to both the IUs and the RPF and shutdown of the RPCS may leave some facility components without access to the passive cooling provided by the light water pools. For example, after shutdown of the IUs, hydrogen production will continue for some time at reduced rates and the off-gas condensers may require continued cooling. The applicant did not provide an analysis of this operational scenario and other scenarios that may require additional cooling. However, the NRC staff determined that since the RPCS does not support safety-related SSCs, the analysis can reasonably be deferred for consideration of a final design presented in the FSAR.

SHINE PSAR Section 5a2.2 provides a discussion of leak detection and allowable leakage limits, and specifies the inclusion of schematic and flow diagrams of the system, showing such essential components as the heat source, heat sink, pumps, piping, valves, control and safety instrumentation, interlocks, and other related subsystems.

In SHINE PSAR Section 5a2.2.9, "Secondary Cooling System Interaction," Section 5a2.3.5, "RPCS Cooling Functions and Operation," and Section 5a2.3.9, "Instrumentation and Control," pressure, flow, temperature, conductivity, and radiation detection instrumentation are discussed, with pressure being the apparent measurement used to identify system leaks. The staff concluded that SHINE should provide additional information to enable the staff to evaluate the adequacy of pressure measurement to identify system leaks and to evaluate instrumentation for cooling system functions. Requested information addresses the acceptance criteria of the ISG Augmenting NUREG-1537, Part 2, Section 5a2.2, "Primary Cooling System," related to the sufficiency of cooling system instrumentation, sensors, and control systems and demonstrate the adequacy of the design basis of the SHINE primary cooling system.

Therefore, in RAI 5a2.2-1 (Reference 14), staff asked the applicant to discuss the ability of pressure measurements to identify the presence of small leaks and address how the location of leaks would be determined.

In response to RAI 5a2.2-1 (Reference 20), the applicant stated that there were no plans to use pressure measurements to detect the presence of small leaks in the RPCS. The applicant stated that the pressure in the RPCS is greater than the pressure in the PCLS and LWPS to prevent the transfer of contaminated liquid in the event of a heat exchanger leak and the pressure measurement instrumentation on the PCLS, LWPS, and RPCS ensures that this function is maintained. An alarm will notify the operators if pressures for the PCLS, LWPS, or RPCS are outside of their allowable ranges.

SHINE stated that the location of small leaks out of the RPCS to the environment will be detected through one of the following methods:

- Rise in the level in the expansion tank (PCLS) or pool (LWPS) for that system over time.

- Periodic sampling and analysis for contaminants is performed on the PCLS and LWPS. The presence of contaminants (such as corrosion inhibitor agents from the RPCS) implies possible leakage and will be investigated.

- Visual detection during building walk downs of accessible areas.

The applicant stated that these three methods also assist in identifying a specific leaking heat exchanger or component. The staff finds this response addresses the acceptance criteria of the ISG Augmenting NUREG-1537, Part 2, Section 5a2.2, and demonstrates an adequate design basis for a preliminary design. The staff will confirm that the final design conforms to this design basis during the evaluation of SHINE's FSAR.

In RAI 5a2.2-2 (Reference 14), the staff requested additional detail on the instrumentation for the cooling system functions to determine whether the intended functions are performed. This information was needed to address the acceptance criteria of the ISG Augmenting NUREG-1537, Part 2, Section 5a2.2, "Primary Cooling System," related to the sufficiency of cooling system instrumentation, sensors, and control systems and demonstrate the adequacy of the design basis of the SHINE primary cooling system.

In response to RAI 5a2.2-2 (Reference 20), the applicant committed to install adequate instrumentation to identify and quantify leakage rates, including very small leaks. Instrumentation will have the capability to identify leak locations as they relate to allowable leakage limits and the safety functions of the systems. The details on the type and accuracy of the instrumentation will be provided in the FSAR. The staff finds this response addresses the acceptance criteria of the ISG Augmenting NUREG-1537, Part 2, Section 5a2.2, and demonstrates an adequate design basis for a preliminary design. The staff will confirm that the final design conforms to this design basis during the evaluation of SHINE's FSAR.

SHINE PSAR Section 5a.2.2.2, "PCLS Process Functions," indicates that water quality will be maintained to reduce corrosion and scaling, but this section does not indicate how this will be done. The staff determined that additional information was needed to evaluate the impact of potentially toxic additives used to maintain water quality on corrosion and scaling. Chemicals are commonly added to nuclear plant water systems to adjust nuclear reactivity (e.g., boric acid), to control pH (e.g., lithium hydroxide, ammonia/amines), to remove oxygen (e.g., hydrazine), or as a biocide (e.g., chlorine).

Therefore, in RAI 5a2.2-3 (Reference 14), the staff requested that the applicant provide a list of all potentially toxic chemicals expected to be on the SHINE site for water quality control or for other purposes, including locations and quantities. This information is necessary to demonstrate the adequacy of the design basis of the SHINE primary cooling system and satisfy the acceptance criteria of the ISG augmenting NUREG-1537, Part 2, Section 5a2.2, which states, in part, that "[t]he primary coolant should provide a chemical environment that limits corrosion of the primary coolant barrier, control and safety rod surfaces, reactor vessels or pools, and other essential components."

In response to RAI 5a2.2-3 (Reference 20), the applicant stated that chemical additives will not be used in the primary coolant systems, the PCLS, or the LWPS. Filters and ion exchange resins will be used to remove contaminants and to maintain water quality parameters. As described in a letter dated October 4, 2013 (Reference 31), SHINE stated that the potentially toxic chemicals used to maintain water quality in the secondary water systems may include non-phosphate buffers (e.g., lithium hydroxide, boric acid, sodium sulfite, sodium lauroyl

sarcosinate, or others to be determined during detailed design). The quantities of chemicals needed for the secondary water systems are expected to be small (i.e., less than 5 pounds), and will be stored in appropriate chemical storage areas, segregated from incompatible chemicals, consistent with Safety Data Sheets. The chemical storage areas are shown in PSAR Figure 1.3-2, "Production Building Floor Plans Preliminary Arrangement." Toxic chemicals used for other purposes are described in PSAR Section 13b.3.2.2, "Chemical Source Term Analysis." Those chemicals and amounts are provided in PSAR Table 13b.3-1, "Bounding Inventory [pounds] (lbs.) of Significant Process Chemicals."

The staff finds this response satisfies the acceptance criteria of the ISG Augmenting NUREG-1537, Part 2, Section 5a2.2 and demonstrates an adequate design basis for a preliminary design. The staff will confirm that the final design conforms to design bases during the evaluation of SHINE's FSAR.

On the basis of its review, the staff has determined that the level of detail provided on SHINE's primary cooling system demonstrates an adequate design basis for a preliminary design and satisfies the applicable acceptance criteria of NUREG-1537, Part 2, Section 5a2.2, allowing the staff to make the following findings: (1) the primary cooling system and components provide reasonable assurance of the maintenance of the system boundary integrity, (2) the system to remove fission heat from the IUs is sufficient, (3) the system has been designed to avoid a loss-of-coolant that would lead to system boundary failure, (4) appropriate passive cooling has been incorporated into the design, (5) the chemical quality of the primary coolant will limit corrosion, and (6) systems are present to control hydrogen concentrations.

Therefore, the staff finds that the preliminary design of the SHINE primary coolant system, as described in SHINE PSAR Section 5a2.2 and supplemented by the applicant's responses to RAIs, is sufficient and meets the applicable regulatory requirements and guidance for the issuance of a construction permit in accordance with 10 CFR 50.35 and 50.40. Further technical or design information required to complete the safety analysis may reasonably be left for later consideration. The staff will confirm that all aspects of the final design conform to the design basis during the evaluation of SHINE's FSAR.

5a.4.3 Secondary Cooling System

The staff evaluated the sufficiency of the preliminary design of SHINE's secondary cooling system (RPCS), as described in SHINE PSAR Section 5a2.3, in part, by reviewing the design basis, process functions, RPCS components and interfaces, RPCS cooling functions and operation, cooling control, loss of cooling, component functions and locations; instrument and control; and other uses of the RPCS using the guidance and acceptance criteria from Section 5.3, "Secondary Coolant System," of NUREG-1537, Parts 1 and 2, and 5a2.3, "Secondary Cooling System," of the ISG Augmenting NUREG-1537, Parts 1 and 2.

Consistent with the review procedures of the ISG Augmenting NUREG-1537, Part 2, Section 5a2.3, the staff verified that all IU conditions requiring heat transfer from the PCLS to the RPCS have been discussed. The SHINE PSAR states that the RPCS is a non-safety-related system and is not needed in the event of an accident.

On the basis of its review, the staff has determined that the level of detail provided on the RPCS demonstrates an adequate design basis for a preliminary design and satisfies the applicable acceptance criteria of NUREG-1537, Part 2, Section 5a2.3, allowing the staff to make the following findings: (1) the design features of the RPCS will allow the transfer of the necessary

heat from the primary cooling system, and (2) the location and design specifications of the RPCS ensure that malfunctions will not lead to IU or RPF damage.

Therefore, the staff finds that the preliminary design of the SHINE secondary cooling system, as described in SHINE PSAR Section 5a2.3, is sufficient and meets the applicable regulatory requirements and guidance for the issuance of a construction permit in accordance with 10 CFR 50.35. The staff will confirm that the final design conforms to this design basis during the evaluation of SHINE's FSAR.

5a.4.4 Primary Coolant Cleanup

Section 5a2.4, "Primary Coolant Cleanup," identifies the process function and flows, and the cleanup loop components, control and instrumentation. The staff evaluated the sufficiency of the preliminary design of SHINE's primary coolant cleanup system, as described in SHINE PSAR Section 5a2.4 by reviewing the design basis, process functions, process flow, system specifications, cleanup loop control and instrumentation, cleanup loop components, and maintenance and coolant testing of SHINE's primary coolant cleanup system using the guidance and acceptance criteria from Section 5.4, "Primary Coolant Cleanup System," of NUREG-1537, Parts 1 and 2, and Section 5a2.4, "Primary Coolant Cleanup System," of the ISG Augmenting NUREG-1537, Parts 1 and 2.

Consistent with the review procedures of the ISG Augmenting NUREG-1537, Part 2, Section 5a2.4, the staff compared the design bases for the primary coolant water quality with the design bases by which the primary coolant cleanup system will achieve its requirements. The SHINE PSAR states that primary coolant cleanup system is part of the PCLS and light-water pool system and is not an independent system.

On the basis of its review, the staff has determined that the level of detail provided on the RPCS demonstrates an adequate design basis for a preliminary design and satisfies the applicable acceptance criteria of NUREG-1537, Part 2, Section 5a2.4, allowing the staff to make the following findings: (1) the design bases and functional descriptions of the primary water cleanup system provide reasonable assurance that the required water quality can be achieved; and (2) the system has been designed in accordance with the requirements of 10 CFR Part 20, "Standards for Protection Against Radiation," and as low as is reasonably achievable (ALARA) program guidelines.

Therefore, the staff finds that the preliminary design of the SHINE IU primary coolant cleanup, as described in SHINE PSAR Section 5a2.4, is sufficient and meets the applicable regulatory requirements and guidance for the issuance of a construction permit in accordance with 10 CFR 50.35. The staff will confirm that the final design conforms to this design basis during the evaluation of SHINE's FSAR.

5a.4.5 Primary Coolant Makeup Water System

The staff evaluated the sufficiency of the preliminary design of SHINE's MUPS, as described in SHINE PSAR Section 5a2.5, "Primary Coolant Makeup Water System," in part, by reviewing design basis, process functions, process flow, design specifications, MUPS control and instrumentation, and MUPS components of SHINE's primary coolant makeup water system using the guidance and acceptance criteria from Section 5.5, "Primary Coolant Makeup Water System," of NUREG-1537, Parts 1 and 2, and Section 5a2.5, "Primary Coolant Makeup Water System," of the ISG Augmenting NUREG-1537, Parts 1 and 2.

Consistent with the review procedures of the ISG Augmenting NUREG-1537, Part 2, Section 5a2.5, the staff compared the design bases and functional requirements for replenishing primary coolant, including the quantity and quality of water, the activities or functions that remove primary coolant, and the systems or procedures to accomplish water makeup with the acceptance criteria.

On the basis of its review, the staff has determined that the level of detail provided on the MUPS demonstrates an adequate design basis for a preliminary design and satisfies the applicable acceptance criteria of NUREG-1537, Part 2, Section 5a2.5, allowing the staff to make the following relevant findings: (1) The design bases, functional descriptions, and procedures for the MUPS give reasonable assurance that the quantity and quality of water required will be provided; (2) the system is designed to prevent overfilling of the primary cooling system; and (3) the system is designed to prevent contamination.

Therefore, the staff finds that the preliminary design of the SHINE MUPS, as described in Section 5a2.5 of the SHINE PSAR, is sufficient and meets the applicable regulatory requirements and guidance for the issuance of a construction permit in accordance with 10 CFR 50.35. The staff will confirm that the final design conforms to this design basis during the evaluation of SHINE's FSAR.

5a.4.6 Nitrogen-16 Control

The staff evaluated the sufficiency of the preliminary design of SHINE's N-16 control, as described in SHINE PSAR Section 5a2.6, "Nitrogen-16 Control," using the guidance and acceptance criteria of Section 5a2.6, "Nitrogen-16 Control," of the ISG Augmenting NUREG-1537, Parts 1 and 2. As stated in SHINE PSAR Section 5a2.6, "[t]here is no independent N-16 control system. The radiation dose from N-16 is mitigated by the IU cell walls and shielding around the PCLS/LWPS components in the primary cooling enclosures and the administrative controls defined by the radiation protection program."

Consistent with the review procedures of the ISG Augmenting NUREG-1537, Part 2, Section 5a2.6, the staff evaluated the design basis of the systems that control personnel exposures to N-16 to confirm that an independent N-16 control system was not necessary.

On the basis of its review, the staff has determined that the level of detail provided on N-16 control (i.e., proposed administrative controls and the preliminary design of the IU cell walls and shielding around the PCLS/LWPS) demonstrates an adequate design basis for a preliminary design and satisfies the applicable acceptance criteria of NUREG-1537, Part 2, Section 5a2.6. The staff finds that an independent N-16 system is not necessary. However, the design bases

and features of those systems for N-16 control give reasonable assurance that those systems can function as proposed to reduce potential doses to personnel, meet 10 CFR Part 20 requirements, and be consistent with the facility's ALARA program.

Therefore, the staff finds that the proposed administrative controls and preliminary design of the SHINE IU cell walls and shielding, as described in Section 5a2.6 of the SHINE PSAR, is sufficient for N-16 control and meets the applicable regulatory requirements and guidance for the issuance of a construction permit in accordance with 10 CFR 50.35. The staff will confirm that the final design conforms to this design basis during the evaluation of SHINE's FSAR.

5a.4.7 Auxiliary Systems Using Primary Coolant

The staff evaluated the sufficiency of the preliminary design of SHINE's auxiliary systems using primary coolant, as described in SHINE PSAR Section 5a2.7, "Auxiliary Systems Using Primary Coolant," using the guidance and acceptance criteria of Section 5a2.7, "Auxiliary Systems Using Primary Coolant," of the ISG Augmenting NUREG-1537, Parts 1 and 2. As stated in SHINE PSAR Section 5a2.7, "[t]he SHINE facility IU auxiliary systems do not utilize the primary cooling system for cooling duty. Therefore, this section does not apply to the SHINE facility."

Consistent with the review procedures of the ISG Augmenting NUREG-1537, Part 2, Section 5a2.7, the staff verified that no auxiliary systems in which potentially damaging temperature increases or excessive radiation exposures were predicted, relied on cooling or shielding using primary coolant.

On the basis of its review, the staff has determined that, based on the preliminary design of the SHINE auxiliary systems, there are no auxiliary systems that require or utilize primary coolant for cooling duty. Therefore, the staff concluded that Section 5a2.7 of the ISG Augmenting NUREG-1537 does not apply to the SHINE facility. The staff will confirm that the final design maintains the separation of the auxiliary systems from the primary coolant, consistent with the design basis in the PSAR or an additional evaluation will be performed to verify the acceptance criteria in the ISG is met for the auxiliary system using primary coolant.

5a.4.8 Probable Subjects of Technical Specifications

In accordance with 10 CFR 50.34(a)(5), the staff evaluated the sufficiency of the applicant's identification and justification for the selection of those variables, conditions, or other items which are determined to be probable subjects of technical specifications for the SHINE cooling systems, with special attention given to those items which may significantly influence the final design.

SHINE PSAR Section 5a2.2.4, "Technical Specification Operating Parameters," states that "[t]here are no technical specification parameters identified for the PCLS or the LWPS." PSAR Sections 5a2.3.3, "Technical Specification Operating Parameters," and 5a2.4.4, "System Specifications," indicate that there are no technical specification parameters identified for the RPCS, PCLS or the LWPS cleanup, also PSAR Section 5a2.4.4 states that "Tables 5a2.2-1 and 5a2.2-2 [provide] specifications of the primary coolant cleanup system. The specifications in Tables 5a2.2-1 and 5a2.2-2 ensure normal operation of the primary coolant cleanup system without adversely affecting normal operation of other associated systems."

However, the staff notes that SHINE identified potential limiting conditions for operation (LCOs) based on the flow and temperature of the PCLS, as well as the temperature and level of the LWPS in Table 14a2-1, "SHINE Facility Proposed Parameters for Technical Specifications."

Based on the information provided in Sections 5a2.2.4, 5a2.3.3, and 5a2.4.4, as well as Table 14a2-1 of the SHINE PSAR, the staff finds that identification and justification of the proposed LCOs for the PCLS and LWPS is sufficient and meets the applicable regulatory requirements for the issuance of a construction permit in accordance with 10 CFR 50.35. A detailed evaluation of technical specifications, including LCOs and surveillance requirements, will be performed during the review of SHINE's operating license application.

5a.5 Summary and Conclusions

As described in SHINE PSAR Sections 5b and 5a2.3, the RPCS serves as a secondary cooling system for the IUs and provides cooling to the RPF. The summary and conclusions provided below apply to both the IF and RPF.

The staff evaluated descriptions and discussions of SHINE's cooling systems, including probable subjects of technical specifications, as described in SHINE PSAR Section 5a and supplemented by the applicant's responses to RAIs, and finds that the preliminary design of SHINE's cooling systems, including the principal design criteria, design bases, and information relative to materials of construction, general arrangement, and approximate dimensions: (1) provides reasonable assurance that the final design will conform to the design basis, and (2) meets all applicable regulatory requirements and acceptance criteria in or referenced in NUREG-1537 and ISG Augmenting NUREG-1537. The staff further notes that the IUs are designed to operate with a minimal heat load during normal operation, which would promptly lessen by at least an order of magnitude following IU shut down. This, coupled with the absence of long-lived fission product build-up following shut down, indicates that operation of this facility would pose a minimal risk to the health and safety of the public.

On the basis of these findings, the staff has made the following conclusions for the issuance of a construction permit in accordance with 10 CFR 50.35 and 50.40:

(1) SHINE has described the proposed design of the cooling systems, including, but not limited to, the principal architectural and engineering criteria for the design, and has identified the major features or components incorporated therein for the protection of the health and safety of the public.

(2) Further technical or design information required to complete the safety analysis of the cooling systems may reasonably be left for later consideration in the FSAR.

(3) Taking into consideration the site criteria contained in 10 CFR Part 100, the proposed facility can be constructed and operated at the proposed location without undue risk to the health and safety of the public.

(4) There is reasonable assurance: (i) that the construction of the SHINE facility will not endanger the health and safety of the public, and (ii) that construction activities can be conducted in compliance with the Commission's regulations.

(5) The issuance of a permit for the construction of the facility would not be inimical to the common defense and security or to the health and safety of the public.

5b Radioisotope Production Facility Cooling Systems

SER Section 5b, “Radioisotope Production Facility Cooling Systems,” provides an evaluation of the preliminary design of SHINE’s RPF cooling systems as presented in SHINE PSAR Section 5b, “Radioisotope Production Facility Cooling Systems.”

5b.1 Areas of Review

SHINE PSAR Sections 5b and 5a2.3 describe the RPCS, which serves as a secondary cooling system for the IUs and provides cooling to the RPF. Therefore, the areas of review related to the RPCS presented in SER Section 5a.1, “Areas of Review,” are applicable to both the SHINE IUs and RPF.

5b.2 Summary of Application

As stated above and described in SHINE PSAR Sections 5b and 5a2.3, the RPCS serves as a secondary cooling system for the IUs and provides cooling to the RPF. Therefore, the summary provided in SER Section 5a.2, “Summary of Application,” applies to both the IUs and RPF.

5b.3 Regulatory Basis and Acceptance Criteria

As previously stated and described in SHINE PSAR Sections 5b and 5a2.3, the RPCS serves as a secondary cooling system for the IUs and provides cooling to the RPF. Therefore, the regulatory basis and acceptance criteria provided in SER Section 5a.3, “Regulatory Basis and Acceptance Criteria,” apply to both the SHINE IF and RPF.

5b.4 Review Procedures, Technical Evaluation, and Evaluation Findings

As described in SHINE PSAR Sections 5b and 5a2.3, the RPCS serves as a secondary cooling system for the IUs and provides cooling to the RPF. The technical evaluation of this system is provided above in SER Section 5a.4.3, “Secondary Cooling System,” and applies to both the SHINE IF and RPF. The staff’s review of the RPCS considers the interface of this system between the IF and RPF as part of its technical evaluation. Since the RPCS is not considered safety-related, there was no identification of probable subjects of technical specifications for this system.

5b.5 Summary and Conclusions

As described in SHINE PSAR Sections 5b and 5a2.3, the RPCS serves as a secondary cooling system for the IUs and provides cooling to the RPF. The summary and conclusions provided in SER Section 5a.5, “Summary and Conclusions,” apply to both the IF and RPF.

6.0 ENGINEERED SAFETY FEATURES

Engineered safety features (ESFs) are active or passive features designed to mitigate the consequences of accidents and to keep radiological exposures to the public, the facility staff, and the environment within acceptable values at the SHINE Medical Technologies, Inc. (SHINE or the applicant) irradiation facility (IF) and radioisotope production facility (RPF). The concept of ESFs evolved from the defense-in-depth philosophy of multiple layers of design features to prevent or mitigate the release of radioactive materials to the environment during accident conditions. The need for ESFs is determined by SHINE's accident analysis.

This chapter of the SHINE construction permit safety evaluation report (SER) describes the review and evaluation of the U.S. Nuclear Regulatory Commission (NRC) staff (the staff) of the preliminary design of the SHINE IF and RPF ESFs as presented in Chapter 6, "Engineered Safety Features," of the SHINE Preliminary Safety Analysis Report (PSAR), as supplemented by the applicant's responses to requests for additional information (RAIs).

6a Irradiation Facility Engineered Safety Features

SER Section 6a, "Irradiation Facility Engineered Safety Features," provides an evaluation of the preliminary design of SHINE's IF ESFs, as presented in SHINE PSAR Section 6a2, "Irradiation Facility Engineered Safety Features," within which, features designed to mitigate consequences of accidents and events in order to keep radiological exposures within acceptable values are described.

6a.1 Areas of Review

The staff reviewed PSAR Section 6a2 against applicable regulatory requirements using appropriate regulatory guidance and standards to assess the sufficiency of the preliminary design and performance of the SHINE IF ESFs. As part of this review, the staff evaluated descriptions and discussions of the SHINE IF ESFs, with special attention to design and operating characteristics, unusual or novel design features, and principal safety considerations. The preliminary design of the SHINE IF ESFs was evaluated to ensure the sufficiency of principal design criteria; design bases; and information relative to materials of construction, general arrangement, and approximate dimensions, sufficient to provide reasonable assurance that the final design will conform to the design basis. In addition, the staff reviewed SHINE's identification and justification for the selection of those variables, conditions, or other items, which are determined to be probable subjects of technical specifications for the facility, with special attention given to those items which may significantly influence the final design.

Areas of review for this section included a summary description of the IF ESFs, as well as a detailed description of the IF confinement. Within these review areas, the staff assessed, in part, the design bases and functional descriptions of the required mitigative features of the confinement ESFs; drawings, schematic drawings and tables of important design and operating parameters, and specifications for confinement ESFs; necessary ESF equipment included as part of the confinement fabrication specifications; description of control and safety instrumentation, including locations and functions of sensors, readout devices, monitors and isolation components, as applicable; and the required limitations on the release of confined effluents to the environment.

6a.2 Summary of Application

PSAR Section 6a2.2.1.2, “Confinement Systems and Components,” provides additional details on the specific SSCs making up the confinement system for the IF. This includes information on the mitigation of uncontrolled releases occurring within an irradiation unit (IU) cell, target solution vessel off gas system (TOGS) shielded cell, and the tritium purification system (TPS) glovebox by the confinement system. PSAR Section 6a2.2.1.3, “Functional Components,” provides a brief description on the failure state of active components of the confinement system during upset conditions or in adverse conditions. This section also discusses single failure events, redundancy and independencies of design of systems, and components required to perform a safety function. PSAR Section 6a2.2.1.4, “Confinement Components,” identifies and provides details on the components associated with the secondary confinement barrier of the IU cells, TOGS shielded cell, or TPS glovebox. This section also provides references to design, fabrication, and testing codes that will be used for the development of components. PSAR Section 6a2.2.1.5, “Engineered Safety Feature Test Requirements,” describes general approaches to testing requirements and features for ESF components and systems. PSAR Section 6a2.2.1.6, “Design Basis,” provides a general discussion of codes and standards to be used for the SHINE facility and supporting ESFs with cross references to PSAR Chapter 3, “Design of Structures, Systems, and Components”; Chapter 4, “Irradiation Unit and Radioisotope Production Facility Description”; Chapter 7, “Instrument and Control Systems”; Chapter 9, “Auxiliary Systems”; and Chapter 14, “Technical Specifications.” As discussed in SHINE PSAR Sections 6a2.2.2, “Containment,” and 6a2.3, “Emergency Cooling System,” the SHINE facility does not have a containment, nor does it have an emergency core cooling system.

Additionally, PSAR Table 6a2.1-1, “Summary of IF Design Basis Accidents and ESF Provided for Mitigation,” summarizes the three design-basis accidents (DBAs) mitigated by the confinement ESF, including a list of structures, systems, and components (SSCs) that provide an ESF.

6a.3 Regulatory Basis and Acceptance Criteria

The staff reviewed SHINE PSAR Section 6a2 against applicable regulatory requirements, using appropriate regulatory guidance and standards, to assess the sufficiency of the preliminary design and performance of the SHINE IF ESFs for the issuance of a construction permit. In accordance with paragraph (a) of Title 10 of the *Code of Federal Regulations* (10 CFR) 50.35, “Issuance of Construction Permits,” a construction permit authorizing SHINE to proceed with construction may be issued once the following findings have been made:

(1) SHINE has described the proposed design of the facility, including, but not limited to, the principal architectural and engineering criteria for the design, and has identified the major features or components incorporated therein for the protection of the health and safety of the public.

(2) Such further technical or design information as may be required to complete the safety analysis, and which can reasonably be left for later consideration, will be supplied in the final safety analysis report (FSAR).

(3) Safety features or components, if any, which require research and development have been described by SHINE and a research and development program will be conducted

that is reasonably designed to resolve any safety questions associated with such features or components.

(4) On the basis of the foregoing, there is reasonable assurance that: (i) such safety questions will be satisfactorily resolved at or before the latest date stated in the application for completion of construction of the proposed facility, and (ii) taking into consideration the site criteria contained in 10 CFR Part 100, "Reactor Site Criteria," the proposed facility can be constructed and operated at the proposed location without undue risk to the health and safety of the public.

With respect to the last of these findings, the staff notes that the requirements of 10 CFR Part 100 are specific to nuclear power reactors, and therefore not applicable to the SHINE facility. However, the staff evaluated SHINE's site specific conditions using site criteria similar to 10 CFR Part 100, by using the guidance in NUREG-1537. The staff's review evaluated the geography and demography of the site; nearby industrial, transportation, and military facilities; site meteorology; site hydrology; and site geology, seismology, and geotechnical engineering to ensure that issuance of the construction permit will not be inimical to public health and safety.

The staff's evaluation of the preliminary design of the SHINE IF ESFs does not constitute approval of the safety of any design feature or specification. Such approval will be made following the evaluation of the final design of the SHINE IF ESFs as described in the FSAR as part of SHINE's operating license application.

6a.3.1 Applicable Regulatory Requirements

The applicable regulatory requirements for the evaluation of SHINE's IF ESFs are as follows:

- 10 CFR 50.34, "Contents of applications; technical information," paragraph (a), "Preliminary safety analysis report."
- 10 CFR 50.40, "Common Standards."
- 10 CFR 20.1201, "Occupational dose limits for adults."
- 10 CFR 20.1301, "Dose limits for individual members of the public."

6a.3.2 Regulatory Guidance and Acceptance Criteria

In applying guidance and acceptance criteria, the staff used its judgment as to which acceptance criteria were relevant to SHINE's proposed facility, as much of this guidance was originally developed for nuclear reactors. Given the similarities in SHINE's proposed facility and non-power research reactors, the staff used established guidance documents and the Commission's regulations to determine the acceptance criteria for demonstrating compliance with 10 CFR regulatory requirements. For example, the staff used:

- NUREG-1537, Part 1, "Guidelines for Preparing and Reviewing Applications for the Licensing of Non-Power Reactors, Format and Content," issued February 1996 (Reference 4).

- NUREG-1537, Part 2, "Guidelines for Preparing and Reviewing Applications for the Licensing of Non-Power Reactors, Standard Review Plan and Acceptance Criteria," issued February 1996 (Reference 5).

- "Final Interim Staff Guidance [ISG] Augmenting NUREG-1537, Part 1, 'Guidelines for Preparing and Reviewing Applications for the Licensing of Non-Power Reactors: Format and Content,' for Licensing Radioisotope Production Facilities and Aqueous Homogeneous Reactors," dated October 17, 2012 (Reference 6).

- "Final Interim Staff Guidance Augmenting NUREG-1537, Part 2, 'Guidelines for Preparing and Reviewing Applications for the Licensing of Non-Power Reactors: Standard Review Plan and Acceptance Criteria,' for Licensing Radioisotope Production Facilities and Aqueous Homogeneous Reactors," dated October 17, 2012 (Reference 7).

As stated in the ISG Augmenting NUREG-1537, the staff determined that certain guidance originally developed for heterogeneous non-power research and test reactors is applicable to aqueous homogenous facilities and production facilities. SHINE used this guidance to inform the design of its facility and prepare its PSAR. The staff's use of reactor-based guidance in its evaluation of the SHINE PSAR is consistent with the ISG Augmenting NUREG-1537.

As appropriate, additional guidance (e.g., NRC regulatory guides, Institute of Electrical and Electronics Engineers (IEEE) standards, American National Standards Institute/American Nuclear Society (ANSI/ANS) standards) has been used in the staff's review of SHINE's PSAR. The use of additional guidance is based on the technical judgment of the reviewer, as well as references in NUREG-1537, Parts 1 and 2; the ISG Augmenting NUREG-1537, Parts 1 and 2; and the SHINE PSAR. Additional guidance documents used to evaluate SHINE's PSAR are provided as references in Appendix B of this SER.

6a.4 Review Procedures, Technical Evaluation, and Evaluation Findings

The staff performed an evaluation of the technical information presented in SHINE PSAR Section 6a2, as supplemented by the applicant's responses to RAIs, to assess the sufficiency of the preliminary design and performance of the SHINE IF ESFs for the issuance of a construction permit, in accordance with 10 CFR 50.35(a). Sufficiency of the preliminary design and performance of the SHINE IF ESFs is determined by ensuring the design and performance meet applicable regulatory requirements, guidance, and acceptance criteria, as discussed in Section 6a.3, "Regulatory Basis and Acceptance Criteria," of this SER. While the technical evaluation of these systems provided in this section is specific to the SHINE IF, the staff's review considers the interface of these systems between the IF and RPF as part of its technical evaluation. A summary of the technical evaluation is described in SER Section 6a.5, "Summary and Conclusions."

For the purposes of issuing a construction permit, the preliminary design of the SHINE IF ESFs may be adequately described at a functional or conceptual level. The staff evaluated the sufficiency of the preliminary design of the SHINE IF ESFs based on the applicant's design methodology and ability to provide reasonable assurance that the final design will conform to the design bases with adequate margin for safety. As such, the staff's evaluation of the preliminary design of the SHINE IF ESFs does not constitute approval of the safety of any design feature or specification. Such approval will be made following the evaluation of the final design of the SHINE IF ESFs, as described in the FSAR, as part of SHINE's operating license application.

6a.4.1 Summary Description

The staff evaluated the sufficiency of SHINE's summary description of its IF ESFs, as described in SHINE PSAR Section 6a2.1, "Summary Description," and supplemented by the applicant's responses to RAIs, using the guidance from Section 6.1, "Summary Description," of NUREG-1537, Parts 1 and 2.

NUREG-1537, Part 1, Section 6.1, "Summary Description," states:

> In this section of the SAR, the applicant should briefly describe all of the ESFs in the facility design and summarize the postulated accidents they are designed to mitigate. These summaries should include the design bases and performance criteria and contain enough information for an overall understanding of the functions of the ESFs and the reactor conditions under which the equipment or systems must function.
>
> Simple block diagrams and drawings may be used to show the location, basic function, and relationship of each ESF to the facility. Detailed drawings, schematic diagrams, data, and analyses should be presented in subsequent sections of this chapter for specific ESFs.

NUREG-1537, Part 2, Section 6.1, "Summary Description," states:

> In this section of the SAR, the applicant should briefly describe all the ESFs in the facility design and summarize the postulated accidents whose consequences could be unacceptable without mitigation. A specific postulated accident scenario should indicate the need for each ESF. The details of the accident analyses should be given in Chapter 13 of the SAR and the detailed discussions of the ESFs in Section 6.2 of the SAR. These summaries should include the design bases, the performance criteria, and the full range of reactor conditions, including accident conditions, under which the equipment or systems must maintain function.
>
> The applicant may submit simple block diagrams and drawings that show the location, basic function, and relationship of each ESF to the facility. The summary description should contain enough information for an overall understanding of the functions and relationships of the ESFs to the operation of the facility. Detailed drawings, schematic diagrams, data, and analyses should be presented in Section 6.2 of the SAR for each specific ESF.

The ISG Augmenting NUREG-1537, Part 1, Section 6a2, "Aqueous Homogeneous Reactor Engineered Safety Features," states, in part: "… the guidance in this section is general enough to apply to any type of reactor facility, as long as the unique features of each are addressed and appropriate ESFs are provided to ensure that operations are conducted within safe limits."

The information in SHINE PSAR Section 6a2 forms the basis for evaluations performed in PSAR Chapter 13, "Accident Analysis." PSAR Section 6a2.1 provides PSAR Table 6a2.1-1, which describes the ESFs required to maintain the confinement function during three design basis accidents (DBAs) analyzed in SHINE PSAR Chapter 13. However, the staff determined that while Section 6a2.1 of the SHINE PSAR contains a description of the ESFs for the IF, it did not contain enough information for an overall understanding of the functions of the ESFs.

Therefore, in RAI 6a2.1-1 (Reference 14), the staff requested that the applicant provide a description of the conditions under which ESFs must function; block diagrams and drawings to clarify the location, basic function, and the relationship of each ESF to the facility; whether the target solution preparation systems (TSPSs) are part of the IF or the RPF; and whether any valves or piping located in the target solution preparation system room are considered part of the confinement boundary for either or both the IF or the RPF.

In response to RAI 6a2.1-1 (Reference 21), the applicant stated the conditions under which the ESFs were required to operate included: mishandling or malfunction of target solution; mishandling or malfunction of equipment affecting the PSB; and Tritium Purification System (TPS) DBA. The postulated accidents could potentially result in releases of radioactive materials with high radiation fields in the IU cells, primary cooling (PCLS and LWPS) rooms, TOGS shielded cells, and TPS gloveboxes. Additionally, the applicant stated that structures and components will be designed to perform their confinement function under adverse conditions for the duration of the accident, including: expected radiation exposure levels, acidic chemical environment, and capable of performing in environments determined from the fire hazards analysis. Additionally, the applicant provided a new block diagram, PSAR Figure 6a2.1-1-1, showing the basic function and relationship of the SSCs providing the confinement ESF in the IF to the facility, as well as the relationship between each ESF SSC in the confinement. The SSCs in providing in the confinement ESF are: IU cells, including penetration seals, RVZ1 ductwork up to bubble-tight isolation dampers, Bubble-tight isolation dampers, Isolation valves on piping systems penetration the IU cells, TOGS shielded cells, including penetration seals, Engineered Safety Features Actuation System (ESFAS), Double-walled pipe used for the TPS, TPS gloveboxes, and TPS confinement system. Further, the applicant stated the TSPS is part of the RPF and valves and piping located inside the TSPS room are not expected to be part of the confinement boundary for either the IF or the RPF.

The staff finds this response satisfies the acceptance criteria of NUREG-1537, Part 2, Section 6.1 and demonstrates adequate design criteria for a preliminary design. The staff will confirm that the final design conforms to this design basis during the evaluation of SHINE's FSAR.

On the basis of its review, the staff has determined that the level of detail provided in the summary description of the SHINE IF ESFs demonstrates an adequate design basis for a preliminary design.

Therefore, the staff finds that the summary description of the SHINE IF ESFs, as described in SHINE PSAR Section 6a2.1, is sufficient and meets the applicable regulatory requirements and guidance for the issuance of a construction permit in accordance with 10 CFR 50.35. The staff will confirm that the final design conforms to this design basis during the evaluation of SHINE's FSAR.

6a.4.2 Confinement

The staff evaluated the sufficiency of the preliminary design of the SHINE confinement and related systems as described in SHINE PSAR 6a.2.2.1, "Confinement," in part, by reviewing confinement mitigation requirements, the defined confinement envelope, and detailed descriptions of the ESFs associated with confinement. Additionally, the staff evaluated the passive and active ESF components, under normal and upset operational conditions. The functional requirements, design bases, probable subjects of technical specifications, and testing requirements were also evaluated for sufficiency.

Consistent with the review procedures of NUREG-1537, Part 2, Section 6.2.1, "Confinement," the staff: (1) reviewed the accident scenarios analyzed in PSAR Chapter 13 and evaluated whether the confinement will sufficiently mitigate consequences; (2) reviewed design and functional bases against analyzed accidents; and (3) compared diffusion and dispersion of released airborne radionuclides.

SHINE PSAR, Section 6a2.2.1.2, "Confinement System and Components," states, in part, that "[t]his ESF effectively reduces the amount of ductwork in the confinement volume that needs to remain intact to achieve IU cell, TOGS shielded cell, or TPS glovebox confinement."

In RAI 6a2.2-2 (Reference 14), the staff asked the applicant to provide clarification regarding the meaning of this sentence.

In response to RAI 6a2.2-2 (Reference 20), the applicant stated, in part, that:

> PSAR Section 6a2.2.1.2 provides a discussion of the IF confinement systems and components that help to mitigate the consequences of a potential accident. These confinement systems and components include bubble-tight isolation dampers that isolate the ductwork into and out of a confinement area following a confinement isolation signal resulting from high radiation. PSAR Figure 9a2.1-1 shows typical cell isolation dampers adjacent to their respective cells.

The applicant also stated, in part, that:

> …[its] design locates the isolation dampers as close as practical to the confinement area. When the isolation dampers for a cell or glovebox close on the receipt of a confinement isolation signal, the spread of contamination is limited to that cell or glovebox plus the small amount of ductwork between the cell or glovebox and its isolation dampers. Ductwork downstream of an isolation damper therefore does not need to remain intact to achieve confinement of the IU cell, TOGS shielded cell, or TPS glovebox. Since contamination is prevented from spreading through the ventilation system, the total potential for leakage is reduced by minimizing the amount of ductwork in contact with contaminated material following a design basis accident.

The staff finds this response provides sufficient clarification of the aforementioned statement found in PSAR Section 6a2.2.1.2.

SHINE PSAR, Section 6a2.2.1.2, "Confinement System and Components," states, in part, that "[a] failure of the TPS outside the glovebox is mitigated by the TPS confinement system. The TPS confinement system uses isolation valves to stop a tritium leak outside the glovebox when a leak is detected." The staff needed additional information to determine the adequacy of the design of the TPS confinement system.

Therefore, in RAI 6a2.2-3 (Reference 14), the staff asked the applicant to provide additional information on the design and function of the TPS confinement system, including on the ability of the system to stop tritium leaks outside of the glovebox.

In response to RAI 6a2.2-3 (Reference 21), the applicant stated, in part, that:

> …the TPS confinement system boundaries consist of:

- the TPS gloveboxes, including the pressure protection bubbler and glovebox airlock;
- the outer jacket of double-walled piping that transfers tritium outside of gloveboxes; and
- the TPS confinement isolation valves that isolate portions of the tritium system upon loss of integrity to limit tritium releases.

The applicant further stated, in part, that:

> …tritium outside the glovebox is contained in piping normally under vacuum, which assists in reducing the potential for releases. Pressure detection is expected be used to monitor for a leak in these lines, since an unexpected increase in pressure indicates a potential leak. Once the pressure rises past the allowable set points, isolation valves will close in order to reduce the potential amount of tritium released. The confinement isolation valve closure time will be accounted for in the accident analysis and the assumed value will be bounding. The only significant portion of the tritium inventory that is not in a confinement area or double-walled piping is the tritium in the neutron drivers. The evaluation of the release of tritium from the neutron drivers is described in Subsection 13a2.2.12.3. Isolation valves will isolate the NDAS from the TPS should a leak in NDAS be detected.

The applicant also stated that isolation valve locations will be determined during detailed design and provided in the FSAR. The staff finds this response provides sufficient detail regarding the TPS confinement system and demonstrates adequate design criteria for a preliminary design. Valve location details required to complete the evaluation may be reasonably left for later consideration and will be submitted in the FSAR. The staff will confirm that the final design conforms to this design basis during the evaluation of SHINE's FSAR.

SHINE PSAR, Section 6a2.2.1.3, "Functional Requirements," states, in part, "[a]ctive confinement components are designed to fail into a safe state if conditions such as loss of signal, loss of power, or adverse environments are experienced." In order to determine the adequacy of the SHINE design to withstand and mitigate adverse environments, the staff needed additional information; therefore, in RAI 6a2.2-4 (Reference 14), the staff asked the applicant to provide information on the assumed "adverse environments" and how components are designed to accommodate for them.

In response to RAI 6a2.2-4 (Reference 21), the applicant stated, in part, that:

> …the assumed adverse environments for the active confinement components in the IF are due to the release of radioactive materials. These assumed adverse environments are high radiation fields in the IU cells, primary cooling (PCLS and LWPS) rooms, TOGS shielded cells, and TPS gloveboxes, and acidic environments in the PCLS and LWPS. The active confinement components (e.g., isolation dampers, isolation valves) will be designed to perform their functions under the expected radiation conditions for the duration of the accident. The active confinement components that may be exposed to acidic environments (e.g., isolation valves on PCLS and LWPS) due to target solution release will be chemically compatible with the target solution. Except for dampers credited for isolation during postulated fires, ESF components in the IF are not expected to

> experience adverse temperature or pressure environments due to the low temperature and low pressure nature of the SHINE IF processes. Dampers that are credited to perform isolation functions during postulated fires will be capable of performing the required level of isolation in the potential environments (e.g., elevated temperature) determined from the FHA.

The staff finds this response provides sufficient detail regarding “adverse environments” and the method used to determine design of components. The staff finds this response demonstrates adequate design criteria for a preliminary design. The staff will confirm that the final design conforms to this design basis during the evaluation of SHINE’s FSAR.

SHINE PSAR, Section 6a2.2.1.3, “Functional Requirements,” states:

> Mechanical, instrumentation, and electrical systems and components are designed to ensure that a single failure, in conjunction with an initiating event, does not result in the loss of the system’s ability to perform its intended safety function. The single failure considered is a random failure and any consequential failures in addition to the initiating event for which the system is required and any failures that are a direct or consequential result of the initiating event.

To understand the meaning of the second sentence above, the staff needed additional information. Therefore, in RAI 6a2.2-5 (Reference 14), the staff asked the applicant to: (1) provide clarification regarding the meaning of the second sentence; and (2) provide the basis for how the system design meets the single-failure criterion stated, or provide the reference to the section of the PSAR, which describes that basis.

In response to RAI 6a2.2-5 (Reference 20), the applicant stated that PSAR Subsection 6a2.2.1.3 contains an administrative error. SHINE subsequently revised this statement in the PSAR to read as follows:

> Safety-related mechanical, instrumentation, and electrical systems and components are designed to ensure that a single failure of an active component, in conjunction with an initiating event, does not result in the loss of the system’s ability to perform its intended safety functions. The single failure considered is a random failure."

SHINE PSAR, Section 6a2.2.1.4, “Confinement Components,” discusses the “secondary confinement barrier of the IU cells,” but does not define or fully describe this term. Therefore, in RAI 6a2.2-6 (Reference 14), the staff asked the applicant to explain precisely what comprises the “secondary confinement barrier of the IU cells.”

In response to RAI 6a2.2-6 (Reference 20), the applicant stated PSAR Section 6a2.2.1.4 contains an administrative error. The facility has a primary and a secondary fission product barrier. The primary fission product barrier is the primary system boundary, while the secondary fission product barrier is designated the confinement boundary or barrier, or just confinement. The facility does not have a “secondary confinement barrier.” The use of the phrase “secondary confinement barrier” was an administrative error. SHINE has corrected this error in its PSAR.

SHINE PSAR, Section 6a2.2.1.4, “Confinement Components,” indicates that the details of the TPS confinement system will be left to the FSAR. To determine whether it is reasonable to provide details of the TPS confinement system in the FSAR, the staff needed additional

information. Therefore, in RAI 6a2.2-7 (Reference 14), the staff asked the applicant to provide the rationale for leaving the details of TPS confinement to the FSAR.

In response to RAI 6a2.2-7 (Reference 21), the applicant noted that the TPS confinement system is described in the response to RAI 6a2.2-1. The applicant further provided that the details of the components that comprise the TPS are described in Subsection 9a2.7.1 of the PSAR. Isolation valve locations will be determined during detailed design and provided in the FSAR. The specific valve locations will be dependent on the final design and layout of the system. However, the applicant also states that valve locations and number will be sufficient to limit consequences from accidents to less than 10 CFR Part 20 limits.

The staff finds this response is sufficient for a preliminary design. The staff will confirm that the final design conforms to this design basis during the evaluation of SHINE's FSAR.

SHINE PSAR, Section 6a2.2.1.4, "Confinement Components," mentions systems that are "open to the IU cell, TOGS shielded cell atmosphere, or TPS glovebox," but does not identify them. Therefore, in RAI 6a2.2-8 (Reference 14), the staff asked the applicant to identify the systems that are open to the IU cell, TOGS shielded cell atmosphere, or TPS glovebox.

In response to RAI 6a2.2-8 (Reference 20), the applicant indicated that PSAR Subsection 6a2.2.1.4 states, "For systems open to the IU cell, TOGS shielded cell atmosphere, or TPS glovebox, redundant isolation valves are provided." The applicant indicated that this statement:

> …describes the design requirement of the confinement system to ensure that no system creates a direct path from the atmosphere inside of the IU cell, TOGS shielded cell, or TPS glovebox to outside the cell or glovebox. A direct path would represent an unacceptable source of leakage from the respective confinement area during an accident, and proper isolation capability is required to ensure a complete confinement barrier. The sentence refers to systems that are normally open to the atmosphere, or may be open for maintenance or other operations when confinement capabilities are required (e.g., when an irradiated target solution batch is present in the IU cell, IU cell confinement capability is required).

The applicant further stated, in part, that "based on preliminary design, the Light Water Pool System (LWPS) and RVZ1 are normally open systems to the IU cell atmosphere; RVZ1 is normally open to the TOGS shielded cell atmosphere; and RVZ1 and the nitrogen supply from the Inert Gas Control System (IGS) are connected to the TPS glovebox atmosphere."

The staff finds this response provides sufficient detail regarding the open systems for a preliminary design and it is reasonable to leave further details for submission as part of the final design in the FSAR. The staff will confirm that the final design conforms to this design basis during the evaluation of SHINE's FSAR.

SHINE PSAR, Table 6a2.2-1, "Irradiation Facility Confinement Safety Functions" (page 6a2-9), references isolation valves on piping systems, but the applicant did not identify the valves, provide a list of the valves or reference a schematic which details the isolation valves. Therefore, in RAI 6a2.2-9 (Reference 14), the staff asked the applicant to provide a list, schematic or reference to a list of the isolation valves.

In response to RAI 6a2.2-9 (Reference 21), the applicant stated that PSAR Subsection 6a2.2.1.4:

> …describes confinement components of systems normally open to the IU cells, TOGS shielded cells, and TPS glovebox. The IU cells and TOGS shielded cells will have RVZ1 inlet and outlet bubble-tight isolation dampers to achieve the confinement boundary. A schematic of RVZ1 is shown in PSAR Figure 9a2.1-1. As shown in PSAR Figure 4a2.1-1, the IU cell has penetrations for the PCLS and LWPS. These systems provide cooling to the TSV, and both systems will be provided with isolation valves for confinement. TPS confinement is achieved by the TPS Confinement System. The TPS will also contain isolation valves. As described in the response to RAI 6a2.2-1, the necessary locations of isolations valves will be determined from the accident analysis during detailed design, and will include valves that isolate the NDAS from the TPS should a leak in NDAS be detected. Additional detail regarding the TPS isolation valves is also provided in the response to RAI 6a2.2-3. Additional isolation valve details will be developed during detailed design, and the FSAR will be updated with a list, details, or locations of these isolation valves.

The staff finds this response is sufficient for a preliminary design and that it is reasonable to leave the requested details until the final design is submitted in the FSAR. The staff will confirm that the final design conforms to this design basis during the evaluation of SHINE's FSAR.

NUREG-1537, Part 1, Section 6.2.1, "Confinement," states, in part, that "[f]or the confinement to function as an ESF, the design bases for the consequence-mitigation functions should be derived from the accident analyses in SAR Chapter 13." NUREG-1537, Part 2, Section 6.2.1, "Confinement," Acceptance Criteria, states, in part, "[t]o be considered an ESF, design features must exist to mitigate the consequences of specific accident scenarios."

SHINE PSAR, Section 6a2.2, "Irradiation Facility Engineered Safety Features Detailed Description," contains a list of initiating events (IEs) that were included for the DBA review. The staff noted that a subsequent list identifies IEs, which do not have radiological consequences that require mitigation by ESFs. However, Section 6a2.2 did not explain the basis for the determination of which IEs do not have radiological consequences. Therefore, in RAI 6a2.2-10 (Reference 14), the staff asked the applicant to provide the basis for this determination and a reference to the basis or analysis, which supports this determination or to the section(s) of SHINE PSAR that contain(s) such an analysis.

In response to RAI 6a2.2-10 (Reference 20), the applicant stated that the bases for the determination of which initiating events have radiological consequences are provided in Section 13a2.2 of the PSAR. SHINE has included a table in PSAR Section 6a2.2 that provides a reference to the FSAR Chapter 13 subsection where the specific radiological consequence analysis can be found for each initiating event.

The staff finds this response satisfies the acceptance criteria of NUREG-1537, Part 2, Section 6.2.1 and demonstrates adequate design criteria for a preliminary design. It is reasonable to leave the requested details until the final design is submitted in the FSAR. The staff will confirm that the final design conforms to this design basis during the evaluation of SHINE's FSAR.

NUREG-1537, Part 1, Section 6.2.1, “Confinement,” states, in part, “[t]he discussion of mitigative effects should contain a comparison of potential radiological exposures to the facility staff and the public with and without the ESF”

NUREG-1537, Part 2, Section 6.2.1, “Confinement,” Evaluation Findings, states, in part, that:

> [t]his section of the SAR should contain sufficient information for the following types of conclusions, which will be included in the safety evaluation report:
>
> - The scenarios for all potential accidents at the reactor facility have been analyzed by the applicant and reviewed by the staff. Mitigation of consequences by a confinement system has been proposed in the SAR analyses for any accident that could lead to potential unacceptable radiological exposures to the public, the facility staff, or the environment.
> - The staff has reviewed the designs and functional descriptions of the confinement ESF; they reasonably ensure that the consequences will be limited to the levels found acceptable in the accident analyses of Chapter 13 of the SAR.
> - The designs and functional descriptions of the confinement ESF reasonably ensure that control of radiological exposures or releases during normal operation will not be degraded by the ESF.

SHINE PSAR, Section 6a2.2.1, “Confinement,” did not contain a comparison of potential radiological exposures to the facility staff and the public with and without the ESF. Therefore, in RAI 6a2.2-11 (Reference 14), the staff asked the applicant to provide the comparative study or reference the section of SHINE PSAR, which provides this information.

In response to RAI 6a2.2-11 (Reference 21), the applicant stated that PSAR Table 6a2.1-1 “provides the IF DBAs that are mitigated by the IF confinement ESF. The IF maximum hypothetical accident (MHA) is also mitigated by the same confinement ESFs, as it is an extension of the mishandling or malfunction of target solution.” The applicant also provided PSAR Table 6a2.2-11-1, which contains a comparative study of the ESFs for mitigating these IF DBAs. For the unmitigated consequences, the applicant stated in part, that they “assumed none of the active ESFs functioned. The only active ESF components in the confinement credited for mitigating these accidents are the bubble-tight isolation dampers. The remaining assumptions and input values used to calculate the doses are the same between the unmitigated and mitigated cases. The unmitigated and mitigated radiation doses to workers at the SHINE facility are the same, as no active ESF components are credited in the accident analysis for the workers.”

Table 6a2.2-11-1. Comparison of Unmitigated and Mitigated Radiological Doses for IF DBAs

Event	Unmitigated Public Dose (rem)				Mitigated Public Dose (rem)			
	Site Boundary		Nearest Resident		Site Boundary		Nearest Resident	
	TEDE	Thyroid	TEDE	Thyroid	TEDE	Thyroid	TEDE	Thyroid
Target Solution Release into the IU Cell (IF Postulated MHA)	1.65	1.58	2.30×10^{-1}	2.21×10^{-1}	1.65×10^{-2}	1.58×10^{-2}	2.30×10^{-3}	2.21×10^{-3}
Mishandling or Malfunction of Target Solution	2.19×10^{-1}	1.58	3.06×10^{-2}	2.21×10^{-1}	2.19×10^{-3}	1.58×10^{-2}	3.06×10^{-4}	2.21×10^{-3}
Mishandling or Malfunction of Equipment Affecting the PSB	1.59	7.03×10^{-2}	2.23×10^{-1}	9.84×10^{-3}	1.59×10^{-2}	7.03×10^{-4}	2.23×10^{-3}	9.84×10^{-5}
TPS Design Basis	5.6×10^{-2}	---	8×10^{-3}	---	5.6×10^{-4}	---	8×10^{-5}	---

The applicant also indicated that the leak path factors in PSAR Chapter 13 for the DBA of the TPS were incorrect in relation to the provided doses and that it revised the TPS DBA described in PSAR Chapter 13 to correct the discrepancy and provide the reduced public doses.

The staff finds this response satisfies the acceptance criteria of NUREG-1537, Part 2, Section 6.2.1 and demonstrates adequate design criteria for a preliminary design. It is reasonable to leave the requested details until the final design is submitted in the FSAR. The staff will confirm that the final design conforms to this design basis during the evaluation of SHINE's FSAR.

NUREG-1537, Part 1, Section 6.2.1,"Confinement," states, in part, that "[a] schematic diagram of the system should be presented showing the blowers, dampers, filters, other components necessary for operation of the system and flow paths." The staff noted that SHINE PSAR, Section 6a2.2.1, "Confinement," does not contain or reference the confinement ESF HVAC system schematic diagram. Therefore, in RAI 6a2.2-12 (Reference 14), the staff asked the applicant to provide the schematic diagram(s) for this system.

In response to RAI 6a2.2-12 (Reference 20), the applicant stated that PSAR Figures 9a2.1-1 and 9a2.1-2 provide schematic diagrams showing the ESF heating, ventilation, and air conditioning (HVAC) systems, including blowers, dampers, filters, other components necessary for operation of the system, and flow paths.

The staff finds this response satisfies the acceptance criteria of NUREG-1537, Part 2, Section 6.2.1 and demonstrates adequate design criteria for a preliminary design. The staff will confirm that the final design conforms to this design basis during the evaluation of SHINE's FSAR.

NUREG-1537, Part 1, Section 6.2.1, "Confinement," states, in part, that "[a]utomatic and manual trip circuits, bypasses, interlocks, and special I&C [instrumentation and control] systems for the ESF system should be described briefly in this section and in detail in Chapter 7."

NUREG-1537, Part 2, Section 6.2.1, "Confinement," Areas of Review, states, in part, that "[t]he reviewer should evaluate… [Thus, this section should contain a]…description of control and

safety instrumentation, including the locations and functions of sensors, readout devices, monitors, and isolation components, as applicable."

SHINE PSAR, Section 6a2.2.1, "Confinement," discusses the confinement ESF system, but the staff did not find a description of the automatic and manual trip circuits, bypasses, interlocks, and special I&C systems. Therefore, in RAI 6a2.2-13 (Reference 14), the staff asked the applicant to provide a brief description of automatic and manual trip circuits, bypasses, interlocks, and special I&C systems, including relevant schematics or functional block diagrams, or reference(s) to their location in PSAR Chapter 7.

In response to RAI 6a2.2-13 (Reference 20), the applicant stated, in part, that:

> …these confinement boundaries include passive barriers (e.g., walls) and active components (e.g., isolation dampers, isolation valves). The active components required to function to maintain the confinement barrier in an accident are Engineered Safety Features (ESFs) and they are actuated by the Engineered Safety Features Actuation System (ESFAS). A description of the ESFAS is provided in PSAR Section 7a2.5. No special I&C systems are employed in ESF actuation. A discussion of the automatic and manual trip circuits of the ESFAS is provided in PSAR Subsection 7a2.5.4. A typical ESF circuit is provided in PSAR Figure 7a2.5-1, an example ESFAS panel is provided in PSAR Figure 7a2.5-2, and the ESFAS operator control panel is provided in PSAR Figure 7a2.5-3. These figures represent the current schematics for the ESFAS. A description of the ESFAS interlocks and bypasses, if any, will be determined as a part of detailed design and provided in the FSAR. An IMR has been initiated to track the inclusion of a description of the ESFAS interlocks and bypasses, if any, in the FSAR.

The staff finds this response satisfies the acceptance criteria of NUREG-1537, Part 2, Section 6.2.1 and demonstrates adequate design criteria for a preliminary design. It is reasonable to leave description of the ESFAS interlocks and bypasses, if included in the final design, as part of the detailed design to be provided in the FSAR. The staff will confirm that the final design conforms to this design basis during the evaluation of SHINE's FSAR.

NUREG-1537, Part 1, Section 6.2.1, "Confinement," states, in part, that "[p]eriodic functional testing of damper closure, room isolation, minimum airflow rates, automatic system shutdown and startup, and activation setpoints should be required and specified. See Chapter 14, "Technical Specifications," of this format and content guide, for details on what technical specification requirements should be identified and justified in this section."

NUREG-1537, Part 2, Section 6.2.1, "Confinement," Areas of Review, states, in part, that "[t]he reviewer should evaluate…[Thus, this section should describe]… [s]urveillance methods and intervals included in the technical specifications that ensure operability and availability of the confinement ESFs, when required."

SHINE PSAR, Section 6a2.2.1.5, "Engineered Safety Feature Test Requirements," states, in part, that "[e]ngineered safety features are periodically tested to ensure that ESF components maintain operability…." However, the staff noted that plans for testing ESF functionality as well as operability were not fully described. Therefore, in RAI 6a2.2-14a (Reference 14), the staff asked the applicant to describe planned tests of ESFs for "functionality" as well as "operability"

(an example would be leak tightness), including preoperational, as well as post-commissioning testing.

In response to RAI 6a2.2-14a (Reference 20), the applicant stated:

> Of the two terms "operable" and "functional," "operable" is the more restrictive condition, applying only to SSCs described in the TS. A component or system is operable when it is capable of performing its intended function. To be operable, an SSC must be able to perform its design basis function, and be in compliance and in-frequency for the TS surveillances. "Functionality" is generally only applied to non-TS SSCs, and is therefore not specifically defined in the same manner as "operability," but usually refers to the ability of non-TS SSCs to perform their design functions. ESF SSCs will be tested pre-operationally and following receipt of an OL via TS surveillances, to ensure that the assumptions made in PSAR Chapter 13 are valid. SHINE's current planned tests for ESF components, both pre-operational and post-commissioning, are as follows:
>
> - Penetration seals, isolation valves, bubble-tight isolation dampers, gloveboxes, and other components that are relied upon to maintain the confinement boundary will be leak tested;
> - Isolation valves, bubble-tight dampers, and other equipment relied upon to change position in response to an ESFAS signal will be tested for freedom of movement and correct position indication in response to manual and automatic ESFAS signals;
> - Additional testing will be conducted based on applicable vendor recommendations; and
> - Intervals of testing will be included in the TS and may be based on factors such as manufacturer recommendations, industry operating experience, equipment reliability, or plant risk.

The staff finds this response satisfies the acceptance criteria of NUREG-1537, Part 2, Section 6.2.1 and demonstrates adequate design criteria for a preliminary design. The staff will confirm that the final design conforms to this design basis during the evaluation of SHINE's FSAR.

On the basis of its review, the staff has determined that the level of detail provided on confinement is adequate and supports the preliminary design and satisfied the applicable acceptance criteria of NUREG-1537, Part 2, Section 6.2.1, allowing the staff to conclude:

(1) The scenarios for potential accidents at the facility have been analyzed by the applicant and reviewed by the staff. Mitigation of consequences by a confinement system has been proposed in the SAR analyses for any accident that could lead to potential unacceptable radiological exposures to the public, the facility staff or the environment. The preliminary designs and functional descriptions of the confinement ESF reasonably ensure that the consequences will be limited to the levels found acceptable in the accident analyses of PSAR Chapter 13.

(2) The radiological consequences from accidents to the public, the environment, and the facility staff will be reduced by the proposed confinement ESF to values that do not exceed the applicable limits of 10 CFR Part 20 and are as far below the regulatory limits as can be reasonably achieved.

Therefore, the staff finds that the preliminary design of the SHINE confinement ESFs, as described in PSAR Section 6a2.2 and supplemented by the applicant's responses to RAIs, is sufficient and meets the applicable regulatory requirements and guidance for the issuance of a construction permit in accordance with 10 CFR 50.35 and 50.40. Further technical or design information required to complete the safety analysis may reasonably be left for later consideration in the FSAR. The staff will confirm that the final design conforms to this design basis during evaluation of SHINE's FSAR.

6a.4.3 Containment

The staff evaluated the sufficiency of SHINE's treatment of containment, as described in SHINE PSAR Section 6a2.2.2, "Containment," using the guidance and acceptance criteria of Section 6.2.2, "Containment," of NUREG-1537, Parts 1 and 2. As stated in SHINE PSAR Section 6a2.2, "The SHINE facility does not employ a containment feature. Due to the low temperature and power level of facility operations, the safety analysis demonstrates that confinement features are adequate to mitigate potential accidents."

Based on the information provided on the preliminary design of the SHINE facility and evaluated in Section 6a.4.2, above, the staff finds that the SHINE confinement features are adequate to mitigate potential accidents and a containment feature is not necessary.

6a.4.4 Emergency Cooling System

The staff evaluated the sufficiency of SHINE's treatment of emergency cooling systems, as described in SHINE PSAR Section 6a2.3, "Emergency Cooling System," using the guidance and acceptance criteria of Section 6.2.3, "Emergency Core Cooling System," of NUREG-1537, Parts 1 and 2. SHINE PSAR Section 6a2.3, with reference to PSAR Chapter 13, states, "[d]ecay heat removal during accident scenarios is provided by the safety-related light water pool. No emergency core cooling system is required for the SHINE facility to mitigate the consequences of an accident."

Based on the information provided on the preliminary design of the SHINE facility, including the information provided in Sections 6a2.3 and 13a of the SHINE PSAR, the staff finds that an emergency cooling system is not required to mitigate the consequences of an accident at the SHINE facility.

6a.4.5 Probable Subjects of Technical Specifications

In accordance with 10 CFR 50.34(a)(5), the staff evaluated the sufficiency of the applicant's identification and justification for the selection of those variables, conditions, or other items which are determined to be probable subjects of technical specifications for the SHINE IF ESFs, and gave special attention to those items which may significantly influence the final design. NUREG-1537, Part 1, Section 6.2.1, "Confinement," states, in part, that "[p]eriodic functional testing of damper closure, room isolation, minimum airflow rates, automatic system shutdown and startup, and activation setpoints should be required and specified. See Chapter 14, "Technical Specifications," of this format and content guide, for details on what technical specification requirements should be identified and justified in this section."

NUREG-1537, Part 2, Section 6.2.1, "Confinement," Areas of Review, states, in part, that "[t]he reviewer should evaluate… [Thus, this section should describe]… [s]urveillance methods and intervals included in the technical specifications that ensure operability and availability of the

confinement ESFs, when required." SHINE PSAR, Section 6a2.2.1.6, "Design Bases," states, in part, that "[p]otential variables, conditions, or other items that will be probable subjects of a technical specification associated with the IF confinement systems and components are provided in Chapter 14." The staff noted it needed additional information on the probable subjects of technical specifications to determine the adequacy of the IF confinement systems and components.

Therefore, in RAI 6a2.2-14b (Reference 14), the staff asked the applicant to provide the information on the probable subjects of technical specification requirements, including periodic functional testing of damper closure, room isolation, minimum airflow rates, automatic system shutdown and startup, and activation setpoints, in the appropriate location(s) in Section 6a2 that is specified in NUREG-1537, Part 1, Chapter 14.

In response to RAI 6a2.2-14b (Reference 20), the applicant stated, in part, that the ESF function for both the IF and RPF:

> . . . consists of confinement systems, ventilation systems, and control systems. Post-accident mitigation is accomplished by confinement of radioactive or hazardous material to controlled areas to mitigate the consequences of design basis accidents (DBAs). This confinement occurs by shutting isolation dampers in the ventilation systems or isolation valves in lines penetrating the confinement area when parameters are determined to be outside predefined limits. This function is known as the ESF function. The control systems that perform this function are known as the ESFAS in the IF, and the Radiological Integrated Control System (RICS) in the RPF.
>
> Probable subjects of proposed TS for the IF and RPF ESF confinement systems are provided in PSAR Table 14a2-1, Section 3.4, and are also referenced for the RPF specifically in Subsection PSAR 14b.3.2. Per PSAR Table 14a2-1, the following Confinement Limiting Conditions of Operation (LCOs) will be developed:
>
> - TPS glove box system or confinement (IF)
> - IU and TOGS shielded cell confinement isolation valves (IF)
> - Confinement isolation valves (RPF)
>
> Probable subjects of proposed TS for the IF and RPF ESF ventilation systems are provided in PSAR Table 14a2-1, Section 3.5, and are also referenced for the RPF specifically in PSAR Subsection 14b.3.3. Per PSAR Table 14a2-1, the following LCOs will be developed:
>
> - RVZ1 and RVZ2 isolation dampers (IF and RPF)
>
> Probable subjects of proposed TS for ESF control and actuation are provided in PSAR Table 14a2-1 Sections 3.2 and 3.9 of, and are also referenced for the RPF specifically in PSAR Subsections 14b.3.1 and 14b.3.5. Per PSAR Table 14a2-1, the following LCOs will be developed:
>
> - ESFAS input to the TRPS, including the required operable channels per future TS Table 3.2.1 (i.e., TS Table 3.2.1 will include channel(s) monitored,

number of channels required, allowable value, nominal setpoint, permissible bypass, or other conditions) (IF)
- RICS (initiates the isolation functions necessary to achieve confinement in the RPF)

The probable subjects of TS for ESF equipment are described above. Specific details related to these probable subjects, such as periodic functional testing of damper closure, room isolation, minimum airflow rates, automatic system shutdown and startup, and activation setpoints will be provided in the SHINE TS, which will be provided as part of the SHINE [operating license] OL Application.

The staff finds this response satisfies the acceptance criteria of NUREG-1537, Part 2, Section 6.2.1 and demonstrates adequate design criteria for a preliminary design.

Additionally, SHINE PSAR Section 6a2.4, "Irradiation Facility Engineered Safety Features Technical Specifications," states, in part, that "potential variables, conditions, or other items that will be probable subjects of technical specifications associated with the IF ESFs are provided in Chapter 14."

Based on the information provided in PSAR Chapters 6a and 14, as well as PSAR Table 14a2-1 and supplemented by the response to RAI 6a2.2-14(b), the staff finds that the identification and justification for the selection of those variables, conditions, or other items which are determined to be probable subjects of technical specifications for the SHINE IF ESFs are sufficient and meet the applicable regulatory requirements and acceptance criteria of NUREG-1537 for the issuance of a construction permit in accordance with 10 CFR 50.35. A detailed evaluation of technical specifications, including LCOs and surveillance requirements, will be performed during the review of the SHINE operating license application.

6a.5 Summary and Conclusions

The staff evaluated the descriptions and discussions of SHINE's IF ESFs, including probable subjects of technical specifications, as described in SHINE PSAR Section 6a2 and supplemented by the applicant's responses to RAIs, and finds that the preliminary design of SHINE's IF ESFs, including the principal design criteria; design bases; and information relative to materials of construction, general arrangement, and approximate dimensions: (1) provides reasonable assurance that the final design will conform to the design basis, and (2) meets all applicable regulatory requirements and acceptance criteria in NUREG-1537.

On the basis of these findings, the staff has made the following conclusions for the issuance of a construction permit in accordance with 10 CFR 50.35 and 50.40:

(1) SHINE has described the proposed design of IF ESF systems, including, but not limited to, the principal architectural and engineering criteria for the design, and has identified the major features or components incorporated therein for the protection of the health and safety of the public.

(2) Further technical or design information required to complete the safety analysis of the IF ESFs may reasonably be left for later consideration in the FSAR.

(3) There is reasonable assurance that taking into consideration the site criteria contained in 10 CFR 100, the proposed facility can be constructed and operated at the proposed location without undue risk to the health and safety of the public.

(4) There is reasonable assurance: (i) that the construction of the SHINE facility will not endanger the health and safety of the public, and (ii) that construction activities can be conducted in compliance with the Commission's regulations.

(5) The issuance of a permit for the construction of the facility would not be inimical to the common defense and security or to the health and safety of the public.

6b Radioisotope Production Facility Engineered Safety Features

SER Section 6b, "Radioisotope Production Facility Engineered Safety Features," provides an evaluation of the preliminary design of SHINE's RPF ESFs, as presented in SHINE PSAR Section 6b, "Radioisotope Production Facility Engineered Safety Features," within which, SHINE describes RPF ESFs and nuclear criticality control.

6b.1 Areas of Review

The staff reviewed SHINE PSAR Section 6b against applicable regulatory requirements using appropriate regulatory guidance and standards to assess the sufficiency of the preliminary design and performance of SHINE's RPF ESFs. As part of this review, the staff evaluated descriptions and discussions of SHINE's RPF ESFs, with special attention to design and operating characteristics, unusual or novel design features, and principal safety considerations. The preliminary design of SHINE's RPF ESF systems was evaluated to ensure the sufficiency of principal design criteria, design bases, and information relative to materials of construction, general arrangement, and approximate dimensions, sufficient to provide reasonable assurance that the final design will conform to the design basis. In addition, the staff reviewed SHINE's identification and justification for the selection of those variables, conditions, or other items which are determined to be probable subjects of technical specifications for the facility, with special attention given to those items which may significantly influence the final design.

Areas of review for this section included a summary description of the RPF ESFs, as well as a description of the RPF confinement and nuclear criticality safety analysis. Within these review areas, the staff assessed, in part, confinement system and components, functional requirements of confinement, management of the nuclear criticality safety program, planned responses to criticality accidents, criticality-safety controls, nuclear criticality safety evaluations, and the criticality accident alarm system (CAAS).

6b.2 Summary of Application

In PSAR Section 6b.1, SHINE briefly describes the SSCs that constitute the confinement ESFs in the RPF design and summarizes the postulated accidents whose consequences could be unacceptable without mitigation. As described in greater detail in PSAR Chapter 13b, specific postulated accident scenarios indicate the need for the confinement ESFs.

In PSAR Section 6b.2, SHINE described, in detail, the confinement ESF SSCs that will be incorporated into the RPF design. The HVAC and air exhaust systems RVZ1 and RVZ2 are associated with the confinement and are designed to change configuration or operating mode in response to several potential accidents analyzed in Chapter 13b and thereby mitigate its

consequences. They are considered part of the confinement ESF and are discussed in PSAR Section 6b.2. The confinement ESF SSCs are passive and active features designed to mitigate the consequences of accidents and to keep the radiological and chemical exposures to the public, the facility staff, and the environment within acceptable values. PSAR Sections 6b.2 and 9a2.1 provides the details of design, initiation, and operation of confinement ESF SSCs that are provided to mitigate the DBAs discussed in PSAR Section 6b.1. This includes chemical storage areas outside the RCA.

In PSAR Section 6b.3, the applicant states that its nuclear criticality safety program (NCSP) for the design, construction, and operation of the RPF will be consistent with applicable American National Standards Institute/American Nuclear Society (ANSI/ANS) standards as endorsed by Regulatory Guide 3.71, "Nuclear Criticality Safety Standards for Fuels and Material Facilities" (Reference 75). The standards committed to include ANSI/ANS-8.1-1998, "Nuclear Criticality Safety in Operations with Fissionable Materials Outside Reactors," ANS-8.3-1997, "Criticality Accident Alarm System," ANS-8.7-1998, "Nuclear Criticality Safety in the Storage of Fissile Materials," ANS-8.10-1983, "Criteria for Nuclear Criticality Safety Controls in Operations With Shielding and Confinement," ANS-8.20-1991, "Nuclear Criticality Safety Training," ANS-8.21-1995, "Use of Fixed Neutron Absorbers in Nuclear Facilities Outside Reactors," ANS-8.23-2007, "Nuclear Criticality Accident Emergency Planning and Response," ANS-8.24-2007, "Validation of Neutron Transport Methods for Nuclear Criticality Safety Calculations," and ANS-8.26-2007, "Criticality Safety Engineer Training and Qualification Program" (References 62-70).

Commitments related to the design of the facility and its SSCs are described in PSAR Section 6b.3, to ensure that subcriticality will be maintained with an acceptable margin under normal and credible abnormal conditions. These commitments include preference for passive over active engineered controls and engineered over administrative controls; adherence to the double contingency principle (DCP); and performance of documented and independently reviewed NCS evaluations (NCSEs) to identify significant parameters that will be controlled within each process. The dominant controlled parameters are geometry and mass, although interaction and neutron absorption are also mentioned. The NCSEs will be the basis for SSCs and administrative controls relied on to ensure subcriticality. The appropriate margin of subcriticality depends, in part, on using a calculational methodology that is validated for use within a demonstrated area of applicability (AOA). The staff reviewed the licensee's programmatic commitments for the NCSP against the acceptance criteria in ISG Section 6b.3, and determined that it met the guidance applicable to construction. The staff's review of the applicant's computer code validation report is in Section 6b.4.5 of this SER.

6b.3 Regulatory Basis and Acceptance Criteria

The staff reviewed SHINE PSAR Section 6b against applicable regulatory requirements, using appropriate regulatory guidance and standards, to assess the sufficiency of the preliminary design and performance of SHINE's I&C systems for the issuance of a construction permit. In accordance with paragraph (a) of 10 CFR 50.35, "Issuance of Construction Permits," a construction permit authorizing SHINE to proceed with construction may be issued once the following findings have been made:

(1) SHINE has described the proposed design of the facility, including, but not limited to, the principal architectural and engineering criteria for the design, and has identified the major features or components incorporated therein for the protection of the health and safety of the public.

(2) Such further technical or design information as may be required to complete the safety analysis, and which can reasonably be left for later consideration, will be supplied in the FSAR.

(3) Safety features or components, if any, which require research and development have been described by SHINE and a research and development program will be conducted that is reasonably designed to resolve any safety questions associated with such features or components.

(4) On the basis of the foregoing, there is reasonable assurance that: (i) such safety questions will be satisfactorily resolved at or before the latest date stated in the application for completion of construction of the proposed facility, and (ii) taking into consideration the site criteria contained in 10 CFR Part 100, the proposed facility can be constructed and operated at the proposed location without undue risk to the health and safety of the public.

With respect to the last of these findings, the staff notes that the requirements of 10 CFR Part 100 are specific to nuclear power reactors, and therefore not applicable to the SHINE facility. However, the staff evaluated SHINE's site specific conditions using site criteria similar to 10 CFR Part 100, by using the guidance in NUREG--1537. The staff's review evaluated the geography and demography of the site; nearby industrial, transportation, and military facilities; site meteorology; site hydrology; and site geology, seismology, and geotechnical engineering to ensure that issuance of the construction permit will not be inimical to public health and safety.

The staff's evaluation of the preliminary design of SHINE's RPF ESFs does not constitute approval of the safety of any design feature or specification. Such approval will be made following the evaluation of the final design of SHINE's RPF ESFs as described in the FSAR as part of SHINE's operating license application.

6b.3.1 Applicable Regulatory Requirements

The applicable regulatory requirements for the evaluation of SHINE's RPF ESFs are as follows:

- 10 CFR 50.34, "Contents of applications; technical information," paragraph (a), "Preliminary safety analysis report."
- 10 CFR 50.40, "Common Standards."
- 10 CFR 20.1201, "Occupational dose limits for adults."
- 10 CFR 20.1301, "Dose limits for individual members of the public."

In addition to any radiological hazards associated with operations in a production facility, 10 CFR Part 70, Subpart H, "Additional Requirements for Certain Licensees Authorized to Possess a Critical Mass of Special Nuclear Material," specifies limits regarding exposure to hazardous chemicals. Although not a requirement for 10 CFR Part 50 licenses, these limits were considered when reviewing this section of the SHINE PSAR.

6b.3.2 Regulatory Guidance and Acceptance Criteria

In applying guidance and acceptance criteria, the staff used its judgment as to which acceptance criteria were relevant to SHINE's proposed facility, as much of this guidance was originally developed for nuclear reactors. Given the similarities in SHINE's proposed facility and non-power research reactors, the staff used established guidance documents and the Commission's regulations to determine the acceptance criteria for demonstrating compliance with 10 CFR regulatory requirements. For example, the staff used:

- NUREG-1537, Part 1.
- NUREG-1537, Part 2.
- Final ISG Augmenting NUREG-1537, Part 1.
- Final ISG Augmenting NUREG-1537, Part 2.

As stated in the ISG Augmenting NUREG-1537, the staff determined that certain guidance originally developed for heterogeneous non-power research and test reactors is applicable to aqueous homogenous facilities and production facilities. SHINE used this guidance to inform the design of its facility and prepare its PSAR. The staff's use of reactor-based guidance in its evaluation of the SHINE PSAR is consistent with the ISG Augmenting NUREG-1537.

As appropriate, additional guidance (e.g., NRC regulatory guides, IEEE standards, ANSI/ANS standards) has been used in the staff's review of SHINE's PSAR. The use of additional guidance is based on the technical judgment of the reviewer, as well as references in NUREG-1537, Parts 1 and 2; the ISG Augmenting NUREG-1537, Parts 1 and 2; and the SHINE PSAR. Additional guidance documents used to evaluate SHINE's PSAR are provided as references in Appendix B of this SER.

6b.4 Review Procedures, Technical Evaluation, and Evaluation Findings

The staff performed an evaluation of the technical information presented in SHINE PSAR Section 6b, as supplemented by the applicant's responses to RAIs, to assess the sufficiency of the preliminary design and performance of the SHINE RPF ESFs for the issuance of a construction permit, in accordance with 10 CFR 50.35(a). Sufficiency of the preliminary design and performance of the SHINE RPF ESFs is determined by ensuring the design and performance meet applicable regulatory requirements, guidance, and acceptance criteria, as discussed in Section 6b.3, "Regulatory Basis and Acceptance Criteria," of this SER. While the technical evaluation of these systems provided in this section is specific to the SHINE RPF, the staff's review considers the interface of these systems between the IF and RPF as part of a comprehensive technical evaluation. A summary of the results of the staff's technical evaluation is described in Section 6b.5, "Summary and Conclusion."

For the purposes of issuing a construction permit, the preliminary design of the SHINE RPF ESFs may be adequately described at a functional or conceptual level. The staff evaluated the sufficiency of the preliminary design of the SHINE RPF ESFs based on the applicant's design methodology and ability to provide reasonable assurance that the final design will conform to the design bases with adequate margin for safety. As such, the staff's evaluation of the preliminary design of the SHINE RPF ESFs does not constitute approval of the safety of any design feature or specification. Such approval will be made following the evaluation of the final design of the SHINE RPF ESFs, as described in the FSAR, as part of SHINE's operating license application.

6b.4.1 Summary Description

The staff evaluated the sufficiency of SHINE's summary description of its RPF ESFs, as described in SHINE PSAR Section 6b.1, "Summary Description," using the guidance from Section 6.1, "Summary Description," of NUREG-1537, Parts 1 and 2.

In PSAR Section 6b.1, SHINE briefly describes the SSCs that constitute the confinement ESFs in the RPF design and summarizes the postulated accidents whose consequences could be unacceptable without mitigation. As described in greater detail in PSAR Chapter 13b, specific postulated accident scenarios indicate the need for the confinement ESFs. The details of the accident analyses are given in PSAR Chapter 13b, and the detailed discussions of the confinement ESFs in PSAR Section 6b.2. The confinement ESF summary includes the design bases, the performance criteria, and the full range of RPF conditions, including accident conditions, under which the confinement ESF SSCs must maintain function.

According to Chapter 13 of the "Final Interim Staff Guidance [ISG] Augmenting NUREG-1537, Part 1, 'Guidelines for Preparing and Reviewing Applications for the Licensing of Non-Power Reactors: Format and Content," for Licensing Radioisotope Production Facilities and Aqueous Homogeneous Reactors'" (Reference 6), the following DBAs are to be addressed for the RPF:

a. Critical equipment malfunction.
b. Inadvertent nuclear criticality in the RPF.
c. RPF fire.
d. Accidents with hazardous chemicals.
e. External events.

These DBAs encompass loss-of-offsite power (LOOP) and operator errors (See SER Section 13b).

SHINE states that two of the DBAs – b., and e. above – do not have consequences that require mitigation by the confinement ESFs. The remaining two DBAs – a. and d. above – require the confinement ESF SSCs to mitigate consequences.

The confinement ESF SSCs provide active and passive protection against the potential release of radioactive materials or chemicals to the environment following a design basis accident. The confinement ESF SSCs provide for active isolation of piping and HVAC systems penetrating confinement boundaries in certain post-accident conditions.

PSAR Section 6b.2 and its subsections describe the confinement ESF and its modes of initiation and operation, and describe the SSCs in detail. The confinement ESF consists of the following SSCs:

- Hot cells, including penetration seals.
- RCA ventilation system Zone 1 (RVZ1) (including ductwork up to filters and filters) and Zone 2 (RVZ2).
- Bubble-tight isolation dampers.
- Tank vaults.
- Radiological integrated controls system (RICS).
- Isolation valves on piping systems penetrating hot cells.

PSAR Table 6b.2-2, “Radioisotope Production Facility Confinement Safety Functions,” shows the location, basic function, and relationship of the confinement ESF to the facility. The summary description contained enough information for an overall understanding of the function and relationship of the ESF to the operation of the facility.

On the basis of its review, the staff has determined that the summary description of the SHINE RPF ESFs demonstrates an adequate design basis for a preliminary design.

Therefore, the staff finds that the summary description of the SHINE RPF ESFs, as described in SHINE PSAR Section 6b.1, is sufficient and meets the applicable regulatory requirements and guidance for the issuance of a construction permit in accordance with 10 CFR 50.35. Further technical or design information required to complete the safety analysis may reasonably be left for later consideration. The staff will confirm that the final design conforms to the described design basis during the evaluation of SHINE’s FSAR.

6b.4.2 Confinement

The staff evaluated the sufficiency of the preliminary design of the SHINE confinement and related systems as described in SHINE PSAR 6b.2.1, “Confinement,” in part, by reviewing confinement mitigation requirements, the defined confinement envelope, and detailed descriptions of the ESFs associated with confinement. Additionally, the staff evaluated the passive and active ESF components, under normal and upset operational conditions. The functional requirements, design bases, probable subjects of technical specifications, and testing requirements were also evaluated for sufficiency.

Consistent with the review procedures of NUREG-1537, Part 2, Section 6.2.1, “Confinement,” the staff: (1) reviewed the accident scenarios analyzed in PSAR Chapter 13 and evaluated whether the confinement will sufficiently mitigate consequences; (2) reviewed design and functional bases against analyzed accidents; and, (3) compared diffusion and dispersion of released airborne radionuclides. More specifically, the staff evaluated the following elements of SHINE’s confinement:

- Design bases and functional description of the required mitigative features of the confinement ESF SSCs, derived from the accident scenarios.

- Drawings, schematic diagrams, and tables of important design and operating parameters and specifications for the confinement ESF SSCs, including the following:

    - seals, gaskets, filters, and penetrations (e.g., electrical, experimental, air, and water)
    - necessary ESF equipment included as part of the confinement
    - fabrication specifications for essential and safety-related components

- Discussion and analyses, keyed to drawings, of how the structure provides the necessary confinement analyzed in PSAR Chapter 13, with cross reference to other PSAR sections for discussion of normal operations including Section 4b, “Radioisotope Production Facility Description,” and Chapter 11, “Radiation Protection and Waste Management.”

- Discussion of the required limitations on release of confined effluents to the environment.

- Surveillance methods and intervals will be included in the FSAR technical specifications that ensure operability and availability of the confinement ESF SSCs.

In PSAR Section 6b.2, SHINE described in detail the confinement ESF SSCs that will be incorporated into the RPF design. The HVAC and air exhaust systems RVZ1 and RVZ2 are associated with the confinement and are designed to change configuration or operating mode in response to several potential accidents analyzed in Chapter 13b and thereby mitigate its consequences. They are considered part of the confinement ESF and are discussed in PSAR Section 6b.2. The confinement ESF SSCs are passive and active features designed to mitigate the consequences of accidents and to keep the radiological and chemical exposures to the public, the facility staff, and the environment within acceptable values. PSAR Section 6b.2 provides the details of design, initiation, and operation of confinement ESF SSCs that are provided to mitigate the DBAs discussed in PSAR Section 6b.1. This includes chemical storage areas outside the RCA.

Confinement in the radioisotope production facility includes the low-leakage boundary surrounding radioactive or hazardous chemical materials released during an accident, and parts of RVZ1 and RVZ2. The boundary and parts of RVZ1 and RVZ2 localize releases of radioactive or hazardous materials to controlled areas and mitigate the consequences of DBAs. Adequate shielding and RCA ventilation (RV) minimize the hazards normally associated with radioactive or chemical materials. A design objective of confinement is to minimize reliance on administrative or complex active engineering controls and provide a confinement system that is as simple and fail-safe as reasonably possible.

The RPF confinement areas include hot cell enclosures for process operations and trench and vault enclosures for process tanks and piping. Confinement is achieved through RV, RICS, and biological shielding provided by the steel and concrete structures comprising the walls, roofs, and penetrations of the hot cells. Shielding of the hot cells is discussed in detail in PSAR Section 4b.2.

The RV serving the RCA, outside of the IF, includes components whose functions are designated as nonsafety-related and safety-related. The ductwork, the isolation dampers, and the filter trains of RVZ1 are designated as safety-related.

The hot cells employ a combination passive-active confinement methodology. During normal operation, passive confinement is achieved through the contiguous boundary between the hazardous materials and the surrounding environment and is credited with confining the hazards generated as a result of DBAs.

This boundary includes the biological shield (created by the physical construction of the cell itself) and the extension of that boundary through the RVZ1. The intent of the passive boundary is to confine hazardous materials while also preventing the introduction of external energy sources that could disturb the hazardous materials from their steady-state condition. The extent of this passive confinement boundary extends from the upstream side of the intake high efficiency particulate air (HEPA) filter to the final downstream HEPA filter prior to exiting the building.

In the event of a DBA that results in a release inside the hot cells, radioactive material would be confined by the biological shield and physical walls of the cell itself. Each line that connects directly to the hot cell atmosphere and penetrates the hot cell is provided with redundant isolation valves to prevent releases of gaseous or other airborne radioactive material. Confinement isolation valves on piping penetrating the hot cell are located as close as practical to the confinement boundary and active isolation valves are designed to take the position that provides greater safety upon loss of actuating power.

To mitigate the consequences of an uncontrolled release occurring within a hot cell, as well as the off-site consequences of releasing fission products through the ventilation system, the confinement barrier utilizes an active component in the form of bubble-tight isolation dampers (safety-related) on the inlet and outlet ventilation ports of each hot cell. This ESF effectively reduces the amount of ductwork in the confinement volume that needs to remain intact to achieve hot cell confinement. These dampers close automatically (fail-closed) upon loss of power or receipt of a confinement isolation signal generated by the RICS. Following an initiating event, the RICS isolates the hot cells. Additional detail on the RICS is provided in PSAR Section 7b.

However, in the discussion of SHINE's mitigative effects, the staff noted the absence of a confinement ESF effectiveness comparison. Therefore, the staff issued RAI 6b.2-6 (Reference 14) requesting that SHINE provide a mitigative study of the confinement ESF effectiveness. This information was necessary for the staff to determine that SHINE had met the acceptance criteria of NUREG-1537, Part 2, Section 6.2.1, which states, that "[t]he discussion of mitigative effects should contain a comparison of potential radiological exposures to the facility staff and the public with and without the ESF."

In response to RAI 6b.2-6 (Reference 21), SHINE provided a comparative study of the ESFs for mitigating RPF DBAs, as presented in Table 6b.2-6-1, "Comparison of Unmitigated and Mitigated Radiological Doses for RPF DBAs." For unmitigated consequences, SHINE only credited the bubble-tight isolation dampers, assuming none of the active ESFs are functioning.

Table 6b.2-6-1. Comparison of Unmitigated and Mitigated Radiological Doses for RPF DBAs

Event	Unmitigated Public Dose (rem)				Mitigated Public Dose (rem)			
	Site Boundary		Nearest Resident		Site Boundary		Nearest Resident	
	TEDE	Thyroid	TEDE	Thyroid	TEDE	Thyroid	TEDE	Thyroid
Release of Inventory Stored in NGRS Storage Tanks (RPF MHA)	8.20×10^{-1}	---	1.15×10^{-1}	---	8.20×10^{-2}	---	1.15×10^{-2}	---
Critical Equipment Malfunction: Loss of Piping or Tank Integrity	2.19×10^{-1}	1.58	3.06×10^{-2}	2.21×10^{-1}	2.19×10^{-3}	1.58×10^{-2}	3.06×10^{-4}	2.21×10^{-3}
Critical Equipment Malfunction: Inadvertent Release from NGRS	8.17×10^{-1}	---	1.14×10^{-1}	---	8.17×10^{-2}	---	1.14×10^{-2}	---
RPF Fire	8.77×10^{-3}	1.60×10^{-1}	1.23×10^{-3}	2.24×10^{-2}	8.77×10^{-4}	1.60×10^{-2}	1.23×10^{-4}	2.24×10^{-3}

The staff finds this response satisfies the acceptance criteria of NUREG-1537, Part 2, Section 6.2.1 and demonstrates adequate design criteria for a preliminary design. The staff will confirm that the final design conforms to this design basis during the evaluation of SHINE's FSAR.

Overall performance assurance of the active confinement components at the SHINE facility is achieved through factory testing and in-place testing. Duct and housing leak tests will be performed consistent with ASME N511, "Standard for In-Service Testing of Nuclear Air Treatment, Heating, Ventilating, and Air Conditioning Systems" (Reference 73), with minimum acceptance criteria as specified in ASME AG-1-2009, "Code on Nuclear Air and Gas Treatment."

Active confinement components are designed to fail into a safe state if conditions such as loss of signal, loss of power, or adverse environments are experienced. Mechanical, instrumentation, and electrical systems and components required to perform their intended safety function in the event of a single failure, are designed to include sufficient redundancy and independence such that a single failure of any active component does not result in a loss of the capability of the system to perform its safety functions.

Mechanical, instrumentation, and electrical systems and components are designed to ensure that a single failure, in conjunction with an initiating event, does not result in the loss of the system's ability to perform its intended safety function. The single failure considered is a random failure and any consequential failures in addition to the initiating event for which the system is required and any failures that are a direct or consequential result of the initiating event.

The design of safety-related systems (including protection systems) is consistent with IEEE Standard 379-2000, "IEEE Standard Application of the Single-Failure Criterion to Nuclear Power Generating Station Safety Systems" (Reference 71), and NRC Regulatory Guide 1.53, Revision 2, "Application of the Single-Failure Criterion to Nuclear Power Plant Protection Systems" (Reference 72), in the application of the single-failure criterion.

The following components are associated with the confinement barriers of the hot cells, tank vaults and pipe trenches, as described in PSAR Section 6b. Their specific materials, construction, and installation and operating requirements are evaluated based on the safety analysis.

Bubble-tight isolation dampers, designed, constructed and tested consistent with ASME AG-1-2009, Section DA, "Dampers and Louvers":

- Maintain their functional integrity.
- Maintain their rated leak-tightness following a seismic event.
- Maintain their structural integrity under fan shut-off pressure.
- Provide bubble-tight isolation upon receipt of a control signal or, in the event of loss of actuator power, by closure of actuator.

- Provide bubble-tight isolation when using manual actuator or when locked closed with power actuator removed.

- Relay damper full-open and full-closed position for control and indication by the use of limit switches.

Dampers will be butterfly type, blade and frame fabricated of heavy-gage stainless steel. Total leakage is based on bubble solution test as outlined in ASME AG-1-2009, Section DA-5141.

Ventilation ductwork and ductwork support materials will meet the requirements of ASME AG-1-2009, Article SA-3000, "Materials." Supports are designed and fabricated consistent with the requirements of ASME AG-1-2009, Section SA, "Ductwork."

Low leakage seals will be provided on each penetration through the hot cells. For systems open to the hot cell atmosphere, redundant isolation valves will be provided.

The ESFs will be tested to ensure that ESF components will maintain operability and can provide adequate confidence that the system will perform satisfactorily in service during postulated events. In reviewing SHINE's ESF testing, the staff determined that additional information was needed in order to satisfy the criteria of NUREG-1537, Part 1, Section 6.2.1, which states, in part, that "[p]eriodic functional testing of damper closure, room isolation, minimum airflow rates, automatic system shutdown and startup, and activation setpoints should be required and specified." Therefore, in RAI 6b.2-11 (Reference 14), the staff requested, in part, that SHINE describe preoperational and post-commissioning testing for ESF components.

In response to this RAI (Reference 20), SHINE provided the following list of planned preoperational and post-commissioning tests for ESF components:

- Penetration seals, isolation valves, bubble-tight isolation dampers, gloveboxes, and other components that are relied upon to maintain the confinement boundary will be leak tested.

- Isolation valves, bubble-tight dampers, and other equipment relied upon to change position in response to an ESFAS signal will be tested for freedom of movement and correct position indication in response to manual and automatic ESFAS signals.

- Additional testing will be conducted based on applicable vendor recommendations.

- Intervals of testing will be included in the TS and may be based on factors such as manufacturer recommendations, industry operating experience, equipment reliability, or plant risk.

The staff finds this response satisfies the acceptance criteria of NUREG-1537, Part 2, Section 6.2.1 and demonstrates adequate design basis for a preliminary design. The staff will confirm that the final design conforms to this design basis during the evaluation of SHINE's FSAR.

To the extent possible, the RICS and the confinement ESF whose operation it initiates, will be designed to permit testing during plant operation. Testing actuation devices and actuated equipment may be done individually or in groups to avoid negative impact to plant operations.

The design basis of the RVZ1 and RVZ2 are discussed in PSAR Section 9a2.1.1. The design basis of the hot cells is discussed in PSAR Section 4b.2. The ESF-related design basis of the RICS is discussed in PSAR Section 7b.4.1.

NRC staff determined that the need for the specified confinement ESF has been properly identified. The confinement ESF will not interfere with normal operations or safe RPF shutdown. The confinement ESF design features ensure that the system is available and operable when it is required for mitigating accident consequences. The minimum design goal of the confinement ESFs is to reduce below regulatory limits the potential radiological and chemical exposures to the facility staff and members of the public for the accidents discussed at the beginning of this chapter for the radioisotope production facility. The design of the confinement does not transfer radiological risk to the health and safety of the public in order to reduce potential exposures to the facility staff.

PSAR Section 6b shows that the confinement ESF reduces predicted radiological exposures and releases from applicable potential accidents to acceptable levels. The staff examined all accident scenarios analyzed in PSAR Section 13b that could lead to significant radiological or chemical exposures or releases and verified that consequences can be sufficiently mitigated by the confinement ESF. The staff confirmed that the design and functional bases of the confinement ESF are derived from the accidents analyzed. The staff compared the dispersion and diffusion of released airborne radionuclides discussed in PSAR Chapters 6 and 13, with methods described in PSAR Chapter 11, as applicable.

The staff determined that PSAR Section 13b contains sufficient information to conclude that scenarios for all potential accidents at the radioisotope production facility, with consequences greater than the design bases, have been analyzed by the applicant. Mitigation of consequences by a confinement system has been proposed in the PSAR analyses for any accident that could lead to potential unacceptable radiological or chemical exposures to the public, the facility staff, or the environment. The staff reviewed the designs and functional descriptions of the confinement ESF; the designs and functional descriptions reasonably ensure that accident consequences will be limited to the levels found acceptable in the accident analyses of PSAR Section 13b. The staff concluded that the designs and functional descriptions of the confinement ESF reasonably ensure that control of radiological and chemical exposures or releases during normal operation will not be degraded by the ESF. The staff determined that the radiological consequences from accidents to the public, the environment, and the facility staff will be reduced by the confinement ESF to values that do not exceed the applicable limits of 10 CFR Part 20 and the chemical exposure criteria specified in PSAR Section 3.5b.

On the basis of its review, the staff has determined that the level of detail provided on confinement is adequate and supports the preliminary design and satisfied the applicable acceptance criteria of NUREG-1537, Part 2, Section 6.2.1, allowing the staff to make the following relevant findings:

(1) The scenarios for potential accidents at the facility have been analyzed by the applicant and reviewed by the staff. Mitigation of consequences by a confinement system has been proposed in the SAR analyses for any accident that could lead to potential unacceptable radiological exposures to the public, the facility staff, or the environment. The preliminary designs and functional descriptions of the confinement ESF reasonably ensure that the consequences will be limited to the levels found acceptable in the accident analyses of PSAR Chapter 13.

(2) The radiological consequences from accidents to the public, the environment, and the facility staff will be reduced by the proposed confinement ESF to values that do not exceed the applicable limits of 10 CFR Part 20 and are as far below the regulatory limits as can be reasonably achieved.

Therefore, the staff finds that the preliminary design of the SHINE confinement ESFs, as described in PSAR Section 6b.2.1 and supplemented by the applicant's responses to RAIs, is sufficient and meets the applicable regulatory requirements and guidance for the issuance of a construction permit in accordance with 10 CFR 50.35 and 50.34. Further technical or design information required to complete the safety analysis may reasonably be left for later consideration in the FSAR. The staff will confirm that the final design conforms to this design basis during evaluation of SHINE's FSAR.

6b.4.3 Containment

The staff evaluated the sufficiency of SHINE's treatment of containment, as described in SHINE PSAR Section 6b.2.2, "Containment," using the guidance and acceptance criteria of Section 6.2.2, "Containment," of NUREG-1537, Parts 1 and 2. SHINE PSAR Section 6b.2.2 states that the SHINE RPF does not employ a containment feature. Due to the low temperature and power level of facility operations, the safety analysis demonstrates that confinement features are adequate to mitigate potential accidents. PSAR Section 6b.2.1 is provided to describe the use of confinements as an ESF for the RPF.

On the basis of its review, the staff determined that, because SHINE provides a confinement ESF to keep the potential risk to the public from accidents at the RPF low, containment is not required for normal operation or accident mitigation. The safety analyses in PSAR Section 13b show that confinement provides sufficient mitigation for accidents and containment is not necessary.

6b.4.4 Emergency Cooling System

The staff evaluated the sufficiency of SHINE's treatment emergency cooling systems, as described in SHINE PSAR Section 6b.2.3, "Emergency Cooling System," using the guidance and acceptance criteria of Section 6.2.3, "Emergency Core Cooling System." As stated in SHINE PSAR Section 6b.2.3, "[t]here is no emergency cooling system associated with the RPF side of the SHINE facility[.]"

Based on a review of the accident analysis provided in SHINE PSAR Section 13b, the staff finds that there are no accidents requiring emergency cooling, and therefore, an emergency cooling system is not required to mitigate the consequences of an accident in the RPF.

6b.4.5 Nuclear Criticality Safety

The staff evaluated the sufficiency of SHINE's nuclear criticality safety design criteria and methods, as described in SHINE PSAR Section 6b.3, "Nuclear Criticality Safety," and supplemented by the applicant's responses to RAIs, and the applicant's Nuclear Criticality Safety (NCS) Manual, computer code validation report, and a sampling of preliminary NCS calculations and evaluations using the guidance and acceptance criteria from Section 6b.3 of the ISG Augmenting NUREG-1537, Part 2, which is based on Chapter 5, "Nuclear Criticality Safety," of NUREG-1520 (Reference 60). Specifically, the pertinent sections of Section 6b.3 of

the ISG Augmenting NUREG-1537, Part 2, are drawn from Section 5.4.3, “Regulatory Acceptance Criteria,” of NUREG-1520, Rev. 1.

Consistent with the review procedures of the ISG Augmenting NUREG-1537, Part 2, Section 6b.3, “Nuclear Criticality Safety,” the staff reviewed the applicant’s NCS program, including organization and administration, management measures, and technical practices, as well as the preliminary criticality safety evaluations. For the purposes of issuing a construction permit, the staff determined that it was not necessary for SHINE’s Nuclear Criticality Safety Program (NCSP) to meet all of the acceptance criteria provided in Section 6b.3 of the ISG Augmenting NUREG-1537, Part 2. The staff’s review of SHINE PSAR Section 6b.3 evaluated adequacy of pertinent commitments to the design of processes within the SHINE RPF.

Since the design and analyses of the SHINE facility are in preliminary stages, the scope of the staff’s evaluation focused on the NCS design criteria and methods that will be utilized to perform NCS analyses and design the facility in a manner to maintain subcriticality of fissile material processes outside of the irradiation facility. This section of the SER pertains to the analysis and design methodologies used to ensure the RPF will remain subcritical under normal and credible abnormal conditions by an acceptable margin. While the staff’s review concluded that the applicant may proceed with construction, additional information is required to confirm the adequacy of the design. Therefore, the staff recommends the inclusion of conditions, described below and listed in Appendix A of this SER, in the SHINE construction permit in order for the staff to confirm the adequacy of the identified safety features and components of the SHINE facility. All conditions of the construction permit must be satisfied prior to the installation of certain components and before the completion of construction. Any such further technical or design information outside of the scope of these construction permit conditions and as may be required to complete the safety analysis of the SHINE facility can reasonably left for later consideration during the evaluation of SHINE’s FSAR, as part of the review of an operating license application.

During the course of reviewing SHINE’s nuclear criticality safety-program, the staff needed additional information to evaluate the adequacy of SHINE’s principal design criteria and design bases, in accordance with the requirements of 10 CFR 50.34(a)(4). Therefore, in RAIs 6b.3-1 through 34 (References 14, 16, and 18), the staff requested that the applicant provide information to satisfy the acceptance criteria of the ISG Augmenting NUREG-1537, Part 2, Section 6b.3. As discussed below, these RAIs covered topics such as SHINE’s treatment of controlled parameters, application of the double-contingency principal, and ability to demonstrate that, under normal and abnormal credible conditions, all nuclear processes remain subcritical.

The applicant commits to including in its design a Criticality Accident Alarm System (CAAS) beginning on page 6b-19 of the PSAR. The applicant stated that the CAAS will be consistent with ANSI/ANS-8.3-1997 as modified by Regulatory Guide 3.71 (Reference 75). The applicant stated the CAAS will be appropriate for the facility for the type of radiation detected, the intervening shielding, and the magnitude of the minimum accident of concern, and that the CAAS will be designed to remain operational during design basis accidents. The applicant further stated that emergency power will be provided to the CAAS via an uninterruptible power supply. While the staff determined that these commitments met the necessary acceptance criteria to allow SHINE to proceed with construction, additional information is needed to confirm the adequacy of the design of the CAAS, including the methods for determining detector placement, consistent with the guidance in the ISG Augmenting NUREG-1537 and in accordance with the requirements of 10 CFR 70.24, prior to the completion of construction.

Specifically, the design must provide reasonable assurance that the CAAS will have the capability of detecting the minimum accident of concern given the shielding designed into the facility.

Therefore, the staff recommends that the construction permit include a condition that requires, prior to the completion of construction, SHINE submit periodic reports to the NRC, at intervals not to exceed 6 months from the date of the construction permit. As described in the proposed permit conditions in Appendix A of this SER, these reports shall provide the technical basis for the design of the CAAS, including a description of the methodology for determining detector placement.

The applicant committed to establishing an NCSP meeting the requirements of ANSI/ANS-8.1-1998 (Reference 62), and ANSI/ANS-8.19-2005 (Reference 76), as well as the other standards listed in SHINE PSAR Section 6.b.3. To ensure subcriticality, the applicant committed to perform a validation of its calculational method consistent with the acceptance criteria listed in the ISG, as discussed in detail below. Using those methods, the applicant stated that it would establish Safety Limits (SLs) for processes in the RPF to meet the DCP with a conservative margin. Limiting Safety System Settings (LSSSs) will be calculated to provide conservative margin below the SL to account for measurement uncertainty, operating characteristics of control systems, and accuracy of control instruments, for each parameter for which an SL is specified and for which monitoring instruments are used. In addition to LSSSs, the applicant will also establish Limiting Conditions for Operations (LCOs) to ensure operations are maintained within safe limits. Further evaluation of SHINE's probable subjects of technical specifications is provided in Section 6b.4.6, "Probable Subjects of Technical Specifications."

On PSAR page 1-4, the applicant states that the RPF is maintained with $k_{eff} \leq 0.95$. Beginning on page 6b-17, the applicant discusses proposed equipment and how SHINE will maintain the process equipment in a subcritical state, based on MCNP analyses. In response to RAI 6b.3-1 (Reference 21), the applicant stated, in part, that it used MCNP to determine preliminary criticality safety limits and does not currently plan to use other methods for determination of criticality safety limits. Staff finds that the commitments to using either ANSI/ANS standards endorsed in RG-3.71 or performing specific analyses using the widely accepted MCNP code to be consistent with NRC guidance and industry practice and therefore acceptable.

In addition to the SLs, LSSSs, and LCOs discussed on pages 14b-2 and 14b-3 of the PSAR, in its response to RAI 6b.3-2 (Reference 21), the applicant stated that administrative controls will be established to ensure that engineered controls and control systems will be designed, implemented, and maintained to ensure they are available and reliable to perform their function when needed. Management measures identified through the accident analysis process, including safety and operating limits, will be included in the Administrative Controls section of the SHINE Technical Specifications (TS) or described in the FSAR and implemented through SHINE procedures. These administrative controls will ensure that safety-related SSCs are available and reliable to perform their functions when needed. Management measures are administrative in nature and may be finalized subsequent to the completion of construction.

The SHINE quality assurance program is described in the SHINE QAPD. This program is intended to ensure the long-term reliability and availability of engineered controls through robust design control, verification, change control, and procurement. The SHINE configuration management program is intended to ensure the design and licensing basis requirements of plant SSCs are properly reflected in plant documents such as drawings, calculations, equipment specifications, procedures, and software, and that these documents properly reflect the physical

plant SSC configuration. SSCs identified as engineered NCS safety controls (geometry, absorbers, etc.) will be designated as safety-related. In response to RAI 6b.3-7 (Reference 21), the applicant stated that the SHINE configuration management program is intended to ensure that criticality safety controls defined in the NCSEs will not be changed without appropriate review by a qualified criticality safety engineer. Procedures will be developed and put in place prior to operation so that personnel will not change NCS controls without proper NCS review.

The change management program will include incorporating NCS controls into operating procedures and equipment drawings and identifying them as such to ensure they are not changed or removed without proper NCS review. Prior to implementing a change, an evaluation must conclude that the entire process will remain subcritical, with an approved margin for safety, under normal and credible accident conditions. Changes to NCS controls will be documented in the appropriate NCSE. In response to RAI 6b.3-2 (Reference 21), the applicant stated that procedures will be developed and put in place prior to operation so that personnel will not change NCS controls without proper NCS review by a qualified person. The applicant stated that changes that involve or could affect SNM will be evaluated under 10 CFR 50.59. This program will permit changes to the facility or procedures as described in the FSAR and the conduct of tests or experiments not described in the FSAR if prior NRC approval pursuant to 10 CFR 50.90 is not required. Such changes include new or modified SSCs, computer programs, processes, operating procedures, and administrative controls. In Table 6b.3-2, the applicant identifies configuration control and change management as required NCS program elements. The above process for NCS change management is consistent with the endorsed standard ANSI/ANS-8.19-1996 (Reference76), and is therefore acceptable to the staff.

Staff finds the applicant's commitments to using the NCS program to establish and maintain NCS safety and operating limits, including verification and configuration management to be adequate. The applicant committed to administrative controls (management measures) to ensure that NCS controls are designed, implemented and maintained to ensure they are available and reliable. These commitments meet the guidance in the ISG, and the staff therefore finds them acceptable. The staff will verify SHINE's fulfillment of these conditions in the FSAR.

Because the SHINE facility will be licensed under 10 CFR Part 50, the performance requirements in 10 CFR 70.61 do not explicitly apply. However, as described in Section 6b of the ISG Augmenting NUREG-1537, the NRC staff determined that the performance requirements of 10 CFR 70.61 can be used to demonstrate adequate safety for an RPF. These requirements ensure subcriticality under normal and credible abnormal conditions and are drawn from ANSI/ANS-8.1-1998. Therefore, the staff concluded that there is a need to define what is considered a credible criticality scenario and, consistent with risk-informed regulation, define acceptable risk to the public for credible scenarios. Page 1-4 of the PSAR states, in part, that safety-related SSCs "will assure…that the potential for an inadvertent criticality is not credible." This was clarified in the applicant's response to RAI 6b.3-25 (Reference 25) to mean that SSC's will be utilized to ensure credible criticality sequences will be "highly unlikely." In the response to RAI 13b.1-1, the applicant established, in Table 13b.1-1-2, "Likelihood Index Limit Guidelines", an event frequency associated with highly unlikely consistent with the values found in NUREG-1520 (Reference 60). In response to RAIs 6b.3-3 and 6b.3-25, the applicant provided the basis for considering a criticality sequence to be "not credible" consistent with the three criteria found on page 3-27 of NUREG-1520, Revision 1. Therefore, the staff finds the applicant's definition of the terms "not credible, unlikely, and highly unlikely" to be acceptable.

While the staff finds SHINE's method of determination of "not credible" criticality sequences is sufficient to proceed with construction, additional information is necessary to confirm the adequacy of SHINE's analysis of criticality sequences prior to the completion of construction. Specifically, SHINE's analysis needs to provide the technical justification for its designations of "not credible" criticality sequences (e.g., accumulations of uranium in the process ventilation system and intermixing of neutron driver deuterium in SNM processes), such that all relevant process hazards have been adequately considered.

Therefore, the staff recommends that prior to the completion of construction, SHINE shall submit periodic reports to the NRC, at intervals not to exceed 6 months from the date of the construction permit. As described in the proposed permit conditions in Appendix A of this SER, these reports shall provide the basis for determining that criticality events are "not credible" for RPF processes even though fissile materials may be present.

The ISG for NUREG-1537, Part 2, includes acceptance criteria for technical practices to ensure that sufficient NCS controls developed in NCSEs are identified for each process. The staff considers the technical practices for each controlled parameter and associated design criteria, including the preferred hierarchy of controls, to be part of the design basis of the proposed facility.

On page 1-4 of the PSAR, the applicant commits that, for operations in the RPF, the facility is designed to meet the requirements of ANSI/ANS-8.1-1998 (Reference 62), including adherence to the double contingency principle. The double contingency principle states "process design should incorporate sufficient factors of safety to require at least two unlikely, independent, and concurrent changes in process conditions before a criticality accident is possible." The applicant stated that each process that has criticality accident sequences meets the double contingency principle. In response to RAI 6b.3-13 (Reference 21), the applicant stated that there are currently no planned exceptions to compliance with the double contingency principle. In its response to RAI 6.3-14 (Reference 21), the applicant stated that when a single NCS control is capable of controlling two or more criticality controlled parameters, another control will be identified to provide double contingency protection.

In response to RAI 6b.3-10 (Reference 21), the applicant revised its discussion that tank 1-TSPS-01T met double contingency through geometry and concentration after the staff had determined that concentration was not an independent control for the tank. The applicant also stated that double contingency is met by geometry and the configuration management program. However, configuration management is not an independent control as it simply ensures the availability of the geometry control. In response to RAIs 6b.3-24 and 6b.3-30 (Reference 25 and Reference 29), the applicant clarified that double contingency will be satisfied by the tank geometry and the criticality safe sump/drain system should the tank sustain a leak. Acceptable logic for double contingency was also noted in the other accident sequences in the NCSE provided in response to RAI 6b.3-30.

Based on SHINE's responses to these RAIs, the staff finds that the applicant's commitments to the double contingency principle are adequate, but that verification of its proper implementation should be addressed consistent with the proposed construction permit conditions as the design is finalized.

The applicant committed to ANSI/ANS-8.1-1998 (Reference 62), which requires that processes be shown to be subcritical under normal and credible abnormal conditions. Obtaining

reasonable assurance that processes will be subcritical requires that calculational methods be validated against experimental data and an acceptable margin of subcriticality provided. Ensuring subcriticality with an acceptable margin is part of the design basis for the RPF. Determining the bias, uncertainty in the bias, and an administrative margin are all necessary tasks in setting a USL that ensures an adequate margin of subcriticality. For the purpose of demonstrating subcriticality, the calculated k_{eff} must satisfy $k_{eff} + 2\sigma \leq USL$, where σ is the calculated standard deviation. On page 6b-11 of the PSAR, the applicant stated that the facility will be designed to meet ANSI/ANS-8.24-2007 (Reference 69). The applicant proposed use of an administrative margin of subcriticality (MoS) for the RPF of 0.05. The stated basis for this choice of MoS was the ISG for NUREG-1537, Part 2.

Staff reviewed the validation report submitted in response to RAIs 6b.3-23 (Reference 25 and 28) to confirm that the USL determination will adequately address the materials and enrichments that are of concern for criticality safety as well as any bias and uncertainty present in the modeling. The applicant modeled 140 criticality benchmark experiments using MCNP 6.1 and the ENDF/B-VII.1 continuous energy group cross section library. The modeling was performed on the Atkins' Linux computer cluster. The software and hardware are managed with the Atkins NS System's configuration control. The results of the modeled experiments were compiled and analyzed consistent with methods outlined in NUREG/CR-6698, "Guide for Validation of Nuclear Criticality Safety Calculational Methodology" (Reference 77). Using this guidance, the staff verified the applicant's correct application of statistical methodology.

In addition, the staff noted that the experiments selected for the validation had limited data for the specific enrichment used in the calculations (21wt% ^{235}U) and for one particular material type (uranyl sulfate). With regard to sulfur, staff used the TSUNAMI sensitivity/uncertainty module in the SCALE-6.1 code package to determine the sensitivity of k_{eff} to sulfur cross section uncertainties as a function of enrichment in various benchmarks included in the validation report. Staff determined that sulfur has, at most, a minor effect on system reactivity and has a very low integral sensitivity coefficient as compared to other nuclides in the benchmarks. A similar evaluation was done for boron, which was included in the area of applicability (AOA) definition table but appeared to be underrepresented in the benchmark experiments, with similar results. In both cases, staff determined that uranium sulfate and boron were adequately represented in the experiments chosen for benchmarks.

The applicant evaluated its selected 140 benchmarked experiments in three separate data sets: intermediate enriched uranium (14.7 to 36 wt% ^{235}U), low to intermediate enriched uranium (10 to 36 wt% ^{235}U), and low to high enriched uranium (10 to 94 wt% ^{235}U). The applicant noted that only 4 of 54 experiments in the intermediate enriched uranium data set were less than 30 wt% ^{235}U and, as such, the combined 84 low and intermediate enriched experiments were considered to more accurately bound the SHINE enrichment and materials. The combined data set evaluated all 140 benchmark experiments together. When evaluating the data, the applicant set positive biases to zero in calculating the USL, consistent with the guidance in NUREG/CR-6698.

The applicant initially included four experiments from the IEU-SOL-THERM-001 data set in its validation benchmark suite. Whereas most of the benchmarks analyzed had either a small positive bias (overestimating the experimental k_{eff}) or at worst a very slight negative bias (underestimating the experimental k_{eff}), the 4 benchmarks from the IEU-SOL-THERM-001 benchmark set had a negative bias of up 2.9 percent in k_{eff}. The applicant subsequently considered the benchmark set to be unreliable and dropped the 4 benchmarks from its validation as being outliers. Staff noted that the applicant committed to the validation

methodology in ANSI/ANS-8.24-2007 (Reference 69), to which the NRC took two exceptions in Regulatory Guide 3.71 (Reference 75). With regard to dismissal of outliers, Regulatory Guide 3.71 states, in part, that "rejection of outliers should be based only on the inconsistency of the data with known physical behavior, rather than on statistical methods ... The rejection of outliers, without a physical basis for doing so, may lead to a failure to consider all available information on possible contributions to the bias." Although questions had been raised concerning the benchmark evaluation for this data set (International Handbook of Evaluated Criticality Safety Benchmark Experiments (IHECSBE)), the reason for the observed negative bias was not confirmed. In response to RAI 6b.3-34 (Reference 101), the applicant initially indicated there was a likely discrepancy in the specification of the critical volume in the benchmark evaluation that could explain the calculated negative bias. The applicant stated that it had been in contact with the International Criticality Safety Benchmark Evaluation Project (ICSBEP) staff and stated that the ICSBEP staff was not currently recommending IEU-SOL-THERM-001 for use in validation pending more detailed investigation of the apparent error. However, the applicant subsequently revised its response to RAI 6b.3-34, and clarified that the discrepancy appeared to be in the benchmark model used, and not in the experiment. Therefore, consistent with the above criteria in Regulatory Guide 3.71, the four IEU-SOL-THERM-001 experiments are no longer considered outliers and will be included in a future revision to the validation because they reflect materials most similar to those used at the SHINE facility. Pending revision of the validation report to include the four experiments, SHINE committed to increase its minimum margin of subcriticality to 0.06 to bound any possible reduction in the USL resulting from the inclusion of these experiments. The staff's independent analysis using the USLSTATS module from the SCALE computer code indicated the inclusion of the four benchmarks, as originally modeled, reduced the overall USL by approximately 0.8 percent. Therefore, the additional 1 percent subcritical margin would be sufficient to bound the effect once the four benchmarks are reevaluated, and SHINE's response to the RAI is therefore acceptable.

The USL determination for each data set is shown in Table 5 of the current validation report (Atkins-NS-DAC-SHN-15-03, Rev. 1) without the four IEU-SOL-THERM-001 benchmarks included, and is repeated below:

Table 6b-1. Summary of USL Determination

Enrichment	Bias	Bias Uncertainty	USL
Intermediate	0.0025	0.0109	0.9391
Low to Intermediate	0.0020	0.0078	0.9422
Low, Intermediate, High	0.0011	0.0091	0.9409

The applicant established the USL for RPF operations as the USL for the intermediate enrichment data set. The applicant considered this to be a conservative choice, since that was the lowest USL for all the data sets considered. The staff considers this the most appropriate choice because it is the intermediate enrichment range that most closely corresponds to the proposed SHINE activities. The applicant then established the area of applicability (AOA) of the benchmarks in Table 9 of the validation report (recreated below in Table 6b-2) using the full data set of 140 benchmark experiments, with the exception that it limited the enrichment range to that of the intermediate enrichment cases. The staff performed additional analysis using the TSUNAMI code to determine the sensitivity of the benchmark correlation to variations in the enrichment. Based on its analysis, the staff determined that benchmarks across the entire combined enrichment range would be applicable for validation. In addition, the staff compared the AOAs determined using each of the three data sets and determined that there were no

significant differences when only the intermediate enrichment data was included. Therefore, the staff finds the applicant's methods for determination of the USL and AOA acceptable.

Staff noted that Section 6b.3 of the PSAR did not include the technical practices for each controlled parameter as described on pages 72 – 74 of the ISG for NUREG-1537, Part 2. The technical practices, which describe requirements for the use of each controlled parameter (both in establishing controls for the parameter and for modeling it in criticality analysis), are part of the principal design criteria for the RFP. The margin provided by conservatively modeling controlled parameters is part of the overall margin of subcriticality that gives reasonable assurance that all processes will be subcritical under normal and credible abnormal conditions. Initially, the details of how NCSEs will handle the controlled parameters were not included in the PSAR, and not included in the NCS Manual submitted in response to RAI 6b.3-30 (Reference 29) The applicant did submit some representative analysis (discussed below) that illustrated how the parameters were dealt with in specific cases, but these were not reviewed in detail. Therefore, additional information was requested, and in response to RAI 6b.3-31 (Reference 101), the applicant subsequently committed to meet the acceptance criteria for the use of each parameter in the ISG, and thus adequately responded to the staff's requests for additional information on this subject.

Table 6b-2. Area of Applicability Summary

Parameter	Area of Applicability
Fissile Material	UO_2, UH_3, Metal, $UO_2(NO_3)_2$, UF_4, U-ZrH, UO_2F_2, U_xO_y, UO_2SO_4
Fissile Material Form	Solid and Solution
$H/^{235}U$ ratio	$0 \leq H/^{235}U \leq 1400$
Average Neutron Energy Causing Fission (MeV)	0.0027 < ANECF < 1.46
Enrichment	10 to 36 wt% ^{235}U
Moderating Materials	None, Water, Nitric Acid, Sulfuric Acid, Hydrocarbon, CF_2
Reflecting Materials	None, Water, Concrete, BeO, Hydrocarbon Material, Iron, Graphite
Absorber Materials	Boron, Aluminum, Steel, Stainless Steel, Hydrocarbon Material
Geometry	Homogenous and Heterogeneous Spheres, Hemispheres, Cylinders, Cuboids, Single Unit and Arrays

The staff noted that Section 6b.3 of the PSAR did not include the technical practices for each controlled parameter as described on pages 72 – 74 of the ISG for NUREG-1537, Part 2. The technical practices, which describe requirements for the use of each controlled parameter (both in establishing controls for the parameter and for modeling it in criticality analysis), are part of the principal design criteria for the RFP. The margin provided by conservatively modeling controlled parameters is part of the overall margin of subcriticality that gives reasonable assurance that all processes will be subcritical under normal and credible abnormal conditions. Initially, the details of how NCSEs will handle the controlled parameters was absent from the PSAR, and was not included in the NCS Manual submitted in response to RAI 6b.3-30 (Reference 29). The applicant did submit some representative analysis (discussed below) that illustrated how the parameters were dealt with in specific cases, but these were not reviewed in detail. Therefore, additional information was requested, and in response to RAI 6b.3-31 (Reference 101), the applicant subsequently committed to meet the acceptance criteria for the use of each parameter in the ISG, and thus adequately responded to the staff's requests for additional information on this subject.

On page 6b-12 of the PSAR, the applicant stated that heterogeneous effects are not considered applicable because the uranium enrichment is less than 20 wt%. In the response to RAI 6b.3-6 (Reference 21), the applicant elaborates by quoting LA-12808, "Nuclear Criticality Safety Guide," such that heterogeneous effects can be ignored for uranium above 6 percent enrichment. Staff concluded that this response was insufficient as some guidance, specifically, Figures 22 through 25 of LA-10860-MS, "Critical Dimensions of Systems Containing U-235, Pu-239, and U-233," showed heterogeneity can have effects at greater than 6 percent enrichment. Therefore, additional information was requested, and in response to RAI 6.3-27 (Reference 25), the applicant stated it will consider heterogeneity effects when establishing NCS controls and limits, where such are credible and relevant. Staff finds SHINE's commitment to the consideration of heterogeneity acceptable to develop the NCS controls and limits to be provided in the FSAR. The staff will confirm that SHINE adequately considers heterogeneity in NCS controls and limits in the evaluation of SHINE's FSAR.

In response to RAI 6b.3-16 (Reference 21), the applicant stated that specifics of mass control have not yet been defined and will be determined as part of the detailed design. However, it stated that if mass is used as a controlled parameter, determinations of mass will be based on either weighing the material and assuming the entire mass is SNM or conducting physical measurements to establish the actual weight percent of SNM in the material. The staff finds these are consistent with the commitments for mass control in the ISG Augmenting NUREG-1537, and are therefore acceptable.

The applicant's response to RAI 6b.3-17 (Reference 21) stated that preliminary criticality scoping safety assessments assume theoretical densities of dry and moderated fissile solids and that SHINE does not anticipate utilizing density as a control for criticality safety purposes. The staff finds the applicant's commitments regarding density controls to be consistent with the guidance in the ISG Augmenting NUREG-1537, and therefore acceptable.

The applicant's response to RAI 6b.3-18 (Reference 21) stated that SHINE plans to assume an enrichment of 21 percent to conservatively address uranium enrichment. In response to RAI 6b.3-29 (Reference 25), the applicant stated that enrichment will be independently verified upon receipt. The details of how enrichment is verified will be determined prior to operation. Because the material should be, generally, slightly less than 20 percent enriched, the enrichment will not be further controlled throughout the facility design. The staff finds that these details are not necessary for construction and may be reasonably left for consideration in SHINE's operating license application.

The applicant's response to RAI 6b.3-19 (Reference 21) stated that preliminary criticality safety assessments have been performed using worst-case credible reflection conditions and that reflection will not be a controlled parameter. The staff finds the applicant's commitments regarding reflection to be consistent with the guidance in the ISG Augmenting NUREG-1537, and therefore acceptable.

In response to RAI 6b.3-8 (Reference 21), the applicant stated that preliminary criticality scoping safety assessments include optimum moderation conditions. In response to RAI 6b.3-28 (Reference 25), the applicant states that if it uses moderation as a controlled parameter, it will meet the acceptance criteria outlined in NUREG-1520. The staff finds the applicant's commitments regarding moderation as a controlled parameter to be consistent with the guidance, and therefore acceptable.

In response to RAI 6b.3-9 (Reference 21), the applicant stated that preliminary criticality scoping safety assessments have been performed at optimum concentration, with the exception of the evaluation for the liquid waste processing tanks. The liquid waste processing tanks are the only tanks or vessels at the SHINE facility that are not criticality-safe by geometry where fissionable material exists outside the TSV. The staff finds this response to be acceptable because these tanks are not expected to ever contain an appreciable amount of fissionable material. SHINE will apply limits on uranium concentration to these tanks to ensure that uranium-bearing solution which exceeds the NCS limit is prevented from entering non-favorable geometry vessels.

On page 6b-16 of the PSAR, the applicant states that interaction may be used as a controlled parameter if engineered controls are used to maintain minimum separation. Enhanced administrative controls are used where engineered controls are not feasible. In response to RAI 6b.3-10 (Reference 21), the applicant stated that preliminary criticality scoping safety assessments use interaction control in conjunction with geometry control related to arrays of cylindrical tanks and storage rack arrays. These geometric designs control the spacing between storage locations in racks and the spacing of tanks containing fissile material. The structural integrity of the features will be designed such that proper spacing between fissile material units is maintained during normal and credible abnormal conditions. The staff concludes that these commitments are consistent with guidance in the ISG Augmenting NUREG-1537, and the staff therefore finds them acceptable.

On page 6b-16, the applicant states that use of neutron absorption as a controlled parameter is acceptable by following ANSI/ANS-8.21-1995 (Reference 67). Neutron spectra will be considered in the evaluation of absorber effectiveness. The applicant does not commit to ANSI/ANS-8.5-1986 as it does not anticipate using raschig rings. As such, staff finds the applicant's commitments regarding neutron absorption as a control to be consistent with the guidance in the ISG Augmenting NUREG-1537, and therefore acceptable.

In response to RAI 6b.3-21 (Reference 21), the applicant stated that the preliminary criticality scoping safety assessments use volume control as a controlled parameter. Volume control entails assuming an optimum concentration in a spherical geometry of fissile material, as well as full water reflection and allows for criticality safety to be demonstrated without regard to geometric shape. These commitments are consistent with guidance in the ISG and the staff therefore finds them acceptable.

The applicant did make several additional commitments in its PSAR regarding implementation of the various controlled parameters. Page 1-4 of the PSAR describes the preferred hierarchy of controls as follows:

a) The facility and equipment is designed so that significant quantities of fissionable material cannot be placed in a favorable configuration for criticality.
b) Engineered controls.
c) Administrative controls (e.g., limitations on allowed movements and processes involving special nuclear material [SNM]).

Page 6b-11 contains an essentially equivalent list:

a) Passive engineered.
b) Active engineered.
c) Enhanced administrative.
d) Simple administrative.

The two lists are equivalent, as geometry is almost always controlled passively, and therefore incorporates both the preference for passive control and preferred reliance on geometry. The lists are consistent with the guidance in the ISG Augmenting NUREG-1537, Part 2, and therefore the staff finds these commitments acceptable. The staff will verify SHINE's commitments to using volume as a controlled parameter in the evaluation of SHINE's FSAR.

The applicant submitted the following NCS analyses and calculations in the form of preliminary criticality scoping safety assessments. The NCS analyses and calculations do not necessarily contain all elements that would be required for construction and operation of the facility. It is anticipated that additional hazards and controls will be identified as the facility and process design develops. The analyses submitted were:

- ATKINS-NS-DAC-SHN-15-04, Rev. 0, "Single Parameter Subcritical Limits for Homogeneous 21 wt% 235U Uranyl Sulfate, Uranium Oxide, and Uranium Metal."

- ATKINS-NS-DAC-SHN-15-2, Rev. 0, "Criticality Safety Calculations for the Preliminary Design of Annular Tanks for the SHINE Medical Isotope Facility."

- ATKINS-NS-TR-SHN-15-06, Rev. 1, "Criticality Safety Evaluation for the SHINE Target Solution Preparation System."

The staff determined that a detailed review of these preliminary analyses was not necessary for the issuance of a construction permit, and therefore did verify that the NCS calculations fell within the AOA established in the validation report. However, due to SHINE's preferential reliance on passive engineered NCS features, additional information is necessary to confirm the adequacy of the implementation of SHINE's NCS design criteria prior to the completion of construction. Specifically, SHINE's RPF design must provide reasonable assurance that all RPF processes will remain subcritical under all normal and credible abnormal conditions.

Therefore, the staff recommends that the construction permit include a condition that requires that, prior to the completion of construction, SHINE submit periodic reports to the NRC, at intervals not to exceed 6 months from the date of the construction permit. As described in the proposed permit conditions in Appendix A of this SER, these reports shall provide summaries of the criticality safety analysis for the affected processes that include the following: (1) a list of identified criticality hazards, (2) a list of controlled parameters, (3) a description of evaluated normal and abnormal conditions, (4) a description of the licensee's approach to meeting the double contingency principle, and (5) a list of anticipated passive and active engineered controls, including any assumptions, to ensure the process(es) will remain subcritical under normal and credible abnormal conditions.

Following the review of the SHINE's preliminary NCS Manual and a preliminary review of the NCSEs, the staff noted inconsistencies in the applicant's treatment of fissile isotopes other than U-235. Notably, on pages 4b-4 and -5 of the PSAR, the applicant states that small quantities of

Pu-239 and U-233 may be present in recycled target solution. These nuclides are generally accepted as being more reactive than U-235 at thermal neutron energies. However, staff noted that there was no mention of these nuclides in the preliminary NCSEs and NCS manual provided in response to RAI 6b.3-30 (Reference 25 and 29). The staff's modeling of the SHINE systems using the SCALE code determined that inclusion of these nuclides in SHINE's NCS analysis may result in a statistically significant increase in k_{eff}. While the staff finds that SHINE's preliminary NCS analyses and calculations are sufficient to allow SHINE to proceed with construction, due to SHINE's inconsistent treatment of fissile isotopes, additional information is necessary to confirm the adequacy of the implementation of SHINE's NCS design criteria prior to the completion of construction. Specifically, SHINE's RPF design must provide reasonable assurance that all RPF processes will remain subcritical under all normal and credible abnormal conditions.

Therefore, the staff recommends that the construction permit include a condition that requires that, prior to the completion of construction, SHINE submit periodic reports to the NRC, at intervals not to exceed 6 months from the date of the construction permit. As described in the proposed permit conditions in Appendix A of this SER, these reports shall provide the relevant NCSEs that address the reactivity contributions from all fissile isotopes or SHINE shall apply an additional subcritical margin to account for neglecting these nuclides. The treatment of fissile nuclides other than U-235, whether through the NCSEs or the addition of subcritical margin, shall demonstrate that all RPF processes will remain subcritical under all normal and credible abnormal conditions.

On the basis of its review, including the confirmatory permit conditions listed above, the staff finds that the level of detail provided on nuclear criticality safety for the RPF satisfies the applicable acceptance criteria of NUREG-1537, Part 2, Section 6b.3, allowing the staff to make, with reasonable assurance, the following relevant findings, subject to the satisfaction of the permit conditions in this section of the SER:

(1) The applicant will have in place an NCS program.

(2) The applicant will have in place personnel who are qualified to develop, implement, and maintain the NCS program consistent with the facility organization and administration and management measures.

(3) The applicant's conduct of operations will be based on NCS technical practices, which will ensure that the fissile material will be possessed, stored, and used safely.

(4) The applicant will develop, implement, and maintain a criticality accident alarm system that meets applicable acceptance criteria.

Therefore, the staff finds that SHINE's NCS program, as described in PSAR Section 6b.3 and supplemented by the applicant's responses to RAIs, is sufficient and meets the applicable regulatory requirements and guidance for the issuance of a construction permit in accordance with 10 CFR 50.35, subject to the aforementioned conditions. Those safety features and components requiring additional information to confirm adequacy of design have been identified for inclusion as conditions in the SHINE construction permit. The proposed conditions must be satisfied prior to the completion of construction. Further technical or design information outside of the scope of these construction permit conditions and as may be required to complete the

safety analysis of the SHINE facility, including information tracked through regulatory commitments, can reasonably be left for later consideration during the evaluation of SHINE's FSAR, as part of the review of an operating license application.

6b.4.6 Probable Subjects of Technical Specifications

In accordance with 10 CFR 50.34(a)(5), the staff evaluated the sufficiency of the applicant's identification and justification for the selection of those variables, conditions, or other items which are determined to be probable subjects of technical specifications for the SHINE RPF ESFs, with special attention given to those items which may significantly influence the final design.

SHINE PSAR Sections 6b.2.1.6, "Design Bases," 6b.2.4, "Radioisotope Production Facility Engineered Safety Features Technical Specifications," and 6b.3.2, "Technical Specifications," state that potential variables, conditions, or other items that will be probable subjects of a technical specification associated with the RPF confinement systems and components, ESFs, and nuclear criticality safety are provided in SHINE PSAR Chapter 14. However, in Tables 6b.1-1, "Summary of RPF Design Basis Accidents and ESF Provided for Mitigation," 6b.2-1, "Radioisotope Production Facility Design Basis Accident Consequence Determination," 6b.2-2, "Radioisotope Production Facility Confinement Safety Functions," 6b.3-1, "Tanks Subject to Criticality-Safety Controls," and 6b.3-2, "Nuclear Criticality Safety Program Elements and Requirement Bases," SHINE identified structures systems and components, events, and programs likely to be addressed by technical specifications.

In Table 14a2-1, "SHINE Facility Proposed Parameters for Technical Specifications," SHINE identified the criticality safety design, including the condition of criticality safe sumps, and RPF confinement isolation valves as likely to be the subject of LCOs.

In PSAR Section 14b.2.1, "Safety Limits for Processing Irradiated Special Nuclear Material Outside of the Reactor," SHINE stated that "SLs are derived for criticality accident prevention based on the Nuclear Criticality Safety Program, and also from an Integrated Safety Analysis (ISA). Limits are specified, using the double-contingency principal, to avoid a criticality accident. Limits are set with a conservative margin."

In response to RAI 6b.2-9 (Reference 21), the applicant stated the ESF function for both the IF and RPF consists of confinement systems, ventilation systems, and control systems. Post-accident mitigation is accomplished by confinement of radioactive or hazardous material to controlled areas to mitigate the consequences of design basis accidents (DBAs). This confinement occurs by shutting isolation dampers in the ventilation systems or isolation valves in lines penetrating the confinement area when parameters are determined to be outside predefined limits. This function is known as the ESF function. The control systems that perform this function are known as the ESFAS in the IF, and the Radiological Integrated Control System (RICS) in the RPF.

Probable subjects of proposed TS for the IF and RPF ESF confinement systems are provided in PSAR Table 14a2-1, Section 3.4, and are also referenced for the RPF specifically in PSAR Section 14b.3.2. Per PSAR Table 14a2-1, the following Confinement LCOs will be developed:

- TPS glove box system or confinement (IF)
- IU and TOGS shielded cell confinement isolation valves (IF)
- Confinement isolation valves (RPF)

Probable subjects of proposed TS for the IF and RPF ESF ventilation systems are provided in PSAR Table 14a2-1, Section 3.5, and are also referenced for the RPF specifically in PSAR Subsection 14b.3.3. Per PSAR Table 14a2-1, the following LCOs will be developed:

- RVZ1 and RVZ2 isolation dampers (IF and RPF)

Probable subjects of proposed TS for ESF control and actuation are provided in PSAR Table 14a2-1, and are also referenced for the RPF specifically in PSAR Subsections 14b.3.1 and 14b.3.5. Per PSAR Table 14a2-1, the following LCOs will be developed:

- ESFAS input to the TRPS, including the required operable channels per future TS Table 3.2.1 (i.e., TS Table 3.2.1 will include channel(s) monitored, number of channels required, allowable value, nominal setpoint, permissible bypass, or other conditions) (IF).

- RICS (initiates the isolation functions necessary to achieve confinement in the RPF)

The probable subjects of TS for ESF equipment are described above. Specific details related to these probable subjects, such as periodic functional testing of damper closure, room isolation, minimum airflow rates, automatic system shutdown and startup, and activation setpoints will be provided in the SHINE TS, which will be provided as part of the SHINE operating license application.

Based on the information provided in PSAR Chapters 6b and 14, as well as PSAR Table 14a2-1 and supplemented by the response to RAI 6b.2-9, the staff finds that the identification and justification for the selection of those variables, conditions, or other items which are determined to be probable subjects of technical specifications for the SHINE RPF ESFs are sufficient and meet the applicable regulatory requirements and acceptance criteria of NUREG-1537 for the issuance of a construction permit in accordance with 10 CFR 50.35. A detailed evaluation of technical specifications, including LCOs and surveillance requirements, will be performed during the review of the SHINE operating license application.

6b.5 Summary and Conclusions

The staff evaluated the descriptions and discussions of SHINE's RPF ESFs, including probable subjects of technical specifications, as described in SHINE PSAR Section 6b and supplemented by the applicant's response to RAIs, and finds that the preliminary design of SHINE's RPF ESFs, including the principal design criteria; design bases; and information relative to materials of construction, general arrangement, and approximate dimensions: (1) provides reasonable assurance that the final design will conform to the design basis, and (2) meets all applicable regulatory requirements and acceptance criteria in NUREG-1537.

On the basis of these findings and subject to the conditions identified above, the staff has made the following conclusions for the issuance of a construction permit in accordance with 10 CFR 50.35 and 50.40:

(1) SHINE has described the proposed design of the RPF ESF systems, including, but not limited to, the principal architectural and engineering criteria for the design, and has identified the major features or components incorporated therein for the protection of the health and safety of the public.

(2) Further technical or design information required to complete the safety analysis will be supplied in the FSAR.

(3) There is reasonable assurance that: (i) safety questions will be satisfactorily resolved at or before the latest date stated in the application for completion of construction of the proposed facility, and (ii) taking into consideration the site criteria contained in 10 CFR Part 100, the proposed facility can be constructed and operated at the proposed location without undue risk to the health and safety of the public.

(4) There is reasonable assurance: (i) that the construction of the SHINE facility will not endanger the health and safety of the public, and (ii) that construction activities can be conducted in compliance with the Commission's regulations.

(5) The issuance of a permit for the construction of the facility would not be inimical to the common defense and security or to the health and safety of the public.

7.0 INSTRUMENT AND CONTROL SYSTEMS

Instrument and control (I&C) systems comprise the sensors, electronic circuitry, displays, and actuating devices that provide the information and means to safely control the SHINE Medical Technologies, Inc. (SHINE or the applicant) irradiation facility (IF) and radioisotope production facility (RPF) and to avoid or mitigate accidents. Together, the IF and RPF constitute the SHINE facility.

Instruments are provided to monitor, indicate, and record such operating parameters as neutron flux density, target solution temperature, coolant flow and temperature, and radiation intensities in selected areas around the SHINE facility. Certain I&C systems will automatically shut down the SHINE irradiation units (IUs) when a safety parameter reaches a predetermined set point. I&C subsystems may also be designed to actuate engineered safety features (ESFs) upon the detection of abnormal conditions.

This chapter of the SHINE construction permit safety evaluation report (SER) describes the review and evaluation of the U.S. Nuclear Regulatory Commission (NRC) staff (the staff) of the preliminary design of the SHINE IF and RPF I&C systems as presented in Chapter 7, "Instrument and Control Systems," of the SHINE Preliminary Safety Analysis Report (PSAR), as supplemented by the applicant's responses to requests for additional information (RAIs).

7a Irradiation Facility Instrument and Control Systems

SER Section 7a, "Irradiation Facility Instrumentation and Control Systems," provides an evaluation of the preliminary design of SHINE's IF I&C systems as presented in SHINE PSAR Section 7a2, "Irradiation Facility Instrument and Control Systems," within which, SHINE describes the design of I&C systems, target solution vessel (TSV) process control system, TSV reactivity protection system, ESFs, ESF actuation system (ESFAS), control console and display information, and radiation monitoring systems.

7a.1 Areas of Review

The staff reviewed SHINE PSAR Section 7a2 against applicable regulatory requirements using appropriate regulatory guidance and standards to assess the sufficiency of the preliminary design and performance of SHINE's IF I&C systems. As part of this review, the staff evaluated descriptions and discussions of SHINE's IF I&C systems, with special attention to design and operating characteristics, unusual or novel design features, and principal safety considerations. The preliminary design of SHINE's IF I&C systems was evaluated to ensure the sufficiency of principal design criteria, design bases, and information relative to materials of construction, general arrangement, and approximate dimensions sufficient to provide reasonable assurance that the final design will conform to the design basis. In addition, the staff reviewed SHINE's identification and justification for the selection of those variables, conditions, or other items that are determined to be probable subjects of technical specifications for the facility, with special attention given to those items that may significantly influence the final design.

Areas of review for this section included IF I&C control systems, process control descriptions, reactivity protection system, ESFAS, control console and display information, and radiation monitoring systems. Within these review areas, the staff assessed the preliminary analysis of I&C systems needed to monitor key parameters and variables, maintain parameters and

variables within prescribed operating ranges, alert operators when operating ranges are exceeded, assure safety limits are not exceeded, and initiate mitigating systems and components important to safety.

7a.2 Summary of Application

SHINE utilizes independent I&C systems to protect and control the neutron driver and TSV associated with each irradiation unit in the IF. The I&C systems in the IF include reactivity protection systems, reactivity control systems, radiation detection systems, ESFAS, and control room and instrument displays.

SHINE PSAR Section 7a2 provides the preliminary design of the I&C systems, the TSV process control description, the TSV reactivity protection system, the ESFAS, the control console and display information, and the radiation monitoring systems.

7a.3 Regulatory Basis and Acceptance Criteria

The staff reviewed SHINE PSAR Section 7a2 against applicable regulatory requirements, using appropriate regulatory guidance and standards, to assess the sufficiency of the preliminary design and performance of SHINE's I&C systems for the issuance of a construction permit. In accordance with paragraph (a) of Title 10 of the *Code of Federal Regulations* (10 CFR) 50.35, "Issuance of construction permits," a construction permit authorizing SHINE to proceed with construction may be issued once the following findings have been made:

(1) SHINE has described the proposed design of the facility, including, but not limited to, the principal architectural and engineering criteria for the design, and has identified the major features or components incorporated therein for the protection of the health and safety of the public.

(2) Such further technical or design information as may be required to complete the safety evaluation, and which can reasonably be left for later consideration, will be supplied in the final safety analysis report (FSAR).

(3) Safety features or components, if any, which require research and development have been described by SHINE and a research and development program will be conducted that is reasonably designed to resolve any safety questions associated with such features or components.

(4) On the basis of the foregoing, there is reasonable assurance that: (i) such safety questions will be satisfactorily resolved at or before the latest date stated in the application for completion of construction of the proposed facility, and (ii) taking into consideration the site criteria contained in 10 CFR Part 100, the proposed facility can be constructed and operated at the proposed location without undue risk to the health and safety of the public.

With respect to the last of these findings, the staff notes that the requirements of 10 CFR Part 100 are specific to nuclear power reactors, and therefore not applicable to the SHINE facility. However, the staff evaluated SHINE's site specific conditions using site criteria similar to 10 CFR Part 100, by using the guidance in NUREG-1537. The staff's review evaluated the geography and demography of the site; nearby industrial, transportation, and

military facilities; site meteorology; site hydrology; and site geology, seismology, and geotechnical engineering to ensure that issuance of the construction permit will not be inimical to public health and safety.

The staff's evaluation of the preliminary design of SHINE's I&C systems does not constitute approval of the safety of any design feature or specification. Such approval will be made following the evaluation of the final design of SHINE's I&C systems, as described in the FSAR as part of SHINE's operating license application.

7a.3.1 Applicable Regulatory Requirements

The applicable regulatory requirements for the evaluation of SHINE's IF I&C systems are as follows:

> 10 CFR 50.34, "Contents of applications; technical information," paragraph (a), "Preliminary safety analysis report."

As required by 10 CFR 50.34(a)(3)(i), SHINE must describe the principal design criteria for its facility in the PSAR; however, SHINE is not required to follow 10 CFR Part 50, Appendix A, "General Design Criteria [GDCs] for Nuclear Power Plants," as this appendix only applies to nuclear power reactors. Nonetheless, SHINE has applied several of the GDCs to the preliminary design of its I&C systems in the IF. As such, the staff based its review, in part, on SHINE's application of the following GDCs to its I&C systems:

- GDC 2, "Design Bases for Protection Against Natural Phenomena."
- GDC 4, "Environmental and Dynamic Effects Design Bases."
- GDC 5, "Sharing of Structures, Systems, and Components."
- GDC 10, "Reactor Design."
- GDC 12, "Suppression of Reactor Power Oscillations."
- GDC 13, "Instrumentation and Control."
- GDC 15, "Reactor Coolant System Design."
- GDC 16, "Containment Design."
- GDC 17, "Electric Power Systems."
- GDC 19, "Control Room."
- GDC 20, "Protection System Functions."
- GDC 21, "Protection System Reliability and Testability."
- GDC 22, "Protection System Independence."
- GDC 23, "Protection System Failure Modes."
- GDC 24, "Separation of Protection and Control Systems."
- GDC 25, "Protection System Requirements for Reactivity Control Malfunctions."
- GDC 26, "Reactivity Control System Redundancy and Capability."
- GDC 27, "Combined Reactivity Control Systems Capability."
- GDC 28, "Reactivity Limits."
- GDC 29, "Protection Against Anticipated Operational Occurrences."

7a.3.2 Regulatory Guidance and Acceptance Criteria

In applying guidance and acceptance criteria, the staff used its judgment as to which acceptance criteria were relevant to SHINE's proposed facility, as much of this guidance was originally developed for nuclear reactors. Given the similarities in SHINE's proposed facility and

non-power research reactors, the staff used established guidance documents and the Commission's regulations to determine the acceptance criteria for demonstrating compliance with 10 CFR regulatory requirements. For example, the staff used:

- NUREG-1537, Part 1, "Guidelines for Preparing and Reviewing Applications for the Licensing of Non-Power Reactors, Format and Content," issued February 1996 (Reference 4).

- NUREG-1537, Part 2, "Guidelines for Preparing and Reviewing Applications for the Licensing of Non-Power Reactors, Standard Review Plan and Acceptance Criteria," issued February 1996 (Reference 5).

- "Final Interim Staff Guidance [ISG] Augmenting NUREG-1537, Part 1, 'Guidelines for Preparing and Reviewing Applications for the Licensing of Non-Power Reactors: Format and Content,' for Licensing Radioisotope Production Facilities and Aqueous Homogeneous Reactors," dated October 17, 2012 (Reference 6).

- "Final Interim Staff Guidance Augmenting NUREG-1537, Part 2, 'Guidelines for Preparing and Reviewing Applications for the Licensing of Non-Power Reactors: Standard Review Plan and Acceptance Criteria,' for Licensing Radioisotope Production Facilities and Aqueous Homogeneous Reactors," dated October 17, 2012 (Reference 7).

As stated in the ISG Augmenting NUREG-1537, the staff determined that certain guidance originally developed for heterogeneous non-power research and test reactors is applicable to aqueous homogenous facilities and production facilities. SHINE used this guidance to inform the design of its facility and prepare its PSAR. The staff's use of reactor-based guidance in its evaluation of the SHINE PSAR is consistent with the ISG Augmenting NUREG-1537.

As appropriate, additional guidance (e.g., NRC regulatory guides, Institute of Electrical and Electronics Engineers [IEEE] standards, American National Standards Institute/American Nuclear Society [ANSI/ANS] standards) has been used in the staff's review of SHINE's PSAR. The use of additional guidance is based on the technical judgment of the reviewer, as well as references in NUREG-1537, Parts 1 and 2; the ISG Augmenting NUREG-1537, Parts 1 and 2; and the SHINE PSAR. Additional guidance documents used to evaluate SHINE's PSAR are provided as references in Appendix B of this SER.

7a.4 Review Procedures, Technical Evaluation, and Evaluation Findings

The staff performed an evaluation of the technical information presented in SHINE PSAR Section 7a, as supplemented by responses to RAIs, to assess the sufficiency of the preliminary design and performance of SHINE's IF I&C systems for the issuance of a construction permit, in accordance with 10 CFR 50.35(a). The staff determined that the sufficiency of preliminary design and performance of SHINE's IF I&C systems is determined by ensuring the design and performance meet applicable regulatory requirements, guidance, and acceptance criteria. While the technical evaluation of these systems provided in this section is specific to the SHINE IF, the staff's review considers the interface of these systems between the IF and RPF as part of a comprehensive technical evaluation. The results of this technical evaluation are summarized in Section 7a.5, "Summary and Conclusions."

For the purposes of issuing a construction permit, the preliminary design of the SHINE I&C systems may be adequately described at a functional or conceptual level. The staff evaluated the sufficiency of the preliminary design of the SHINE I&C systems based on the applicant's design methodology and ability to provide reasonable assurance that the final design will conform to the design bases with adequate margin for safety. As such, the staff's evaluation of the preliminary design of SHINE's I&C systems does not constitute approval of the safety of any design feature or specification. Such approval will be made following the evaluation of the final design of SHINE's I&C systems, as described in the FSAR, as part of SHINE's operating license application.

7a.4.1 Summary Description

The staff evaluated the sufficiency of SHINE's summary description of its IF I&C systems, as described in SHINE PSAR Section 7a2.1, "Summary Description," using the guidance and acceptance criteria from Section 7.1, "Summary Description," of NUREG-1537, Parts 1 and 2.

As stated in Section 7.1 of NUREG-1537, Part 1, the description of the I&C systems should, in part, summarize the "technical aspects, safety, philosophy, and objectives of the I&C system design," including discussions on types of instruments and classifications of systems.

Section 7a2.1 of the SHINE PSAR provides brief descriptions of the types of equipment, types of parameters monitored, and the types of reactivity control measures for the principal irradiation facility I&C systems, including the TSV reactivity protection systems (TRPS), the TSV reactivity control systems (TRCS), the ESFAS, and control room instruments and displays. The principal IF I&C systems are briefly described in SHINE PSAR Sections 7a2.1.1 through 7a2.1.5, as discussed below. Additionally, a description of the human-machine interface is provided in SHINE PSAR Section 7a2.6, "Control Console and Display Information."

Based on the flexibility in the design details and the ability to review design once it is completed the staff determined that descriptions of actuating logic for the TSVs are not necessary for the issuance of a construction permit. Such logic will be evaluated in the SHINE FSAR.

SHINE PSAR Section 7a2.1.1, "Reactivity Protection Systems," introduces the TRPS, a digital control system covering the TSV and entire primary system boundary. The TRPS is responsible for monitoring various essential inputs and has the ability to mitigate abnormal or accident conditions through automated protective actions. The protective actions include opening the TSV dump valves, de-energizing the neutron driver, closing the TSV fill valves, and closing the TSV dump tank outlet valves. This system is classified as a safety-related system. Additional details of the TRPS design is provided in SHINE PSAR Section 7a2.4, "TSV Reactivity Protection System," and Figures 7a2.1-1, "Safety Approach for TSV Shutdown," and 7a2.2-1, "I&C System Block Diagram for Irradiation Facility."

SHINE PSAR Section 7a2.1.2, "Reactivity Control Systems," introduces the TRCS as the TSV process control system (TPCS) used for control of normal operations, startup, and shutdown of the neutron driver, and the TSV residing in the IU cell. This system is a separate digital control system and is independent from the TRPS. The TPCS is non-safety-related and is further described in SHINE PSAR Section 7a2.3, "TSV Process Control Description."

SHINE PSAR Section 7a2.1.3, "Reactivity Detection Systems," briefly describes the independent neutron flux detection system (NFDS), which is the primary means for monitoring the reactivity and power of the sub-critical assembly system (SCAS). The NFDS measures

neutron flux outside of the TSV and provides input to the TPCS and TRPS. These are redundant and independent signal channels that represent the neutron flux in the SCAS. The NFDS has independent high flux trip settings that are input signals to the TRPS. Should the neutron flux measured at the detectors exceed the allowable operating conditions, the NFDS triggers the TRPS to perform its protective action. There is a separate independent NFDS for each IU cell in the SHINE facility. This system is further described in PSAR Section 7a2.4.3, "NFDS Description."

SHINE PSAR Section 7a2.1.4, "Engineered Safety Features Actuation System," briefly describes the ESFAS as consisting of two independent, safety-related, analog relay trains. Upon sensing essential parameters outside predefined limits, the ESFAS is designed to automatically activate the ESF mitigative actions for the affected IU cell and TSV off gas system (TOGS) shielded cell. During activation, the ESFAS isolates systems that penetrate the IU cell and TOGS shielded cell boundaries, including the bubble-tight dampers in the radiologically controlled area (RCA) ventilation system Zone 1 (RVZ1) cells. In addition, the ESFAS signals the TRPS to actuate its trip mechanisms. The ESFAS can isolate any individual IU cell or all of the IU cells or any combination, depending on the need. This system is further described in PSAR Section 7a2.5, "Engineered Safety Features Actuation System."

SHINE PSAR Section 7a2.1.5, "Control Room and Instrument Displays," briefly describes the IF centralized control room, from which each IU within the IF is monitored and controlled. The SHINE PSAR states that the TRPS and the TPCS each have independent and electrically isolated, dedicated operator workstations, complete with annunciation, alarm, and operator interface displays. The work stations are housed in two consoles, which are redundant in nature and can be operated simultaneously and independently. This system is further described in PSAR Section 7a2.6.

Additionally, the control room houses the annunciation for the radiation monitoring that occurs throughout the IF and the RPF. The IF and RPF utilize a continuous air monitoring system (CAMS) and radiation area monitoring system (RAMS) for continuous radiological monitoring. The RAMS and CAMS are strategically placed throughout the facility to alert personnel of any potential radiation hazards. These systems are further described in PSAR Section 7a2.7, "Radiation Monitoring Systems."

On the basis of its review, the staff has determined that the level of detail provided in the summary description of the SHINE IF I&C systems demonstrates an adequate design basis for a preliminary design and satisfies the applicable acceptance criteria discussed in NUREG-1537, Part 2, Section 7.1.

Therefore, the staff finds that the summary description of the SHINE IF I&C systems, as described in SHINE PSAR Section 7a2.1, is sufficient and meets the applicable regulatory requirements and guidance for the issuance of a construction permit in accordance with 10 CFR 50.35. Further technical or design information required to complete the safety analysis may reasonably be left for later consideration. The staff will confirm that the final design conforms to this design basis during the evaluation of SHINE's FSAR.

7a.4.2 Design of Instrumentation and Control Systems

The staff evaluated the sufficiency of the design of SHINE's IF I&C systems, as described in SHINE PSAR Section 7a2.2, "Design of Instrumentation and Control Systems," and supplemented by responses to RAIs, in part, by reviewing the design criteria, design basis

requirements, system description, and system performance analysis of SHINE's I&C systems, as described below, using the guidance and acceptance criteria from Section 7.2, "Design of Instrumentation and Control Systems," NUREG-1537, Parts 1 and 2.

As stated in Section 7.2.1, "Design Criteria," of NUREG-1537 Part 1, the "applicant should [in part] discuss the criteria for developing the design bases for the I&C systems," including the "basis for evaluating the reliability and performance of the I&C systems[.]"

Section 7a2.2.1, "Design Criteria," of the SHINE PSAR indicates that the IF design criteria were adopted from analogous design criteria in nuclear power plants and adapted for applicability to the unique design of the SHINE facility. The specific design criteria and design bases used by the applicant are summarized in SHINE PSAR Table 7a2.2-1, "Design Criteria for the TSV Instrumentation and Control System."

The staff reviewed SHINE PSAR Section 7a2.2 consistent with NUREG-1537, Part 1, Section 7.2.2, "Design-Basis Requirements," which states, in part, that the "design bases for the I&C system, subsystems, and components should include the following, as applicable:

- The range of values that monitored variables may exhibit for normal operation, shutdown conditions, and for postulated accidents.

- The specification of precision and accuracy requirements for the instruments, control subsystems, or components. . ."

Design basis requirements for the SHINE IF I&C systems are discussed in SHINE PSAR Table 7a2.2-1.

During its review, the staff noted that SHINE PSAR Table 7a2.2-2, "IF Verification Matrix Design Criteria, Bases, Description" (Sheet 9 of 10) states, in part, that "the amount and rate of reactivity increases during the fill and irradiation processes are limited through physical and control system design to ensure that the effects of postulated reactivity accidents can neither: (1) result in damage to the primary system boundary greater than limited local yielding; nor, (2) sufficiently disturb the target solution vessel, its support structures or other target solution vessel internals to impair significantly the capability to drain the target solution vessel." However, the staff determined that additional information was needed for these statements to determine if the design provides reasonable assurance that the design criteria will be met. This information is necessary to satisfy the design bases described in NUREG-1537, Part 1, Section 7.2, "Design-Basis Requirements," and demonstrate the adequacy of the design basis of the SHINE I&C systems.

Therefore, in RAI 7a2.2-1 (Reference 14), the staff requested additional information for the statements in SHINE PSAR Table 7a2.2-2 (Sheet 9 of 10). In particular, the staff requested information for details on the anticipated accuracy for the reactivity control and the criteria for determining that draining of the TSV is not impaired.

In its response to RAI 7a2.2-1 (Reference 21), the applicant stated the following:

> Part 1 of NUREG-1537 . . . states, in part, that the design bases for the instrument and control (I&C) system, subsystems, and components should include the range of values that monitored variables may exhibit for normal operation, shutdown conditions, and for postulated accidents. SHINE will

monitor neutron flux and process variables during the entire fill (Mode 1) and irradiation (Mode 2) process. Neutron flux is plotted to obtain the 1/M versus the fill volume (height) during the fill process and continuously monitored during the irradiation process to ensure that measured parameters do not exceed acceptable limits. Reactivity in the TSV will only be directly controlled during the startup process and when the target solution is drained. The nominal margin to critical (e.g., five percent by volume) will be controlled through the 1/M process. The expected accuracies for the parameters used for reactivity monitoring are provided in Table 7a2.2-1-1. The expected ranges of variables for normal operation and postulated accidents are also provided in the table. The accuracy of the overall margin to critical during startup is described in the SHINE Response to RAI 7a2.3-1.

During the irradiation (Mode 2) process, the control system does not directly control the reactivity. The physical design and characteristics of the subcritical assembly (e.g., natural convection cooling design, nuclear feedback coefficients) determine the reactivity response. The target solution does not require reactivity monitoring after it is transferred into the TSV dump tank during Mode 3, because it is contained in a criticality-safe geometry and is passively cooled by the light water pool.

The draining of the TSV is monitored by valve position indication on the TSV dump valves and TSV level instrumentation. Only one of the two dump valves is required to function to meet the required drain rate for the TSV. Periodic surveillance testing will be performed to verify the draining of the TSV is not impaired by observing the rate of TSV level decrease following opening of the TSV dump valves, which will be compared to the required rate. Discrepancies identified during surveillance testing (e.g., significant decrease in flow rate) will be placed into the Corrective Action Program.

Additionally, in its response to RAI 7a2.2-1 (Reference 21), the applicant provided PSAR Table 7a2.2-1-1, “Reactivity Monitoring Variables, Ranges, and Accuracies (Design Basis for Reactivity Control and Protection Trips-Nominal),” which gives the range and accuracies of the monitored variables. The applicant further stated that the nominal margin to critical volume in the TSV is, for example, 5 percent. The staff finds these figures demonstrate that the anticipated range of values will be monitored by the planned equipment and is acceptable.

Regarding the overall accuracy or uncertainty, the applicant’s response to RAI 7a2.2-1 references the response to RAI 7a2.3-1, which then references the response to RAI 4a2.6-6, (all contained in Reference 21), which cites an example of overall uncertainty of 30 percent. The staff finds that this response provides information on precision and accuracy as discussed in the design-basis criteria discussed in NUREG-1537, Part 1, Section 7.2, and is therefore acceptable. The staff will confirm that the final design conforms to this design basis during the evaluation of SHINE FSAR.

As stated in Section 7.2.3, “System Description,” of NUREG-1537, Part 1, the system description should, in part, “include equipment and major components as well as block, logic, and schematic diagrams.”

SHINE PSAR Section 7a2.2.3, “System Description,” further describes IF I&C systems, equipment, and major components. Block, logic, and schematic diagrams are provided in

PSAR Figure 7a2.2-1, “I&C System Block Diagram for Irradiation Facility.” The applicant also provides hardware and software descriptions, as well as software flow diagrams for digital computer systems.

Descriptions of system operational and support requirements, operator interface requirements, and methodology and acceptance criteria used to establish and calibrate the trip or actuation setpoints or interlock functions are not necessary for the issuance of a construction permit. Evaluation of these requirements will occur during the review of SHINE’s FSAR.

As stated in Section 7.2.4, “System Performance Analysis,” of NUREG-1537, Part 1, the applicant should, in part, “conduct a performance analysis of the proposed I&C system to ensure the design criteria and design bases are met and license requirements for the performance of the system are specified.”

SHINE PSAR Section 7a2.2.4, “System Performance Analysis,” presents an analysis of how the system design meets the design criteria and design bases for the TRPS. The discussion touches on accuracy, reliability, adequacy, and timeliness of I&C system action, trip setpoint drift, redundancy, independence, and how the single-failure criterion is to be met to ensure safe operation and safe shutdown of the affected IU. The PSAR sections listed below provide information on various design aspects:

- 7a2.2.4.1, “IU Trip Design Basis.”
- 7a2.2.4.1.1, “Safety Functions and Corresponding Protective/Mitigative Actions for Design Basis Events.”
- 7a2.2.4.1.2, “Variables Monitored to Control Protective/Mitigative Action.”
- 7a2.2.4.1.3, “Variable Monitored Having Spatial Dependence.”
- 7a2.2.4.1.4, “Range of Transient and Steady-State Conditions During Normal, Abnormal, and Accident Conditions.”
- 7a2.2.4.1.5, “Functional Degradation of Safety System Performance.”
- 7a2.2.4.2, “Analysis.”
- 7a2.2.4.2.1, “TSV Trip Function Conformance to Applicable Criteria.”
- 7a2.2.4.2.1.1, “General Functional Requirement Conformance.”
- 7a2.2.4.2.1.2, “Single Failure Criterion Conformance.”
- 7a2.2.4.2.1.3, “Independence for Control and IU Trip Conformance.”
- 7a2.2.4.2.1.4, “Derivation of System Inputs Conformance.”
- 7a2.2.4.2.1.5, “Requirements on Bypassing Trip Functions Conformance.”
- 7a2.2.4.2.1.6, “Requirements on Setpoint Determination and Multiple Setpoint Conformance.”

- 7a2.2.4.2.1.7, “Requirements for Completion of Trip Conformance.”
- 7a2.2.4.2.1.8, “Requirements for Manual Control of Trip Conformance.”

The staff finds that the level of detail provided on systems performance analysis satisfies the criteria of NUREG-1537, Part 2, Section 7.2, and demonstrates an adequate design basis for a preliminary design. A more detailed evaluation of information (e.g., ranges of transient and steady-state conditions and requirements for multiple setpoints and trip criteria) will occur during the review of SHINE’s FSAR, at which time the staff will confirm that the final design conforms to this design basis.

On the basis of its review, the staff has determined that the level of detail provided in the design of the SHINE IF I&C systems demonstrates an adequate design basis for a preliminary design and satisfies the applicable acceptance criteria of NUREG-1537, Part 2, Section 7.2.

Therefore, the staff finds that the design of the SHINE IF I&C systems, as described in SHINE PSAR Section 7a2.2, is sufficient and meets the applicable regulatory requirements and guidance for the issuance of a construction permit in accordance with 10 CFR 50.35. Further technical or design information required to complete the safety analysis (e.g., information related to the design of instrument and control systems designed to prevent an inadvertent criticality event) may reasonably be left for later consideration. The staff will confirm that the final design conforms to the design basis during the evaluation of SHINE’s FSAR.

7a.4.3 Target Solution Vessel Process Control Description

The staff evaluated the sufficiency of the preliminary design of SHINE’s TPCS, as described in SHINE PSAR Section 7a2.3, “TSV Process Control Description,” and supplemented by the applicant’s responses to RAIs, in part, by reviewing the description, process control systems, and sequence and interlock summary of SHINE’s TPCS using the guidance and acceptance criteria from Section 7.3, “Reactor Control System,” of NUREG-1537, Parts 1 and 2.

Consistent with the review procedures in NUREG-1537, Part 2, Section 7.3, the staff confirmed that TPCS information for all normal functions and systems described in other chapters of the PSAR are addressed in this section and verified that all design bases are justified, as presented in SHINE PSAR Section 7a2.3 and other relevant chapters of the PSAR.

NUREG-1537, Part 2, Section 7.3 states, in part, that the “RCS [Reactor Control System] [should be] designed to provide for the reliable control of the reactor power level, rate of change of power levels . . . during reactor startup, the full range of normal operation, and shutdown.”

Section 7a2.3 of the SHINE PSAR describes the preliminary design of the TPCS, including descriptions of the four operational modes.

In its review, the staff noted that PSAR Section 7a2.3.2.1, “Mode 1 - Startup Mode,” states that the startup process calculates the subcritical multiplication factor M from the neutron flux level and plots 1/M versus the fill volume (height). This is then compared to a graph of predicted acceptance values for the same parameter. However, it was not clear how bias and uncertainties associated with the benchmarking of criticality calculations, together with the expected variability in process parameters and instrumentation readings were being considered.

Therefore, in RAI 7a2.3-1 (Reference 14), the staff requested additional information regarding the uncertainties in the computations described in SHINE PSAR Section 7a2.3.2.1, including a quantitative estimate of the expected overall uncertainty in their subcritical reactivity values during startup. This information is necessary to demonstrate the adequacy of the design basis of the SHINE TPCS and satisfy the acceptance criteria of NUREG-1537, Part 2, Section 7.3, which states, in part, that the "RCS should give continuous indication of the neutron flux from subcritical source multiplication level through the licensed maximum power range."

In its response to RAI 7a2.3-1 (Reference 21), the applicant stated:

> The SHINE Response to RAI 4a2.6-6 discusses the uncertainties in k_{eff} and subcritical reactivity during startup. As discussed in that response, SHINE plans to use a volume margin to critical approach, which will determine the target solution volume below critical during startup and calculate the subcritical reactivity by multiplying this volume margin to critical by the reactivity worth per volume. By using this approach, the bias of criticality calculations is eliminated from the calculation process.

Regarding the overall accuracy or uncertainty, the applicant's response to RAI 7a2.2-1 cites an example of overall uncertainty of 30 percent. The staff finds this value to be acceptable, considering the values in PSAR Table 7a2.2-1-1, and satisfies the acceptance criteria of NUREG-1537, Part 2, Section 7.3, by demonstrating an adequate design basis in support for a preliminary design, which is commensurate with the precision and accuracy of the variable being measured. The staff will confirm that the final design conforms to this design basis during the evaluation of SHINE's FSAR.

On the basis of its review, the staff has determined that the level of detail provided on the TPCS demonstrates an adequate design basis for a preliminary design and satisfies the applicable acceptance criteria of NUREG-1537, Part 2, Section 7.3, allowing the staff to make the relevant finding that the applicant has described the normal operating modes of the facility.

Therefore, the staff finds that the preliminary design of the SHINE TPCS, as described in SHINE PSAR Section 7a2.3 and supplemented by the applicant's response to an RAI, is sufficient and meets the applicable regulatory requirements and guidance for the issuance of a construction permit in accordance with 10 CFR 50.35. Further technical or design information required to complete the safety analysis may reasonably be left for later consideration. The staff will confirm that the final design conforms to this design basis during the evaluation of SHINE's FSAR.

7a.4.4 Target Solution Vessel Reactivity Protection System

The staff evaluated the sufficiency of the preliminary design of SHINE's TRPS, as described in SHINE PSAR Section 7a2.4 and supplemented by the applicant's responses to RAIs, in part, by reviewing the description and performance analysis of SHINE's TRPS using the guidance and acceptance criteria from Section 7.4, "Reactor Protection System," of NUREG-1537, Parts 1 and 2.

Consistent with the review procedures in NUREG-1537, Part 2, Section 7.4, the staff compared the design bases for the TRPS with the PSAR description of possible hazards to the facility or personnel that could be prevented or mitigated by timely protective action, as presented in SHINE PSAR Section 7a2.3 and other relevant chapters of the PSAR.

During its review, the staff noted that SHINE PSAR Section 7a2.4.1, “TRPS Description,” states that the only nuclear trips are on high neutron flux, source range, and high range. However, there are no apparent anticipatory trip(s) provided for high startup rates or short periods, which are usually needed to adequately limit the fission reaction during high-reactivity transients.

Therefore, in RAI 7a2.4-1 (Reference 14), the staff requested analyses supporting the adequacy of the trips described in SHINE PSAR, Section 7a2.4.1, to avoid a possibly unacceptable high reactivity transient, considering uncertainties and possible reactivity insertion events. Additionally, the applicant was requested to explain why a period trip in the source range would not be necessary, noting that the source range period is already provided. This information is necessary to demonstrate the adequacy of the design basis of the SHINE TRPS and satisfy the acceptance criteria of NUREG-1537, Part 2, Section 7.4, which states, in part, that “the reactor [SHINE facility] should have operable protection capability in all operating modes and conditions, as analyzed in the SAR.”

In response to RAI 7a2.4-1 (Reference 20), the applicant stated, in part, that “[t]ransient behavior will be analyzed using a transient system model currently being completed. Transient systems modeling will be used for the adequacy of the current nuclear trips to prevent unacceptably high reactivity transients as well as to verify protection capability in all operating modes, including determining if there is a need for a period trip during filling operations.” The results of this analysis will be used as part of the detailed design and provided in the FSAR.

The staff finds that this response satisfies the acceptance criteria of NUREG-1537, Part 2, Section 7.4, and demonstrates an adequate design basis for a preliminary design. The staff will confirm that the final design conforms to this design basis during the evaluation of SHINE’s FSAR.

On the basis of its review, the staff has determined that the level of detail the applicant provided on the TRPS demonstrates an adequate design basis for a preliminary design and satisfies the applicable acceptance criteria of NUREG-1537, Part 2, Section 7.4, allowing the staff to make the following relevant findings: (1) the preliminary design reasonably ensures that the design bases can be achieved, (2) the TRPS is designed to maintain function or to achieve safe shutdown, and (3) the TRPS is designed to prevent or mitigate hazards to the facility or escape of radiation.

Therefore, the staff finds that the preliminary design of the SHINE TRPS, as described in SHINE PSAR Section 7a2.4 and supplemented by the applicant’s response to an RAI, is sufficient and meets the applicable regulatory requirements and guidance for the issuance of a construction permit in accordance with 10 CFR 50.35. Further technical or design information required to complete the safety analysis may reasonably be left for later consideration. The staff will confirm that the final design conforms to this design basis during the evaluation of SHINE’s FSAR.

7a.4.5 Engineered Safety Features Actuation System

The staff evaluated the sufficiency of the preliminary design of SHINE’s IF ESFAS, as described in SHINE PSAR Section 7a2.5, in part, by reviewing the description and performance analysis of SHINE’s ESFAS using the guidance and acceptance criteria from Section 7.5, “Engineered Safety Features Actuation Systems,” of NUREG-1537, Parts 1 and 2.

Consistent with the review procedures in NUREG-1537, Part 2, Section 7.5, the staff compared the design criteria and bases of the ESFAS with the ESFs and accident scenarios, as well as comparing the design and functional descriptions of the ESFAS with the applicable criteria and functions in NUREG-1537, Part 2, Chapters 6, "Engineered Safety Features," and 13, "Accident Analysis."

On the basis of its review, the staff has determined that the level of detail provided on the ESFAS demonstrates an adequate design basis for a preliminary design and satisfies the applicable acceptance criteria of NUREG-1537, Part 2, Section 7.5, allowing the staff to make the following relevant findings: (1) the applicant has analyzed postulated accident scenarios at the facility, including accidents for which consequence mitigation by the ESFAS is required or planned, (2) the applicant has considered the environments in which the ESFs are expected to operate, and (3) the design considerations of the ESFAS give reasonable assurance that the final design of the system will detect changes in measured parameters as designed and will initiate timely actuation of the applicable ESF.

Therefore, the staff finds that the preliminary design of the SHINE ESFAS, as described in SHINE PSAR Section 7a2.5, is sufficient and meets the applicable regulatory requirements and guidance for the issuance of a construction permit in accordance with 10 CFR 50.35. Further technical or design information required to complete the safety analysis may reasonably be left for later consideration. The staff will confirm that the final design conforms to this design basis during the evaluation of SHINE's FSAR.

7a.4.6 Control Console and Display Information

The staff evaluated the sufficiency of the preliminary design of SHINE's control console and display information, as described in SHINE PSAR Section 7a2.6, in part, by reviewing the operator interface description; control room and display access; operator interface data entry; display interface hardware and software; human factors engineering; static annunciator and fixed status display; alarm and event display; human machine interface; and display independence using the guidance and acceptance criteria from Section 7.6, "Control Console and Display Instruments," of NUREG-1537, Parts 1 and 2.

Consistent with the review procedures of NUREG-1537, Part 2, Section 7.6, the staff compared the design bases and functional requirements of the control console and display information with other facility systems. These systems are designed to display the critical measurement values, provide annunciator functions, and provide a dynamic interface.

On the basis of its review, the staff has determined that the level of detail provided on the control console and display information demonstrates an adequate design basis for a preliminary design and satisfies the applicable acceptance criteria of NUREG-1537, Part 2, Section 7.6, allowing the staff to make the following finding: the applicant has indicated that systems important to the safe and effective operation of the facility (i.e., TRPS and TPCS) will be displayed at the control console.

Therefore, the staff finds that the preliminary design of the SHINE control console and display information, as described in SHINE PSAR Section 7a2.6, is sufficient and meets the applicable regulatory requirements and guidance for the issuance of a construction permit in accordance with 10 CFR 50.35. Further technical or design information required to complete the safety analysis may reasonably be left for later consideration. The staff will confirm that the final design conforms to this design basis during the evaluation of SHINE's FSAR.

7a.4.7 Radiation Monitoring Systems

The staff evaluated the sufficiency of the preliminary design of SHINE's radiation monitoring systems, as described in SHINE PSAR Section 7a2.7, in part, by reviewing the descriptions and locations of SHINE's radiation monitoring equipment using the guidance and acceptance criteria from Section 7.7, "Radiation Monitoring Systems," of NUREG-1537, Parts 1 and 2.

Consistent with the review procedures of NUREG-1537, Part 2, Section 7.7, the staff confirmed that the design bases for the radiation monitoring systems and equipment I&Cs are consistent with giving reliable indication of the presence of radiation or release of radioactive material in the various areas monitored and in the monitored effluent streams from the facility.

On the basis of its review, the staff has determined that the level of detail provided on the radiation monitoring systems demonstrates an adequate design basis for a preliminary design and satisfies the applicable acceptance criteria of NUREG-1537, Part 2, Section 7.7, allowing the staff to make the following relevant findings: (1) the preliminary design of the radiation monitoring system has been described and is applicable to the anticipated sources of radiation, (2) the PSAR discusses all likely radiation and radioactive sources anticipated at the SHINE facility and describes equipment, systems, and devices that will give reasonable assurance that all such sources will be identified and accurately evaluated, and (3) the radiation monitoring systems described in the PSAR give reasonable assurance that dose rates and effluents at the facility will be acceptably detected, and that the health and safety of the facility staff, environment, and public will be acceptably protected.

Therefore, the staff finds that the preliminary design of the SHINE radiation monitoring systems, as described in SHINE PSAR Section 7a2.7 is sufficient and meets the applicable regulatory requirements and guidance for the issuance of a construction permit in accordance with 10 CFR 50.35. Further technical or design information required to complete the safety analysis may reasonably be left for later consideration. The staff will confirm that the final design conforms to this design basis during the evaluation of SHINE's FSAR.

7a.4.8 Probable Subjects of Technical Specifications

In accordance with 10 CFR 50.34(a)(5), the staff evaluated the sufficiency of the applicant's identification and justification for the selection of those variables, conditions, or other items which are determined to be probable subjects of technical specifications for the SHINE facility I&C systems, with special attention given to those items which may significantly influence the final design.

Section 7a2.2.4, "System Performance Analysis," of the SHINE PSAR states that "potential variables, conditions, or other items that will be probable subjects of technical specifications associated with the IF instrumentation and control systems are provided in Chapter 14." Similarly, PSAR Sections 7a2.6.9, "TRPS/TPCS and Display Independence," and 7a2.7.4.3, "Audible and Visual Alarm Devices," indicate that probable subjects of technical specifications associated with the TRPS, TPCS, and display instrumentation and radiation monitoring instrumentation are provided in PSAR Chapter 14, "Technical Specifications." SHINE PSAR Section 14a2.6, "Administrative Controls," lists hot cell audible and visual warnings as part of the facility's as low as is reasonably achievable (ALARA) program, which will be covered by administrative controls in the technical specifications.

Based on the information provided in Sections 7a2.2.4, 7a2.6.9, 7a2.7.3, "Radiation Monitor Locations," and 14a2.6 of the SHINE PSAR, the staff finds that the identification and justification of hot cell audible and visual warnings as part of the SHINE facility's ALARA program as a probable subject of technical specifications for the SHINE IF I&C systems is sufficient and meets the applicable regulatory requirements for the issuance of a construction permit in accordance with 10 CFR 50.35. A detailed evaluation of technical specifications, including limiting conditions for operation (LCOs) and surveillance requirements, will be performed during the review of SHINE's operating license application.

7a.5 Summary and Conclusions

The staff evaluated descriptions and discussions of SHINE's IF I&C systems, including probable subjects of technical specifications, as described in Section 7a2 of the SHINE PSAR and supplemented by the applicant's responses to RAIs, and finds that the preliminary design of SHINE's IF I&C systems, including the principal design criteria, design bases, and information relative to materials of construction, general arrangement, and approximate dimensions: (1) provides reasonable assurance that the final design will conform to the design basis, and (2) meets all applicable regulatory requirements and acceptance criteria in NUREG-1537. The staff further notes that any modifications to the preliminary design of the SHINE I&C systems and operating procedures can be readily implemented in the final design and after facility construction activities have been completed.

On the basis of these findings, the staff has made the following conclusions for the issuance of a construction permit in accordance with 10 CFR 50.35:

(1) SHINE has described the proposed design of IF I&C systems, including, but not limited to, the principal architectural and engineering criteria for the design, and has identified the major features or components incorporated therein for the protection of the health and safety of the public.

(2) Further technical or design information required to complete the safety analysis of the IF I&C systems may reasonably be left for later consideration in the FSAR.

(3) There is reasonable assurance that, taking into consideration the site criteria contained in 10 CFR Part 100, the proposed facility can be constructed and operated at the proposed location without undue risk to the health and safety of the public.

7b Radioisotope Production Facility Instrument and Control Systems

Section 7b, "Radioisotope Production Facility Instrumentation and Control Systems," provides an evaluation of the preliminary design of SHINE's RPF I&C systems as presented in SHINE PSAR Section 7b, "Radioisotope Production Facility Instrument and Control Systems," within which, SHINE describes the design of instrumentation and control systems, production facility process control systems, ESFs and alarming, control console and display instrumentation, and radiation monitoring systems.

7b.1 Areas of Review

The staff reviewed Section 7b, "Radioisotope Production Facility Instrument and Control System," of the SHINE PSAR against applicable regulatory requirements using appropriate regulatory guidance and standards to assess the sufficiency of the preliminary design and performance of SHINE's RPF I&C systems. As part of this review, the staff evaluated descriptions and discussions of SHINE's RPF I&C systems, with special attention to design and operating characteristics, unusual or novel design features, and principal safety considerations. The preliminary design of SHINE's RPF I&C systems was evaluated to ensure the sufficiency of principal design criteria, design bases, and information relative to materials of construction, general arrangement, and approximate dimensions, sufficient to provide reasonable assurance that the final design will conform to the design basis. In addition, the staff reviewed SHINE's identification and justification for the selection of those variables, conditions, or other items which are determined to be probable subjects of technical specifications for the facility, with special attention given to those items which may significantly influence the final design.

Areas of review for this section included RPF I&C process control descriptions, ESFs and alarming, control console and display information, and radiation monitoring systems. Within these review areas, the staff assessed the preliminary analysis of I&C systems needed to monitor key parameters and variables, maintain parameters and variables within prescribed operating ranges, alert operators when operating ranges are exceeded, assure safety limits are not exceeded, and initiate mitigating systems and components important to safety.

7b.2 Summary of Application

The SHINE RCA integrated control system (RICS) monitors and controls both safety-related and non-safety-related components within the RPF.

Section 7b of the SHINE PSAR provides the preliminary design of the RPF I&C systems, including the RPF process control systems, ESFs and alarming, control console and display information, and radiation monitoring systems.

7b.3 Regulatory Basis and Acceptance Criteria

The staff reviewed SHINE PSAR Section 7b against applicable regulatory requirements, using appropriate regulatory guidance and standards, to assess the sufficiency of the preliminary design and performance of SHINE's I&C systems for the issuance of a construction permit. In accordance with paragraph (a) of 10 CFR 50.35, a construction permit authorizing SHINE to proceed with construction may be issued once the following findings have been made:

(1) SHINE has described the proposed design of the facility, including, but not limited to, the principal architectural and engineering criteria for the design, and has identified the major features or components incorporated therein for the protection of the health and safety of the public.

(2) Such further technical or design information as may be required to complete the safety analysis, and which can reasonably be left for later consideration, will be supplied in the FSAR.

(3) Safety features or components, if any, which require research and development have been described by SHINE and a research and development program will be conducted

that is reasonably designed to resolve any safety questions associated with such features or components.

(4) On the basis of the foregoing, there is reasonable assurance that: (i) such safety questions will be satisfactorily resolved at or before the latest date stated in the application for completion of construction of the proposed facility, and (ii) taking into consideration the site criteria contained 10 CFR Part 100, the proposed facility can be constructed at the proposed location without undue risk to the health and safety of the public.

With respect to the last of these findings, the staff notes that the requirements of 10 CFR Part 100 are specific to nuclear power reactors, and therefore not applicable to the SHINE facility. However, the staff evaluated SHINE's site specific conditions using site criteria similar to 10 CFR Part 100, by using the guidance in NUREG-1537. The staff's review evaluated the geography and demography of the site; nearby industrial, transportation, and military facilities; site meteorology; site hydrology; and site geology, seismology, and geotechnical engineering to ensure that issuance of the construction permit will not be inimical to public health and safety.

The staff's evaluation of the preliminary design of SHINE's I&C systems does not constitute approval of the safety of any design feature or specification. Such approval will be made following the evaluation of the final design of SHINE's I&C systems as described in the FSAR as part of SHINE's operating license application.

7b.3.1 Applicable Regulatory Requirements

The applicable regulatory requirements for the evaluation of SHINE's RPF I&C systems are as follows:

> 10 CFR 50.34, "Contents of applications; technical information," paragraph (a), "Preliminary safety analysis report."

As required by 10 CFR 50.34(a)(3)(i), SHINE must describe the principal design criteria for its facility in the PSAR; however, SHINE is not required to follow 10 CFR Part 50, Appendix A, "General Design Criteria for Nuclear Power Plants," as this appendix only applies to nuclear power reactors. Nonetheless, SHINE has applied several of the GDCs to the preliminary design of its I&C systems in the RPF. As such, the staff based its review, in part, on SHINE's application of the following GDCs to its I&C systems:

- GDC 2, "Design Bases for Protection Against Natural Phenomena."
- GDC 4, "Environmental and Dynamic Effects Design Bases."
- GDC 5, "Sharing of Structures, Systems, and Components."
- GDC 10, "Reactor Design."
- GDC 12, "Suppression of Reactor Power Oscillations."
- GDC 13, "Instrumentation and Control."
- GDC 15, "Reactor Coolant System Design."
- GDC 16, "Containment Design."
- GDC 17, "Electric Power Systems."
- GDC 19, "Control Room."
- GDC 20, "Protection System Functions."

- GDC 21, “Protection System Reliability and Testability.”
- GDC 22, “Protection System Independence.”
- GDC 23, “Protection System Failure Modes.”
- GDC 24, “Separation of Protection and Control Systems.”
- GDC 25, “Protection System Requirements for Reactivity Control Malfunctions.”
- GDC 26, “Reactivity Control System Redundancy and Capability.”
- GDC 27, “Combined Reactivity Control Systems Capability.”
- GDC 28, “Reactivity Limits.”
- GDC 29, “Protection Against Anticipated Operational Occurrences.”

7b.3.2 Regulatory Guidance and Acceptance Criteria

In applying guidance and acceptance criteria, the staff used its judgment as to which acceptance criteria were relevant to SHINE’s proposed facility, as much of this guidance was originally developed for nuclear reactors. Given the similarities in SHINE’s proposed facility and non-power research reactors, the staff used established guidance documents and the Commission’s regulations to determine the acceptance criteria for demonstrating compliance with 10 CFR regulatory requirements. For example, the staff used:

- NUREG-1537, Part 1.
- NUREG-1537, Part 2.
- Final ISG Augmenting NUREG-1537, Part 1.
- Final ISG Augmenting NUREG-1537, Part 2.

As stated in the ISG Augmenting NUREG-1537, the staff determined that certain guidance originally developed for heterogeneous non-power research and test reactors is applicable to aqueous homogenous facilities and production facilities. SHINE used this guidance to inform the design of its facility and prepare its PSAR. The staff’s use of reactor-based guidance in its evaluation of the SHINE PSAR is consistent with the ISG Augmenting NUREG-1537.

As appropriate, additional guidance (e.g., NRC regulatory guides, IEEE standards, ANSI/ANS standards) has been used in the staff’s review of SHINE’s PSAR. The use of additional guidance is based on the technical judgment of the reviewer, as well as references in NUREG-1537, Parts 1 and 2; the ISG Augmenting NUREG-1537, Parts 1 and 2; and the SHINE PSAR. Additional guidance documents used to evaluate SHINE’s PSAR are provided as references in Appendix B of this SER.

7b.4 Review Procedures, Technical Evaluation, and Evaluation Findings

The staff performed an evaluation of the technical information presented in Section 7b of SHINE's PSAR, as supplemented by the applicant's responses to RAIs, to assess the sufficiency of the preliminary design and performance of SHINE's RPF I&C systems for the issuance of a construction permit, in accordance with 10 CFR 50.35(a). As discussed in Section 7b.3, "Regulatory Basis and Acceptance Criteria," of this SER, the staff has determined that the sufficiency of preliminary design and performance of SHINE's RPF I&C systems is determined by ensuring the design and performance meet applicable regulatory requirements, guidance, and acceptance criteria. While the technical evaluation of these systems provided in this section is specific to the SHINE RPF, the staff's review considers the interface of these systems between the IF and RPF as part of a comprehensive technical evaluation. The results of this technical evaluation are summarized in Section 7b.5, "Summary and Conclusions."

For the purposes of issuing a construction permit, the preliminary design of the SHINE I&C systems may be adequately described at a functional or conceptual level. The staff evaluated the sufficiency of the preliminary design of the SHINE I&C systems based on the applicant's design methodology and ability to provide reasonable assurance that the final design will conform to the design bases with adequate margin for safety. As such, the staff's evaluation of the preliminary design of SHINE's I&C systems does not constitute approval of the safety of any design feature or specification. Such approval will be made following the evaluation of the final design of SHINE's I&C systems, as described in the FSAR, as part of SHINE's operating license application.

7b.4.1 Summary Description

The staff evaluated the sufficiency of SHINE's summary description of its RPF I&C systems, as described in SHINE PSAR Section 7b.1, "Summary Description," using the guidance and acceptance criteria from Section 7b.1, "Summary Description," of the ISG Augmenting NUREG-1537, Parts 1 and 2.

As stated in Section 7b.1 of the ISG Augmenting NUREG-1537, Part 1, the description of the I&C systems should, in part, summarize the "description of the I&C systems, including the design bases; the safety, considerations, and objectives; the operational characteristics of the production facility that determine or limit the I&C design; and the ways in which the various subsystems constitute the whole and interact to contribute to its essential functions. This summary should also include schematic, logic, and flow diagrams illustrating the various subsystems."

Section 7b.1 of the SHINE PSAR provides a summary description of the RPF I&C systems that includes the design bases; the safety, considerations, and objectives; the operational characteristics of the RPF that determine or limit the I&C design; and the ways in which the various subsystems constitute the whole and interact to contribute to its essential functions.

The summary description references schematic, logic, and flow diagrams illustrating the various subsystems. The staff finds that each RPF I&C system was designed to perform functions commensurate with the complexity of the processes therein. The principal RPF I&C systems are briefly described in SHINE PSAR Sections 7b.1.1 through 7b.1.4, and include the RICS (Safety-Related/ESF), RICS Description (Process Control), Radiation Monitoring, and Control Room and Instrument Displays.

On the basis of its review, the staff has determined that the level of detail provided in the summary description of the SHINE RPF I&C systems demonstrates an adequate design basis for a preliminary design and satisfies the applicable acceptance criteria of the ISG Augmenting NUREG-1537, Part 2, Section 7b.1.

Therefore, the staff finds that the summary description of the SHINE RPF I&C systems, as described in SHINE PSAR Section 7b.1, is sufficient and meets the applicable regulatory requirements and guidance for the issuance of a construction permit in accordance with 10 CFR 50.35. Further technical or design information required to complete the safety analysis may reasonably be left for later consideration. The staff will confirm that the final design conforms to this design basis during the evaluation of SHINE's FSAR.

7b.4.2 Design of Instrumentation and Control Systems

The staff evaluated the sufficiency of the design of SHINE's RPF I&C systems, as described in SHINE PSAR Section 7b.2, "Design of Instrumentation and Control Systems," in part, by evaluating the design criteria, design basis requirements, system description, and system performance analysis of SHINE's RPF I&C systems using the guidance and acceptance criteria from Section 7b.2, "Design of Instrumentation and Control Systems," of the ISG Augmenting NUREG-1537, Parts 1 and 2.

On the basis of its review, the staff has determined that the level of detail provided in design of the SHINE RPF I&C systems demonstrates an adequate design basis for a preliminary design and satisfies the applicable acceptance criteria of the ISG Augmenting NUREG-1537, Part 2, Section 7b.2.

Therefore, the staff finds that the design of the SHINE RPF I&C systems, as described in SHINE PSAR Section 7b.2, is sufficient and meets the applicable regulatory requirements and guidance for the issuance of a construction permit in accordance with 10 CFR 50.35. Further technical or design information required to complete the safety analysis may reasonably be left for later consideration. The staff will confirm that the final design conforms to this design basis during the evaluation of SHINE's FSAR.

7b.4.3 Production Facility Process Control Systems

The staff evaluated the sufficiency of the preliminary design of SHINE's RPF process control system, as described in SHINE PSAR Section 7b.3, "Production Facility Process Control Systems," and supplemented by the applicant's responses to RAIs, in part, by reviewing the valve position mimic tables, pump controls, IU cell transfers, fresh target solution loading, and recycled target solution loading of SHINE's RPF process control system using the guidance and acceptance criteria from Section 7b.3, "Process Control Systems," of the ISG Augmenting NUREG-1537, Parts 1 and 2.

Consistent with the review procedures in the ISG Augmenting NUREG-1537, Part 2, Section 7b.3, the staff confirmed that RPF process control system information for all normal functions and systems described in other chapters of the PSAR is addressed in this section and verified that all design bases are justified, as presented in SHINE PSAR Section 7b.3 and other relevant chapters of the PSAR.

During its review, the staff noted that SHINE PSAR, Section 7b.3 states, in part, that the RICS "[m]onitors and controls inter-equipment process fluid transfers in the RPF. For transport requiring a pump, the RICS controls the ability of the pump to be energized, and for specific transfers, provides controlled fluid flow transfers...."

The staff determined that the application provided insufficient information for the staff to conclude that the RPF instrumentation would be adequate to detect excessive deviations from critical process variables. Therefore, the staff issued RAI 7b.3-1 (Reference 14), in which the staff requested that the applicant provide additional information regarding the adequacy of the facility's instrumentation to detect deviations from nominal concentrations and quantities of fissile materials, should they occur. This information is necessary to demonstrate the adequacy of the design basis of the SHINE RPF instrumentation and satisfy the acceptance criteria of the ISG Augmenting NUREG-1537, Part 2, Section 7b.3, which states, in part, that "[t]he system should be designed with sufficient control of reactivity for all required production and SNM fuel reconditioning process operations…."

In its response to RAI 7b.3-1 (Reference 20), the applicant stated the following:

> Except for the liquid waste processing tanks downstream of the raffinate hold tank (1-UNCS-05T), the RPF tanks that contain fissile materials are designed to be criticality-safe for the most reactive uranium concentration, as described in Subsection 6b.3.1 of the PSAR. If these RPF tanks are over-filled, the excess liquid is contained in criticality-safe geometry configurations. Liquid that overfills these tanks is controlled through the use of sumps and drains to the criticality-safe sump catch tank.
>
> Before liquid is transferred downstream of the raffinate hold tank (to the liquid waste storage tank), the absence of appreciable quantities of fissile material is verified, as described in Subsection 9b.7.3.2.2 of the PSAR. This verification will include appropriate interlocks or other means to prevent the transfer until the verification is completed.
>
> Therefore, the RICS does need to control deviations from nominal concentrations and quantities for the purpose of criticality safety. However, the SHINE facility will contain appropriate instrumentation to adequately monitor the transfer of liquids in the IF and RPF, including tank level indication, flow indication, and leak detection, to prevent tank overfills and identify leaks.

The staff finds that this response satisfies the acceptance criteria of the ISG Augmenting NUREG-1537, Part 2, Section 7b.3, and demonstrates an adequate design basis for a preliminary design. The staff will confirm that the final design conforms to this design basis during the evaluation of SHINE's FSAR.

Based on the information provided in Section 7b.3 of the SHINE PSAR, as supplemented by the applicant's responses to RAIs, the staff finds that the preliminary design of the SHINE RPF process controls is sufficient and meets the applicable regulatory requirements and acceptance criteria of NUREG-1537 for the issuance of a construction permit in accordance with 10 CFR 50.35. Further technical or design information required to complete the safety analysis may reasonably be left for later consideration in the FSAR.

7b.4.4 Engineered Safety Feature and Alarming

The staff evaluated the sufficiency of the preliminary design of SHINE's RPF ESF and alarming, as described in SHINE PSAR Section 7b.4, "Engineered Safety Feature and Alarming," as supplemented by the applicant's responses to RAIs, by reviewing the system description, annunciation and display, and system performance and analysis of SHINE's ESF and alarming using the guidance and acceptance criteria from Section 7.5, of NUREG-1537, Parts 1 and 2.

Consistent with the review procedures of NUREG-1537, Part 2, Section 7.5, the staff compared the design criteria and bases of the ESFAS with the ESFs and accident scenarios, as well as compared the design and functional descriptions of the ESFAS with the applicable criteria and functions in Chapters 6, "Engineered Safety Features," and 13, "Accident Analysis."

Section 7.5 of NUREG-1537, Part 2, states, in part, that "[t]he range and sensitivity of ESF actuation system sensors should be sufficient to ensure timely and accurate signals to the actuation devices."

During its review, the staff noted that SHINE PSAR, Section 7b.4.1.2.3, "Uranyl Nitrate Conversion System Over Temperature Alarm," states, in part, that "[t]he RICS monitors the temperature of each UNCS [uranyl nitrate conversion system] in the RPF with independent redundant sensors. These sensors measure the temperature at the outlet of the UNCS." However, the staff noted that there was insufficient information to confirm the applicant's assertion. Therefore, the staff issued RAI 7b.4-1 (Reference 14), in which the staff requested that the applicant provide additional information to justify how the location of temperature sensors at the outlet of the UNCS is representative of the process. This information is necessary to demonstrate the adequacy of the design basis of the SHINE RPF ESF and alarming and satisfy the acceptance criteria of NUREG-1537, Part 2, Section 7.5, which states, in part, that "[t]he range and sensitivity of ESF actuation system sensors should be sufficient to ensure timely and accurate signals to the actuation devices."

In its response to RAI 7b.4-1 (Reference 20), the applicant explained that temperature sensors will be located at appropriate points representative of the UNCS process, sufficient to ensure safe and reliable operation of the system. Specific temperature sensor locations will be determined during the detailed design and will be provided in the FSAR. Examples of temperature sensor locations, which will be verified as appropriate during detailed design, include the following:

(1) Upstream of the uranyl nitrate conversion tank (1-UNCS-01T-A/B) to monitor the feed from the molybdenum extraction and purification system (MEPS).

(2) Downstream of the uranyl nitrate conversion tank (1-UNCS-01T-A/B) to measure average temperature and prevent bulk boiling and extra vapor input to the vent stack.

(3) Downstream of the heat exchanger for the uranyl nitrate conversion tank (1-UNCS-01T-A/B).

(4) Upstream of the extraction contactors (1-UNCS-01Z).

(5) Downstream of the recycle uranyl nitrate hold tank (1-UNCS-06T).

(6) At the uranyl nitrate evaporator vessel (1-UNCS-07T).

(7) At the thermal denitrator (1-UNCS-08T).

The staff finds that this response satisfies the acceptance criteria of NUREG-1537, Part 2, Section 7.5, and demonstrates an adequate design basis for a preliminary design. The staff will confirm that the final design conforms to this design basis during the evaluation of SHINE's FSAR.

On the basis of its review, the staff has determined that the level of detail provided on the RPF ESF and alarming demonstrates an adequate design basis for a preliminary design and satisfies the applicable acceptance criteria of NUREG-1537, Part 2, Section 7.5, allowing the staff to make the following findings: (1) the applicant has analyzed postulated accident scenarios at the facility, including accidents for which consequence mitigation by the RPF ESF and alarming is required or planned, (2) the applicant has considered the environments in which the ESFs are expected to operate, and (3) the design considerations of the RPF ESF and alarming give reasonable assurance that the final design of the system will detect changes in measured parameters as designed and will initiate timely actuation of the applicable ESF.

Therefore, the staff finds that the preliminary design of the SHINE RPF ESF and alarming, as described in SHINE PSAR Section 7b.4 is sufficient and meets the applicable regulatory requirements and guidance for the issuance of a construction permit in accordance with 10 CFR 50.35. Further technical or design information required to complete the safety analysis may reasonably be left for later consideration. The staff will confirm that the final design conforms to this design basis during the evaluation of SHINE's FSAR.

7b.4.5 Control Console and Display Instrumentation

The staff evaluated the sufficiency of the preliminary design of SHINE's RPF control console and display information, as described in SHINE PSAR Section 7b.5, "Control Console and Display Instrumentation," using the guidance and acceptance criteria from Section 7.6, "Control Console and Display Instruments," of NUREG-1537, Parts 1 and 2, and Section 7b.5, "Control Console and Display Instruments," of the ISG Augmenting NUREG-1537.

Consistent with the review procedures of NUREG-1537, Part 2, Section 7.6, the staff compared the design bases and functional requirements of the control console and display information with other facility systems.

SHINE PSAR Section 7b.5 describes the control console or human machine interface (HMI) for the RPF, located in the SHINE Medical Isotope Production Facility (MIPF) control room, as an extension of the RICS, discussed in more detail in SHINE PSAR Sections 7b.2.1, "Design Criteria;" 7b.2.2, "Design Bases;" 7b.2.3, "System Description;" 7b.2.4, "System Performance Analysis;" 7b.2.5, "Conclusion;" 7b.3, "Production Facility Process Control Systems;" and 7b.4, "Engineered Safety Feature and Alarming. The RICS is used for RPF monitoring and process control. In addition, this PSAR section discusses alarms and annunciators for the RPF CAMS, RAMS, and criticality accident alarm system (CAAS), discussed in more detail in SHINE PSAR Section 7b.6, "Radiation Monitoring Systems."

On the basis of its review, the staff has determined that the level of detail provided on the control console and display information demonstrates an adequate design basis for a preliminary design and satisfies the applicable acceptance criteria of NUREG-1537, Part 2,

Section 7.6, allowing the staff to make the following relevant finding: the applicant has indicated that systems important to the safe and effective operation of the facility (i.e., RICS, CAMS, RAMS, and CAAS) will be displayed at the control console.

Therefore, the staff finds that the preliminary design of the SHINE control console and display information, as described in SHINE PSAR Section 7b.5, is sufficient and meets the applicable regulatory requirements and guidance for the issuance of a construction permit in accordance with 10 CFR 50.35. Further technical or design information required to complete the safety analysis may reasonably be left for later consideration. The staff will confirm that the final design conforms to this design basis during the evaluation of SHINE's FSAR.

7b.4.6 Radiation Monitoring Systems

The staff evaluated the sufficiency of the preliminary design of SHINE's radiation monitoring systems, as described in SHINE PSAR Section 7b.6, in part, by reviewing the descriptions and locations of SHINE's radiation monitoring equipment described in SHINE PSAR Section 7a2.7, as well as the description of the CAAS using the guidance and acceptance criteria from Section 7.7, "Radiation Monitoring Systems," of NUREG-1537, Parts 1 and 2.

Consistent with the review procedures of NUREG-1537, Part 2, Section 7.7, the staff confirmed that the design bases for the radiation monitoring systems and equipment I&Cs are consistent with giving reliable indication of the presence of radiation or release of radioactive material in the various areas monitored and in the monitored effluent streams from the facility.

On the basis of its review, the staff has determined that the level of detail provided on the radiation monitoring systems demonstrates an adequate design basis for a preliminary design and satisfies the applicable acceptance criteria of NUREG-1537, Part 2, Section 7.7, allowing the staff to make the following relevant findings: (1) the preliminary design of the radiation monitoring system has been described and is applicable to the anticipated sources of radiation, (2) the PSAR discusses all likely radiation and radioactive sources anticipated at the SHINE facility and describes equipment, systems, and devices that will give reasonable assurance that all such sources will be identified and accurately evaluated, and (3) the radiation monitoring systems described in the PSAR give reasonable assurance that dose rates and effluents the facility will be acceptably detected, and that the health and safety of the facility staff, environment, and public will be acceptable protected.

Therefore, the staff finds that the preliminary design of the SHINE radiation monitoring systems, as described in SHINE PSAR Section 7b.6 is sufficient and meets the applicable regulatory requirements and guidance for the issuance of a construction permit in accordance with 10 CFR 50.35. Further technical or design information required to complete the safety analysis may reasonably be left for later consideration. The staff will confirm that the final design conforms to this design basis during the evaluation of SHINE's FSAR.

7b.4.7 Probable Subjects of Technical Specifications

In accordance with 10 CFR 50.34(a)(5), the staff evaluated the sufficiency of the applicant's identification and justification for the selection of those variables, conditions, or other items which are determined to be probable subjects of technical specifications for the SHINE facility I&C systems, with special attention given to those items which may significantly influence the final design.

SHINE PSAR Section 7b.2.4, “System Performance Analysis,” states, in part, that “potential variables, conditions, or other items that will be probable subjects of technical specifications associated with the RPF instrumentation and control systems are provided in Chapter 14.” Similarly, Sections 7b.3, “Production Facility Process Control Systems,” 7b.4.3, “System Performance Analysis,” and 7b.5.1, “System Description,” indicate that probable subjects of technical specifications associated with the production facility process control systems, RICS, and control console and displays are provided in Chapter 14. Table 14a2-1, “SHINE Facility Proposed Parameters for Technical Specifications,” lists the RICS as an LCO for critical equipment malfunctions as described in Section 13b.2.4, “Critical Equipment Malfunction,” of the PSAR.

Based on the information provided in Sections 7b.2.4, 7b.3, 7b.4.3, 7b.5.1, and Table 14a2-1 of the SHINE PSAR, the staff finds that the identification and justification of the RICS as an LCO for the SHINE RPF is sufficient and meets the applicable regulatory requirements and acceptance criteria of NUREG-1537 for the issuance of a construction permit in accordance with 10 CFR 50.35. A detailed evaluation of technical specifications, including LCOs and surveillance requirements, will be performed during the review of SHINE’s operating license application.

7b.5 Summary and Conclusions

The staff evaluated descriptions and discussions of SHINE’s RPF I&C systems, including probable subjects of technical specifications, as described in Section 7b of the SHINE PSAR and supplemented by the applicant’s responses to RAIs, and finds that preliminary design of SHINE’s RPF I&C systems, including the principal design criteria, design bases, and information relative to materials of construction, general arrangement, and approximate dimensions:
(1) provides reasonable assurance that the final design will conform to the design basis, and
(2) meets all applicable regulatory requirements and acceptance criteria in NUREG-1537.

On the basis of these findings, the staff has made the following conclusions for the issuance of a construction permit in accordance with 10 CFR 50.35:

(1) SHINE has described the proposed design of the SHINE facility I&C systems, including, but not limited to, the principal architectural and engineering criteria for the design, and has identified the major features or components incorporated therein for the protection of the health and safety of the public.

(2) Further technical or design information required to complete the safety analysis of the SHINE facility I&C systems may reasonably be left for later consideration in the FSAR.

(3) There is reasonable assurance that, taking into consideration the site criteria contained in 10 CFR Part 100, the proposed facility can be constructed and operated at the proposed location without undue risk to the health and safety of the public.

8.0 ELECTRICAL POWER SYSTEMS

Electrical power systems are designed for operation of the SHINE Medical Technologies, Inc. (SHINE or the applicant), irradiation facility (IF) and radioisotope production facility (RPF). In addition to normal electrical service, emergency electrical service ensures that, given a loss of normal electric service, sufficient power will be available to mitigate accidents in order to: (1) shut down the facility and maintain it in a safe shutdown condition, and (2) prevent or minimize the offsite release of radioactivity in excess of applicable regulatory requirements and guidance.

This chapter of the SHINE construction permit safety evaluation report (SER) describes the review and evaluation of the U.S. Nuclear Regulatory Commission (NRC) staff (the staff) of the preliminary design of the SHINE IF and RPF electrical power systems, as presented in Chapter 8, "Electrical Power Systems," of the SHINE Preliminary Safety Analysis Report (PSAR), as supplemented by the applicant's response to the staff's request for additional information (RAI).

8a Irradiation Unit Electrical Power Systems

SER Section 8a, "Irradiation Facility Electrical Power Systems," provides an evaluation of the preliminary design of SHINE's IF electrical power systems as presented in SHINE PSAR Section 8a2, "Irradiation Unit Electrical Power Systems," within which SHINE describes the irradiation unit (IU) normal electrical power systems and emergency electrical power systems.

8a.1 Areas of Review

As described in SHINE PSAR Sections 8b.1, "Normal Electrical Power Systems," and 8b.2, "Emergency Electrical Power Systems," respectively, the SHINE facility has one common normal electrical power system and one common emergency electrical power system, which serve both the IF and the RPF. Therefore, the areas of review described below are applicable to both the SHINE IF and RPF.

The staff reviewed PSAR Chapter 8 against applicable regulatory requirements using regulatory guidance and standards to assess the sufficiency of the preliminary design of the SHINE facility electrical power systems. As part of this review, the staff evaluated descriptions and discussions of SHINE's electrical power systems, with special attention to design and operating characteristics, unusual or novel design features, and principal safety considerations. The preliminary design of SHINE's electrical power systems was evaluated to ensure the sufficiency of principal design criteria; design bases; and information relative to materials of construction, general arrangement, and approximate dimensions, sufficient to provide reasonable assurance that the final design will conform to the design bases. In addition, the staff reviewed SHINE's identification and justification for the selection of those variables, conditions, or other items that are determined to be probable subjects of technical specifications for the facility, with special attention given to those items that may significantly influence the final design.

Areas of review for this section included normal and emergency electrical power systems. Within these review areas, the staff assessed the preliminary analysis of the normal electrical power systems to ensure the safe operation and shutdown of the SHINE IUs, including the response of the facility to interruptions of normal electrical service, the ability of the facility to be maintained in a safe condition with and without the availability of normal electrical service, the monitoring and control of routine releases, and the prevention of uncontrolled releases of

radioactive material in the event that normal electrical power service is interrupted. The staff examined the ranges of power required, schematic diagrams, design and performance specifications, deviations from guidance and their justifications, and probable subjects for technical specifications.

The staff also assessed the preliminary design and analysis of the SHINE emergency electrical power systems, including the design and functions of the emergency electrical power systems and their support of related systems required for protecting the health and safety of the public.

8a.2 Summary of Application

As stated above and described in SHINE PSAR Sections 8b.1 and 8b.2, the SHINE facility has one common normal electrical power system and one common emergency electrical power system, which serve both the IF and the RPF. Therefore, the summary provided below applies to both the IF and RPF.

The normal electrical power supply consists of 480-volts alternating current (VAC) offsite power service from the local utility, Alliant Energy, and an onsite commercial standby diesel generator (SDG). The normal power is used for normal operation and normal shutdown of the facility. The parts of the normal electrical power supply are described in detail in SHINE PSAR Sections 8a2.1.1, “SHINE Facility Off-site Power Service,” through 8a2.1.12, “SHINE Facility Irradiation Units.” SHINE PSAR Section 8a2.1.2, “SHINE Facility Power Distribution System,” provides a description of the distribution and outdoor lighting systems. The facility power distribution system voltages are 480Y/277 VAC and 208Y/277 VAC, 3-phase, 60 hertz (Hz). The SDG and the loads supported by the SDG are described in SHINE PSAR Sections 8a2.1.3, “SHINE Facility Standby Diesel Generator,” and 8a2.1.4, “SHINE Facility Loads Supported by SDG.” SHINE PSAR Section 8a2.1.5, “Power Distribution Equipment,” provides a description of the power distribution equipment in the facilities. The remaining subsections of SHINE PSAR Section 8a2.1 also cover distribution systems, motor control centers (MCCs), distribution panels, and other electrical components. The SHINE PSAR also provides a description of the grounding systems, lightning protection system, cathodic protection system, freeze protection, cable and raceway components, and raceway and cable routing.

SHINE PSAR Section 8a2.1 states the design basis of the normal electrical power system is to provide sufficient and reliable power to all systems and components requiring electrical power for normal operations and for safe shutdown of the facility. The normal electrical power system is not safety-related, but it supports safety-related systems during normal operations. During an event of loss of normal power, a safety-related, uninterruptible power supply system (UPSS) will provide power to the safety-related systems and components.

SHINE PSAR Section 8a2.2 states the emergency electrical power is the temporary substitute of normal electric power in the event of a loss-of-offsite power (LOOP). Emergency electrical systems are designed to prevent damage to IUs and releases of radioactive material to the environment. While the IUs are designed for passive shutdown, if normal electrical service is interrupted, certain IU functions require emergency electrical power for maintaining the facility in a safe condition following shutdown. As described in SHINE PSAR Section 8a2.2, the emergency electrical power system consists of the UPSS and is designed to provide reliable power for the safety-related equipment required for facility instrumentation, control, monitoring, and other vital functions needed for shutdown of the SHINE facility. The UPSS contains a 250-volts-direct current (VDC) battery subsystem, battery chargers, inverters, bypass voltage regulating transformers, distribution panels, and other distribution equipment necessary to

maintain power to safety-related AC or DC loads. The UPSS will be expected to provide emergency power to safety-related loads for the duration necessary per the PSAR analysis. PSAR Section 8a2.2.3, "SHINE Facility Systems Served by the Class 1E UPSS," provides the list of the SHINE facility systems served by the Class 1E UPSS. The systems specifically associated with the RPF that are served by the UPSS are the process vessel vent system (PVVS), the continuous air monitoring system (CAMS), and the criticality accident alarm system (CAAS). All other systems associated with the RPF are designed to fail safe in the event of a LOOP.

8a.3 Regulatory Basis and Acceptance Criteria

As previously stated and described in SHINE PSAR Sections 8b.1 and 8b.2, the SHINE facility has one common normal electrical power system and one common emergency electrical power system, respectively. Therefore, the regulatory basis and acceptance criteria provided below apply to both the IF and RPF.

The staff reviewed SHINE PSAR Sections 8a2 and 8b against applicable regulatory requirements, using regulatory guidance and standards, to assess the sufficiency of the preliminary design and performance of SHINE's electrical power systems for the issuance of a construction permit. In accordance with paragraph (a) of Title 10 of the *Code of Federal Regulations* (10 CFR) 50.35, "Issuance of Construction Permits," a construction permit authorizing SHINE to proceed with construction may be issued once the following findings have been made:

(1) SHINE described the proposed design of the facility, including, but not limited to, the principal architectural and engineering criteria for the design, and has identified the major features or components incorporated therein for the protection of the health and safety of the public.

(2) Such further technical or design information as may be required to complete the safety analysis, and which can reasonably be left for later consideration, will be supplied in the final safety analysis report (FSAR).

(3) Safety features or components, if any, which require research and development have been described by SHINE and a research and development program will be conducted that is reasonably designed to resolve any safety questions associated with such features or components.

(4) On the basis of the foregoing, there is reasonable assurance that: (i) such safety questions will be satisfactorily resolved at or before the latest date stated in the application for completion of construction of the proposed facility, and (ii) taking into consideration the site criteria contained in 10 CFR Part 100, the proposed facility can be constructed and operated at the proposed location without undue risk to the health and safety of the public.

With respect to the last of these findings, the staff notes that the requirements of 10 CFR Part 100 are specific to nuclear power reactors, and therefore not applicable to the SHINE facility. However, the staff evaluated SHINE's site specific conditions using site criteria similar to 10 CFR Part 100, by using the guidance in NUREG-1537. The staff's review evaluated the geography and demography of the site; nearby industrial, transportation, and military facilities; site meteorology; site hydrology; and site geology, seismology, and

geotechnical engineering to ensure that issuance of the construction permit will not be inimical to public health and safety.

The staff's evaluation of the preliminary design of SHINE's electrical power systems does not constitute approval of the safety of any design feature or specification. Such approval will be made following the evaluation of the final design of SHINE's electrical power systems, as described in the FSAR as part of SHINE's operating license application.

8a.3.1 Applicable Regulatory Requirements

The applicable regulatory requirements for the evaluation of SHINE's electrical power systems are as follows:

> 10 CFR 50.34, "Contents of applications; technical information," paragraph (a), "Preliminary safety analysis report."

8a.3.2 Regulatory Guidance and Acceptance Criteria

In applying guidance and acceptance criteria, the staff used its judgment as to which acceptance criteria were relevant to SHINE's proposed facility, as much of this guidance was originally developed for nuclear reactors. Given the similarities in SHINE's proposed facility and non-power research reactors, the staff used established guidance documents and the Commission's regulations to determine the acceptance criteria for demonstrating compliance with 10 CFR regulatory requirements. For example, the staff used:

- NUREG-1537, Part 1, "Guidelines for Preparing and Reviewing Applications for the Licensing of Non-Power Reactors, Format and Content," issued February 1996 (Reference 4);

- NUREG-1537, Part 2, "Guidelines for Preparing and Reviewing Applications for the Licensing of Non-Power Reactors, Standard Review Plan and Acceptance Criteria," issued February 1996 (Reference 5);

- "Final Interim Staff Guidance [ISG] Augmenting NUREG-1537, Part 1, 'Guidelines for Preparing and Reviewing Applications for the Licensing of Non-Power Reactors: Format and Content,' for Licensing Radioisotope Production Facilities and Aqueous Homogeneous Reactors," dated October 17, 2012 (Reference 6); and

- "Final Interim Staff Guidance [ISG] Augmenting NUREG-1537, Part 2, 'Guidelines for Preparing and Reviewing Applications for the Licensing of Non-Power Reactors: Standard Review Plan and Acceptance Criteria,' for Licensing Radioisotope Production Facilities and Aqueous Homogeneous Reactors," dated October 17, 2012 (Reference 7).

As stated in the ISG Augmenting NUREG-1537, the staff determined that certain guidance originally developed for heterogeneous non-power research and test reactors is applicable to aqueous homogenous facilities and production facilities. SHINE used this guidance to inform the design of its facility and prepare its PSAR. The staff's use of reactor-based guidance in its evaluation of the SHINE PSAR is consistent with the ISG Augmenting NUREG-1537.

As appropriate, additional guidance (e.g., NRC regulatory guides, Institute of Electrical and Electronics Engineers (IEEE) standards, American National Standards Institute/American Nuclear Society (ANSI/ANS) standards) has been used in the staff's review of SHINE's PSAR. The use of additional guidance is based on the technical judgment of the reviewer, as well as references in NUREG-1537, Parts 1 and 2; the ISG Augmenting NUREG-1537, Parts 1 and 2; and the SHINE PSAR. Additional guidance documents used to evaluate SHINE's PSAR are provided as references in Appendix B of this SER.

8a.4 Review Procedures, Technical Evaluation, and Evaluation Findings

As described in SHINE PSAR Sections 8b.1 and 8b.2, the SHINE facility has one common normal electrical power system and one common emergency electrical power system that serve both the IF and the RPF. While the technical evaluation of these systems provided in this section is specific to the SHINE IF, the staff's review considers the interface of these systems between the IF and RPF as part of a comprehensive technical evaluation.

The staff performed an evaluation of the technical information presented in SHINE PSAR Section 8a2, as supplemented by the applicant's responses to RAIs, to assess the sufficiency of the preliminary design and performance of SHINE's electrical power systems in the IF for the issuance of a construction permit, in accordance with 10 CFR 50.35(a). The sufficiency of the preliminary design and performance of the SHINE IU is determined by ensuring the design and performance meet applicable regulatory requirements, guidance, and acceptance criteria, as discussed in Section 8a.3, "Regulatory Basis and Acceptance Criteria," of this SER. A summary of the technical evaluation is described in SER Section 8a.5, "Summary and Conclusion."

For the purposes of issuing a construction permit, the preliminary design of the SHINE normal and emergency power systems may be adequately described at a functional or conceptual level. The staff evaluated the sufficiency of the preliminary design of the SHINE normal and emergency electrical power systems based on the applicant's design methodology and ability to provide reasonable assurance that the final design will conform to the design bases with adequate margin for safety. As such, the staff's evaluation of the preliminary design of SHINE's electrical power systems does not constitute approval of the safety of any design feature or specification. Such approval will be made following the evaluation of the final design of SHINE's electrical power systems, as described in the FSAR, as part of SHINE's operating license application.

8a.4.1 Normal Electrical Power Systems

The staff evaluated the sufficiency of the preliminary design of SHINE's normal electrical power systems, as described in SHINE PSAR Section 8a2.1, using the guidance and acceptance criteria from Section 8.1, "Normal Electrical Power Systems," of NUREG-1537, Parts 1 and 2. The staff review included the off-site power service, power distribution system, standby diesel generator and supported loads, distribution equipment, facility grounding system, lightning protection system, cathodic protection system, freeze protection, and cable and raceway components and routing.

Consistent with the review procedures in NUREG-1537, Part 2, Section 8.1, "Normal Electrical Power Systems," the staff: (1) compared the design bases of the normal IU electrical systems with the requirements of IU systems and components that rely on electrical power, (2) confirmed that the design characteristics and components of the normal IU electrical system could provide the projected range of services, (3) analyzed possible malfunctions, accidents, and interruptions

of electrical services to determine their effect on safe facility operation, and (4) determined if proposed redundancy of electrical circuits are sufficient to ensure safe IU operation and shutdown and to avoid uncontrolled release of radioactive material.

On the basis of its review, the staff has determined that the level of detail provided on SHINE's normal electrical power systems demonstrates an adequate design basis for a preliminary design and satisfies the applicable acceptance criteria of NUREG-1537, Part 2, Section 8.1, allowing the staff to make the following relevant findings: (1) the design bases and functional characteristics of the normal electrical power systems will support all required loads, and (2) the design of the normal electrical power system provides that, in the event of the loss or interruption of electrical power, the facility can be safely shut down and maintained in a safe shutdown condition.

Therefore, the staff finds that the preliminary design of the SHINE normal electrical power systems in the IF, as described in SHINE PSAR Section 8a2.1, is sufficient and meets the applicable regulatory requirements and guidance for of the issuance of a construction permit in accordance with 10 CFR 50.35. Further technical or design information required to complete the safety analysis (e.g., the design and location of electrical wiring that prevents inadvertent electromagnetic interference between the electrical power service and safety-related instrumentation and control circuits) may reasonably be left for later consideration. The staff will confirm that the final design conforms to this design basis during the evaluation of SHINE's FSAR.

8a.4.2 Emergency Electrical Power Systems

The staff evaluated the sufficiency of the preliminary design of SHINE's emergency electrical power systems in the IF, as described in PSAR Section 8a2.2 and supplemented by a response to a RAI using the guidance and acceptance criteria from Section 8.2, "Emergency Electrical Power Systems," of NUREG-1537, Parts 1 and 2.

Consistent with the review procedures of NUREG-1537, Part 2, Section 8.2, the staff compared the design bases of the emergency electrical power system with the requirements for emergency electrical power for IU systems and components requiring electrical power and compared the design and functional characteristics with the design bases to verify compatibility. The staff review included the Class 1E UPSS; 250-VDC, Class 1E battery subsystem; nonsafety-related loads, maintenance and testing; surveillance methods; seismic qualification; independence; single-failure criterion; safe shutdown of the IU; and monitoring systems on UPSS.

The staff noted that SHINE PSAR, Section 8a2.2.1, "Class 1E UPSS," references SHINE PSAR Figure 8a2.2-1, "One-Line Diagram – Uninterruptible Electrical Power Supply System" (Reference 47), for UPSS components configuration. SHINE PSAR Section 8a2.1.11, "Raceway and Cable Routing," states, in part, "Non-Class 1E circuits are electrically isolated from Class 1E circuits by isolation devices in accordance with IEEE 384 (IEEE, 2008)."

SHINE PSAR, Figure 8a2.2-1 shows the Class 1E/non-Class 1E boundaries for UPSS Divisions A and B as horizontal dashed lines with arrows pointing upward toward what the annotation indicates is the non-Class 1E side. For both divisions, the drawing shows the Class 1E/non-Class 1E boundaries to be situated between the first load circuit breakers from

the respective facility 480-VAC SDG bus supplying each division's Class 1E battery charger and Class 1E 480V-208Y/120V voltage-regulating transformer and the respective input/supply circuit breakers for those battery chargers and voltage-regulating transformers.

Class 1E isolation devices are located and designed to function to isolate non-Class 1E circuits with sustained overloads or faults from otherwise unaffected Class 1E circuits powered from a common source to preserve the continuity of power to the otherwise unaffected Class 1E circuits. Because the SDG buses normally provide power to both Class 1E and non-Class 1E loads, then theoretically, all the non-Class 1E load circuit breakers from the SDG busses, or their respective local supply breakers, could be considered Class 1E isolation devices that must trip open to clear faults or sustained overloads on the non-Class1E loads to preserve continuity of power to the Class 1E loads.

However, based on the information provided in the SHINE PSAR, it was not clear which circuit breakers are considered Class 1E isolation devices. The staff must know which circuit breakers serve as Class 1E isolation devices, because even though they may be enclosed in the switchgear for non-Class 1E busses, and are considered physically part of the non-Class 1E portion of the electrical power distribution system, they must perform a Class 1E function, and therefore, be classified as Class 1E themselves.

Accordingly, in RAI 8a2.2-1 (Reference 14), the staff requested that the applicant provide additional information to further explain the design approach to Class 1E isolation and to designate which circuit breakers in the electrical power distribution systems for the SHINE facility are to serve as Class 1E isolation devices. Additionally, the staff requested that the applicant explain the bases for those designations, how the type of circuit breakers designated as Class 1E isolation devices will be reasonably assured of meeting the specifications for such devices consistent with IEEE Std. 384-2008, "IEEE Standard Criteria for Independence of Class 1E Equipment and Circuits," (IEEE 2008). This information is necessary to demonstrate the adequacy of the design basis of the SHINE emergency electrical power system and satisfy the acceptance criteria of NUREG-1537, Part 2, Section 8.2, which states, in part, that "[a]ny non-safety-related uses of an emergency electrical power system should not interfere with performance of its safety-related functions."

In its response to RAI 8a2.2-1 (Reference 21), the applicant stated the following:

> The 480-VAC SDG buses shown on Figure 8a2.1-1 and Figure 8a2.2-1 of the PSAR are non-Class 1E buses. These buses provide the normal power supply to the Class 1E systems and are not designed to maintain continuity of power to the Class 1E systems upon a loss of off-site power (LOOP) or a fault on the buses. Therefore none of the circuit breakers on these buses are considered Class 1E isolation devices that must trip open to clear faults or sustained overloads on the non-Class 1E loads.
>
> The Class 1E isolation devices are described in PSAR Section 8a2.2.2 and shown in PSAR Figure 8a2.2-1 as "Class 1E Battery Charger A," "Voltage Regulating Xfmr Assembly A Class 1E," "Class 1E Battery Charger B," and "Voltage Regulating Xfmr Assembly B Class 1E." These devices isolate the Class 1E 250 volts-direct current (VDC) and Class 1E 120 VAC UPSS busses from the non-Class 1E 480 VAC SDG busses.

> The Class 1E battery chargers and voltage regulating transformers are Class 1E isolation devices that meet the requirements of Section 6.1.2.3 of IEEE Std. 384-2008 (IEEE 2008) by limiting the input current to an acceptable value under faulted conditions.
>
> During detailed design, the Class 1E battery chargers and voltage regulating transformers are to be specified to include electrical isolation requirements in accordance with IEEE 384-2008. The suppliers of these devices are to submit test reports to demonstrate compliance with the electrical isolation requirements of IEEE 384-2008. An IMR [Issue Management Report] has been initiated to track receipt of these reports.

The staff finds that this response satisfies the acceptance criteria of NUREG-1537, Part 2, Section 8.2, and demonstrates an adequate design basis for a preliminary design. The staff will confirm that the final design conforms to this design basis during the evaluation of SHINE's FSAR.

On the basis of its review, the staff has determined that the level of detail provided on SHINE's emergency electrical power systems demonstrates an adequate design basis for a preliminary design and satisfies the applicable acceptance criteria of NUREG-1537, Part 2, Section 8.2, allowing the staff to make the following relevant findings: (1) the design bases and functional characteristics of the IU emergency electrical power systems are sufficient for the necessary range of safety-related services, (2) the design and operating characteristics of the source of emergency electrical power are basic and reliable, ensuring availability if needed, and (3) the design of the emergency electrical power system should not interfere with safe facility shutdown or lead to IU damage if the system malfunctions during normal IU operation.

Therefore, the staff finds that the preliminary design of the SHINE emergency electrical power systems in the IF, as described in SHINE PSAR Section 8a2.2 and supplemented by the applicant's response to an RAI, is sufficient and meets the applicable regulatory requirements and guidance for of the issuance of a construction permit in accordance with 10 CFR 50.35. Further technical or design information required to complete the safety analysis (e.g., the adequacy of emergency electrical power system design features that ensure availability, including the mechanisms of startup, source of generator fuel, routing of wiring, and methods of isolation from normal services), may reasonably be left for later consideration. The staff will confirm that the final design conforms to this design basis during the evaluation of SHINE's FSAR.

8a.4.3 Probable Subjects of Technical Specifications

As stated above and described in SHINE PSAR Sections 8b.1 and 8b.2, the SHINE facility has one common normal electrical power system and one common emergency electrical power system, which serve both the IF and the RPF. Therefore, the evaluation of probable subjects of technical specifications provided below applies to both the IF and RPF.

In accordance with 10 CFR 50.34(a)(5), the staff evaluated the sufficiency of the applicant's identification and justification for the selection of those variables, conditions, or other items which are determined to be probable subjects of technical specifications for the SHINE electrical power systems, with special attention given to those items which may significantly influence the final design.

Section 8a2.1.14, "Technical Specifications," of the SHINE PSAR states that "[t]here are no potential variables, conditions, or other items that will be probable subjects of a technical specification associated with the normal electrical power system." Section 8a2.2.12, "Technical Specifications," and Section 8b.3, "Radioisotope Production Facility Electrical Power Systems Technical Specifications," indicate that probable subjects of technical specifications associated with the emergency electrical power system are provided in PSAR Chapter 14, "Technical Specifications." SHINE PSAR Section 14b.3.4, "Emergency Electrical Power," states that the "power supply is listed as a [limiting condition for operation] pursuant to 10 CFR 50.36(c)(1)."

Based on the information provided in Sections 8a2.1.14, 8a2.2.12, 8b.3, and 14b.3.4 of the SHINE PSAR, the staff finds that the identification and justification of the power supply as a limiting condition for operation (LCO) for the SHINE emergency electrical power systems is sufficient and meets the applicable regulatory requirements for of the issuance of a construction permit in accordance with 10 CFR 50.35. A detailed evaluation of technical specifications, including LCOs and surveillance requirements, will be performed during the review of SHINE's operating license application.

8a.5 Summary and Conclusions

The staff evaluated descriptions and discussions of SHINE's electrical power systems in the IF, including probable subjects of technical specifications, as described in PSAR Section 8a2 and supplemented by the applicant's responses to RAIs, and finds that the preliminary design of SHINE's electrical power systems in the IF, including the principal design criteria; design bases; and information relative to materials of construction, general arrangement, and approximate dimensions: (1) provides reasonable assurance that the final design will conform to the design basis, and (2) meets all applicable regulatory requirements and acceptance criteria in or referenced in NUREG-1537.

On the basis of these findings, the staff has made the following conclusions for of the issuance of a construction permit in accordance with 10 CFR 50.35:

(1) SHINE described the proposed design of electrical power systems in the IF, including, but not limited to, the principal architectural and engineering criteria for the design, and has identified the major features or components incorporated therein for the protection of the health and safety of the public.

(2) Further technical or design information required to complete the safety analysis of the electrical power systems in the IF may reasonably be left for later consideration the FSAR.

(3) There is reasonable assurance that, taking into consideration the site criteria contained in 10 CFR Part 100, the proposed facility can be constructed and operated at the proposed location without undue risk to the health and safety of the public.

8b Radioisotope Production Facility Electrical Power Systems

SER Section 8b, "Radioisotope Production Facility Electrical Power Systems," provides an evaluation of the preliminary design of SHINE's RPF electrical power systems as presented in SHINE PSAR Section 8b, "Radioisotope Production Facility Electrical Power Systems."

8b.1 Areas of Review

As described in SHINE PSAR Sections 8b.1 and 8b.2, respectively, the SHINE facility has one common normal electrical power system and one common emergency electrical power system, which serve both the IF and the RPF. Therefore, the areas of review described in SER Section 8a.1, “Areas of Review,” are applicable to both the SHINE IF and RPF.

8b.2 Summary of Application

As stated above and described in SHINE PSAR Sections 8b.1 and 8b.2, the SHINE facility has one common normal electrical power system and one common emergency electrical power system, which serve both the IF and the RPF. Therefore, the summary of these systems provided in SER Section 8a.2, “Summary of Application,” is applicable to both the SHINE IF and RPF.

8b.3 Regulatory Basis and Acceptance Criteria

As previously stated and described in SHINE PSAR Sections 8b.1 and 8b.2, the SHINE facility has one common normal electrical power system and one common emergency electrical power system, respectively. Therefore, the regulatory basis and acceptance criteria provided in SER Section 8a.3, “Regulatory Basis and Acceptance Criteria,” applies to both the IF and RPF.

8b.4 Review Procedures, Technical Evaluation, and Evaluation Findings

As described in SHINE PSAR Sections 8b.1 and 8b.2, the SHINE facility has one common normal electrical power system and one common emergency electrical power system that serve both the IF and the RPF. While the technical evaluation of these systems provided in this section is specific to the SHINE IF, the staff’s review considers the interface of these systems between the IF and RPF as part of a comprehensive technical evaluation. The staff notes that PSAR Section 8b has no unique content. The staff evaluated the content of PSAR Section 8a2 as it pertains to the preliminary design of functions and equipment necessary for RPF electrical power loads.

The staff performed an evaluation of the technical information presented in SHINE PSAR Section 8a2, as supplemented by the applicant’s responses to RAIs, to assess the sufficiency of the preliminary design and performance of SHINE’s electrical power systems in the RPF for of the issuance of a construction permit, in accordance with 10 CFR 50.35(a). The sufficiency of the preliminary design and performance of the SHINE IU is determined by ensuring the design and performance meet applicable regulatory requirements, guidance, and acceptance criteria, as discussed in Section 8a.3, “Regulatory Basis and Acceptance Criteria,” of this SER. A summary of the technical evaluation is described in SER Section 8b.5, “Evaluation Findings and Conclusion.”

For the purposes of issuing a construction permit, the preliminary design of the SHINE normal and emergency power systems may be adequately described at a functional or conceptual level. The staff evaluated the sufficiency of the preliminary design of the SHINE normal and emergency electrical power systems based on the applicant’s design methodology and ability to provide reasonable assurance that the final design will conform to the design bases with adequate margin for safety. As such, the staff’s evaluation of the preliminary design of SHINE’s electrical power systems does not constitute approval of the safety of any design feature or specification. Such approval will be made following the evaluation of the final design of SHINE’s

electrical power systems, as described in the FSAR, as part of SHINE's operating license application.

8b.4.1 Normal Electrical Power Systems

The staff evaluated the sufficiency of the preliminary design of SHINE's normal electrical power systems in the RPF, as described in SHINE PSAR Section 8a2.1, using the guidance and acceptance criteria from Section 8.1 of NUREG-1537, Parts 1 and 2. The staff reviewing included the off-site power service; power distribution system; standby diesel generator and supported loads; distribution equipment; facility grounding system; lightning protection system; cathodic protection system; freeze protection; and cable and raceway components and routing.

Consistent with the review procedures of NUREG-1537, Part 2, Section 8.1, the staff:

(1) Compared the design basis of the normal electrical systems in the RPF with the requirements discussed in other chapters of the PSAR, specifically Sections 4b, "Radioisotope Production Facility Description;" 5b, "Radioisotope Production Facility Cooling Systems;" 7b, "Radioisotope Production Facility Instrument & Control System;" 9b, "Radioisotope Production Facility Auxiliary Systems;" and 13b, "Radioisotope Production Facility Accident Analyses;"

(2) Confirmed that the design characteristics and components of the RPF normal electrical systems could provide the projected range of services;

(3) Analyzed possible malfunctions, accidents, and interruptions of electrical services to determine their effect on the safe RPF operation and shutdown; and

(4) Determined that the proposed redundancy of electrical circuits is sufficient to ensure safe RPF operation and shutdown and to avoid uncontrolled release of radioactive material.

The staff reviewed SHINE PSAR Section 4b to verify that the design and functional characteristics of the RPF are commensurate with the design basis. PSAR Tables 4b.3-1, "Mo Extraction and Purification System Interfaces;" 4b.4-2, "System Interfaces - Uranyl Nitrate Preparation;" 4b.4-3, "System Interfaces - Uranium Extraction;" and 4b.4-4, "System Interfaces - Thermal Denitration;" provide the system interfaces between the normal electrical power system and the processes within the RPF.

The staff reviewed SHINE PSAR Section 5b, "Radioisotope Production Facility Cooling Systems," to verify the information on normal electrical power systems related to the RPF for consistency with the information provided in Section 8b. The radioisotope process facility cooling system (RPCS) provides cooling to the RPF. PSAR Section 5a2.3.10, "RPCS Other Users," and Table 5a2.3-3, "RPCS Interfaces," describe the processes within the RPF that require cooling water. SHINE PSAR Table 5a2.3-3 describes the interface between the RPCS and the normal electrical power system.

The staff reviewed SHINE PSAR Section 7b, "Radioisotope Production Facility Instrument and Control System," to verify compliance with the electrical wiring to prevent inadvertent electromagnetic interference between the electrical power system and the safety-related instrumentation and control circuits. Based on NRC Regulatory Guide 1.180, Revision 1, "Guidelines for Evaluating Electromagnetic and Radio-Frequency Interference in Safety Related

Instrumentation and Control Systems" (Reference 48), the staff finds that the preliminary design and location of the electrical wiring will prevent inadvertent electromagnetic interference between the electrical power system and the safety-related instrumentation and control circuits. As discussed in SER Section 8a.4.1, a more detailed evaluation of this information will occur during the review of SHINE's FSAR.

Additionally, the staff evaluated the design criteria for instrumentation and control systems in the RPF to ensure the proper electrical standards are used in the systems. SHINE PSAR Table 7b.2-1, "Design Criteria for the RPF Instrumentation and Control System," provides the electrical codes used for the design of the RPF instrumentation and control system.

The staff reviewed SHINE PSAR Section 9b, "Radioisotope Production Facility Auxiliary Systems," to verify the design basis of the RPF auxiliary systems. The auxiliary systems that interface with the normal electrical power system are: the PVVS, the noble gas removal system (NGRS), the radioactive liquid waste evaporation and immobilization system (RLWE) equipment, the radioactive liquid waste storage (RLWS), and the radioactive drain system (RDS).

The staff reviewed PSAR Section 13b.2, "Analyses of Accidents with Radiological Consequences," to analyze any possible malfunction, accidents, and interruption of electrical services to determine their effect on safe facility operation on safe shutdown. The PSAR describes two accidents that could end up with radiological consequences; the release of inventory stored in the NGRS storage tanks (considered maximum hypothetical accident (MHA) in the RPF), and fire in the RPF due to an electrical equipment failure. Ducts and electrical cable penetrations will be sealed to limit the release of radioactive materials in an MHA event. In addition, to prevent the event of a fire in the RPF, SHINE will separate power and control cables for redundant trains and electrical cables will be qualified to IEEE Std. 1202, "IEEE Standard for Flame-Propagation Testing of Wire and Cable" (Reference 51), to ensure limited combustibility and limit the potential for fire ignition, growth, and spread.

The staff reviewed PSAR Section 8a2.1, "Normal Electrical Power Systems," to verify that the content of the PSAR meets the applicable criteria described in Chapter 8 of NUREG-1537. Normal electrical power systems at the RPF are designated for safe operations and shutdown of the facility. The proposed RPF is designated for fail-safe passive shutdown in the event of a LOOP. The normal electrical power systems consist of the off-site power system, PSAR Section 8a2.1.1, and onsite normal power systems, PSAR Sections 8a2.1.2 through 8a2.1.12, including the SDG, PSAR Section 8a2.1.3.

PSAR Section 8a2.1.1 describes the off-site power service. The SHINE PSAR provides a description of the substation. The system consists of a 12 kilovolts (kV) single, independent off-site circuit that feeds two utility owned 12kV - 480Y/277 VAC 3-phase transformers at 2000 kilovolt ampere (kVA) each. The loads connected to each transformer will be approximately 1500 kVA. A description of the loads that will be connected in each transformer is provided in PSAR Table 8a2.1-1, "Standby Diesel Generator Load List."

PSAR Section 8a2.1.3, "SHINE Facility Standby Diesel Generator," provides a description of the SDG that will supply power to selected loads in the event of a LOOP. SHINE stated that the availability of the SDG is not required for any of the safety functions in the SHINE facility.

The staff reviewed the cable and raceway components, as described in SHINE PSAR Section 8a2.1.10, "Cable and Raceway Components," and the raceway and cable routing, as

described in SHINE PSAR Section 8a2.1.11, “Raceway and Cable Routing,” using the National Fire Protection Association (NFPA) 70, National Electric Code (NEC) (Reference 49), as well as local codes for the design, installation, and separation of the cable raceway components. SHINE proposes to separate safety-related and nonsafety-related cables and raceway consistent with IEEE Std. 384 (Reference 50). The applicant also stated that the design will be consistent with the guidance in Regulatory Guide 1.180, Revision 1 (Reference 48), with the intention of preventing inadvertent electromagnetic interference between the electrical power system and safety-related instrumentation and control circuits in the final design. A more detailed evaluation of this information will occur during the review of SHINE’s FSAR to ensure the design is consistent with the guidance.

On the basis of its review, the staff has determined that the level of detail provided on SHINE’s normal electrical power systems in the RPF demonstrates an adequate design basis for a preliminary design and satisfies the applicable acceptance criteria of NUREG-1537, Part 2, Section 8.1, allowing the staff to make the following relevant findings: (1) the design bases and functional characteristics of the normal electrical power systems will support all required loads and (2) the design of the normal electrical power system provides that, in the event of the loss or interruption of electrical power, the facility can be safely shut down and maintained in a safe shutdown condition.

Therefore, the staff finds that the preliminary design of the SHINE normal electrical power systems in the RPF, as described in SHINE PSAR Section 8a2.1, is sufficient and meets the applicable regulatory requirements and guidance for of the issuance of a construction permit in accordance with 10 CFR 50.35. Further technical or design information required to complete the safety analysis (e.g., the design and location of electrical wiring that prevents inadvertent electromagnetic interference between the electrical power service and safety-related instrumentation and control circuits) may reasonably be left for later consideration. The staff will confirm that the final design conforms to this design basis during the evaluation of SHINE’s FSAR.

8b.4.2 Emergency Electrical Power Systems

The staff evaluated the sufficiency of the preliminary design of SHINE’s emergency electrical power systems in the RPF, as described in SHINE PSAR Section 8a2.2 and supplemented by a response to a RAI, in part, by reviewing the Class 1E UPSS; 250–VDC, Class 1E, battery subsystem; nonsafety-related loads, maintenance and testing; surveillance methods; seismic qualification; independence; single-failure criterion; and monitoring systems on the UPSS; using the guidance and acceptance criteria from Section 8.2 of NUREG-1537, Parts 1 and 2.

Consistent with the review procedures of NUREG-1537, Part 2, Section 8.2, the staff reviewed: (1) the design bases of the emergency electrical power systems, (2) the design and operating characteristics of the UPSS and equipment using IEEE standards to verify independence and isolation of circuits, for single failure criteria, and for seismic qualification of the equipment, and (3) the design of the emergency electrical power system.

On the basis of its review, the staff has determined that the level of detail provided on SHINE's emergency electrical power systems demonstrates an adequate design basis for a preliminary design and satisfies the applicable acceptance criteria of NUREG-1537, Part 2, Section 8.2, allowing the staff to make the following relevant findings:

(1) The design bases and functional characteristics of the RPF emergency electrical power systems are sufficient to provide the necessary range of safety-related services.

(2) The design and operating characteristics of the source of emergency electrical power are basic and reliable, ensuring availability if needed.

(3) The design of the emergency electrical power system should not interfere with safe facility shutdown or lead to RPF damage if the system malfunctions during normal RPF operation.

Therefore, the staff finds that the preliminary design of the SHINE emergency electrical power systems in the RPF, as described in SHINE PSAR Section 8a2.2 and supplemented by the applicant's response to an RAI, is sufficient and meets the applicable regulatory requirements and guidance for of the issuance of a construction permit in accordance with 10 CFR 50.35. Further technical or design information required to complete the safety analysis (e.g., hydrogen generation rates) may reasonably be left for later consideration. The staff will confirm that the final design conforms to this design basis during the evaluation of SHINE's FSAR.

8b.4.3 Probable Subjects of Technical Specifications

As stated above and described in SHINE PSAR Sections 8b.1 and 8b.2, the SHINE facility has one common normal electrical power system and one common emergency electrical power system, which serve both the IF and the RPF. Therefore, the evaluation of probable subjects of technical specifications provided in SER Section 8a.4.3, "Probable Subjects of Technical Specifications," applies to both the IF and RPF.

8b.5 Evaluation Findings and Conclusions

The staff evaluated descriptions and discussions of SHINE's electrical power systems in the RPF, including probable subjects of technical specifications, as described in PSAR Section 8a2 and 8b.3 and supplemented by the applicant's responses to RAIs, and finds that the preliminary design of SHINE's electrical power systems in the RPF, including the principal design criteria; design bases; and information relative to materials of construction, general arrangement, and approximate dimensions: (1) provides reasonable assurance that the final design will conform to the design basis, and (2) meets all applicable regulatory requirements and acceptance criteria in or referenced in NUREG-1537.

On the basis of these findings, the staff has made the following conclusions for of the issuance of a construction permit in accordance with 10 CFR 50.35:

(1) SHINE described the proposed design of electrical power systems in the RPF, including, but not limited to, the principal architectural and engineering criteria for the design, and has identified the major features or components incorporated therein for the protection of the health and safety of the public.

(2) Further technical or design information required to complete the safety analysis of the electrical power systems in the RPF may reasonably be left for later consideration the FSAR.

(3) There is reasonable assurance that, taking into consideration the site criteria contained in 10 CFR Part 100, the proposed facility can be constructed and operated at the proposed location without undue risk to the health and safety of the public.

9.0 AUXILIARY SYSTEMS

The preliminary design description of the auxiliary systems in the PSAR focuses on those structures, systems, components, and associated equipment that constitute the auxiliary safety systems and includes the overall design bases, system classifications, functional requirements, and system architecture. The auxiliary systems are designed for operation of the SHINE Medical Technologies, Inc. (SHINE or the applicant), irradiation facility (IF) and radioisotope production facility (RPF).

This chapter of the SHINE construction permit safety evaluation report (SER) describes the review and evaluation by the U.S. Nuclear Regulatory Commission (NRC) staff (the staff) of the preliminary design of the SHINE auxiliary systems as presented in Chapter 9, "Auxiliary Systems," of the SHINE Preliminary Safety Analysis Report (PSAR), and supplemented by the applicant's responses to requests for additional information (RAIs).

9a Irradiation Facility Auxiliary Systems

SER Section 9a, "Irradiation Facility Auxiliary Systems," provides an evaluation of the preliminary design of SHINE's IF auxiliary systems as presented in SHINE PSAR Section 9a2, "Irradiation Facility Auxiliary Systems."

9a.1 Areas of Review

The staff reviewed SHINE PSAR Section 9a2 against applicable regulatory requirements using regulatory guidance and standards to assess the sufficiency of the preliminary design and performance of SHINE's irradiation facility auxiliary systems. As part of this review, the staff evaluated descriptions and discussions of SHINE's auxiliary systems, with special attention to design and operating characteristics, unusual or novel design features, and principal safety considerations. The preliminary design of SHINE's auxiliary systems was evaluated to ensure the sufficiency of principal design criteria; design bases; and information relative to materials of construction, general arrangement, and approximate dimensions, sufficient to provide reasonable assurance that the final design will conform to the design basis. In addition, the staff reviewed SHINE's identification and justification for the selection of those variables, conditions, or other items which are determined to be probable subjects of technical specifications for the facility, with special attention given to those items which may significantly influence the final design. The following sections of the SER describe the areas reviewed.

Section 9a.4.1, "Heating, Ventilation, and Air Conditioning Systems," provides an evaluation of SHINE's radiologically controlled area and non-radiological area ventilation systems. Within these review areas, the staff assessed the characteristics and functions of the systems, the sources of radioactive materials that could become airborne during the full range of operation, and the way the systems are designed to affect the distribution and concentration of those materials, the features of the systems designed to limit exposures of personnel to radiation in the restricted area as a result of the full range of facility operation, the features of the HVAC system and associated facility structure designed to prevent inadvertent or uncontrolled release of airborne radioactive material to areas outside the radiologically controlled area (RCA) and to the unrestricted environment.

Section 9a.4.2, “Handling and Storage of Target Solution,” provides an evaluation of SHINE’s program for handling and storage of special nuclear material (SNM) and byproducts within the target solution and within the irradiation facility. Within this review area, the staff assessed the equipment, systems, methods, and administrative procedures for receipt of uranium, the systems and methods for movement, physical control, and storage of target solution within the facility, including analyses to prevent criticality.

Section 9a.4.3, “Fire Protection Systems and Programs,” provides an evaluation of SHINE’s fire protection system. Within this review area, the staff assessed the potential causes and consequences of fires at the facility, the fire protection plans and protective equipment used to limit the consequences of a fire, including defense in depth in the event of escalation of a fire, the passive designs or protective barriers planned to limit fire consequences, including features of the facility that could affect a safe facility shutdown or release radioactive material in the event of a continuing fire, the source of facility fire protection brigades and their training and the summary of the more detailed discussions of these personnel and offsite fire protection forces in the facility emergency plan, and compliance with local and national fire and building codes applicable to fire protection.

Section 9a.4.4, “Communication Systems,” provides an evaluation of SHINE’s communication systems between essential areas of the SHINE facility, as well as locations remote to the facility. Within this review area, the staff assessed the methods of communication between all necessary locations during the full range of facility operations and during emergencies.

Section 9a.4.5, “Possession and Use of Byproduct, Source, and Special Nuclear Material,” provides an evaluation of SHINE’s auxiliary systems within the IF that normally interact with byproduct, source, and SNM. Within this review area, the staff assessed the types and quantities of radionuclides authorized, the general types of processing, or packaging for shipments, the provisions for controlling and disposing of radioactive wastes, including special drains for liquids and chemicals, and air exhaust hoods for airborne materials, and the provisions for radiation protection, including shielding materials and radiation survey methods.

The applicant has deferred submittal of Section 9a.4.6, “Cover Gas Control in Closed Primary Coolant Systems,” which will be provided and will be reviewed in the FSAR.

Section 9a.4.7, “Other Auxiliary Systems,” provides an evaluation of SHINE’s other auxiliary systems in the IF that are not described in other chapters of SHINE PSAR. Within this review area, the staff assessed the systems description, including drawings and specifications of principal components and any special materials, operational analysis and safety function, and instrumentation and control requirements not described in SHINE PSAR Chapter 7, “Instrument and Control Systems.”

9a.2 Summary of Application

Section 9a2.1, “Heating, Ventilation, and Air Conditioning Systems,” of SHINE’s PSAR describes the radiologically controlled area (RCA) and non-radiological area ventilation systems. The heating, ventilation, and air conditioning (HVAC) systems provide ventilation to three areas in the radiologically controlled area (RCA) called RVZ1 (i.e., RCA ventilation zone 1), RVZ2, and RVZ3. RVZ1 includes the irradiation unit (IU) cells and the hot cells. RVZ2 includes operating areas, workrooms, and fume hoods. RVZ3 includes areas where contamination is not expected to occur under normal operating conditions. Thus, RVZ1 encompasses those areas with the highest potential for contamination with RVZ2 and RVZ3 encompassing areas of lesser potential

contamination (RVZ3 being the least). Therefore, RVZ3 is maintained at a higher pressure than RVZ2, which is maintained at a higher pressure than RVZ1 so that airflow is toward areas of increasing contamination potential.

The HVAC system also provides ventilation to the non-RCA called FVZ4 (facility ventilation zone 4).

The facility chilled water supply and distribution system (FCHS), is a closed-loop air-cooled chilled water system that provides cooling water to the cooling coils that are located outside the RCA boundary. The FCHS also supplies water to the radioisotope production facility cooling system (RPCS) heat exchangers.

The facility heating water system (FHWS) provides heated water (via a gas-fired boiler) to the RCA and non-RCA of the SHINE facility.

Testing of the HVAC systems will be done as appropriate. Technical specifications are discussed in PSAR Chapter 14, “Technical Specifications.”

Section 9a2.2, “Handling and Storage of Target Solution,” of SHINE PSAR describes the handling and storage of SNM and byproducts in the target solution within the IF. The preparation of the target solution is located outside of the IU cell. The piping used for transfer of the target solution to the IF cell includes penetrations of the cell through redundant sets of isolation valves. Target solution must meet the chemical property requirements discussed in PSAR Section 4a2.2.1 before it is transferred from the target solution hold tank to the target solution vessel. If the target solution is not within the required chemical specifications, operators make appropriate adjustments while the target solution is being prepared in the Target Solution Preparation System (TSPS). The storage and process tanks in the TSPS use double-contingency, criticality-safe controls.

Section 9a2.3, “Fire Protection Systems and Programs,” of SHINE PSAR provides a description of the facility fire protection system (FFPS), which includes systems for early detection and notification of a fire, and provides the capability to extinguish fires in any SHINE facility area, to protect SHINE facility personnel and limit fire damage. The SHINE fire hazards analysis (FHA) is discussed in SHINE PSAR Section 9a2.3.4, “Fire Hazards Analysis.” SHINE Fire Protection Training Plan and Emergency Plan will be submitted with the SHINE FSAR. Technical specifications are discussed in SHINE PSAR Chapter 14.

Section 9a2.4, “Communication Systems,” of SHINE PSAR provides a description of the communication systems, which includes a normal communication system with paging, alarming, and party-line-type voice communications. A private exchange line, which is powered separately from the normal communications system, serves as a backup to the normal communications system. The communication system also includes a sound-powered phone system which operates without a power source and is not affected by loss of power to the facility, and a radio system operating on ultra-high frequency bands. The applicant stated that the SHINE FSAR will provide more detailed descriptions of the communication systems, including drawings and specifications. The applicant also stated that the systems will be tested, as appropriate, and that it has been determined that the communications systems will not be in the technical specifications for the SHINE facility.

Section 9a2.5, “Possession and Use of Byproduct, Source, and Special Nuclear Material,” of SHINE PSAR provides a description of the byproduct, source, and SNM used in the IF. The

review of the TPS is provided in SER Section 9a2.7, “Other Auxiliary Systems.” The byproduct material present in the TSPS and the Target Solution Vessel (TSV) are fission products. The review of the TSPS is provided in SER Section 9b.2.5, “Possession and Use of Byproduct, Source, and Special Nuclear Material,” and the review of the TSV is provided in SER Section 4a2.4, “Target Solution Vessel and Light Water Pool.” Neutron multiplication occurs within the neutron multiplier, which is a part of the Subcritical Assembly System (SCAS). The review of the SCAS in provided in SER Chapter 4. The SNM is the small amount of plutonium (Pu) produced during the neutron irradiation.

In SHINE PSAR Section 9a2.6, “Cover Gas Control in Closed Primary Coolant Systems,” the applicant stated that the primary closed loop cooling system (PCLS) is a closed loop cooling system that provides cooling to the TSV. Details for the cover gas control will be provided in the SHINE FSAR.

Section 9a2.7, “Other Auxiliary Systems,” of SHINE PSAR describes the Tritium Purification System (TPS), whose purpose is to remove impurities in the tritium, after it has been used in the neutron driver assembly system (NDAS) so that it can be reused. The TPS process steps are conducted inside of two gloveboxes that are sized such that one glovebox can accommodate the process needs of all eight NDAS neutron drivers. Since tritium is hydrogen and is flammable, the glovebox is operated in a nitrogen environment during TPS operation. The glovebox atmosphere is cooled via a water chiller system. The glovebox atmosphere is monitored/alarmed for oxygen. The area around the gloveboxes and the TPS piping is monitored/alarmed for tritium to detect any leaks. In addition, TPS piping is maintained at sub-atmospheric pressures.

SHINE PSAR Section 9b contains a summary description of the RPF auxiliary systems. It describes the design of the RPF auxiliary systems and the processes employed within it, includes the principal safety considerations that were factored into the RPF design, construction, and operation.

9a.3 Regulatory Basis and Acceptance Criteria

The regulatory basis and acceptance criteria provided below apply to both the IF and the RPF.

The staff reviewed SHINE PSAR Sections 9a.2 and 9b against applicable regulatory requirements, using regulatory guidance and standards, to assess the sufficiency of the preliminary design and performance of SHINE’s auxiliary systems for the issuance of a construction permit. In accordance with paragraph (a) of Title 10 of the *Code of Federal Regulations* (10 CFR) 50.35, “Issuance of Construction Permits,” a construction permit authorizing SHINE to proceed with construction may be issued once the following findings have been made:

(1) SHINE has described the proposed design of the facility, including, but not limited to, the principal architectural and engineering criteria for the design, and has identified the major features or components incorporated therein for the protection of the health and safety of the public.

(2) Such further technical or design information as may be required to complete the safety analysis, and which can reasonably be left for later consideration, will be supplied in the final safety analysis report (FSAR).

(3) Safety features or components, if any, which require research and development have been described by SHINE and a research and development program will be conducted that is reasonably designed to resolve any safety questions associated with such features or components.

(4) On the basis of the foregoing, there is reasonable assurance that: (i) such safety questions will be satisfactorily resolved at or before the latest date stated in the application for completion of construction of the proposed facility, and (ii) taking into consideration the site criteria contained in 10 CFR Part 100, the proposed facility can be constructed and operated at the proposed location without undue risk to the health and safety of the public.

With respect to the last of these findings, the staff notes that the requirements of 10 CFR Part 100 are specific to nuclear power reactors, and therefore not applicable to the SHINE facility. However, the staff evaluated SHINE's site specific conditions using site criteria similar to 10 CFR Part 100, by using the guidance in NUREG-1537. The staff's review evaluated the geography and demography of the site; nearby industrial, transportation, and military facilities; site meteorology; site hydrology; and site geology, seismology, and geotechnical engineering to ensure that issuance of the construction permit will not be inimical to public health and safety.

The staff's evaluation of the preliminary design of SHINE's auxiliary systems does not constitute approval of the safety of any design feature or specification. Such approval will be made following the evaluation of the final design of SHINE's auxiliary systems as described in the FSAR as part of SHINE's operating license application

9a.3.1 Applicable Regulatory Requirements

The applicable regulatory requirements for the evaluation of SHINE's auxiliary systems are as follows:

- 10 CFR 50.34, "Contents of applications; technical information," paragraph (a), "Preliminary safety analysis report."

- 10 CFR 50.40, "Common Standards."

9a.3.2 Regulatory Guidance and Acceptance Criteria

In applying guidance and acceptance criteria, the staff used its judgment as to which acceptance criteria were relevant to SHINE's proposed facility, as much of this guidance was originally developed for nuclear reactors. Given the similarities in SHINE's proposed facility and non-power research reactors, the staff used established guidance documents and the Commission's regulations to determine the acceptance criteria for demonstrating compliance with 10 CFR regulatory requirements. For example, the staff used:

- NUREG-1537, Part 1, "Guidelines for Preparing and Reviewing Applications for the Licensing of Non-Power Reactors, Format and Content," issued February 1996 (Reference 4).

- NUREG-1537, Part 2, "Guidelines for Preparing and Reviewing Applications for the Licensing of Non-Power Reactors, Standard Review Plan and Acceptance Criteria," issued February 1996 (Reference 5).

- "Final Interim Staff Guidance [ISG] Augmenting NUREG-1537, Part 1, 'Guidelines for Preparing and Reviewing Applications for the Licensing of Non-Power Reactors: Format and Content,' for Licensing Radioisotope Production Facilities and Aqueous Homogeneous Reactors," dated October 17, 2012 (Reference 6).

- "Final Interim Staff Guidance Augmenting NUREG-1537, Part 2, 'Guidelines for Preparing and Reviewing Applications for the Licensing of Non-Power Reactors: Standard Review Plan and Acceptance Criteria,' for Licensing Radioisotope Production Facilities and Aqueous Homogeneous Reactors," dated October 17, 2012 (Reference 7).

As stated in the ISG Augmenting NUREG-1537, the staff determined that certain guidance originally developed for heterogeneous non-power research and test reactors is applicable to aqueous homogenous facilities and production facilities. SHINE used this guidance to inform the design of its facility and prepare its PSAR. The staff's use of reactor-based guidance in its evaluation of the SHINE PSAR is consistent with the ISG Augmenting NUREG-1537.

As appropriate, additional guidance (e.g., NRC regulatory guides, Institute of Electrical and Electronics Engineers (IEEE) standards, American National Standards Institute/American Nuclear Society (ANSI/ANS) standards) has been used in the staff's review of SHINE's PSAR. The use of additional guidance is based on the technical judgment of the reviewer, as well as references in NUREG-1537, Parts 1 and 2; the ISG Augmenting NUREG-1537, Parts 1 and 2; and the SHINE PSAR. Additional guidance documents used to evaluate SHINE's PSAR are provided as references in Appendix B of this SER.

9a.4 Review Procedures, Technical Evaluation, and Evaluation Findings

The staff performed an evaluation of the technical information presented in SHINE PSAR Section 9a2, as supplemented by the applicant's responses to RAIs, to assess the sufficiency of the preliminary design and performance of SHINE's auxiliary systems in the IF for the issuance of a construction permit, in accordance with 10 CFR 50.35(a). The sufficiency of the preliminary design and performance of SHINE's auxiliary systems is determined by ensuring the design and performance meet applicable regulatory requirements, guidance, and acceptance criteria, as discussed in Section 9a.3, "Regulatory Basis and Acceptance Criteria," of this SER. A summary of the technical evaluations is described in SER Section 9a.5, "Summary and Conclusions."

For the purposes of issuing a construction permit, the preliminary design of the SHINE auxiliary systems may be adequately described at a functional or conceptual level. The staff evaluated the sufficiency of the preliminary design of the SHINE auxiliary systems based on the applicant's design methodology and ability to provide reasonable assurance that the final design will conform to the design bases with adequate margin for safety. As such, the staff's evaluation of the preliminary design of SHINE's auxiliary systems does not constitute approval of the safety of any design feature or specification. Such approval will be made following the evaluation of the final design of SHINE's auxiliary systems, as described in the FSAR, as part of SHINE's operating license application.

9a.4.1 Heating, Ventilation, and Air Conditioning Systems

The staff evaluated the sufficiency of the preliminary design of SHINE's heating, ventilation, and air conditioning (HVAC) systems, as described in SHINE PSAR Section 9a2.1, by reviewing the radiologically controlled and non-radiological areas ventilation system, the chilled water supply and distribution system, the heating water system, using the guidance and acceptance criteria from Section 9.1, "Heating, Ventilation, and Air Conditioning Systems," of NUREG-1537, Parts 1 and 2.

Consistent with the review procedures in NUREG-1537, Part 2, Section 9.1, the staff evaluated SHINE's HVAC system for all operations and functions during the full range of facility operations. The staff compared the design bases with requirements from other chapters of the PSAR, including Chapters 4, "Irradiation Unit And Radioisotope Production Facility Description," Chapter 6, "Engineered Safety Features," Chapter 7, "Instrumentation and Control Systems," Chapter 11, "Radiation Protection Program and Waste Management," and Chapter 13, "Accident Analysis," to determine whether the HVAC system designs agree with the acceptance criteria for the full range of facility operations.

NUREG-1537, Part 2, Section 9.1, "Heating, Ventilation, and Air Conditioning Systems," Acceptance Criteria, states, in part: "The design and operating features of the system should ensure that no uncontrolled release of airborne radioactive material to the unrestricted environment could occur."

SHINE PSAR, Section 9a2.1.1, "Radiologically Controlled Area Ventilation System," states that RCA Zone 2 Supply Air supplies air to RCA Ventilation System Zone 2 and RCA Ventilation System Zone 3, but there is no mention of where RCA Ventilation System Zone 1 gets its supply air from. SHINE PSAR, Figure 9a2.1-2, has an arrow after the supply fans that states: "Supply Air Flows to Additional Rooms, but provides no clarification as to what rooms/areas receive the air. PSAR, Figure 9a2.1-1 has an arrow going into the irradiation unit cell and an arrow going into the hot cell. Both arrows have the following statement: "Transfer Air from Zone 2." It is not clear if the supply to the irradiation unit and hot cells is via dedicated ductwork or from ambient air drawn from the room. The staff also noted that while SHINE Section 9a2.1.2, "Non-Radiological Area Ventilation System," discusses the Facility Ventilation Zone 4 (FVZ4) system and further states that this is a non-radiological controlled area ventilation system, additional information, on the potential for contamination in this area, was needed to determine the adequacy of the FVZ4 ventilation system.

Therefore, in RAI 9a2.1-1 (Reference 14), the staff requested that PSAR Section 9a2, and the flow diagrams (Figures 9a2.1-1 and 9a2.1-2) be revised to clarify the ambiguities with respect to the operation of RCA Ventilation System Zone 1 (RVZ1) and RCA Ventilation System Zone 2 (RVZ2), and provide an additional flow diagram for RCA Ventilation System Zone 3 (RVZ3).

In response to RAI 9a2.1-1 (Reference 21), the applicant provided some additional details of the operation of RVZ1, RVZ2, and RVZ3.

The staff noted that while Section 9a2.1.2, "Non-Radiological Area Ventilation System," discusses the Facility Ventilation Zone 4 (FVZ4) system and further states that this is a non-radiological controlled area ventilation system, the staff needed additional information on the potential for contamination in this area to determine the adequacy of the FVZ4 ventilation. Therefore, in RAI 9a2.1-2 (Reference 14), the staff requested additional information on the

FVZ4 ventilation system, including information on where the system exhausts, whether there are any radiation detectors on the exhaust, and a FVZ4 flow diagram.

In RAI 9a2.1-3 (Reference 17), the staff delineated how the applicant's response to RAI 9a2.1-2 does not supply sufficient information about the configuration and function of RVZ1, RVZ2, and RVZ3. In response (Reference 26), the applicant provided the necessary information with descriptions of each system, a revised flow chart of the RCA HVAC showing the interrelationship between RVZ1, RVZ2, and RVZ3 and a marked-up general arrangement showing the areas ventilated by RVZ1, RVZ2, RVZ3, and FVZ4.

Included in the response was the pressure relationship between the four HVAC zones and ambient atmospheric pressure as follows:

$$P_{RVZ1} < P_{RVZ2} < P_{RVZ3} < P_{ambient} < P_{FVZ4}$$

The applicant also clarified that RVZ3 consisted of only the airlocks, provided a list of the airlocks, and provided the location (including labeling) of the airlocks on the marked-up general arrangement, which clearly showed that the airlocks are within the Seismic Category I RCA boundary. Finally, the applicant stated that the airlocks do not have fans to maintain their air pressure, but rather airflow control valves that are supplied by the RVZ2 air-handling units with the RVZ3 exhausted air being transferred into the RVZ2 ventilated area. The applicant further clarified their function by stating that the airlocks are the tertiary confinement zone for the RCA.

While the applicant's responses to the above RAIs are sufficient, there are still the issues of control room habitability and RVZ3 safety classification as discussed in SER Section 3.5. The staff will confirm that the final design conforms to the design basis of NUREG-1537, Part 2, Section 9.1, during the evaluation of SHINE's FSAR.

The staff finds that the level of detail provided on SHINE's heating, ventilation, and air conditioning systems demonstrates an adequate design basis for a preliminary design and satisfies the applicable acceptance criteria of NUREG-1537, Part 2, Section 9.2, allowing the staff to make the following relevant findings:

- A review of the design bases and functional and safety characteristics of the HVAC systems shows that the proposed systems are adequate to control the release of airborne radioactive effluents during the full range of facility operations in compliance with the regulations.

- The applicant has discussed all sources of radioactive material that could become airborne in the facility from a full range of facility operations. The analyses demonstrate that the radioactive material is controlled by the HVAC system and could not inadvertently escape from the RCA. They show that the distributions and concentrations of the airborne radionuclides in the facility are limited by operation of the HVAC system so that during the full range of facility operations, no potential occupational exposures would exceed the design bases derived in Chapter 11 of SHINE PSAR.

- The applicant has considered the height and flow rate of the stack that exhausts facility air to the unrestricted environment for the design-basis dose rates derived in Chapter 11 of SHINE PSAR for the maximum exposed personnel in the unrestricted environment.

- The HVAC system is an integral part of a confinement system at the facility. The design of the confinement system and analysis of its operation ensure that it will function to limit normal airborne radioactive material to the extent analyzed in this chapter and Chapter 11 of SHINE PSAR. The potential radiation doses will not exceed the limits of 10 CFR Part 20 and are consistent with the facility as low as is reasonably achievable (ALARA) program.

Therefore, the staff finds that the preliminary design of the SHINE heating, ventilation, and air conditioning systems, as described in SHINE PSAR Section 9a2.1, is sufficient and meets the applicable regulatory requirements and guidance for the issuance of a construction permit in accordance with 10 CFR 50.35 and 50.40. However, the staff is tracking SHINE's responses to RAIs 9a2.1-1 through 9a2.1-3 (including Table 9a2.1-3-1, and Figures 9a2.1-2-1, 9a2.1-3-1, and 9a2.1-3-2) as regulatory commitments in Appendix A of this SER and will confirm their resolution in the SHINE FSAR. The staff will confirm that the final design conforms to this design basis during the evaluation of SHINE's FSAR.

9a.4.2 Handling and Storage of Target Solution

The staff evaluated the sufficiency of the preliminary design of SHINE's handling and storage of the target solution, as described in SHINE PSAR Section 9a2.2, by reviewing the preparation, storage and handling of the target solution, the equipment used for loading/unloading the TSV with target solution, and the storage of SNM, using the guidance and acceptance criteria from Section 9.2, "Handling and Storage of Reactor Fuel," of NUREG-1537, Parts 1 and 2.

Consistent with the review procedures of NUREG-1537, Part 2, Section 9.2, the staff evaluated the systems and methods used to handle and store new and irradiated target solution, compared the design bases in this and other chapters of the PSAR (such as Chapters 4, 6, 11, and 13) with the requirements of 10 CFR 50.34(a) and 10 CFR Part 20, and focused on the design features that control radiation and prevent criticality.

On the basis of its review, the staff has determined that the level of detail provided on SHINE's handling and storage of the target solution demonstrates an adequate design basis for a preliminary design and satisfies the applicable acceptance criteria of NUREG-1537, Part 2, Section 9.2, allowing the staff to make the following relevant findings:

(1) As evaluated in SER Section 6b3, the analyses show that fuel storage features will ensure that criticality cannot occur. Plans to implement the applicable requirements of 10 CFR 70.24 for criticality monitoring are acceptable.

(2) Tanks, pumps, and procedures for inserting and removing target solution from the TSVs are specially designed to avoid loss or damage to target solution.

(3) As evaluated in SER Chapter 11, methods for assessing irradiated fuel radioactivity and potential exposure rates are adequate to avoid overexposure of the staff. Methods for shielding and storing irradiated fuel give reasonable assurance that potential personnel doses will not exceed the regulatory limits of 10 CFR Part 20 and are consistent with the facility ALARA program.

Therefore, the staff finds that the preliminary design of the SHINE handling and storage of the target solution in the IF, as described in SHINE PSAR Section 9a2.2, is sufficient and meets the applicable regulatory requirements and guidance for the issuance of a construction permit in

accordance with 10 CFR 50.35 and 50.40. Further technical or design information required to complete the safety analysis may reasonably be left for later consideration. The staff will confirm that the final design conforms to this design basis during the evaluation of SHINE's FSAR and that technical specifications will contain limitations on storage conditions necessary to ensure sub-criticality and to administratively and physically control the target solution.

9a.4.3 Fire Protection Systems and Programs

The staff evaluated the sufficiency of the preliminary design of SHINE's fire protection systems and programs, as described in SHINE PSAR Section 9a2.3, in part, by reviewing the design bases, components of the system, and the fire hazard analysis, using the guidance and acceptance criteria from Section 9.3, "Fire Protection Systems and Programs," of NUREG-1537, Parts 1 and 2.

Consistent with the review procedures of NUREG-1537, Part 2, Section 9.3, the staff evaluated the discussions of potential fires; provisions for early detection, including during those times when areas are not occupied; methods for isolating, suppressing, and extinguishing fires; passive features designed into the facility to limit fire consequences; response organization training and availability to fight fires as detailed in the emergency plan; designs of facility systems that can ensure safe facility shutdown in the event of fire; and potential radiological consequences to the public, the staff, and the environment if firefighting efforts are unsuccessful.

The Fire Protection Training Plan and the Emergency Plan will be reviewed when the SHINE FSAR is submitted.

As part of its evaluation, the staff issued RAIs to the applicant. The RAIs and applicant's responses are summarized below.

In RAI 9a2.3-1 (Reference 14), the staff requested that the applicant identify which fire detection and suppression systems are necessary to prevent or mitigate high or intermediate consequence accidents and describe and commit to applying management measures that will assure that these systems and components are constructed, procured, installed, and tested to ensure that they will be available and reliable to perform their intended functions when needed.

In response to RAI 9a2.3-1 (Reference 21), the applicant stated that there are no fire detection or suppression systems that are credited with prevention and/or mitigation of potential accident scenarios. The applicant went on to state that the fire protection program will be designed, constructed, and maintained consistent with the applicable National Fire Protection Association (NFPA) standards. Finally, the applicant stated that the fire protection program will be included in the Administrative Controls section of the SHINE technical specifications, and that the fire protection system components are subject to the SHINE Quality Assurance Program, as described in the SHINE Quality Assurance Program Description (QAPD). The staff finds that this response satisfies the acceptance criteria of NUREG-1537, Part 2, Section 9.3. The staff will confirm that the final design conforms to this design basis during the evaluation of SHINE's FSAR.

Because of the configuration of Fire Area 6 (a long "L" shaped corridor), in RAI 9a2.3-2 (Reference 14), the staff requested additional information on personnel evacuation.

In response to RAI 9a2.3-2 (Reference 21), the applicant responded that the corridor has fire detection and water suppression and the egress distances meet the requirements of the International Building Code (IBC) and the Life Safety Code (LSC). The staff finds that this response satisfies the acceptance criteria of NUREG-1537, Part 2, Section 9.3. The staff will confirm that the final design conforms to this design basis during the evaluation of SHINE's FSAR.

The staff noted that Fire Areas (FA) 1 and 3 utilize gaseous fire suppression systems, which could result in asphyxiation during a release. Therefore, in RAI 9a2.3-3 (Reference 14), the staff requested that the applicant provide clarification on how potential asphyxiation during a release of the gaseous suppression systems has been addressed.

In response to RAI 9a2.3-3 (Reference 21), the applicant responded that automatic gaseous fire suppression systems will be equipped with a pre-discharge alarm system and a discharge delay to permit personnel egress. In addition, warning signs will be affixed in appropriate locations for areas protected by an automatic gaseous fire suppression system. The staff finds that this response satisfies the acceptance criteria of NUREG-1537, Part 2, Section 9.3. The staff will confirm that the final design conforms to this design basis during the evaluation of SHINE's FSAR.

The staff noted that in radiation areas, the smoke detection capability of ionization detectors could be adversely affected and that photoelectric smoke detector capability can be affected in areas of dust/particulates. Therefore, in RAI 9a2.3-4 (Reference 14), the staff requested clarification on the basis of choosing detectors, and what maintenance program will be used to assure that the detectors function properly.

In response to RAI 9a2.3-4 (Reference 21), the applicant stated that fire detection systems are designed, installed, located, inspected, tested, and maintained consistent with NFPA 72, "National Fire Alarm and Signaling Code." The applicant further stated that it would ensure that appropriate fire detection equipment is placed in radiation areas and areas of dust/particulates. The staff finds that this response satisfies the acceptance criteria of NUREG-1537, Part 2, Section 9.3. The staff will confirm that the final design conforms to this design basis during the evaluation of SHINE's FSAR.

The staff noted that the neutron moderation capability of firefighting foam is not discussed in the SHINE PSAR. Therefore, in RAI 9a2.3-5 (Reference 14), the staff requested information on the moderation capabilities of firefighting foams because local fire departments may use foam as part of their firefighting repertoire. The staff also requested information on foam, if any, that can or will be used in the facility and what training is proposed for the fire brigade and for offsite fire departments that may provide assistance.

In response to RAI 9a2.3-5 (Reference 21), the applicant responded that there are no firefighting foam systems within the RCA in the current design of the facility. The applicant added that discussions have been initiated with Rock County Emergency Management. The Rock County 911 Communications Center will have a response information binder specific to emergency response at the SHINE facility. The applicant also stated that it will ensure that the response information binder specific to emergency response at the SHINE facility does not allow off-site fire support organizations to use firefighting foam within the SHINE RCA, and will ensure that the Rock County 911 Communications Center's SHINE-specific response information binder provides specific guidance on the use of firefighting foam at the SHINE facility. Finally, the applicant stated that periodic training will be provided to both SHINE fire

brigade members and off-site fire support organizations regarding permitted manual fire suppression techniques at the SHINE facility.

The staff noted that the Boiler Room (FA-17), which has a natural gas pipeline supplying the boiler, is adjacent (i.e., shares a common wall) to the Fire Brigade/Hazmat Room (FA-16) that contains the Fire Zone Panels. Therefore, in RAI 9a2.3-6 (Reference 14), the staff requested additional information on the potential for a fire in the Boiler Room and asked the applicant to provide, in its response, the effects of the pipeline gas combustible load (until the pipeline can be shut off outside the Boiler Room) on the FA-17 and on the rest of the building.

In response to RAI 9a2.3-6 (Reference 21), the applicant responded that the walls, floors, and ceilings of the FA-17 boundary have a 3-hour fire resistive rating as required by a high combustible loading in the room and where an adjacent room contains equipment or systems from a different safety train. The 3-hour fire barrier provides adequate time for operators to manually isolate the natural gas supply, if required. The applicant further stated that the potential release of natural gas into FA-17 will be limited by the installation of safety controls, as required by Wisconsin Administrative Code Chapter SPS 341.

While the above response is sufficient for the issuance of a construction permit, at the operating license stage, the effects of the pipeline gas combustible load (until the pipeline can be shut off outside the boiler room) on the boiler room and adjacent fire areas needs to be discussed in the FSAR. The staff will confirm that the final design conforms to this design basis during the evaluation of SHINE's FSAR.

The staff noted that SHINE PSAR Figure 9a2.3-1 indicates that there are fire zones inside of FA-1 and FA-2. However, the fire zones are not numbered. In RAI 9a2.3-7 (Reference 14), the staff requested information indicating whether the fire zones will be numbered, and whether the fire zone numbers will be unique. Additionally, the staff requested that the applicant provide information indicating whether the FHA will provide assessments of each fire zone.

In response to RAI 9a2.3-7 (Reference 21), the applicant stated that each fire zone will be uniquely numbered and as the detailed design is completed, the FHA will be revised and updated. Also, the final FHA will provide an assessment of each fire zone.

On the basis of its review, the staff has determined that the level of detail provided on SHINE's fire protection systems and programs demonstrates an adequate design basis for a preliminary design and satisfies the applicable acceptance criteria of NUREG-1537, Part 2, Section 9.2, allowing the staff to make the following relevant findings: (1) the fire protection plan for preventing fires ensures that the facility meets local and national fire and building codes, (2) the systems designed to detect and combat fires at the facility can function as described and limit damage and consequences at any time, (3) the potential radiological consequences of a fire will not prevent safe facility shutdown, and (4) any release of radioactive material as a result of fire would not cause radiation exposures that exceeded the requirements of 10 CFR Part 20.

Therefore, the staff finds that the preliminary design of the SHINE fire protection systems and programs, as described in SHINE PSAR Section 9a2.3, is sufficient and meets the applicable regulatory requirements and guidance for the issuance of a construction permit in accordance with 10 CFR 50.35 and 50.40. Further technical or design information required to complete the safety analysis may reasonably be left for later consideration. The staff will confirm that the final design conforms to this design basis during the evaluation of SHINE's FSAR.

9a.4.4 Communication Systems

The staff evaluated the sufficiency of the preliminary design of SHINE's communication systems, as described in SHINE PSAR Section 9a2.4, in part, by reviewing the on-site and off-site communication systems, using the guidance and acceptance criteria from Section 9.4, "Communication Systems" of NUREG-1537, Parts 1 and 2.

Consistent with the review procedures of NUREG-1537, Part 2, Section 9.4, the staff evaluated the design bases; system description; operational analysis and safety function; and required technical specifications and their bases, including testing and surveillance.

On the basis of its review, the staff has determined that the level of detail provided on SHINE's communication systems demonstrates an adequate design basis for a preliminary design and satisfies the applicable acceptance criteria of NUREG-1537, Part 2, Section 9.4, allowing the staff to make the following relevant findings: (1) the facility communication systems are designed to provide two-way communication between all locations essential for safe facility operation, (2) the communication systems allow the operator on duty to communicate with supervisory and health physics personnel, and (3) the communication systems allow a facility-wide announcement of an emergency and have provisions for summoning emergency assistance from designated personnel.

Therefore, the staff finds that the preliminary design of the SHINE communications systems, as described in SHINE PSAR Section 9a2.4, is sufficient and meets the applicable regulatory requirements and guidance for the issuance of a construction permit in accordance with 10 CFR 50.35. Further technical or design information required to complete the safety analysis may reasonably be left for later consideration. The staff will confirm that the final design conforms to this design basis during the evaluation of SHINE's FSAR.

9a.4.5 Possession and Use of Byproduct, Source, and Special Nuclear Material

The staff evaluated the sufficiency of the preliminary design of SHINE's program for possession and use of byproduct, source, and special nuclear material in the IF, as described in SHINE PSAR Section 9a2.5, in part, by reviewing how byproduct materials, source material, and SNM are generated and processed, using the guidance and acceptance criteria from Section 9.5, "Possession and Use of Byproduct, Source, and Special Nuclear Material," of NUREG-1537, Parts 1 and 2.

Consistent with the review procedures of NUREG-1537, Part 2, Section 9.5, the staff evaluated the design bases; system description; operational analysis and safety function; and required technical specifications and their bases, including testing and surveillance.

On the basis of its review, the staff has determined that the facility design with respect to the byproduct, source, and SNM used in the IF demonstrates an adequate design basis for a preliminary design and satisfies the applicable acceptance criteria of NUREG-1537, Part 2, Section 9.5, allowing the staff to make the following relevant findings:

(1) The auxiliary facilities and systems are designed for the possession and use of byproduct materials produced by the facility. The design bases include limits on potential personnel exposures that are in compliance with 10 CFR Part 20 and are consistent with the facility ALARA program.

(2) The applicant has described the authorized spaces for use of the material and, to ensure that radiation exposures are acceptably limited, the design features specify upper limits on source strengths of radionuclides authorized for possession or use in the facility under the 10 CFR Part 50 license.

(3) Design features provide reasonable assurance that uncontrolled release of radioactive material to the unrestricted environment will not occur.

Therefore, the staff finds that the preliminary design of the SHINE program for the possession and use of byproduct, source, and SNM in the IF, as described in SHINE PSAR Section 9a2.5, is sufficient and meets the applicable regulatory requirements and guidance for the issuance of a construction permit in accordance with 10 CFR 50.35. Further technical or design information required to complete the safety analysis may reasonably be left for later consideration. The staff will confirm that the final design conforms to this design basis during the evaluation of SHINE's FSAR.

9a.4.6 Cover Gas Control in Closed Primary Coolant Systems

The staff evaluated the sufficiency of SHINE's description of cover gas control in the primary coolant systems as presented in SHINE PSAR Section 9a2.6, "Cover Gas Control in Closed Primary Coolant Systems," using the guidance and acceptance criteria from Section 1.6, "Cover Gas Control in Closed Primary Coolant Systems," of NUREG-1537, Parts 1 and 2.

As stated in SHINE PSAR Section 1.8, "The PCLS is a closed loop cooling system that provides cooling to the TSV. Details for the cover gas control in the PCLS cooling water tank (1-PCLS-01T) will be provided in the FSAR."

The staff finds that information on SHINE PSAR Section 9a2.6 pertains to the operations of the SHINE facility, and specific details are not necessary for the issuance of a construction permit. Therefore, the staff has deferred a more detailed evaluation of this section until the receipt of an FSAR supporting an operating license application.

9a.4.7 Other Auxiliary Systems

As described in Section 9.a2.7 of SHINE's PSAR, the Tritium Purification System (TPS) is the only other auxiliary system in the IF. The staff evaluated the sufficiency of the preliminary design of SHINE's TPS, as described in SHINE PSAR Section 9a2.7, in part, by reviewing the TPS process, and off-normal and accident scenarios, using the guidance and acceptance criteria from Section 9.7, "Other Auxiliary Systems," of NUREG-1537, Parts 1 and 2.

Consistent with the review procedures of NUREG-1537, Part 2, Section 9.7, the staff compared the design and functional descriptions of TPS with the design bases. In addition, the staff reviewed the discussion and analyses of the functions and potential malfunctions with respect to safe facility operation and shutdown, the effect on facility safety systems, and the potential for TPS to initiate or affect the uncontrolled release of radioactive material.

The applicant performed an analysis of the TPS and determined that the system design, function, and potential malfunctions would not result in an uncontrolled release of radioactivity. The TPS was reviewed as part of the development of the ISA for potential as design basis accidents (DBAs) or initiating events (IEs). The guidance in NUREG-1520, "Standard Review Plan for the Review of a License Application for a Fuel Cycle Facility," Revision 1

(Reference 60), and NUREG-1537, Part 1, was used in this evaluation. The results of this evaluation (TPS accident analysis) are discussed in PSAR Chapter 13. The staff evaluation of the TPS accident analysis is provided in SER Chapter 13.

On the basis of its review, the staff has determined that the level of detail provided on SHINE's other auxiliary system demonstrates an adequate design basis for a preliminary design and satisfies the applicable acceptance criteria of NUREG-1537, Part 2, Section 9.7, allowing the staff to make the following relevant findings: (1) the system has been designed to perform the functions required by the design bases, (2) the functions and potential malfunctions, that could affect facility operations or initiate uncontrolled release of radioactive material, have been considered in the design of the system, and (3) the technical specifications and their bases proposed in the PSAR give reasonable assurance that the system will be operable, as required by the design bases.

Therefore, the staff finds that the preliminary design of SHINE auxiliary systems, as described in SHINE PSAR Section 9a2.7, is sufficient and meets the applicable regulatory requirements and guidance for of the issuance of a construction permit in accordance with 10 CFR 50.35. Further technical or design information required to complete the safety analysis may reasonably be left for later consideration. The staff will confirm that the final design conforms to this design basis during the evaluation of SHINE's FSAR.

9a.4.8 Probable Subjects of Technical Specifications

In accordance with 10 CFR 50.34(a)(5), the staff evaluated the sufficiency of the applicant's identification and justification for the selection of those variables, conditions, or other items which are determined to be probable subjects of technical specifications for the SHINE IF auxiliary systems, with special attention given to those items which may significantly influence the final design.

SHINE PSAR Table 14a2-1, "SHINE Facility Proposed Parameters for Technical Specifications," provides potential variables, conditions, or other items that will be the probable subjects of technical specifications. With respect to SHINE IF auxiliary systems, information is provided on: (1) heating, ventilation, and air conditioning systems, (2) fire protection system, and (3) possession and use of byproduct, source, and special nuclear material. Additionally, in PSAR Section 14a2.6, SHINE lists its fire protection program as an administrative control that will be provided in the technical specifications.

In PSAR Section 9a2.4.3, "Technical Specifications," SHINE states that there are no potential variables, conditions, or other items that will be probable subjects of a technical specification associated with the communication systems.

Based on the information provided in PSAR Sections 9a2.4.3 and 14a2.6, as well as Table 14a2-1, the staff finds that the identification and justification of SHINE's PSTS meets the applicable regulatory requirements for of the issuance of a construction permit in accordance with 10 CFR 50.35. A detailed evaluation of technical specifications, including LCOs and surveillance requirements, will be performed during the review of SHINE's operating license application.

9a.5 Summary and Conclusion

The staff evaluated the descriptions and discussions of SHINE's irradiation facility auxiliary systems, as described in SHINE PSAR Section 9a2 and supplemented by the applicant's responses to RAIs, and finds that the preliminary design of SHINE's IF auxiliary systems, including the principal design criteria, design bases, and information relative to materials of construction, general arrangements, provides reasonable assurance that the final design will conform to the design basis and meets all applicable regulatory requirements and acceptance criteria in or referenced in NUREG-1537.

On the basis of these findings, the staff has made the following conclusions for the issuance of a construction permit in accordance with 10 CFR 50.35:

(1) SHINE has described the proposed design of the auxiliary systems, including, but not limited, the principal architectural and engineering criteria for the design, and has identified the major features or components incorporated therein for the protection of the health and safety of the public.

(2) Further technical or design information required to compete the safety analysis of the auxiliary systems may be reasonably left for later consideration in the FSAR.

(3) There is reasonable assurance that, taking into consideration the site criteria contained in 10 CFR Part 100, the proposed facility can be constructed and operated at the proposed location without undue risk to the health and safety of the public.

(4) There is reasonable assurance: (i) that the construction of the SHINE facility will not endanger the health and safety of the public, and (ii) that construction activities can be conducted in compliance with the Commission's regulations.

(5) The issuance of a permit for the construction of the facility would not be inimical to the common defense and security or to the health and safety of the public.

9b <u>Radioisotope Production Facility Auxiliary Systems</u>

SER Section 9b, "Radioisotope Production Facility Auxiliary Systems," provides an evaluation of the preliminary design of SHINE's RPF auxiliary systems as presented in SHINE PSAR Section 9b, "Radioisotope Production Facility Auxiliary Systems."

9b.1 Areas of Review

The staff reviewed SHINE PSAR Section 9b against applicable regulatory requirements using regulatory guidance and standards to assess the sufficiency of the preliminary design and performance of SHINE's radioisotope production facility auxiliary systems. As part of this review, the staff evaluated descriptions and discussions of SHINE's auxiliary systems, with special attention to design and operating characteristics, unusual or novel design features, and principal safety considerations. The preliminary design of SHINE's auxiliary systems was evaluated to ensure the sufficiency of principal design criteria; design bases; and information relative to materials of construction, general arrangement, and approximate dimensions, sufficient to provide reasonable assurance that the final design will conform to the design basis. In addition, the staff reviewed SHINE's identification and justification for the selection of those variables, conditions, or other items which are determined to be probable subjects of technical

specifications for the facility, with special attention given to those items which may significantly influence the final design. The following sections of the SER describe the areas reviewed.

Section 9b.4.1, “Heating, Ventilation, and Air Conditioning Systems,” states that the SHINE facility has one heating, ventilation, and air conditioning system which serve both the IF and the RPF. Therefore, the review and evaluation described in SER Section 9a.4.1 “Heating, Ventilation, and Air Conditioning,” is applicable to both the SHINE IF and RPF.

Section 9b.4.2, “Handling and Storage of Target Solution,” provides an evaluation of SHINE’s program for handling and storage of special nuclear material (SNM) and byproducts within the target solution and within the radioisotope production facility. Within this review area, the staff assessed the equipment, systems, methods, and administrative procedures for receipt of uranium, the systems and methods for movement, physical control, and storage of target solution within the facility, including analyses to prevent criticality.

Section 9b.4.3, “Fire Protection Systems and Programs,” states that the SHINE fire protection systems and programs serve both the IF and the RPF. Therefore, the review and evaluation described in SER Section 9a.4.3 “Fire Protection Systems and Programs,” is applicable to both the SHINE IF and RPF.

Section 9b.4.4, “Communication Systems,” states that the communication system is common to both the IF and the RPF. Therefore, the review and evaluation described in SER Section 9a.4.4 “Communication Systems,” is applicable to both the SHINE IF and RPF.

Section 9b.4.5, “Possession and Use of Byproduct, Source, and Special Nuclear Material,” provides an evaluation of SHINE’s auxiliary systems within the RPF that normally interact with byproduct, source, and SNM. Within this review area, the staff assessed the types and quantities of radionuclides authorized, the rooms, spaces, equipment, and procedures to be used, the general types of uses, such as research and development, processing, or packaging for shipment, the provisions for controlling and disposing of radioactive wastes, including special drains for liquids and chemicals, and air exhaust hoods for airborne materials, the relationship between these auxiliary facility designs and the physical security and emergency plans, and required technical specifications and their bases, including testing and surveillance.

Section 9b.4.6, “Cover Gas Control in Closed Primary Coolant Systems,” provides an evaluation of SHINE’s systems within the RPF that handle radioactive gases from process vessels. Within this area, the staff assessed the design bases, system description, including drawings and specifications of principal components and any special materials, operational analysis and safety function, instrumentation and control requirements not described in SHINE PSAR Chapter 7, “Instrument and Control Systems,” and required technical specifications and their bases, including testing and surveillance.

Section 9b.4.7, “Other Auxiliary Systems,” provides an evaluation of SHINE’s other auxiliary systems in the RPF that are not described in other chapters of SHINE’s PSAR. Within this review area, the staff assessed the molybdenum isotope product packaging system and the radiologically controlled area material handling.

9b.2 Summary of Application

As discussed in SHINE PSAR Section 9b.1, “Heating, Ventilation, and Air Conditioning Systems,” the SHINE facility has one heating, ventilation, and air conditioning system that

serves both the IF and the RPF. Therefore, the summary provided in SER Section 9a.2 is applicable to both the SHINE IF and RPF.

SHINE PSAR Section 9b.2 discusses the handling and storage of the target solution while it is in the RPF. This section includes the target solution lifecycle, dissolution of uranium metal, target solution preparation, shipment and receipt of SNM, target solution preparation and handling equipment, storage of SNM, and criticality control.

As discussed in SHINE PSAR Section 9b.3, “Fire Protection Systems and Programs,” the SHINE facility has one fire protection system and program. Therefore, the summary provided in SER Section 9a.3 is applicable to both the SHINE IF and RPF.

As discussed in SHINE PSAR Section 9b.4, “Communication Systems,” the SHINE facility has a common communication system which serves both the IF and the RPF. Therefore, the summary provided in SER Section 9a.4 is applicable to both the SHINE IF and RPF.

SHINE PSAR Section 9b.5, “Possession and Use of Byproduct, Source, and Special Nuclear Material,” describes the generation of byproduct material by the fission and irradiation of target solution in the TSV and the systems that process byproduct material in the RPF. The eight auxiliary systems that process byproduct material in the RPF are as follows:

- Target Solution Preparation System (TSPS).
- Radioactive Drain System (RDS).
- Aqueous Radioactive Liquid Waste Storage System (RLWS).
- Radioactive Liquid Waste Immobilization System (RLWE).
- Process Vessel Vent System (PVVS).
- Molybdenum Isotope Product Packaging System (MIPS).
- Solid Radioactive Waste Packaging (SRWP).
- Noble Gas Removal System (NGRS).

SHINE PSAR Section 9b.6, “Cover Gas Control in Closed Primary Coolant Systems,” discusses systems that handle radioactive gases from process vessels. These are the PVVS and the NGRS. The PVVS collects and treats the off-gases from process vessels in the SHINE facility. The PVVS collects off-gases from each vented vessel containing a significant quantity of radioactive material in the RPF, and receives noble gases from the NGRS after a period of decay. The PVVS consists of an acid gas scrubber loop and a blower to vent treated gases out of the RCA. The NGRS receives the cover gas from the target solution vessel off gas system (TOGS), which consists of eight separate vessels. This gas is primarily air, with small quantities of krypton, xenon, and iodine radioisotopes. The gases are compressed and stored in one of five noble gas decay tanks for at least 40 days. This allows the short-lived radioisotopes to largely decay. The stored gases can then be vented through the PVVS to the RCA ventilation zone 1 (RVZ1) system for monitored release through the stack.

SHINE PSAR Section 9b.7, “Other Auxiliary Systems,” describes the auxiliary systems in the RPF not captured in other chapters of the PSAR. These include the MIPS Packaging System (MIPS) and the Radiologically Control Area Material Handling (RMHS). The MIPS receives the purified Mo-99 (now called the “Mo-99 product”) from the molybdenum extraction and purification system (MEPS). Once the Mo-99 product is in the MIPS shielded supercells, it undergoes assay and quality control procedures. The final Mo-99 product is then placed in a Mo-99 product shipping container. The RMHS includes overhead cranes, fork trucks, hand

trucks, carts, and master-slave manipulators that are used to move or manipulate radioactive material within the RCA.

9b.3 Regulatory Basis and Acceptance Criteria

The regulatory basis and acceptance criteria provided in SER Section 9a.3, “Regulatory Basis and Acceptance Criteria,” applies to the auxiliary systems in both the IF and RPF.

9b.4 Review Procedures, Technical Evaluation, and Evaluation Findings

The staff performed an evaluation of the technical information presented in SHINE PSAR Section 9b, as supplemented by the applicant’s responses to RAIs, to assess the sufficiency of the preliminary design and performance of SHINE’s auxiliary systems in the RPF for the issuance of a construction permit, in accordance with 10 CFR 50.35(a). The sufficiency of the preliminary design and performance of SHINE’s auxiliary systems is demonstrated by ensuring the applicable regulatory requirements, guidance, and acceptance criteria, as discussed in Section 9a.3, “Regulatory Basis and Acceptance Criteria,” of this SER are met. The results of this technical evaluation are summarized in SER Section 9b.5, “Summary and Conclusion.”

For the purposes of issuing a construction permit, the preliminary design of the SHINE auxiliary systems may be adequately described at a functional or conceptual level. The staff evaluated the sufficiency of the preliminary design of the SHINE auxiliary systems based on the applicant’s design methodology and ability to provide reasonable assurance that the final design will conform to the design bases with adequate margin for safety. As such, the staff’s evaluation of the preliminary design of SHINE’s auxiliary systems does not constitute approval of the safety of any design feature or specification. Such approval will be made following the evaluation of the final design of SHINE’s auxiliary systems, as described in the FSAR, as part of SHINE’s operating license application.

9b.4.1 Heating, Ventilation, and Air Conditioning Systems

As stated before, the review and evaluation described in SER Section 9a.4.1 “Heating, Ventilation, and Air Conditioning,” is applicable to both the SHINE IF and RPF.

9b.4.2 Handling and Storage of Target Solution

The staff evaluated the sufficiency of the preliminary design of SHINE’s handling and storage of the target solution, as described in SHINE PSAR Section 9b.2, by reviewing the preparation, storage and handling of the target solution, the equipment used for loading/unloading the TSV with target solution, systems, components, and methods for radiation shielding and for protecting irradiated target solution from damage during removal from the IF, movement within the RPF, and the storage of SNM, using the guidance and acceptance criteria from Section 9.2, “Handling and Storage of Reactor Fuel,” of NUREG-1537, Parts 1 and 2.

Consistent with the review procedures of NUREG-1537, Part 2, Section 9.2, the staff evaluated the systems and methods used to handle and store new and irradiated target solution, compared the design bases in this and other chapters of the PSAR (such as Chapters 4, 6, 11, and 13) to the requirements of 10 CFR 50.34(a) and 10 CFR Part 20, and focused on the design features that control radiation and prevent criticality.

On the basis of its review, the staff has determined that the level of detail provided on SHINE's handling and storage of the target solution within the RPF demonstrates an adequate design basis for a preliminary design and satisfies the applicable acceptance criteria of NUREG-1537, Part 2, Section 9.2, allowing the staff to make the following relevant findings:

(1) As discussed in Section 6b.3 of this SER, the staff has determined that the design of systems, components, and methods for handling, moving, and storing target solution outside the IF will provide reasonable assurance that under normal and credible abnormal conditions, all nuclear processes will be subcritical, including use of an NRC-approved margin of sub-criticality for safety.

(2) The systems, components, and methods for handling, moving, and storing target solution, including insertion and removal from the IF, are designed to prevent damage to the target solution.

(3) The design of systems, components, and methods for handling, moving, and storing target solution demonstrate that the facility staff and the public are protected from radiation and that radiation exposures do not exceed the requirements of 10 CFR Part 20 and are consistent with the facility ALARA program.

Therefore, the staff finds that the preliminary design of the SHINE handling and storage of the target solution in the RPF, as described in SHINE PSAR Section 9b.2, is sufficient and meets the applicable regulatory requirements and guidance for of the issuance of a construction permit in accordance with 10 CFR 50.35 and 50.40. Further technical or design information required to complete the safety analysis may reasonably be left for later consideration. The staff will confirm that the final design conforms to this design basis during the evaluation of SHINE's FSAR and that technical specifications will contain limitations on storage conditions necessary to ensure sub-criticality and to administratively and physically control the target solution.

9b.4.3 Fire Protection Systems and Programs

As stated before, the review and evaluation described in SER Section 9a.4.3 "Fire Protection Systems and Programs," is applicable to both the SHINE IF and RPF.

9b.4.4 Communication Systems

As stated before, the review and evaluation described in SER Section 9a.4.4 "Communication Systems," is applicable to both the SHINE IF and RPF.

9b.4.5 Possession and Use of Byproduct, Source, and Special Nuclear Material

The staff evaluated the sufficiency of the preliminary design of SHINE's program for possession and use of byproduct, source, and special nuclear material in the RPF, as described in SHINE PSAR Section 9b.5, by reviewing how byproduct materials, source material, and SNM are generated and processed; the types and quantities of radionuclides authorized; the rooms, spaces, equipment, and procedures to be used; the general types of uses, such as research and development, processing, or packaging for shipment; the provisions for controlling and disposing of radioactive wastes, including special drains for liquids and chemicals, and air exhaust hoods for airborne materials; the relationship between these auxiliary facility designs and the physical security and emergency plans, required technical specifications and their bases, including testing and surveillance, using the guidance and acceptance criteria from

Section 9.5, “Possession and Use of Byproduct, Source, and Special Nuclear Material,” of NUREG-1537, Parts 1 and 2.

Consistent with the review procedures of NUREG-1537, Part 2, Section 9.5, the staff evaluated the design bases, system description, operational analysis and safety function, and required technical specifications and their bases, including testing and surveillance.

- The staff compared the design bases for the auxiliary systems that process byproduct material in the RPF with the commitments developed in other chapters of SHINE PSAR, especially Chapters 11, “Radiation Protection and Waste Management,” and 12, “Conduct of Operations,” and evaluated agreement with the acceptance criteria of NUREG-1537, Part 2, Section 9.5..

On the basis of its review, the staff has determined that the facility design with respect to the byproduct, source, and SNM that will be used in the RPF demonstrates an adequate design basis for a preliminary design and satisfies the applicable acceptance criteria of NUREG-1537, Part 2, Section 9.5, allowing the staff to make the following relevant findings:

(1) The auxiliary facilities and systems are designed for the possession and use of byproduct materials produced by the facility. The design bases include limits on potential personnel exposures that are in compliance with 10 CFR Part 20 and are consistent with the facility ALARA program.

(2) The design features provide reasonable assurance that uncontrolled release of radioactive material to the unrestricted environment will not occur.

Therefore, the staff finds that the preliminary design of the SHINE program for the possession and use of byproduct, source, and SNM in the RPF, as described in SHINE PSAR Section 9b.5, is sufficient and meets the applicable regulatory requirements and guidance for the issuance of a construction permit in accordance with 10 CFR 50.35. Further technical or design information required to complete the safety analysis may reasonably be left for later consideration. The staff will confirm that the final design conforms to this design basis during the evaluation of SHINE’s FSAR.

9b.4.6 Cover Gas Control in Closed Primary Coolant Systems

SHINE PSAR Section 9b.6, “Cover Gas in Closed Primary Coolant Systems,” states that there are no primary coolant systems in the RPF and thus, this section of the PSAR discusses systems that handle radioactive gases from process vessels. These systems are the Process Vessel Vent System (PVVS) and the Noble Gas Removal System (NGRS). The PVVS collects and treats the off-gases from process vessels in the SHINE facility. The PVVS also collects off-gases from each vented vessel containing a significant quantity of radioactive material in the RPF, and receives noble gases from the NGRS after a period of decay. The NGRS receives the cover gas from the target solution vessel off gas system (TOGS). The staff evaluated the sufficiency of the preliminary design of SHINE’s cover gas control systems as described in SHINE PSAR Section 9b.6, by reviewing the (PVVS) and the NGRS, using the guidance and acceptance criteria from Section 9.6, “Cover Gas Control in Closed Primary Coolant Systems,” of NUREG-1537, Parts 1 and 2.

Consistent with the review procedures of NUREG-1537, Part 2, Section 9.6, the staff evaluated the cover gas control systems to ensure that:

- The design and functional description conforms to the design bases.
- The design, functions, and potential malfunctions of NGRS should not cause accidents to the facility or uncontrolled release of radioactivity.
- In the event radioactive material is released by the operation of NGRS, potential radiation exposures should not exceed the limits of 10 CFR Part 20 and should be consistent with the facility ALARA program.

On the basis of its review, the staff has determined that the level of detail provided on SHINE's cover gas control systems satisfies the applicable acceptance criteria of NUREG-1537, Part 2, Section 9.6, allowing the staff to make the following relevant findings:

(1) The PVVS and NGRS are designed to capture and treat the expected off-gases at their anticipated concentrations of constituents under normal and accident conditions, and that the design-basis pressures can be maintained.

(2) Processing, storing, and recombining of radiolytic gases, as well as safe disposal of spent scrubber solutions, HEPA filters, and charcoal filters, have been incorporated into the design to ensure the safety of the facility and personnel.

(3) The PVVS and NGRS have been designed to perform the functions required by the design bases.

(4) Functions and potential malfunctions that could affect facility operations have been considered in the design of the system. No analyzed functions or malfunctions could initiate a facility accident, prevent safe facility shutdown, or initiate uncontrolled release of radioactive material.

Therefore, the staff finds that the preliminary design of the SHINE cover gas control system as described in SHINE PSAR Section 9b.6, is sufficient and meets the applicable regulatory requirements and guidance for the issuance of a construction permit in accordance with 10 CFR 50.35 and 50.40. Further technical or design information required to complete the safety analysis may reasonably be left for later consideration. The staff will confirm that the final design conforms to this design basis during the evaluation of SHINE's FSAR and that technical specifications will contain limitations on storage conditions necessary to ensure sub-criticality and to administratively and physically control the target solution.

9b.4.7 Other Auxiliary Systems

The staff evaluated the sufficiency of the preliminary design of SHINE's other auxiliary systems in the RPF, as described in SHINE PSAR Section 9b.7, by reviewing the following systems,

using the guidance and acceptance criteria from Section 9.7, “Other Auxiliary Systems,” of NUREG-1537, Parts 1 and 2:

- Molybdenum Isotope Product Packaging System (MIPS).
- RCA Material Handling System (RMHS).
- Radioactive Liquid Waste Evaporation and Immobilization System (RWLE).
- Aqueous Radioactive Liquid Waste Storage System (RLWS).
- Solid Radioactive Waste Packaging System (SWRP).
- Radioactive Drain System (RDS).
- Material Handling System (MHS).
- Facility Potable Water System (FPWS).
- Facility Instrument Air System (FIAS).
- Facility Compressed Air System (FCAS).
- Facility Breathing Air System (FBAS).
- Facility Inert Gas System (FIGS).
- Facility Roof Drain Systems (FRDS).
- Facility Sanitary Drains System (FSDS).
- Facility Acid Reagent Storage and Distribution System (FARS).
- Facility Alkaline Reagent Storage and Distribution System (FSRS).
- Facility Organic Reagent Storage and Distribution System (FORS).
- Organic Liquid Waste Storage and Export (OLWS).
- Off-Normal and Accident Scenarios.

Consistent with the review procedures of NUREG-1537, Part 2, Section 9.7, the staff compared the design and functional descriptions of other auxiliary systems with their design bases. In addition, the staff reviewed the discussion and analyses of the functions and potential malfunctions with respect to safe facility operation and shutdown, the effect on facility safety systems, and the potential for these auxiliary systems to initiate or affect the uncontrolled release of radioactive material.

As part of its evaluation, the staff issued RAIs to the applicant. The RAIs and the applicant’s responses are summarized below.

Due to the size and weight of the shields and equipment that need to be moved, and the inventory of tritium and uranium onsite, in RAI 9b.7-1 (Reference 14), the staff requested that the applicant provide additional assessments demonstrating the implementation of the requirements of ASME B30.2 and CMAA 70 to ensure that dropped, toppled, rolled or otherwise off-normal load events do not result in the loss of safety function or the release of radioactivity to the public. The applicant responded (Reference 21) that the guidance provided in NUREG-0612, “Control of Heavy Loads at Nuclear Power Plants: Resolution of Generic Technical Activity A-36” (Reference 78), would be utilized and that a heavy load will be defined as a load that, if dropped, may cause radiological consequences that challenge 10 CFR Part 20 limits. In addition, the applicant stated that the heavy load limit, and the associated load drop analysis, will be determined during detailed design and provided in the FSAR. The staff finds that SHINE’s commitment to following the guidance in NUREG-0612 in final design is acceptable and will confirm that the final design conforms to this design basis during the evaluation of SHINE’s FSAR.

With respect to the consequences that may result from inadvertent criticality during materials handling, in RAI 9b.7-2 (Reference 14), the staff requested that the applicant provide additional

details on how the equipment will be designed to prevent inadvertent criticality and provide an assessment of why technical specifications are not needed or describe preliminary plans for technical specification safety limits and surveillance requirements. The applicant responded (Reference 21) that safety evaluations will be performed for systems that handle fissile material within the facility. In addition, the design for these systems will comply with the requirements for criticality safety detailed in ANSI/ANS-8.7-1998 (Reference 64) and the PSAR. The applicant further stated that administrative controls and maintenance will be applied to these systems to ensure reliability and availability. In addition, the applicant stated that in the FSAR, safety limits that are applicable for material handling activities will be included in the Technical Specifications (TS) and Surveillance Requirements (SR) will be developed to ensure criticality control is maintained during material handling activities.

On the basis of its review, the staff has determined that the level of detail provided on SHINE's other auxiliary system demonstrates an adequate design basis for a preliminary design and satisfies the applicable acceptance criteria of NUREG-1537, Part 2, Section 9.7, allowing the staff to make the following relevant findings: (1) the system has been designed to perform the functions required by the design bases, (2) the functions and potential malfunctions, that could affect facility operations or initiate uncontrolled release of radioactive material, have been considered in the design of the system, and (3) the technical specifications and their bases proposed in the PSAR give reasonable assurance that the system will be operable, as required by the design bases.

Therefore, the staff finds that the preliminary design of SHINE auxiliary systems, as described in SHINE PSAR Section 9b.7, is sufficient and meets the applicable regulatory requirements and guidance for the issuance of a construction permit in accordance with 10 CFR 50.35. Further technical or design information required to complete the safety analysis may reasonably be left for later consideration. The staff will confirm that the final design conforms to this design basis during the evaluation of SHINE's FSAR.

9b.4.8 Probable Subjects of Technical Specifications

In accordance with 10 CFR 50.34(a)(5), the staff evaluated the sufficiency of the applicant's identification and justification for the selection of those variables, conditions, or other items which are determined to be probable subjects of technical specifications for the SHINE RPF auxiliary systems, with special attention given to those items which may significantly influence the final design. The evaluation of the technical specifications is provided in SER Chapter 14.

SHINE PSAR Table 14a2-1, "SHINE Facility Proposed Parameters for Technical Specifications," provides potential variables, conditions, or other items that will be the probable subjects of technical specifications. With respect to SHINE RPF auxiliary systems, information is provided on (1) heating, ventilation, and air conditioning systems, and (2) possession and use of byproduct, source, and special nuclear material, and (3) the noble gas removal system.

In PSAR Section 9b.7, "Other Auxiliary Systems," SHINE states that there are no potential variables, conditions, or other items that will be probable subjects of a technical specification associated with the communication systems.

Based on the information provided in PSAR Section 9b.7, as well as Table 14a2-1, the staff finds that the identification and justification of SHINE's PSTS meets the applicable regulatory requirements for of the issuance of a construction permit in accordance with 10 CFR 50.35. A

detailed evaluation of technical specifications, including LCOs and surveillance requirements, will be performed during the review of SHINE's operating license application.

9b.5 Summary and Conclusions

The staff evaluated the descriptions and discussions of SHINE's radioisotope production facility auxiliary systems, as described in SHINE PSAR Section 9b and supplemented by the applicant's responses to RAIs, and finds that the preliminary design of SHINE's RPF auxiliary systems, including the principal design criteria, design bases, and information relative to materials of construction, general arrangements, provides reasonable assurance that the final design will conform to the design basis and meets all applicable regulatory requirements and acceptance criteria in or referenced in NUREG-1537.

On the basis of these findings, the staff has made the following conclusions for the issuance of a construction permit in accordance with 10 CFR 50.35 and 50.40:

(1) SHINE has described the proposed design of the auxiliary systems, including, but not limited, the principal architectural and engineering criteria for the design, and has identified the major features or components incorporated therein for the protection of the health and safety of the public.

(2) Further technical or design information required to compete the safety analysis of the auxiliary systems may be reasonably left for later consideration in the FSAR.

(3) There is reasonable assurance that, taking into consideration the site criteria contained in 10 CFR Part 100, the proposed facility can be constructed and operated at the proposed location without undue risk to the health and safety of the public.

(4) There is reasonable assurance: (i) that the construction of the SHINE facility will not endanger the health and safety of the public, and (ii) that construction activities can be conducted in compliance with the Commission's regulations.

(5) The issuance of a permit for the construction of the facility would not be inimical to the common defense and security or to the health and safety of the public.

10.0 EXPERIMENTAL FACILITIES

SHINE Medical Technologies, Inc. (SHINE or the applicant) Preliminary Safety Analysis Report (PSAR) Chapter 10, "Experimental Facilities," states that the SHINE facility "does not contain experimental facilities as described in NUREG-1537 and the Final Interim Staff Guidance Augmenting NUREG-1537."

The staff evaluated the descriptions and discussions of the SHINE facility in the PSAR and finds that the preliminary design of the SHINE facility does not contain experimental facilities. The staff concluded that an evaluation of the guidelines of ISG Augmenting NUREG-1537, Part 2 and NUREG-1537, Part 2 is not required because:

(1) SHINE proposes to produce medical radioisotopes and has not described experimental, educational, or other service uses for its facility.

(2) There are no experimental facilities penetrating, located near, or that are an integral part of the irradiation units or radioisotope production facility, as described in the SHINE PSAR.

11.0 RADIATION PROTECTION PROGRAM AND WASTE MANAGEMENT

The purposes of the radiation protection program and waste management provisions are to ensure safety of the SHINE Medical Technologies, Inc. (SHINE or the applicant) irradiation facility (IF) and radioisotope production facility (RPF) and protection of the public. The radiation protection program and waste management provisions, identified by the analyses in the SHINE Preliminary Safety Analysis Report (PSAR), should be conducted using the appropriate methods and engineering design criteria.

This chapter of the SHINE construction permit safety evaluation report (SER) describes the review and evaluation of the U.S. Nuclear Regulatory Commission (NRC) staff (the staff) of the preliminary design of the SHINE radiation protection program and waste management provisions as presented in Chapter 11, "Radiation Protection Program and Waste Management," of the SHINE PSAR, as supplemented by the applicant's response to requests for additional information (RAIs).

11.1 Areas of Review

SHINE PSAR Chapter 11, "Radiation Protection Program and Waste Management," identifies the aspects of the radiation protection program and waste management provisions considered to ensure facility safety and protection of the public. SHINE PSAR Chapter 11 is applicable to both the SHINE IF and RPF.

The staff reviewed PSAR Chapter 11 against applicable regulatory requirements using regulatory guidance and standards to assess the sufficiency of the preliminary design criteria of the SHINE facility radiation protection program and waste management provisions. As part of this review, the staff evaluated descriptions and discussions of the SHINE facility radiation protection program and waste management provisions, with special attention to design and operating characteristics, unusual or novel design features, and principal safety considerations. The preliminary design of the SHINE facility radiation protection program and waste management provisions were evaluated to ensure the design criteria, design bases, and information relative to construction is sufficient to provide reasonable assurance that the final design will conform to the design basis. In addition, the staff reviewed SHINE's identification and justification for the selection of those variables, conditions, or other items which are determined to be probable subjects of technical specifications for the facility, with special attention given to those items which may significantly influence the final design.

Areas of review for this section included both the SHINE IF and RPF program. Within these review areas, the staff assessed the following:

- The capability of the program to identify and discuss all expected radiation and radioactive sources, to include airborne, liquid, solid sources, and radioactive wastes.

- The design and effectiveness of the radiation protection program required by 10 CFR 20.1101.

- The ability to maintain worker and public doses and radiological releases through an as low as is reasonably achievable (ALARA) program, including: (1) a description of the

methods to establish, change, and manage policy for the ALARA program; and (2) a description of how the ALARA program is implemented for all activities at the facility to maintain radiation doses of all personnel and releases of effluents to the unrestricted area ALARA.

- The procedures and equipment at the facility for routinely monitoring and sampling workplaces and other accessible locations to identify and control potential sources of radiation exposure and releases of radioactive materials.

- The design bases for the equipment and procedures utilized for controlling radiation exposures to personnel and releases of radioactive materials from the facility.

- The capability of the dosimetry and other methods to effectively assess exposure to radiation and radioactive materials.

- The capability of the program for contamination control to meet all applicable requirements of the regulations and the facility ALARA program.

- The capability of the environmental monitoring program to: (1) comply with any commitments made by the applicant; (2) establish preoperational baselines used to ascertain natural background so that the radiological impact of facility operation on the environment can be determined; (3) promote compliance with environmental quality requirements through the facility policy and, procedures; (4) ensure that the written plans and the bases of procedures for implementing the environmental monitoring programs, including changes, are reviewed for adequacy and approved by authorized personnel; and (5) establish the environmental surveillance program, including information on the, selection of sampling and other program parameters.

- The capability to manage radioactive wastes to include: (1) philosophy of and approach to management of the wastes; (2) organization of the management function; (3) program staffing and position descriptions, and program personnel responsibilities and qualifications as discussed in the format and content guide; (4) any review and audit committees related to radioactive waste management; (5) training for staff; (6) plans for shipping, disposal, and long-term storage; (7) program documentation and records, including availability and retention; (8) audits of the effectiveness of the program; (9) bases of procedures; and (10) bases of technical specifications.

- The effectiveness of the radioactive waste control plans at the facility to include methods to decrease and eventually minimize the formation of radioactive wastes.

- The methods of characterizing the possible effluents, references to the applicable regulations that establish limits for release, descriptions of the identities and amounts of radionuclides in the effluents, the release points, and the characteristics of the environment to which they are released.

11.2 Summary of Application

As stated above and described in SHINE PSAR Chapter 11, the radiation protection program and waste management provisions are established to ensure facility safety and protection of the public.

PSAR Section 11.1.1.1, “Airborne Radioactive Sources,” notes that gaseous activity from the TSV will be handled by the Tritium Purification System (TPS) and the TSV Off Gas System (TOGS). The noble gas removal system (NGRS) and the process vessel vent system (PVVS), which are located in the RPF, will also be used to contain and control airborne activity in the facility. All gas treatment systems either exhaust to another treatment system or to the radiologically controlled area ventilation system exhaust. In addition to the major airborne activity source term within the irradiation units (IUs), an estimated 15 Curies (Ci) of Ar-41 (T½ = 1.8 hours) is also produced. To ensure containment of these airborne radioactive materials, the heating, ventilation, and air conditioning (HVAC) systems described in PSAR Chapter 9a2.1, consist of three stages (designated RVZ1, RVZ2, and RVZ3) to remove airborne activity from areas of the facility having the lowest concentration (RVZ3) and cycle it to the increasingly higher concentration areas (RVZ2 and RVZ1, respectively). Exhaust air from these zones will be pulled through high-efficiency particulate air (HEPA) filters and carbon adsorbers to minimize the potential for airborne contamination. In addition the above-mentioned sources of airborne activity, N-16 (T½ = 7.1 seconds) is produced through neutron activation of natural nitrogen in the primary coolant loops. The N-16 is contained within the coolant loops; however, its decay, accompanied by 6.1 and 7.1 MeV gamma rays, requires shielding design consideration for worker safety. Gaseous activity released from the TSV and process operations will be collected and sent to the NGRS, which consists primarily of five 100-gallon decay tanks and is located in a shielded cell. The gases will be held for 40 days post-irradiation to allow short lived fission and activation products to decay to levels that meet regulatory limits for release to the environment. The estimated annual dose from airborne effluent releases is below 10 mrem. The processes will be remotely controlled, manually controlled, or performed with telemanipulators, with minimal automated sequences. Radiation monitors and alarms will be used to monitor for release of radiological materials and ambient exposure rates. Gases and liquids that contain potentially-radiological material will be transferred through shielded pipe chases to limit the exposure of individuals to radiation.

PSAR Section 11.1.1.2, “Liquid Radioactive Sources,” states with the exception of two sources (N-16 production and fresh, unirradiated uranyl sulfate solution) all liquid wastes are associated with irradiated uranyl sulfate as a target solution. The values in Table 11.1-5 related to IF operation show estimated activity of fission products to be present in the subcritical assembly system (consisting of the TSV, neutron multiplier, and support structure). Slightly lower activities are estimated in the Uranyl Nitrate conversion system (UNCS) that will be handled in the RPF portion of the SHINE facility with other sources being either lower in activity or were not estimated pending completion of the final safety analysis report (FSAR). This contains the majority of byproduct material within the facility; specifically, the fission products generated in the TSV. Each of the two waste storage tanks can hold a maximum of 21 TSV batches of raffinate. The PSAR states that certain details, such as concentrations and solubilities of major liquid sources, will be provided in the FSAR. The PSAR also states that there will be no radioactive liquid discharges to the environment from the SHINE facility.

PSAR Section 11.1.1.3, “Solid Radioactive Sources,” identifies several categories of solid radioactive sources expected during operations. On the low end of this activity spectrum is enriched uranium feed material. It is converted from a metallic form to an oxide and then to

uranyl sulfate where it enters the irradiation process. The other end of the activity spectrum includes spent extraction columns, spent filters, solidified liquid waste and irradiated components. Licensed radioactive waste disposal sites that can take receipt and dispose of solid radioactive waste are identified in Table 11.2-1 of the PSAR.

PSAR Section 11.1.2, "Radiation Protection Program," addresses the following radiation protection program elements: responsibilities of key program personnel; staffing of the radiation protection program; radiation protection program independence; radiation safety committee; written radiation protection procedures; radiation protection training; and radiation safety audits. SHINE stated that the radiation protection program responsibility will be vested in the Radiation Protection Manager (RPM) and that this individual will report to the Environment, Safety, and Health Manager who reports to the Chief Operating Officer (COO). A separate reporting chain to the COO is provided for the Plant Manager and his subordinates. This assures separation of the radiation safety function from the facility operating component(s), thereby facilitating independent radiation safety decisions. This section of the PSAR further stated that in the context of written radiation protection procedures, radiation work permits will be developed consistent with Regulatory Guide 8.10 whenever the RPM considers them necessary or for any activities involving licensed materials not covered by operating procedures and where radioactivity levels are likely to exceed airborne activity limits. PSAR 11.1.2 also stated that radiation protection training will be developed consistent with Regulatory Guides 8.10, 8.13, and 8.29, as well as ASTM E1168-95, "Radiological Protection Training for Nuclear Facility Workers." SHINE committed to conduct audits of the radiation protection program at least annually.

PSAR Section 11.1.3, "ALARA Program," states the radiation protection manager (RPM) is responsible for implementing the ALARA program and ensuring that adequate resources are committed to make the program effective. The RPM will prepare an annual ALARA program evaluation report that will review: trends in radiation exposures and effluent release data; the results of audits and inspections; the use, maintenance, and surveillance of equipment used for exposure and effluent control; and other issues that may influence program effectiveness. The program will facilitate interactions between radiation protection and operations personnel, particularly through use of the Radiation Safety Committee, where both organizations are represented. The applicant committed to the ALARA as applied to plant design, where designs are reviewed, updated, and modified as experience is gained. Specifically included in these reviews will be shielding, ventilation, and monitoring instrument designs as they relate to traffic control, security, access control, and health physics. Additionally, the location of equipment and routing of piping containing radioactive fluids is reviewed as part of the design effort to ensure that significant sources are adequately shielded and properly routed to minimize exposure of personnel. SHINE has indicated that lessons-learned from industry practices and operating experience shared by the NRC in the form of generic communications are incorporated into the facility design. The design considerations noted in PSAR Section 11.1.3 emphasize remote handling capabilities, use of high reliability of components as a means of reducing maintenance requirements, and reducing component access and removal times to reduce radiation exposure. Specific examples cited by SHINE that assist in maintaining exposures ALARA include:

- Design provisions for maintenance of target solution and light water pool chemistry conditions, such that corrosion and resulting activation product source terms are minimized.

- Features to allow draining, flushing, and decontaminating equipment and piping.

- Design of equipment to minimize the creation and buildup of radioactive material and to ease flushing of crud traps.
- Shielding for personnel protection during maintenance or repairs and during decommissioning.
- Means and adequate space for the use of movable shielding.
- Separation of more highly radioactive equipment from less radioactive equipment and separate shielded compartments for adjacent items of radioactive equipment.
- Shielded access hatches for installation and removal of plant components.
- Design features, such as the means to provide surface decontamination within hot cells.
- Means and adequate space for the use of remote operations, maintenance, and inspection equipment.
- Separating clean areas from potentially contaminated ones.
- Locating equipment, instruments, and sampling stations that require routine maintenance, calibration, operation, or inspection, to promote ease of access and minimize occupancy time in radiation areas.
- Laying out plant areas to allow remote or mechanical operation, service, monitoring, or inspection of contaminated equipment.
- Providing, where practicable, for movement of equipment or components requiring service to a lower radiation area.

PSAR Section 11.1.4, “Radiation Monitoring and Surveying,” discusses the applicant’s plan to use continuous air monitors (CAMs) to provide indications of airborne activity levels in the RCA. The CAMs will be supplemented, when needed, by a portable air sampler followed by laboratory analysis. Tritium sampling will be conducted in each IU, the TPS glovebox room, and from stack effluent. Continuous monitoring of the plant stack releases will be annunciated in the control room. SHINE proposes that the production processes will result in zero liquid releases; however, continuous monitoring of closed loop systems will be performed. Radiation area monitors will be located at unspecified areas and provide indications of exposure rates to the control room. At each control point (entrance/exit to the RCA), SHINE has proposed having one or more of the following available: a portal monitor, a frisker, a hand and foot monitor, and a small article monitor, the latter being used to conduct free-release surveys of tools and similar equipment. Additionally, criticality accident and alarm system (CAAS) monitors (gamma and neutron detectors with local and control room annunciation) will be provided (locations to be included in the FSAR). Also in PSAR Section 11.1.4, the applicant states that radiation surveys will be performed to ascertain radiation levels and concentrations that may be present in the facility and to detect releases of radioactive material from facility equipment and operations.

Specific surveillance program details were not provided in the PSAR. It was noted, however, that survey and monitoring programs will be consistent with the guidance provided in:

- Regulatory Guide 8.2, "Guide for Administrative Practices in Radiation Monitoring" (Reference 80).
- Regulatory Guide 8.7, "Instructions for Recording and Reporting Occupational Radiation Exposure Data" (Reference 81).
- Regulatory Guide 8.9, "Acceptable Concepts, Models, Equations, and Assumptions for a Bioassay Program" (Reference 82).
- Regulatory Guide 8.24, "Health Physics Surveys During Enriched Uranium-235 Processing and Fuel Fabrication" (Reference 83).
- Regulatory Guide 8.34, "Monitoring Criteria and Methods To Calculate Occupational Radiation Doses" (Reference 84).

PSAR Section 11.1.5, "Radiation Exposure Control and Dosimetry," defines a Restricted Area (defined in 10 CFR 20) to primarily include the RCA and also states that most other restricted areas are within the physical structure of the SHINE facility; however, the PSAR notes that radioactive material may be temporarily stored in areas outside of the main facility, such as the waste staging and shipping building. The applicant has also defined a Controlled Area (also defined in 10 CFR Part 20) to include any area beyond the main reception area, but outside of the Restricted Area. The applicant also states that members of the public cannot directly enter the Controlled Area and must be processed by security and given authorization to enter. SHINE has defined an Unrestricted Area for which no access control is exercised and access is not limited in any way. This includes all areas outside of the Controlled Area. SHINE recognized that the dose in an Unrestricted Area from external sources may not exceed 0.02 mSv (2 mrem) in any one hour, and that doses to members of the public may not exceed 100 mrem/year above background consistent with 10 CFR 20.1301. The PSAR includes definitions for a Radiation Area, Airborne Radioactivity Area, and a High Radiation Area as contained in 10 CFR 20. Also defined by SHINE (but not in 10 CFR Part 20) is a Contaminated Area. Such an area is defined by the presence of removable surface contamination of 0.33 Bq/100 cm^2 (20 dpm/100 cm^2) of alpha activity or 16.7 Bq/100 cm^2 (1000 dpm/100 cm^2) of beta activity. Access to the Restricted Area occurs via one of the Control Points where dosimetry and protective clothing and equipment are issued. All personnel entering the Restricted Area must be properly trained, unless they are escorted by someone who has been trained. Within the Restricted Area, a number of High Radiation Areas (HRAs) exist. Access to HRAs will be controlled by a combination of administrative methods and a combination of active and passive barriers.

PSAR Section 11.1.5 also states that any personnel entering the Restricted Area will be required to wear a beta-gamma dosimetry device in a manner consistent with the manufacturer's directions. Devices will be exchanged quarterly. Exposure control includes performing an investigation (and documentation) of any individual exposure greater than 25 percent of the SHINE administrative limits. The RPM is informed of such exposures. PSAR Section 11.1.5 also addresses internal dose assessments. The applicant proposes to use a combination of air concentration measurements, measurements of radionuclides in the body, and radionuclides in excreta to assess internal dose. SHINE will assume that the measured air

concentration is equal to the inhaled concentration, unless respiratory protective equipment is used in accordance with 10 CFR 20.1703 or the intake is determined based on excreta sample measurements or whole body counting. PSAR Section 11.1.5 also discusses additional facilities, including: locker and change rooms for male and female employees to change into clothing suitable for RCA entry; a first aid station to treat injured personnel; a personnel decontamination area, and storage areas for anti-contamination clothing; respiratory protective equipment; and radiation protection supplies.

PSAR Section 11.1.6, “Contamination Control Equipment and Facility Layout General Design Considerations for 10 CFR 20.1406,” addresses design considerations to prevent spread of contamination to the facility and the environment for the following: (1) shielded compartments and hot cells; (2) monitoring and controlled entry/egress to the Restricted Area; (3) piping considerations; (4) a light water pool; and (5) process tanks.

PSAR Section 11.1.7, “Environmental Monitoring,” discusses the applicant’s proposed radiological environmental monitoring program (REMP) that routinely includes direct exposure monitoring, air sampling and groundwater sampling. Provisions are included for sampling of other environmental media (termed biota sampling) when triggered by pre-defined off-normal releases, should they occur. A preoperational REMP will be conducted and include thermoluminescent dosimeters, air, groundwater, and biota in order to establish baseline values, which can be referenced by the operational REMP.

PSAR Section 11.2.1, “Radioactive Waste Management Program,” defines the goals of the waste management program as: minimizing waste generation, minimizing exposure of personnel, and protecting the general public and environment. The applicant discusses the following aspects of the program: (1) responsibilities of management and supervisory positions; (2) operating procedures; (3) record keeping and document controls; and (4) waste management audits.

PSAR Section 11.2.2, “Radioactive Waste Controls,” contains a commitment to describe the operational procedures to be used to identify, characterize, and separately treat the different waste streams in the FSAR. PSAR Section 11.2.2.1 states that a waste minimization program will exist within the radioactive waste management program. PSAR Section 11.2.2.2 presents the preliminary identification of waste streams and the proposed controls.

PSAR Section 11.2.3, “Release of Radioactive Waste,” describes “release” as processing and packaging wastes as required to meet the waste acceptance criteria at an established disposal facility. Processes are utilized to segregate specific radionuclides important to waste classification so to reduce the waste classification of the larger volume of wastes. Several of the solid waste streams are packaged then stored in the waste staging and shipping building to allow decay of the contents to occur, reducing the waste classification, as well as the radiation level of the packages at final disposal. PSAR Section 11.2.3 restates that there are no liquid radioactive effluent discharges from the facility. Liquid wastes are processed by ion exchange to remove specific radionuclides important to waste classification and by evaporation to concentrate the bottoms prior to solidification and disposal. Gaseous wastes from the NGRS are held for a minimum of 40 days of decay, sampled and evaluated against release criteria and - if sufficiently below the limits - released through a monitored stack.

PSAR Section 11.3, “Respiratory Protection Program,” states that a respiratory protection program will be used only when the HVAC or other engineering controls cannot be applied to control the intake of radioactive material. The applicant first made reference to these

engineered controls represented by the HVAC system described in Section 9a2.1 of the PSAR. The respiratory protection program includes the following elements: (1) air sampling; (2) surveys and, when necessary, bioassays; (3) performance testing of respirators for operability; (4) written procedures for all key program elements; and (5) determination by a physician that the individual user is medically fit to use respiratory protection equipment. The applicant also references applicable regulations, industry standards, and provides additional information regarding elements of the proposed respiratory protective equipment fit testing program.

Additionally, the following PSAR tables provide information on the radiation protection program and waste management provisions:

- Tables 11.1-1 through Table 11.1-3 lists the TSV source term parameters, limiting and bounding radionuclide inventories, and activity for select radionuclides following shutdown.
- Table 11.1-4 through Table 11.1-6 lists various airborne, liquid, and solid radioactive sources that are expected to be associated with plant operation, including the IF and RPF components.
- Table 11.1-7 provides administrative radiation exposure limits.
- Table 11.1-8 provides the proposed environmental thermoluminescent dosimeters locations.
- Table 11.1-9 shows the radionuclides being released with Xe-133 comprising more than 94percent of the emissions by activity.
- Table 11.2-1 provides a summary of waste types, the waste classification at the time of generation, and anticipated volume.
- Table 11.2-2 through 11.2-7 provides waste methodology for various components and waste streams.
- Table 4b.4-1 of the PSAR lists estimated special nuclear material (SNM) inventory in the RPF.

11.3 Regulatory Basis and Acceptance Criteria

As previously stated and described in SHINE PSAR Chapter 11, the radiation protection program and waste management provisions are established to ensure facility safety and protection of the public. Therefore, the regulatory basis and acceptance criteria provided below apply to both the IF and RPF.

The staff reviewed SHINE PSAR Chapter 11 against applicable regulatory requirements, using regulatory guidance and standards, to assess the sufficiency of the preliminary design of the SHINE radiation protection program and waste management provisions for the issuance of a construction permit. In accordance with paragraph (a) of Title 10 of the *Code of Federal Regulations* (10 CFR) 50.35, “Issuance of Construction Permits,” a construction permit

authorizing SHINE to proceed with construction may be issued once the following findings have been made:

(1) SHINE has described the proposed design of the facility, including, but not limited to, the principal architectural and engineering criteria for the design, and has identified the major features or components incorporated therein for the protection of the health and safety of the public.

(2) Such further technical or design information as may be required to complete the safety analysis, and which can reasonably be left for later consideration, will be supplied in the final safety analysis report (FSAR).

(3) Safety features or components, if any, which require research and development have been described by SHINE and a research and development program will be conducted that is reasonably designed to resolve any safety questions associated with such features or components.

(4) On the basis of the foregoing, there is reasonable assurance that: (i) such safety questions will be satisfactorily resolved at or before the latest date stated in the application for completion of construction of the proposed facility taking into consideration the site criteria contained in 10 CFR Part 100, and (ii) the proposed facility can be constructed and operated at the proposed location without undue risk to the health and safety of the public.

With respect to the last of these findings, the staff notes that the requirements of 10 CFR Part 100 are specific to nuclear power reactors, and therefore not applicable to the SHINE facility. However, the staff evaluated SHINE's site specific conditions using site criteria similar to 10 CFR Part 100, by using the guidance in NUREG-1537. The staff's review evaluated the geography and demography of the site; nearby industrial, transportation, and military facilities; site meteorology; site hydrology; and site geology, seismology, and geotechnical engineering to ensure that issuance of the construction permit will not be inimical to public health and safety.

The staff's evaluation of the preliminary design of the SHINE radiation protection program and waste management provisions does not constitute approval of the safety of any design feature or specification. Such approval will be made following the evaluation of the final design of the SHINE radiation protection program and waste management provisions as described in the FSAR as part of SHINE's operating license application.

11.3.1 Applicable Regulatory Requirements

The applicable regulatory requirements for the evaluation of the SHINE radiation protection program and waste management provisions are as follows:

- 10 CFR Part 20, "Standards for Protection Against Radiation."
- 10 CFR 50.34, "Contents of applications; technical information," paragraph (a), "Preliminary safety analysis report."
- 10 CFR 50.40, "Common Standards."

11.3.2 Regulatory Guidance and Acceptance Criteria

In applying guidance and acceptance criteria, the staff used its judgment as to which acceptance criteria were relevant to SHINE's proposed facility, as much of this guidance was originally developed for nuclear reactors. Given the similarities in SHINE's proposed facility and non-power research reactors, the staff used established guidance documents and the Commission's regulations to determine the acceptance criteria for demonstrating compliance with 10 CFR regulatory requirements. For example, the staff used:

- NUREG-1537, Part 1, "Guidelines for Preparing and Reviewing Applications for the Licensing of Non-Power Reactors, Format and Content," issued February 1996 (Reference 4).

- NUREG-1537, Part 2, "Guidelines for Preparing and Reviewing Applications for the Licensing of Non-Power Reactors, Standard Review Plan and Acceptance Criteria," issued February 1996 (Reference 5).

- "Final Interim Staff Guidance [ISG] Augmenting NUREG-1537, Part 1, 'Guidelines for Preparing and Reviewing Applications for the Licensing of Non-Power Reactors: Format and Content,' for Licensing Radioisotope Production Facilities and Aqueous Homogeneous Reactors," dated October 17, 2012 (Reference 6).

- "Final Interim Staff Guidance [ISG] Augmenting NUREG-1537, Part 2, 'Guidelines for Preparing and Reviewing Applications for the Licensing of Non-Power Reactors: Standard Review Plan and Acceptance Criteria,' for Licensing Radioisotope Production Facilities and Aqueous Homogeneous Reactors," dated October 17, 2012 (Reference 7).

As stated in the ISG Augmenting NUREG-1537, the staff determined that certain guidance originally developed for heterogeneous non-power research and test reactors is applicable to aqueous homogenous facilities and production facilities. SHINE used this guidance to inform the design of its facility and prepare its PSAR. The staff's use of reactor-based guidance in its evaluation of the SHINE PSAR is consistent with the ISG Augmenting NUREG-1537.

As appropriate, additional guidance (e.g., NRC regulatory guides, Institute of Electrical and Electronics Engineers (IEEE) standards, American National Standards Institute/American Nuclear Society (ANSI/ANS) standards) has been used in the staff's review of SHINE's PSAR. The use of additional guidance is based on the technical judgment of the reviewer, as well as references in NUREG-1537, Parts 1 and 2; the ISG Augmenting NUREG-1537, Parts 1 and 2; and the SHINE PSAR. Additional guidance documents used to evaluate SHINE's PSAR are provided as references in Appendix B of this SER.

11.4 Review Procedures, Technical Evaluation, and Evaluation Findings

As described in SHINE PSAR Chapter 11, the radiation protection program and waste management provisions are established to ensure facility safety and protection of the public. Therefore, the regulatory basis and acceptance criteria provided below applies to both the IF and RPF.

The staff performed an evaluation of the technical information presented in SHINE PSAR Chapter 11, as supplemented by the applicant's responses to RAIs, to assess the sufficiency of

the radiation protection program and waste management provisions for the issuance of a construction permit, in accordance with 10 CFR 50.35(a). Sufficiency of the radiation protection program and waste management provisions is demonstrated by acknowledgement and commitments to applicable regulatory requirements, guidance, and acceptance criteria, as discussed in Section 11.3, "Regulatory Basis and Acceptance Criteria," of this SER. The results of this technical evaluation are summarized in SER Section 11.5, "Summary and Conclusion."

For the purposes of issuing a construction permit, the radiation protection program and waste management provisions may be adequately described at a functional or conceptual level. The staff evaluated the sufficiency of the radiation protection program and waste management provisions based on the applicant's design methodology and ability to provide reasonable assurance that the final design will conform to the design bases with an adequate margin for safety. As such, the staff's evaluation of the preliminary design of the SHINE radiation protection program and waste management provisions does not constitute approval of the safety of any design feature or specification. Such approval will be made following the evaluation of the final design of the SHINE radiation protection program and waste management provisions, as described in the FSAR, as part of SHINE's operating license application.

11.4.1 Radiation Sources

The staff evaluated the information provided on the radiation sources, as described in SHINE PSAR Section 11.1.1, "Radiation Sources," using the guidance and acceptance criteria from Section 11.1.1, "Radiation Sources," of NUREG-1537, Parts 1 and 2.

Consistent with the review procedures of NUREG 1537, Part 2, Section 11.1.1, the staff evaluated the discussion of potential sources of radiation in the facility, as presented in SHINE PSAR Section 11.1.1 and other relevant chapters of the PSAR. The staff compared the description of the types of radioactive materials present with the applicable process description, including radionuclide inventories and mass balances and chemical and physical forms, to verify that all radioactive materials associated with the process have been identified. The staff reviewed the description and discussion of all sources of radiation to verify that they are described in sufficient detail to provide the bases for the design and assessment of personnel protective measures and radiation doses. The staff confirmed that all solid sources of radiation at the facility are described and discussed in sufficient detail to permit evaluation of all significant radiological exposures related to normal operation, utilization, maintenance, and radioactive waste management including processing and shipment.

Although technically it is a part of the Chapter 4 material that describes features of the IU, RAI 4a2.5-1 and its response are discussed in this section because of the impact of shield thickness on occupational radiation exposures.

The ISG Augmenting NUREG-1537, Part 2, Section 4a2.4, "Biological Shield," Acceptance Criteria, states, in part, that "[t]he principal objective of the shield design should be to ensure that the projected radiation dose rates and accumulated doses in occupied areas do not exceed the limits of 10 CFR Part 20, 'Standards for Protection Against Radiation,' and the guidelines of the facility's ALARA (as low as [is] reasonably achievable) program discussed in Chapter 11 of the SAR."

SHINE PSAR, Section 4a2.5.2.2, "Geometry and Configuration," states that the side wall of the IU cell biological shield consists of standard density concrete that is 6.0 feet (1.8 meters) thick and that the dose rates on the external surface of the shield wall is expected to be less than

1.0 millirem/hour. PSAR Section 4a2.5.3.1, “Shielding Calculations,” notes that the Monte-Carlo N-Particle (MCNP) Transport Code was used to determine the required shield thickness. PSAR Section 4a2.5.4, “Analysis,” states, in part, that analysis is performed to: (1) give detailed results of both neutron and gamma-ray dose rates at locations that could be occupied as well as to the unrestricted environment; and (2) include shield penetrations and voids, such as beamports, thermal columns, and irradiation rooms or vaults, as well as the shielding of piping and other components that could contain radioactive materials or allow radiation streaming.

In RAI 4a2.5-1 (Reference 14), the staff asked the applicant to provide a list of the components inside the irradiation unit cell that are considered significant contributors (and the magnitude of these contributions) to the gamma and neutron flux and dose rates impinging on the interior shield wall. For each component, the applicant was requested to describe the key assumptions included in the MCNP (or other computer code) radiation transport modeling used to determine shield wall thickness.

In response to RAI 4a2.5-1 (Reference 21), the applicant stated the components inside the IU cell that are considered to be significant contributors to the gamma and neutron fluxes are the neutron driver and the Subcritical Assembly System. The applicant stated, in part, that “[t]he interior surface of the IU shield wall was partitioned into two foot by two foot sections above the light water pool, and the neutron and gamma flux and dose rates in each section were calculated. The doses below the light water pool are not required for shielding purposes as this portion of the IU cell is below grade and there are no areas where personnel would normally be present below grade near the IU cell.” The applicant provided key assumptions, inputs, neutron and gamma dose rates, and fluxes impinging in the 1.8 m thick shield wall for the assertion that the dose rate at the exterior of the wall was <1 mrem/hr. The staff was able to determine through its qualitative assessment that concrete shielding provided for the IU cells was sufficient to reduce the average and peak dose rates at the interior of the shield wall from the neutron driver during operation to <1 mrem/hr at the wall exterior. A dose rate of 1 mrem/hr is below the limit in 10 CFR 20.1301(a)(2) of 2 mrem in any hour for an unrestricted area. From a radiation protection perspective, members of the public could occupy such areas without restriction. The staff found that a 1 mrem/hr dose rate was therefore acceptable from a design perspective for occupational exposure considerations. The staff will confirm that the final design conforms to this design basis during the evaluation of the SHINE FSAR.

The regulations in 10 CFR 50.34(a)(3)(i) require that preliminary design information provided for the facility include principal design criteria. SHINE PSAR, Section 11.1.1.1, “Airborne Radioactive Sources,” presents information on the management of airborne radioactive sources. It states that predicted personnel dose rates (including maintenance activity) due to airborne radioactivity and associated methodology will be presented in the FSAR for the SHINE facility. In RAI 11.1-1 (Reference 14), the staff asked the applicant to provide design information in sufficient detail (including key assumptions) to demonstrate the manner in which airborne radioactive material concentrations to which workers may be exposed (especially during maintenance activities) will be controlled in order to meet the derived air concentrations contained in 10 CFR Part 20, Appendix B, “Annual Limits on Intake (ALIs) and Derived Air Concentrations (DACs) of Radionuclides for Occupational Exposure; Effluent Concentrations; Concentrations for Release to Sewerage.” The staff further clarified the request by specifically asking the applicant to provide the following:

(a) The expected airborne radioactive material concentrations (partitioned into noble gases, radioiodines, and particulates) associated with normal operations of the facility compared to their respective derived air

concentrations in various areas that could be occupied by workers. Use definitions for airborne radioactivity areas similar to the following in terms of the derived air concentrations: Zone 1 (<0.01 – 1.0 derived air concentration), Zone 2 (1.0 - 10 derived air concentrations), and Zone 3 (>10 derived air concentrations);

(b) The expected airborne radioactive material concentrations associated with facility accidents compared to their respective derived air concentrations in various areas that could be occupied by workers; and

(c) Key assumptions associated with (a) and (b) above, including:

(i) The basis for the production rate data in PSAR, Table 11.1-9, "Target Solution Vessel (TSV), Noble Gas and Iodine Production Rates, Annual Releases, and Effluent Concentration Limits (ECL) Fraction at the Site Boundary after 960 Hours of Noble Gas Removal System (NGRS) Holdup";
(ii) A description of leakage pathways (including holdup and filtration/adsorption) from the point of production to the point of worker exposure; and
(iii) For the ventilation system: Key parameters and assumptions associated with the estimates of airborne radioactive material concentrations in work areas.

In response to RAI 11.1-1(a) (Reference 21), the applicant stated that the facility design maintains airborne radioactive material concentrations very low in normally occupied areas. Confinement and ventilation systems are designed to protect workers from sources of airborne radioactivity during normal operation and minimize worker exposure during maintenance activities, keeping with the ALARA principles outlined in 10 CFR 20. The applicant also stated that they have qualitatively assessed anticipated derived air concentrations for airborne radioactive material (noble gases, radioiodines, and particulates), above grade and within the RCA at the SHINE facility, during normal operations. The applicant provided PSAR Figure 11.1-1-1 as an illustrative depiction of this assessment. Partitioning of airborne radioactive material concentrations associated with normal operations into noble gases, radioiodines, and particulates will be provided in the FSAR. An issues management report (IMR) has been initiated to track the inclusion of this information in the FSAR. The staff estimated the dose equivalent associated with the Zone 1 concentrations (up to 1.0 derived air concentration (DAC)) was 5 rem/yr. The staff concluded that although this dose equivalent meets the annual occupational dose limits in 10 CFR 20.1201, it is not clear that such concentrations, if allowed to persist on a regular basis, would be considered ALARA. The upper limit for Zone 1 concentrations needs to be further evaluated at the FSAR stage to determine if additional measures, such as occupancy limitations, need to be applied as ALARA measures.

In response to RAI 11.1-1(b) (Reference 21), the applicant provided Table 11.1-1-1, showing the expected airborne radioactive material concentrations associated with facility accidents compared to their respective DACs. The occupational airborne concentration for each radionuclide was compared to the DAC contained in Appendix B to 10 CFR 20. A sum of fractions method was used to calculate values for noble gases, radioiodines, and particulates for each accident scenario. The DAC values are for areas that could be occupied by workers and are applicable throughout the RCA of the SHINE production facility building. Evacuation of the workers is to be completed within 10 minutes, as described in PSAR Tables 13a2.2.1-2 and

13b.2.1-2. The staff notes the maximum expected concentrations under accident conditions would result in a maximum dose that is within 10 CFR 20 limits and EPA Protective Action Guidelines.

In response to RAI 11.1-1(c) (Reference 21), the applicant indicated Table 11.1-9 provides the basis for the production rate data which consists of a single TSV operating at the licensed power limit. Cumulative fission yields were used to account for both instantaneous fission products and decay chain products that would be produced over the course of the entire operational cycle. All fission was assumed to occur by thermal neutrons in U-235. Fission of transmuted Pu-239 and fast neutron fission of U-238 were assumed to be negligible in comparison to U-235 fission rates. A total energy yield for neutron-induced fission of 200 MeV/fission was used. Decay constants for individual isotopes were used to convert the generation rate (atoms/sec) to a fission product activity generation rate (Ci/sec) for each radionuclide. The annual releases provided in Table 11.1-9 assume eight TSVs are in operation.

Further, the applicant stated that during normal operation, there are no significant anticipated leakage pathways for worker exposure in normally occupied areas to airborne radioactive material. Normally occupied areas within the RCA will be serviced by RVZ2 and RVZ3. Positive pressure will be maintained in normally occupied areas relative to RVZ1 areas, which potentially contain airborne radioactive materials. See PSAR Subsection 9a2.1.1 and the discussion of key parameters of the ventilation system below for additional information on the RV within the SHINE facility. For the leakage pathway to workers during accident events, excluding the TPS DBA, the applicant assumed that a maximum of 10 percent of the airborne release would escape from the confinement area (e.g., TOGS shielded cell, IU cell, noble gas storage cell, hot cells) penetrations prior to the evacuation. Also, for the releases involving target solution and the release from the TOGS, the applicant assumed that only 25 percent of the available source term is released from the TSV, piping, or TSV dump tank prior to evacuation of the facility (0.1 x 0.25 = 0.025). This assumption is made based on the systems operating near atmospheric pressure, leading to non-energetic releases, the slow pumping rate of the solution from the TSV dump tanks, and the maximum evacuation time for the facility being 10 minutes. For the TPS DBA, no reduction was credited for confinement features for workers, resulting in a leak path factor of 1.0. Regarding key parameters of the ventilation system during normal operations, the applicant states that ventilation within the SHINE facility is a once-through system with cascading ventilation zones designed to protect workers from exposure to airborne radioactive material. RVZ2 areas will receive outside air through the RVZ2SA air handling units and exhaust through the RVZ2 exhaust header, which will be maintained at a negative pressure relative to outside air. RVZ2 areas are expected to receive a small fraction of air from RVZ3, which also receives its supply air from the RVZ2SA air handing units. Areas serviced by RVZ1 (e.g., IU cells, hot cells) will be maintained at a negative pressure in relation to RVZ2 to prevent leakage of airborne radioactive material into normally occupied areas (see Subsection 9a2.1.1 of the PSAR for additional information on the RV). Regarding key parameters of the ventilation system during accident conditions, the applicant states that during an accident event in areas of the facility serviced by RVZ1, bubble-tight isolation dampers in the RVZ1 exhaust will close. No components of the RV (e.g., dampers or filters) are credited with reducing worker exposure during accident events.

While the staff finds that SHINE's preliminary analysis of expected airborne radioactivity concentrations meet the dose requirements of 10 CFR Part 20 and EPA Protective Action Guidelines and are sufficient to proceed with construction, due to the significant source term proposed in the liquid waste storage system and operator presence near the Molybdenum

Extraction and Purification System (MEPS), additional information is needed before construction is completed to confirm the adequacy of the design of SHINE's supercells and tank vaults. Specifically, SHINE's design must sufficiently shield personnel from the materials contained within the liquid waste storage tanks and MEPS to meet the proposed administrative limits for dose rate in normally occupied areas.

Therefore, the staff recommends that the construction permit include a condition that requires, prior to the completion of construction, SHINE submit periodic reports to the NRC, at intervals not to exceed 6 months from the date of the construction permit. As described in the proposed permit conditions in Appendix A of this SER, these reports shall provide the design information on the RPF supercells, tank vaults containing the liquid waste storage tanks, evaporation hot cells, and liquid waste solidification hot cells demonstrating shielding, and occupancy times within the RPF are consistent with as low as is reasonably achievable practices and dose requirements of 10 CFR Part 20.

As required by 10 CFR 50.34(a)(3)(i), the preliminary design information provided for the facility shall include principal design criteria. As specified in 10 CFR 20.1101(d), "[t]o implement the ALARA requirements of § 20.1101 (b), and notwithstanding the requirements in § 20.1301 of this part, a constraint on air emissions of radioactive material to the environment, excluding Radon-222 and its daughters, shall be established by licensees other than those subject to § 50.34a, such that the individual member of the public likely to receive the highest dose will not be expected to receive a total effective dose equivalent in excess of 10 mrem (0.1 mSv) per year from these emissions." As stated in 10 CFR 20.1301, each licensee shall conduct operations so that the total effective dose equivalent to individual members of the public from the licensed operation does not exceed 0.1 rem (1 mSv) in a year.

SHINE PSAR Section 11.1.1.1, "Airborne Radioactive Sources," presents information on the public doses to the Maximally Exposed Individual (MEI). Consistent with the guidance in NRC Regulatory Guide 4.20, "Constraint on Releases of Airborne Radioactive Materials to the Environment for Licensees other than Power Reactors" (Reference 85), the effluent concentration values are compared with the effluent concentration limits in 10 CFR Part 20, Appendix B, Table 2 for showing compliance with the requirements of 10 CFR 20.1101(d). These concentration limits, however, only account for environmental pathway doses attributed to the inhalation pathway. Other environmental pathways, such as for radioiodine accumulation via the air-pasture grass-milk pathway, merit evaluation in the calculation of the total effective dose equivalent to individual members of the public. NRC Regulatory Guide 1.109, "Calculation of Annual Doses to Man from Routine Releases of Reactor Effluents for the Purpose of Evaluating Compliance with 10 CFR Part 50, Appendix I," (Reference 86), may be used as a reference for evaluating environmental pathway doses, as needed.

In order for the NRC staff to determine the adequacy of SHINE's conduct of operations and implementation of ALARA requirements, additional information was needed on the total effective dose equivalent to individual members of the public, considering all environmental pathways, to demonstrate compliance with 10 CFR 20.1301.

Therefore, in RAI 11.1-9 (Reference 15), the staff asked the applicant to provide design basis dose calculations for the MEI, considering all age groups and all applicable pathways, examining, in particular, the closest recipients in each of the sixteen (16) meteorological sectors. The environmental pathway dose assessment should include, but not necessarily be limited to, the cow and goat milk from the two dairy operations noted in PSAR Section 11.1.7.2.3.

In response to RAI 11.1-9 (Reference 23), the applicant prepared an analysis of the total effective dose equivalent (TEDE) to individual members of the public, considering possible environmental pathways for airborne releases, to demonstrate compliance with 10 CFR 20.1301, as well as 10 CFR 20.1101(d). The applicant stated that the facility does not have liquid effluent pathways from the Radiologically Controlled Area (RCA). The applicant provided the design basis dose calculation for the MEI and the nearest full-time resident for normal operations in an attachment to the response titled, "Assessment of Dose to the Public due to Normal Gaseous Effluent Releases (ATKINS-NS-DAC-SHN-15-01, Revision 0)." The assessment analyzed releases using the GENII2 computer code, version 2.10.1. The analysis considered doses in each of the 16 meteorological sectors. Within 5 miles of the SHINE facility, there are both dairy and goat production. The analysis considered consumption of goat and cow milk and determined goat milk consumption was more limiting; therefore, the total doses are reported for the consumption of only goat milk. As shown in the calculation, the annual doses for the MEI and nearest full-time resident were calculated to be 9.0 mrem and 0.6 mrem, respectively.

As noted in RAI 11.1-9 (Reference 23), the effluent concentration limits (ECL) in 10 CFR Part 20, Appendix B, Table 2 only account for environmental pathway doses attributed to the inhalation pathway. The GENII2 computer code accounts for this pathway and other pathways, such as the meat ingestion, milk ingestion, and leafy vegetable ingestion pathways. As described in 10 CFR 20.1302(b), it is acceptable to demonstrate compliance with the annual dose limit in 10 CFR 20.1301 by calculating the TEDE to the individual likely to receive the highest dose from the licensed operation and comparing this to the annual dose limit. The applicant used this method to demonstrate compliance with the annual dose limit in 10 CFR 20.1301. The applicant also provided updates to PSAR Chapter 11 and 19 as a result of the response.

The response provided the requested environmental pathway dose analysis that addressed the 100 mrem/yr public dose limit and the ALARA provision of 10 CFR 20.1101(d). After reviewing SHINE's assessment, the staff concluded that the pedigree of the GENII2 computer code was not in question; rather, it was the specification of certain input parameters. Specifically, additional questions remained regarding the methods used for deposition for radioiodines. Following additional discussions, in its response to RAI 13a2.2-5 (letter dated May 20, 2015), SHINE committed to do additional analyses in the FSAR to show compliance with 10 CFR 20.1101(d), addressing effluent source term reflecting final design engineering controls, updated meteorological dispersion and deposition, radioiodine species and depositing fractions, and a final dose assessment. SHINE issued an Issues Management Report (IMR) to track the inclusion of this issue in the FSAR. The staff is keeping track of this commitment in Appendix A of this SER.

SHINE PSAR Section 11.1.1.1, "Airborne Radioactive Sources," states that "[t]he tritium purification system and neutron driver are designed such that the estimated annual doses to the maximally exposed individual (MEI) and the nearest resident are below the regulatory limits specified in 10 CFR 20.1101(d)." However, additional information was needed for the NRC staff to determine the adequacy of SHINE's implementation of the applicable limits of 10 CFR Part 20. Therefore, in RAI 11.1-11 (Reference 17), the staff asked the applicant to clarify that all the activities in the SHINE Radioisotope Production Facility are designed to meet the requirements of 10 CFR 20.1101(d), as the current statement in the SHINE PSAR only applies to the tritium purification system and neutron driver.

In response to RAI 11.1-11, (Reference 26),the applicant stated that, in addition to the design of the Tritium Purification System (TPS) and the neutron driver, all activities in the IF and RPF are designed to meet the dose constraint specified in 10 CFR 20.1101(d). SHINE has revised PSAR Section 11.1.1.1 to clarify that activities in the IF and RPF are designed such that the estimated annual doses to the MEI and the nearest resident are below the dose constraint specified in 10 CFR 20.1101(d). The staff finds that this response sufficiently clarified SHINE's intent to comply with dose constraints in 10 CFR 20.1101(d) for the activities in the IF and RPF and demonstrates an adequate methodology for a preliminary design.

SHINE PSAR Section 11.1.1 (page 11-2), states that special nuclear material inventories are tabulated in Tables 4b.4-1 and 4b.4-13 for the SHINE Radioisotope Production Facility (RPF). The amount of U-235 represented in Table 4b.4-1 (based on the inventory of special nuclear material and the level of enrichment) does not seem to agree with the amount of U-235 process inventory specified in Table 4b.4-13. Therefore, in RAI 11.1-14 (Reference 17), the staff asked the applicant to specify the quantity of special nuclear material and U-235 processed at one time in the RPF, ensuring that the values in Tables 4b.4-1 and 4b4-13 are consistent.

In response to RAI 11.1-14 (Reference 26), the applicant provided the RPF inventory of SNM, which includes: storage, preparation processes, awaiting reuse in the TSV or other processing/adjustment, active extraction processes, Uranyl Nitrate Conversion System (UNCS) processes, and waste streams and packaged waste. The applicant discussed how Table 4b.4-1 represents an estimate of the total SNM inventory within the RPF at one time. The applicant then discussed that the values in Table 4b.4-13 of the PSAR specify only a per batch quantity of the fissile isotopes uranium-233, uranium-235, and plutonium-239, rather than a total inventory (e.g., eight batches of recycled target solution can be contained within the eight target solution hold tanks). Based on this information, the applicant stated that the values in Table 4b.4-1 and Table 4b.4-13 provide alternate means to estimate the quantity of SNM in the RPF, and are not inconsistent. The staff finds this response clarified the values in Tables 4b.4-1 and 4b.4-13 and demonstrates an adequate methodology for a preliminary design.

SHINE PSAR Section 11.1.1, (page 11-2) contains a commitment to implement sufficient shielding to ensure direct exposure rates do not exceed 0.25 mrem/hr, except during tank transfers. The staff determined it needed additional information on the dose rates that will occur during the tank transfers to ensure consistency with ALARA and the dose limits. Therefore, in RAI 11.1-15(a) (Reference 17), the staff asked the applicant to explain why dose rates during tank transfers that exceed 0.25 mrem/hr are acceptable and consistent with ALARA principles. The RAI asked SHINE to explain why shielding will not be used for the tank transfers.

In response to RAI 11.1-15(a) (Reference 26), the applicant stated that it is committed to an operating philosophy that maintains occupational exposures to radiation consistent with ALARA principles. These ALARA principles include limiting exposure through temporary and permanent shielding of radioactive material, providing sufficient distance between personnel and radioactive material, and limiting the time personnel are exposed to radioactive material. SHINE stated that the facility will be designed to the goal of 0.25 mrem/hr for normally occupied locations during normal operations, which includes routine, planned tank transfers. For example, SHINE evaluated the shielding requirements for the operator workstation of the Mo-99 extraction Supercell assuming target solution is being transferred through the cell for the extraction process. Shielding thickness was set to meet the goal of 0.25 mrem/hr during this process. SHINE stated that some areas in the SHINE facility, such as areas where target solution piping transitions into a hot cell, may have dose rates that locally exceed 0.25 mrem/hr during some solution transfers. The increased dose rates will be monitored by RP staff and the

areas will be posted appropriately. The staff finds this response clarified that the tank transfer shielding design is consistent with ALARA principles, and is therefore acceptable.

Additionally, SHINE PSAR Section 11.1.1.1 provides annual dose estimates for the maximum exposed member of the public, but does not state whether the dose rate limit in 10 CFR 20.1301 will also be met. Therefore, in RAI 11.1-15(b) (Reference 17), the staff asked the applicant to demonstrate that in addition to meeting the annual dose limit, the dose rate limit in 10 CFR 20.1301 will also be met.

In response to RAI 11.1-15(b) (Reference 26), the applicant states that annual doses to the public were calculated and were determined to be below the annual dose limit from airborne effluents in 10 CFR 20.1301 of 0.1 rem/yr and below the 10 CFR 20.1101 ALARA air emissions annual dose constraint of 0.01 rem/yr. Exposures are due to the periodic release of decayed noble gases in the NGRS to the PVVS and normal continuous releases of Ar-41 from IU cells. PVVS and the IU cells are connected to RVZ1, which exhausts to the atmosphere through the facility exhaust stack. SHINE expects the Ar-41 releases to be continuous during operation and calculated such releases to result in less than 1 mrem TEDE to the MEI over the course of a year. SHINE estimated the total dose to the MEI at 9.0 mrem over an entire year. Based on this, SHINE estimates that the unrestricted area dose rate will be less than 0.0009 rem in any one hour, well below the 10 CFR 20.1301 dose rate limit of 0.002 rem in any one hour.

The staff finds that based on assumed releases from the NGRS, SHINE's design of the NGRS demonstrates an ability to meet the requirements in 10 CFR 20.1301. The staff will confirm that the final design conforms to this design basis during the evaluation of SHINE's FSAR.

SHINE PSAR Section 11.1.1.2, (page 11-3 and 11-4) "Liquid Radioactive Sources," describes liquid radioactive sources at the SHINE facility. However, the staff determined it needed additional information to determine the adequacy of the design of the SHINE facility to protect workers and the public from radiation exposures due to liquid radioactive sources. Therefore, in RAI 11.1-16 (Reference 17), the staff asked the applicant to provide a description of the safety features in place to prevent exposures to liquid radioactive sources, (e.g., regular maintenance, shielding, berms).

In response to RAI 11.1-16 (Reference 26), the applicant stated there are safety features in place to prevent exposures to liquid radioactive sources. The primary barriers to preventing worker exposure to liquid radioactive sources are prevention of leakage and shielding. SHINE stated that the systems that contain radioactive liquids will be made from corrosion-resistant materials based on the chemical composition of the materials they contain, to minimize the potential for leaks. The applicant stated that it will have a Preventive Maintenance Program for components such as valves to identify, prevent, and correct leakage. Significant radioactive liquid sources (e.g., the irradiated target solution material, UREX process, and raffinate waste liquid from UREX) will be located in shielded cells, underground vaults, and trenches. SHINE also stated that berms will be used as needed in conjunction with other leak collection safety features to direct and contain radioactive liquid leak flows and reduce potential for personnel exposure should a leak occur.

The staff finds this response adequately describes safety features that will be in place to prevent exposures to liquid radioactive sources to meet the acceptance criteria in NUREG-1537, Section 11.1.1, and is therefore acceptable for a preliminary design.

On the basis of its review, the staff has determined that the level of detail provided for the preliminary design satisfies the applicable acceptance criteria of NUREG-1537, Part 2, Section 11.1.1, allowing the staff to make the following relevant findings: (1) potential radiation sources and associated doses including the inventories, chemical and physical forms, and locations of radioactive materials, and other facility radiation and operational parameters related to radiation safety presented in the PSAR have been sufficiently described; (2) the bases for identifying potential radiation safety hazards with the process and facility descriptions have been compared to verify that such hazards were accurately and comprehensively identified; and (3) the PSAR identifies the potential radiation safety hazards associated with the SHINE facility and provides an acceptable basis for the development of the radiation protection program.

Therefore, with the exception of the aforementioned construction permit condition, the staff finds that the radiation sources of the SHINE facility meets the applicable regulatory requirements and acceptance criteria of NUREG-1537 for the issuance of a construction permit in accordance with 10 CFR 50.35 and 50.40.

11.4.2 Radiation Protection Program

The staff evaluated the information provided on the radiation sources, as described in SHINE PSAR Section 11.1.2, “Radiation Protection Program,” using the guidance and acceptance criteria from Section 11.1.2, “Radiation Protection Program,” of NUREG 1537, Parts 1 and 2.

Consistent with the review procedures of NUREG-1537, Part 2, Section 11.1.2, the staff evaluated: (1) the roles, responsibilities, authorities, organization, and staffing of the radiation protection organization; (2) the roles, responsibilities, authorities, staffing, and operation of committees responsible for the review and audit of the radiation protection program; (3) the effectiveness and comprehensiveness of the radiation protection training program; (4) radiation protection plans and information that form the bases of procedures and the management systems employed to establish and maintain them; (5) the effectiveness and comprehensiveness of the program for independent oversight reviews and audits of the radiation protection program; (6) the effectiveness and comprehensiveness of the process to evaluate the radiation protection program to improve the program and the process to examine problems and incidents at the facility; and (7) the management of records relating to the radiation protection program.

Although it is also a part of the Chapter 9 material that discusses RCA material handling, RAI 11.1-2 and its response are discussed in this section because of the importance of having appropriately trained radiation workers.

SHINE PSAR, Section 9b.7.2, “RCA Material Handling,” provides information on the equipment used to move or manipulate radioactive material within the RCA, but there is no discussion or reference to the training/qualification of personnel who operate the equipment. In addition, as required by 10 CFR 71.5, “Transportation of licensed material,” any facility that transports and delivers shipments from across state lines must assure that its personnel, who are expected to handle radioactive materials, are adequately trained and qualified in accordance with U.S. Department of Transportation regulations in 49 CFR Part 172, “Hazardous Materials Table, Special Provisions, Hazardous Materials Communications, Emergency Response Information, Training Requirements, And Security Plans,” Subpart H, “Training.”

Therefore, in RAI 11.1-2 (Reference 14), the staff asked the applicant to provide additional information clarifying whether the training and qualification program for radiation workers will

include elements to assure that personnel who are expected to handle radioactive materials are adequately trained and qualified in accordance with 49 CFR Part 172, Subpart H.

In response to RAI 11.1-2 (Reference 20), the applicant responded that in accordance with 10 CFR 71.5, the SHINE Training Program will include elements to assure that radiation workers expected to handle radioactive materials are adequately trained and qualified in accordance with Subpart H of 49 CFR Part 172. The staff finds this response sufficiently provided the applicant's intent to ensure radiation workers will be appropriate training and qualified in accordance with Subpart H of 49 CFR Part 172.

SHINE PSAR Section 11.1.2.1.5, (pg. 11-8) "Commitment to Written Radiation Protection Procedures," states that radiation work permits (RWPs) will be used for both routine and non-routine activities. The NRC staff determined it needed additional information to determine the adequacy of the organization of SHINE's radiation protection program procedures. The description of RWPs appears contradictory because it requires RWPs for routine activities which should already be covered by existing operating procedures. Therefore, in RAI 11.1-17 (Reference 17), the staff asked the applicant to clarify the conditions under which RWPs will be used and clarify under what conditions routine activities, typically covered by existing operating procedures, would also require RWPs.

In response to RAI 11.1-17 (Reference 26), the applicant stated that all work in the RCA will be performed under a RWP, including any activity in the RCA covered by an existing operating procedure. The applicant also revised PSAR Section 11.1.2.1.5 to clarify that all work performed in the RCA is performed consistent with an RWP. The staff finds this response sufficiently provided the applicant's intent to conduct work under a RWP.

On the basis of its review, the staff has determined that the level of detail provided on the radiation protection program is adequate and satisfies the applicable acceptance criteria of NUREG-1537, Part 2, Section 11.1.2, allowing the staff to make a finding that the applicant's commitments to develop and conduct a radiation protection program as presented in the PSAR: (1) will likely comply with applicable requirements; and (2) gives reasonable confidence that management's commitment to radiation protection in all activities will protect the facility staff the environment, and the public from unacceptable exposure to radiation.

Therefore, the staff finds that the radiation protection program is sufficient and meets the applicable regulatory requirements and guidance for issuance of a construction permit in accordance with 10 CFR 50.35.

11.4.3 ALARA Program

The staff evaluated the sufficiency of the provisions at the facility for maintaining worker and public doses and radiological releases ALARA, as described in SHINE PSAR Section 11.1.3, "ALARA Program," using the guidance and acceptance criteria from Section 11.1.3, "ALARA Program," of NUREG-1537, Part 2.

Consistent with the review procedures of Section 11.1.3 of NUREG-1537, Part 2, the staff considered the elements of the ALARA program to ensure: (1) radiation doses received by facility staff and members of the public are maintained as low as is reasonably achievable; (2) the highest levels of facility management are committed to the ALARA program; (3) exposure records are periodically reviewed, analyzed for trends and factors, and methods evaluated for reducing exposures; and (4) sufficient emphasis and resources are given to

ALARA considerations during design, construction, operation, maintenance, and disposal activities.

The staff's review determined that the ALARA program proposed by SHINE consisted of two primary components: (1) overall program considerations (including design, construction, and operations policies); and (2) program design considerations. In terms of ALARA policies, the PSAR states that SHINE will update and modify facility design and layout as experience is gained related to plant design and layout regarding traffic control, security, access control and health physics. Regarding program design considerations, the PSAR notes that key operational elements of equipment and facility design to maintain exposures ALARA have been considered, for example: (1) locating equipment, instruments, and sampling stations that require routine maintenance such that easy access is promoted and occupancy time is minimized; (2) locating redundant component containing radioactive material in separate compartments so that the operating component does not cause significant radiation exposure to individuals performing maintenance on the shutdown component; and (3) providing adequate space to store and utilize mobile shielding when needed.

SHINE PSAR, Section 11.1.2, "Radiation Protection Program," and Section 11.1.3, "ALARA Program," discuss SHINE's commitment to the radiation protection program implementation and the proposed content of the ALARA program. Responsibilities of the plant manager and the environment, safety and health manager (and his subordinate, the radiation protection manager) are outlined with regard to the control of occupational radiation exposure. Both individuals report to the chief operating officer, providing the needed separation of the radiation protection component from the operating component.

The staff noted that missing from the PSAR, however, was the commitment to develop a management policy statement(s) that demonstrates SHINE's commitment to maintaining occupational and public radiation exposures ALARA. Therefore, in RAI 11.1-3 (Reference 14), the staff asked the applicant to provide such a commitment to develop an ALARA policy statement(s).

In response to RAI 11.1-3 (Reference 20), the applicant stated that the SHINE Radiation Protection Program will include a management policy statement, demonstrating SHINE's responsibility to maintain occupational and public radiation exposures ALARA. SHINE initiated an IMR to track the inclusion of an ALARA policy statement in the Radiation Protection Program. Following the receipt of SHINE's FSAR, staff will confirm that this issue has been resolved.

SHINE PSAR Section 11.1.3.2.1, "General Design Considerations for ALARA Exposures," indicates that ALARA is applied to the general design considerations and methods without any explanation. Therefore, in RAI 11.1-12 (Reference 17), the staff asked the applicant to describe how ALARA is applied to the general design considerations and methods.

In response to RAI 11.1-12 (Reference 26), the applicant stated that general design considerations and methods to maintain in-plant radiation exposures ALARA at the SHINE facility are consistent with the recommendations of Regulatory Guide 8.8, "Information Relevant to Maintaining Occupational Radiation Exposure as Low as Practicable (Nuclear Reactors)" (Reference 87). SHINE also stated that ALARA design considerations are described in PSAR Sections 11.1.3.2.1, 11.1.3.2.2, and 11.1.3.2.3. The staff finds this response adequately describes how ALARA is applied to meet the acceptance criteria in NUREG-1537, Part 2, Section 11.1.3.

SHINE PSAR Section 11.1.3.2, “ALARA Program Design Considerations,” states in part, that “[t]he basic management philosophy guiding the SHINE facility design effort so that radiation exposures are ALARA can be expressed as: [d]esign structures, systems and components to reduce the radiation fields and control streaming, thereby reducing radiation exposure during operation, maintenance, and inspection activities.” However, additional information was needed for the NRC staff to determine whether the design of structures, systems, and components to reduce radiation fields and control streaming are designed to meet ALARA requirements. Therefore, in RAI 11.1-13 (Reference 17), the staff asked the applicant to describe how the ALARA concepts of time, distance and shielding are incorporated into the design of structures, system and components for employee work stations.

In response to RAI 11.1-13 (Reference 26), the applicant stated that employee work stations within the RCA will be designed using the ALARA concepts of time, distance, and shielding to minimize employee exposures. The applicant further described how time, distance and shielding concepts would be integrated into employee work stations. The applicant also provided PSAR Section 11.1.1, which states that the goal for the normal operations dose rate for normally occupied locations in the facility is 0.25 mrem/hr at the surface, which is inconsistent with Subsections 3.5a.10.2.2 and 3.5b.1.9.2.2 with respect to the design dose rate of 0.25 mrem/hr at 12 in. from the surface. SHINE has revised PSAR Section 11.1.1 to state that the goal for the normal operations dose rate for normally occupied locations in the facility is 0.25 mrem/hr at 12 in. from the surface of the shielding.

On the basis of its review, the staff has determined that the level of detail provided on the ALARA program satisfies the applicable acceptance criteria of NUREG-1537, Part 2, Section 11.1.3, and is consistent with applicable guidance contained in Regulatory Guide 8.8 (Reference 87), and Regulatory Guide 8.10, “Operating Philosophy for Maintaining Occupational Radiation Exposures As Low As Practicable” (Reference 88). Thus, the staff makes the following relevant findings: (1) the applicant has clearly defined an ALARA program that has guided the design of plant features to ensure occupational and public exposures will be maintained at the lowest practicable level; (2) the applicant has designated a responsible individual for developing the ALARA program and formally evaluating its effectiveness annually; and (3) a number of ALARA features have been included in plant design, such as attention to shielding to avoid radiation streaming situations, inclusion of maintenance features that provide for remote handling and flushing of components, features that minimize build-up of radioactive material in pipes, tanks, and other components, and separation of components and use of shielding whenever practical.

Therefore, the staff finds that the ALARA program is sufficient and meets the applicable regulatory requirements and guidance for issuance of a construction permit in accordance with 10 CFR 50.35 and 50.40.

11.4.4 Radiation Monitoring and Surveying

The staff evaluated the sufficiency of the radiation monitoring equipment and the performance of radiation surveys, as described in SHINE PSAR Section 11.1.4, “Radiation Monitoring and Surveying,” using the guidance and acceptance criteria from Section 11.1.4, “Radiation Monitoring and Surveying,” of NUREG-1537, Part 2.

Consistent with the review procedures of Section 11.1.4 of NUREG-1537, Part 2, the staff considered the design of the instrumentation systems used for both routine and special radiation monitoring and sampling to ensure compliance with the applicable acceptance criteria. The

staff evaluated the positions of air sampling or monitoring equipment to measure airborne concentrations of radioactive material to which people are exposed. The staff considered whether radiation monitoring and alarms, as described in the PSAR, provide adequate warning and coverage and are of sufficient sensitivity to ensure that any significant increase in radiation exposure rates or concentration of airborne radioactive material within the restricted area, controlled area (if present), or in the unrestricted area would be detected and would initiate appropriate annunciation or action. The staff coordinated this review with the Chapter 7, "Instrument and Control Systems," review and evaluated the design of the radiation instrumentation systems used for radiation monitoring and dosimetry to verify compliance with the acceptance criteria. The staff also considered whether these radiation monitors and alarm systems will be maintained, operated, calibrated, and subjected to surveillance in compliance with the appropriate standards and are addressed in the technical specifications. Finally, the staff reviewed the facility warning and annunciator systems to ensure they are designed to alert personnel to a radiological hazard or abnormal condition in sufficient time to enable them to respond in a planned appropriate manner. The staff also confirmed that the interface between the radiation monitoring system and the engineered safety features (as discussed in Chapter 6) and the discussion of the radiation monitoring system in the emergency plan are appropriate.

The applicant has stated that several different types of sampling and monitoring equipment will be located at points within the RCA, at control points where exits from the RCA occur, and at the plant stack where effluents may be released. The applicant notes that continuous air monitors (CAMs) will be used in the controlled and restricted areas of the facility; however, the specific locations and number of such CAMs were not provided. Airborne tritium sampling is proposed in PSAR 11.1.4.1 for each of the IU cells, and the tritium purification system glovebox room. The stack release monitor will provide continuous monitoring of noble gases and continuous sampling of radioiodines, particulates, and tritium. Control point monitoring will be performed using a combination of portal monitors, friskers, hand/foot monitors, and small article (hand tools) monitors. The staff notes that details vary in terms of their level of specificity; however, the commitments and general descriptions are sufficient for the PSAR and, therefore, are acceptable.

Regarding radiation surveys, the applicant has stated that written procedures will be developed to orchestrate the surveillance program and that it will ensure compliance with the requirements of Subparts C, F, L, and M of 10 CFR Part 20. The applicant has also stated that the guidance of several Regulatory Guides (8.2, 8.7, 8.9, 8.24, and 8.34) (References 80-84, respectively) will be met when the program is implemented. These commitments and general descriptions are viewed as sufficient for the PSAR and, therefore, are acceptable.

SHINE PSAR Section 11.1.4.1, "Radiation Monitoring," provides an overview of the survey and monitoring program and indicates that radiation area monitors (RAMs) will be used at the SHINE facility. However, there was neither information on oversight and implementation of the radiation monitoring program nor the location or conditions that will be present for these monitors to be installed. Therefore, the NRC staff determined that additional information was needed to determine the adequacy of the design of the SHINE facility to ensure that air, liquids, solids, and reactor radiation beams and effluents are monitored and sampled as necessary. Further information was also needed to determine that radiation monitoring equipment will have the appropriate calibration and maintenance to ensure that contamination monitoring procedures performed at the control point meet 10 CFR Part 20 requirements regarding the performance of radiation surveys.

Therefore, in RAI 11.1-18 (Reference 17), the staff asked the applicant to: (a) provide additional information on the location and conditions that will result in the instillation of RAMs and provide sufficient information to determine if RAMs will be used in locations where exposures may exceed administrative limits under normal operations or credible accident conditions, as determined by the Integrated Safety Analysis or equivalent means; (b) describe the function or program (e.g., radiation protection program) that is responsible for implementing the radiation survey and monitoring program and will have written procedures that specify the types, times, and methods for radiation sampling and monitoring; (c) specify the alarm levels or identify the function or program (e.g., radiation protection program) responsible for setting these limits and the methodology to be used to establish these values (e.g., administrative limits; and (d) provide additional information to clarify which group (e.g., the radiation protection program) is responsible for maintaining and checking the radiological monitoring equipment.

In response to RAI 11.1-18 (Reference 26), SHINE stated that will provide the requested information in the radiation protection program in the FSAR as part of the detailed design. The staff finds this information is largely procedural in nature and therefore acceptable to submit with the FSAR.

SHINE PSAR Section 6b.2.1.2, (page 6b-5) “Confinement System and Components,” and Table 6b.1-1, “Summary of RPF Design Basis Events and ESF Provided for Mitigation,” indicate that the confinement systems for the hot cell and the radiological integrated control system (RICS) are considered safety-related systems, structures and components (SSCs). In order to assess whether SHINE’s radiation monitoring systems are adequately designed to remain available and reliable for the engineered safety features, in RAI 11.1-19 (Reference 17), the staff asked the applicant to: (1) clarify whether the items used for the RICS for the hot cells and other potentially high radiation areas are safety-related SSCs, and (2) demonstrate that radiation monitors (e.g., CAMS and RAMS) used as SSCs or for SSCs have appropriate controls (e.g., management measures) to ensure they remain available and reliable.

In response to RAI 11.1-19 (Reference 17), the applicant stated the RICS initiates engineered safety features (ESF) actuation for RPF hot cells and other isolable areas (e.g., noble gas shielded cell, RVZ2 isolation) that require isolation upon measured parameters exceeding setpoints as determined in the safety analysis. Safety-related confinement isolation actuation by RICS is described in PSAR Section 6b.2.1. SHINE also stated that RAMS is a safety-related system and the components of RAMS necessary for the RICS safety-related confinement isolation function are safety-related. However, SHINE has not classified the CAMS as safety-related since it is not credited with providing safety-related information for confinement isolation actuation. SHINE revised PSAR Sections 7a2.7.4.3 and 7b.1.3 of the PSAR to remove the reference to CAMS providing input to RICS for ESF functions. The staff finds the response clarifies the classification and function of the RICS, RAMS and CAMS, to meet the acceptance criteria in NUREG-1537 Section 11.1.4.

On the basis of its review, the staff has determined that the level of detail provided on radiation monitoring and surveying satisfies the applicable acceptance criteria of NUREG-1537, Part 2, Section 11.1.4, allowing the staff to make the following relevant findings: (1) the fixed and portable equipment used for radiation monitoring and sampling inside the facility are appropriate for the tasks needed to be performed; (2) the general types of monitoring and surveillance equipment appear appropriate to the facility; and (3) the commitments to implement a program consistent with the Regulatory Guides noted above give reasonable assurance that radioactive material and associated radiation exposures will be detected, monitored, and sampled consistent with 10 CFR Part 20 requirements and the facility ALARA program.

Therefore, the staff finds that the design of radiation monitoring and surveying provisions is sufficient and meets the applicable regulatory requirements and guidance for issuance of a construction permit in accordance with 10 CFR 50.35 and 50.40.

11.4.5 Radiation Exposure Control and Dosimetry

The staff evaluated the sufficiency of the radiation exposure control and dosimetry provisions, as described in SHINE PSAR Section 11.1.5, “Radiation Exposure Control and Dosimetry,” using the guidance and acceptance criteria from Section 11.1.5, “Radiation Exposure Control and Dosimetry,” of NUREG-1537, Part 2 and the ISG Augmenting NUREG-1537, Part 2.

Consistent with the review criteria of NUREG-1537, Part 2, Section 11.1.5, the staff examined the facility exposure control and dosimetry programs for both external exposures and internal exposures to facility personnel, the environment, and the public to confirm that plans and the bases of procedures for the control of external dose to workers and the public consider equipment and equipment design, shielding, radiation monitors and alarms, personnel protective equipment, and external radiation monitoring dosimetry. The staff also considered whether procedures for the control of internal exposure consider equipment and equipment design, engineered controls, personnel protective equipment, radiation monitors, alarms and samplers, bioassay methods, frequency, and action levels, and the models and methods used for internal dose evaluation. The staff reviewed the engineered controls used to ensure radiation protection safety for each of the sources of radiation and radioactive material described in Section 11.1.1. The staff considered whether radiation protection measures have been implemented for sources of radiation and radioactive material. The staff confirmed that the radiation dose limits and bases are identified and the plans and programs to control doses are documented. The staff reviewed the descriptions of facility exposure conditions and methods used to derive administrative radiation dose limits. The staff evaluated whether the radiation protection engineered controls (e.g., the provisions of shielding, ventilation systems, remote handling systems) have been designed to reduce the potential for uncontrolled exposure or release and have been incorporated in the facility. The staff also considered how records will be kept to establish the conditions under which individuals were exposed to radiation.

SHINE PSAR, Section 11.1.3, “ALARA Program,” states, in part, that the “ALARA concept is also incorporated into the design of the facility. The plant is divided into radiation zones with radiation levels that are consistent with the access requirements for those areas. Areas where on-site personnel spend significant amounts of time are designed to maintain the lowest dose rates reasonably achievable.” However, the staff determined that additional information was needed on the radiation zones to determine their consistency with ALARA. Therefore, in RAI 11.1-4 (Reference 14), the staff asked the applicant to provide the radiation zone designations based on a consideration of neutron and gamma dose rates for locations that could be occupied, as well as the unrestricted environment as referenced in SHINE PSAR, Section 4a2.5.4.

In response to RAI 11.1-4 (Reference 21), the applicant stated that it will use radiation area designations, as defined in 10 CFR 20, including consideration for neutron and gamma dose rates: unrestricted area, radiation areas, high radiation areas (HRAs), and very high radiation areas (VHRAs). The applicant further stated that the facility will be designed and constructed so that the measurable dose rate in the normally occupied and unrestricted area due to activities at the plant will be less than the limits of 10 CFR 20.1301(a)(2). The staff finds this response provides zone designations based on a consideration of neutron and gamma dose rates consistent with ALARA, and is therefore acceptable.

The regulations in 10 CFR 20.1902, “Posting requirements,” define the manner in which various radiological control areas should be demarcated. Included therein are requirements for Radiation Areas, High Radiation Areas, Very High Radiation Areas and Airborne Radioactivity Areas. SHINE PSAR, Section 11.1.5.1.1, “Radiological Zones,” Item b, “Restricted Area,” defines the types of restricted areas to be used for the purpose of radiological control. All of the posting requirements noted above have been included, except for a Very High Radiation Area.

Therefore, in RAI 11.1-5 (Reference 14), the staff asked the applicant to provide either: (a) a commitment that all Very High Radiation Areas included in the plant design will meet the requirements of 10 CFR Part 20, Subpart G, “Control of Exposure From External Sources in Restricted Areas,” or (b) Provide a basis for not including Very High Radiation Areas in the plant design (i.e., why such controls will not be necessary).

In response to RAI 11.1-5, the applicant stated that, in addition to those types of restricted areas defined in Subsection 11.1.5.1.1.b of the PSAR, very high radiation areas included in the facility design will be posted in accordance with the requirements of 10 CFR 20. Specifically, very high radiation areas will meet the requirements of 10 CFR 20, Subpart G. SHINE updated the PSAR to include a definition of very high radiation areas in the list of restricted area types provided in Subsection 11.1.5.1.1.b. The staff finds this response is consistent with the requirements of 10 CFR 20.1902, and is, therefore, acceptable.

SHINE PSAR 11.1.5.1.1, (page 11-19) “Radiological Zones,” describes radiation zones that have varied definitions and span of control. However, the NRC staff determined additional information was needed to understand how these radiological zones operate and would be used to: (1) control the spread of contamination, (2) control personnel access to avoid unnecessary exposure of personnel to radiation, and (3) control access to radioactive sources present in the facility. Therefore, in RAI 11.1-20 (Reference 17), the staff asked the applicant to provide additional information describing how the radiological zones are defined, how they work, how each zone is physically separated from other zones, and how the zones are maintained.

In response to RAI 11.1-20 (Reference 26), the applicant referenced the response to RAI 9a2.1-3, which provides additional information describing how the RCA ventilation zones are defined, how they work, how each zone is physically separated from other zones, and how the zones are maintained. Additionally, the applicant referenced PSAR Subsection 11.1.5.1.1, which describes radiation areas in the RCA with respect to varying radiation levels and varying contamination levels. SHINE also referenced its previous responses to RAIs 11.1-1 and 11.1-4 for additional information on anticipated radiation areas and airborne radioactive material concentration zones (Reference 14). The staff finds this response describes how radiological zones are defined and would operate, and is therefore acceptable.

SHINE PSAR 11.1.5.2, “Access and Egress Control,” refers to active and passive engineered safeguards to control access to high radiation areas. However, the NRC staff determined that additional information was needed to determine the adequacy of the design of entry control devices to alert workers to, or prevent unauthorized entry to specified radiation areas, as appropriate. Therefore, in RAI 11.1-21 (Reference 17), the staff asked the applicant to: (a) provide a description of the active and passive safety systems that are used to control access to high radiation areas; and (b) clarify whether the “engineered safeguards” discussed in PSAR Section 11.1.5.2, are security-related, consistent with the guidance in NUREG-1537, Section 12.8, “Security Planning.”

In response to RAI 11.1-21(a) (Reference 26), the applicant stated that active and passive safety features will be provided to control access to high radiation areas in accordance with 10 CFR 20.1601. These safety features include: personnel access door interlocks, audible and visual warnings, and shielding in the form of engineered physical barriers. The applicant revised PSAR Section 11.1.5.2 to include the safety features used to control access to high radiation areas described above.

In response to RAI 11.1-21(b), the applicant referenced PSAR Section 11.1.5.2, which states:

> Because there are high radiation areas in the facility, access to those areas is physically prevented due to radiation level. Access control is by a combination of administrative methods and active as well as passive engineered safeguards.

The applicant stated that the term “engineered safeguards” discussed above is not security-related, consistent with the guidance provided in NUREG-1537 Section 12.8, Regulatory Guide 5.59 (Reference 56), and Regulatory Issue Summary 2005-31, “Control of Security-Related Sensitive Unclassified Non-Safeguards Information Handled by Individuals, Firms, and Entities Subject to NRC Regulation of the Use of Source, Byproduct, and Special Nuclear Material” (Reference 89). The applicant further stated that the access control program, described in PSAR Section 11.1.5.2, ensures that: (a) signs, labels, and other access controls are properly posted and operative; (b) restricted areas are established to prevent the spread of contamination and are identified with appropriate signs; and (c) step-off pads, change facilities, protective clothing facilities, and personnel monitoring instruments are provided in sufficient quantities and locations.

The staff finds this response provides a description of the active and passive safety systems used to control access to high radiation areas and clarifies whether the “engineered safeguards” discussed in PSAR Section 11.1.5.2, are security-related, and is therefore acceptable.

SHINE PSAR Section 9a2.1.1, (page 9a2-2) “Radiologically Controlled Area Ventilation System,” indicates the automatic cell ventilation dampers are safety-related. However, the NRC staff determined that additional information was needed to determine the adequacy of the design basis for the SHINE automatic cell ventilation dampers to ensure ALARA considerations are maintained. Therefore, in RAI 11.1-22(a) (Reference 17), the staff asked the applicant to identify the management measures required to ensure the safety-related dampers remain available and reliable to ensure radiation doses are maintained ALARA and within regulatory limits.
In response to RAI 11.1-22(a) (Reference 26), the applicant stated that isolation damper operability will be controlled by TS, as specified by Item 3.5 of PSAR Table 14a2-1. SHINE further stated that its Quality Assurance Program, Preventive Maintenance Program, and TS surveillance activities will ensure the dampers remain available and reliable to ensure radiation doses are maintained ALARA and within regulatory limits.

The staff finds this response provides a design basis for the SHINE automatic cell ventilation dampers to ensure ALARA considerations are maintained, and is therefore acceptable. The staff will confirm that the final design conforms to this design basis during the evaluation of SHINE’s FSAR.

SHINE PSAR Section 9a2.1.1, (page 9a2-3) “Radiologically Controlled Area Ventilation System,” indicates that flow control valves will maintain constant pressure for the fume hoods. However, the NRC staff determined that additional information was needed to determine that

the appropriate minimum pressure gradient will be maintained across the fume hood threshold. Therefore, in RAI 11.1-22(b) (Reference 17), the staff asked the applicant to demonstrate that a minimum pressure gradient will be maintained across the fume hood threshold consistent with guidance in Regulatory Guide 8.24, "Health Physics Surveys During Enriched Uranium-235 Processing and Fuel Fabrication" (Reference 83).

In response to RAI 11.1-22(b) (Reference 26), the applicant stated it would follow the guidance provided in Regulatory Guide 8.24 for fume hood operations and maintenance involving uranium-235 processing. Issues identified during fume hood surveys, operations, and maintenance would be placed in the SHINE Corrective Action Program. SHINE would terminate fume hood work if parameters are found to be below acceptable levels, as specified in Regulatory Guide 8.24.

The staff finds this response discusses how the minimum pressure gradient will be maintained across the fume hood threshold consistent with Regulatory Guide 8.24.

The ISG Augmenting NUREG-1537, Part 2, Section 11.1, "Radiation Protection," states, in part:

> [I]ndividuals who are not workers, as defined in 10 CFR 70.4, may be permitted to perform ongoing activities…in the controlled areas if the licensee…[p]rovides training that satisfies 10 CFR 19.12(a)(1)-(5) to these individuals and ensures that they are aware of the risks associated with accidents involving the licensed activities as determined by the ISA…

While SHINE PSAR Section 13b.2.1.2, "Identification of Initiating Events and Causes," discusses a rupture of five noble gas storage tanks, it does not identify the credible accident events that could initiate this accident sequence. Therefore, in RAI 11.1-23 (Reference 17), the staff asked the applicant to identify the potential credible accident sequences that could result in the radiological maximum hypothetical accident (MHA). The staff asked the applicant to provide sufficient information to describe the initiating events and demonstrate that the consequences are calculated for both the credible unmitigated conditions (without SSCs) and mitigated conditions (with SSCs). Furthermore, in RAI 11.1-24, the staff requested that SHINE recalculate the MHA for both the worker and the public excluding mitigation, as well as justify the assumptions use to mitigate the MHA.

In response to RAI 11.1-23 (Reference 17), the applicant responded that they have identified a MHA consistent with the guidance provided in Parts 1 and 2 of NUREG-1537, and Parts 1 and 2 of the ISG augmenting NUREG-1537. The guidance on the MHA is primarily described in Chapter 13 of NUREG-1537 and Sections 13a2 and 13b of the ISG. In Section 13a2 of Part 1 of the ISG, it is stated that the MHA selected should bound all credible potential accidents at the facility and that the MHA may be a non-mechanistic failure assumed to establish outer limit consequence, but the scenario need not be entirely credible. In Section 13b.1.2 of Part 2 of the ISG, under the evaluation findings for the MHA, it is stated that the MHA is not considered a credible event for the facility. The applicant considers the rupture of five noble gas storage tanks simultaneously to not be an entirely credible event and is a means to establish an outer limit consequence. Therefore, the applicant did not identify potential credible accident sequences that could result in the radiological MHA. SHINE provided the mitigated dose consequences for the MHA in Subsection 13b.2.1.7 of the PSAR. The applicant did not calculate the MHA dose consequences for both the worker and the off-site public excluding mitigation because there is no regulatory requirement to do so. In addition, the SHINE response to RAI 13b.1-3 (Reference 25) provides a detailed accident sequence description for

the MHA, from the initiating event through the sequence's mitigated consequences. The staff finds this response adequately describes the MHA, and is therefore acceptable. Additional analysis of the MHA is provided in Chapter 13, "Accident Analysis," of this SER.

SHINE PSAR Section 13b.2.1.1, (page 13b-5) "Initial Conditions and Assumptions," identifies systems that are mitigative without designating them as safety-related structures, systems, and components. Therefore, in RAI 11.1-25 (Reference 17), the staff asked the applicant to designate all mitigative or preventive systems relied on as safety-related structures, systems, and components, and designate appropriate management measures. The staff asked the applicant to provide a commitment to evaluate all credible accidents under unmitigated conditions and implement safety-related SSCs, as applicable, and management measures to ensure intermediate and high consequence events comply with the performance requirements of 10 CFR 70.61 (or equivalent).

In response to RAI 11.1-25 (Reference 26), the applicant stated the SSCs which are required to mitigate the MHA described in PSAR Section 13b.2.1 to meet the dose requirements specified in 10 CFR 20 include RVZ1 (including isolation dampers), RVZ2, the structure and confinement seals of the noble gas shielded cell (as part of the confinement boundary), and the RAMS. As described in the response to RAI 13b.1-3, the SSCs SHINE credited to perform a preventative function are the process tanks and piping (i.e., the integrity of the NGRS storage tanks and interconnecting piping), and the administrative control credited with helping to prevent this event (i.e., Conduct of Operations Program). SHINE stated that safety-related SSCs and administrative controls required to prevent and mitigate the events are described in the response to RAI 13b.1-1 (Reference 21). The staff finds this response designates mitigative and preventive systems relied on as safety-related SSCs, and is therefore acceptable.

In summary, the applicant's PSAR and supplemental information provided in response to the RAI, provides sufficient information for the staff to determine that the proposed definitions for Unrestricted Areas, Restricted Areas, and Controlled Areas are appropriate and consistent with 10 CFR 20. The staff was also able to determine that the definition of Radiation Area and other area posting requirements contained in 10 CFR 20.1902 have been met. SHINE has committed to implement the requirements of Subpart G of 10 CFR 20 for HRAs and VHRAs that will be included in facility design.

The applicant has proposed an approach to the control of external exposures that includes a trigger point for investigating off-normal exposures at 25 percent of their administrative limit (10 percent of the occupational limits in Subpart C of 10 CFR 20). The investigation level thus becomes: 5 rem/yr x 10% x 25% = 125 mrem. The investigation process that is proposed by SHINE when this trigger point is reached should ensure that an adequate review process takes place and lessons-learned developed. The staff qualitatively determined that this investigative process was adequate.

Regarding internal exposure assessment, the applicant proposes to use a mixture of air sampling and bioassay determinations that are prescribed by 10 CFR 20.1204. The staff has determined that this process, coupled with the necessary sampling, monitoring, and analysis processes, should be adequate for quantification of internal exposure. The staff notes, however, that in order to implement the aspects of internal dose evaluations that are described in PSAR Sections 11.1.5.6.c – 11.1.5.6.e. Prior to issuing the operating license NRC approval is required as stated in 10 CFR 20.1204(c).

Additionally, the staff reviewed the support facilities (locker and change rooms, first aid area, and a personnel decontamination area) proposed by SHINE, which should be adequate for operational needs.

On the basis of its review, the staff has determined that the level of detail provided on radiation exposure control and dosimetry provisions, is adequate and supports the preliminary design and satisfies the applicable acceptance criteria of NUREG-1537, Part 2, Section 11.1.5, allowing the staff to make the following relevant findings: (1) program for posting and access control regarding Restricted Area, Controlled Area, and Unrestricted Area definitions, proposed access controls, and area radiological posting methodology is sufficient to meet the requirements of 10 CFR 20; (2) proposed dosimetry program meets the requirements of 10 CFR Part 20 and is acceptable, provided that prior NRC approval is received for internal dose evaluations that use the provisions of 10 CFR Part 20.1204(c); and (3) the provisions incorporated for locker and change rooms, a decontamination facility, and storage areas for radiation protection equipment and supplies, although discussed in conceptual terms, are considered acceptable for design purposes.

Therefore, the staff finds that the facility design features for radiation exposure control and dosimetry provisions meets the applicable regulatory requirements and guidance for issuance of a construction permit in accordance with 10 CFR 50.35 and 50.40. Further technical or design information required to complete the safety analysis may reasonably be left for later consideration.

11.4.6 Contamination Control

The staff evaluated the sufficiency of the radiation exposure control and dosimetry provisions, as described in SHINE PSAR Section 11.1.6, “Contamination Control Equipment and Facility Layout General Design Considerations for 10 CFR 20.1406,” using the guidance and acceptance criteria from Section 11.1.6, “Contamination Control,” of NUREG-1537, Part 2.

Consistent with the review criteria of NUREG-1537, Part 2, Section 11.1.6, the staff considered the elements of the contamination control program to ensure:

(1) The program scope demonstrates understanding of problems caused by radioactive contamination.

(2) Procedures will be established to prevent radioactive contamination.

(3) The bases of procedures show that routine monitoring of locations, equipment, and personnel for contamination will be established and maintained.

(4) Bases of procedures show that no materials, equipment, or personnel will be permitted to leave an area known to be or suspected of being contaminated without being appropriately monitored.

(5) Contamination control program includes provisions to avoid, prevent, and remedy the occurrence and the spread of contamination.

(6) Contamination control training is established as part of comprehensive radiation protection and radioactive waste management training, as needed.

(7) Contamination control program includes provisions for recordkeeping in accordance with 10 CFR Part 20 regarding occurrence and spread of contamination, sufficient in content and retention for cleanup of contamination, maintenance, and planning for eventual decommissioning of the facility.

The staff notes that the design features described in PSAR Section 11.1.6 emphasized containment of radioactive material and leak detection. Design features included in SHINE PSAR Section 11.1.3 included examples that would also assist in meeting the requirements of 10 CFR 20.1406. Specifically, PSAR Section 11.1.3 described features that: (1) allowed draining, flushing, and decontaminating equipment and piping; and (2) design of equipment to minimize the creation and buildup of radioactive material and to ease flushing of crud traps. The applicant proposed procedures to be used for contamination control and monitoring of personnel and equipment leaving the Restricted Area is consistent with industry practice and should enable an adequate contamination control program to be implemented. The staff has determined that the design features related to radioactive material containment and periodic decontamination when necessary, together with the proposed contamination control and monitoring program, are acceptable.

On the basis of its review, the staff has determined that the level of detail provided on contamination control satisfies the applicable acceptance criteria of NUREG 1537, Part 2, Section 11.1.6, allowing the staff to make the following relevant finding: the description and level of detail on the contamination control program will acceptably meet the requirements of 10 CFR 20.1406.

Therefore, the staff finds that the design of radiation monitoring and surveying provisions meets the applicable regulatory requirements and guidance for issuance of a construction permit in accordance with 10 CFR 50.35

11.4.7 Environmental Monitoring

The staff evaluated the sufficiency of the radiation exposure control and dosimetry provisions, as described in SHINE PSAR Section 11.1.7, “Environmental Monitoring,” using the guidance and acceptance criteria from Section 11.1.7, “Environmental Monitoring,” of NUREG-1537, Part 2 and the ISG Augmenting NUREG-1537, Part 2.

Consistent with the review criteria of NUREG-1537, Part 2, Section 11.1.7, the staff evaluated whether the PSAR section discussed the environmental quality commitments that the program should address and the standards that were used in development of the program. The staff reviewed the methods used to establish the preoperational baseline conditions. The staff performed a qualitative review to evaluate the sufficiency of the methods and techniques to sample and analyze the radiological effect of facility operation. The staff considered if the environmental monitoring program would be capable of detecting and assessing a significant radiological impact on the environment from the facility.

SHINE PSAR, Section 11.1.7.2.2.1, “Air Sampling Locations,” discusses the proposed air monitoring program. When discussing the equipment that will be used for air sampling, the applicant uses the term CAM (continuous air monitor). The conventional use of the term “continuous air monitor” denotes equipment that both samples and quantifies the activity on the sample media (i.e., real-time monitoring). Normally, CAMS are not used for such purposes and the NRC guidance document, NUREG-1301, “Offsite Dose Calculation Manual Guidance: Standard Radiological Effluent Controls for Pressurized Water Reactors” (Reference 90), that

the applicant cites, does not specify CAMs for environmental air sampling. Therefore, in RAI 11.1-6 (Reference 14), the staff asked the applicant to clarify whether the term “air monitoring” is intended to refer to sample collection followed by laboratory analysis or real-time air monitoring.

In response to RAI 11.1-6 (Reference 21), the applicant stated that it inappropriately used the term “CAM” to refer to a continuous air sampler in PSAR Subsection 11.1.7.2.2.1. SHINE will employ continuous air samplers at the stated locations, with the samples collected and analyzed in a laboratory. SHINE corrected the terminology in PSAR Subsection 11.1.7.2.2.1, Table 11.1-8, and Figure 11.1-3.

SHINE PSAR, Section 11.1.7.2.3, “Ingestion Pathway (Biota Monitoring),” discusses the proposed monitoring program for the ingestion pathway. This section notes that because radioiodine and particulate activity is not expected to be present in measureable quantities in effluent releases, biota sampling will only be included if certain conditions are met. These conditions include: (a) the presence of radioiodine or particulates on an environmental air sample, or (b) effluent releases of radioiodine or particulates that would result in a dose at the property line of 1 millirem/year or more. The PSAR also notes that dairy production takes places 0.5 miles from the facility and goat milk production occurs 0.7 miles from the facility. Given the presence of cow and goat milk production so close to the SHINE facility, it is apparent that routine milk sampling as part of the radiological environmental monitoring program is warranted because: (1) the proposed sampling of effluents and the environment may not result in timely recognition of an environmental impact issue if an off-normal release occurs in the beginning of a sample period (presumably a one-week interval), considering the remaining collection period and subsequent laboratory analysis; (2) milk, especially goat milk, is a more sensitive indicator of radioiodine impact on the environment; and (3) routine milk sampling could also demonstrate the adequacy of inplant controls. Beyond the regulatory requirements aspect, milk pathway sampling provides an opportunity to establish a relationship with neighboring dairies that can foster confidence in plant operations.

Therefore, in RAI 11.1-7 (Reference 14), the staff asked the applicant to provide additional information regarding exclusion of ingestion pathway monitoring and determine whether it is appropriate to add milk sampling to the radiological environmental monitoring program. This RAI was asked to satisfy the acceptance criteria of NUREG-1537, Part 2, Section 11.1.7, “Environmental Monitoring,” Acceptance Criteria, which states that “[t]he methods and techniques to sample and analyze the radiological effect of facility operation should be complete, applicable, and of sufficient validity that the environmental impact can be unambiguously assessed.”

In response to RAI 11.1-7 (Reference 20), the applicant determined it is appropriate to add routine milk sampling to the environmental monitoring program for a 5 year monitoring period. Continued sampling beyond the initial 5 year period will be determined based upon the results of the sampling program. The staff finds this response provides an appropriate method to sample and analyze the radiological effect of facility operation to meet the acceptance criteria in NUREG-1537, Part 2, Section 11.1.7.

The large number (40) of direct exposure monitoring stations (e.g., thermoluminescent dosimeter) recommended in NRC guidance documents for nuclear power plants is noted in SHINE PSAR, Section 11.1.7.2.1, “Direct Radiation Monitoring,” as well as a statement regarding why that number of monitoring stations does not appear warranted for the SHINE facility. As a result, the applicant proposed nine direct radiation-monitoring locations, based on

the smaller source term compared to nuclear power plants. Only four direct monitoring locations were proposed at the site boundary (north, east, south, and west). However, additional information was needed for the NRC staff to determine whether the number of direct monitoring locations should be based on source term alone or whether consideration should also be given to the variability of wind direction and the expected "signal-to-noise ratio" (plant contribution versus background). Additional direct monitoring stations would provide more statistical power to the analysis, enhancing the ability to monitor the impact on the environment from the SHINE facility. The staff notes that such a relatively small number of monitoring locations decreases the probability of detecting the impact of effluent releases associated with normal and off-normal operations, and accidents.

Therefore, in RAI 11.1-8 (Reference 14), the staff asked the applicant to provide additional information further justifying use of only four direct monitoring locations, or propose additional monitoring locations at the site boundary and special interest areas, such as population centers and nearby residences and schools.

In response to RAI 11.1-8 (Reference 20), SHINE proposed adding 15 direct radiation-monitoring stations to the 9 proposed in PSAR Subsection 11.1.7.2.1, for a total of 24 direct radiation-monitoring stations. The applicant stated PSAR Figure 11.1-3 and Table 11.1-8 will be updated in the FSAR to include the additional direct radiation-monitoring stations described above. Following the receipt of SHINE's FSAR, staff will confirm that SHINE has fulfilled this commitment.

The proposed Radiological Environmental Monitoring Program (REMP), as described in the PSAR and amended by the RAI responses cited above, is generally consistent with NRC guidance that includes the following (as principal examples):

- Regulatory Guide 4.1, "Radiological Environmental Monitoring For Nuclear Power Plants" (Reference 91).

- Regulatory Guide 4.15, "Quality Assurance for Radiological Monitoring Programs (Inception Through Normal Operations to License Termination)—Effluent Streams and the Environment (Reference 92).

- NUREG-1301, "Offsite Dose Calculation Manual Guidance: Standard Radiological Effluent Controls for Pressurized Water Reactors," (and the companion NUREG-1302 on the same subject for Boiling Water Reactors) (Reference 90).

The term "generally consistent" is used due to the fact that all of the above-cited references relate to the development and conduct of REMPs for nuclear power plants. As recognized by the applicant, many of the REMP elements had to be adjusted to be more applicable to SHINE's medical radioisotope production facility. The staff finds these adjustments, as noted in the above discussion, to be acceptable.

On the basis of its review, the staff has determined that the level of detail provided on environmental monitoring is adequate for the preliminary design and satisfies the applicable acceptance criteria of NUREG 1537, Part 2, Section 11.1.7, allowing the staff to make the following relevant findings: (1) the environmental monitoring program described is appropriate to the facility and its projected impact; and (2) the proposed REMP is consistent with the applicable portions of the aforementioned regulatory guidance.

Therefore, the staff finds that the design of environmental monitoring is sufficient and meets the applicable regulatory requirements and guidance for issuance of a construction permit in accordance with 10 CFR 50.35 and 50.40.

11.4.8 Radioactive Waste Management Program

The staff evaluated the sufficiency of the radioactive waste management program, as described in SHINE PSAR Section 11.2.1, "Radioactive Waste Management Program," using the guidance and acceptance criteria from Section 11.2.1, "Radioactive Waste Management Program," of NUREG-1537, Part 2 and the ISG Augmenting NUREG-1537, Part 2.

Consistent with the review criteria of NUREG-1537, Part 2, Section 11.2.1, the staff evaluated how the radioactive waste management program fits into the facility's overall management structure, how such wastes are identified and segregated effectively, how the waste management organization, with support from the radiation protection organization will ensure that radioactive wastes are continuously controlled from formation to ultimate safe disposal, and what organizational entities are assigned responsibilities in the radioactive waste management program.

The staff review of PSAR Section 11.2.1 included review of PSAR Chapter 12, "Conduct of Operations" to assure consistent integration, and review of applicable parts of Sections 9b to assure the systems design included features needed to sample waste streams to obtain the information required by the regulations.

The staff notes the introductory paragraph in PSAR Section 11.2 contains a commitment to comply with all applicable local and national regulations for managing radioactive wastes. This commitment was supplemented by SHINE's response to RAI 11.2-6, which provided a list of federal regulations and regulatory guidance to be followed by SHINE. The staff has determined that the waste management program described in SHINE PSAR Section 11.2.1 describes a sufficient administrative structure to assure releases of gaseous and solid wastes are in accordance with the regulations. The requirements contained in 10 CFR 20, Subpart K focus primarily on the information needed to adequately identify and characterize radioactive material for transportation and disposal. PSAR Section 9b.7.3.1.2 identifies sampling capabilities needed to obtain data required by the regulations. PSAR Section 11.2.1.3 assigns responsibilities to Waste Management/Operations Management for maintaining working knowledge of waste disposal requirements and for the procedures and processes needed to ship wastes for disposal.

PSAR Section 11.2.1 contains a commitment to develop an official charter describing the authority, duties, and responsibilities of personnel in the waste management organization for the FSAR. PSAR Chapter 12, Appendix 12 D commits to describing the Conduct of Operations program in the FSAR. Following the receipt of SHINE's FSAR, staff will confirm that this information has been provided.

SHINE PSAR Section 11.1.1.2 (page 11-4), "Liquid Radioactive Sources," indicates that solid waste will be sent to disposal facilities. However, the NRC staff determined that additional information was needed to determine the adequacy of SHINE's management of radioactive wastes. Therefore, in RAI 11.2-7 (Reference 17), the staff asked the applicant to provide additional information indicating that these disposal facilities will have appropriate licenses for managing radioactive wastes (i.e., licensed disposal facilities).

In response to RAI 11.2-7 (Reference 26), the applicant stated that the disposal facilities referred to in PSAR Subsection 11.1.1.2 will have appropriate licenses for managing radioactive waste (i.e., licensed disposal facilities). The staff finds this response adequately demonstrates a commitment to comply with applicable regulations for managing radioactive wastes, and is acceptable.

SHINE PSAR Sections 11.2.3.1, 11.2.3.2, and 11.2.3.3, describe the control of solid, liquid and gaseous waste streams. However, the NRC staff determined that additional information was needed to determine the adequacy of SHINE's control of waste streams. Therefore, in RAI 11.2-8 (Reference 17), the staff asked the applicant to provide a description of the survey or monitoring equipment [e.g., continuous air monitoring system (CAMS) and radiation area monitoring system (RAMS)] and program that will be used to ensure wastes remain in these designated controls/processes and identify any loss of control or unplanned releases.

In response to RAI 11.2-8 (Reference 26), the applicant stated that the CAMS equipment is described in PSAR Section 7a2.7.4.1, and the RAMS equipment is described in PSAR Section 7a2.7.4.2. SHINE stated that its RP Program will ensure wastes remain in these designated controls/processes, and identify any loss of control or unplanned releases. The staff finds this response provides an adequate description of how waste streams will be controlled. The staff will review SHINE's RP Program to verify SHINE's waste stream controls in the FSAR.

On the basis of its review, the staff has determined that the level of detail provided on the radioactive waste management program supports the preliminary design and satisfies the applicable acceptance criteria of NUREG 1537, Part 2, Section 11.2.1, allowing the staff to make the following relevant findings: (1) personnel will be appropriately structured to perform functions under the program in accordance with the requirements; and (2) facility systems are designed in a manner that will provide the capability to obtain the data needed to comply with the requirements.

Therefore, the staff finds that the radioactive waste management program meets the applicable regulatory requirements and guidance for issuance of a construction permit in accordance with 10 CFR 50.35 and 50.40. Further evaluation of the waste management program and its integration into the overall conduct of operations will occur following the receipt of the FSAR submitted with the operating license application.

11.4.9 Radioactive Waste Controls

The staff evaluated the sufficiency of the radiation exposure control and dosimetry provisions, as described in SHINE PSAR Section 11.2.2, "Radioactive Waste Controls," using the guidance and acceptance criteria from Section 11.2.2, "Radioactive Waste Controls," of NUREG-1537, Part 2 and the ISG Augmenting NUREG-1537, Part 2.

Consistent with the review criteria in NUREG-1537, Part 2, Section 11.1.5, the staff examined how all processes and procedures that could produce radioactive waste material will be evaluated. The staff considered whether appropriate monitoring and sampling will be performed and sufficient analyses will be completed to assess the extent of the radiation exposure from waste products. The staff reviewed whether the applicant sufficiently described methods to: (1) avoid inadvertent exposure of personnel or uncontrolled escape of the radioactive materials; (2) define and maintain continuous control of radioactive materials that require treatment and management as waste; and (3) reduce the quantities of radioactive waste.

The staff notes the purpose of the SHINE facility is to produce Mo-99 by fissioning uranium in a liquid uranium sulfate solution and extracting Mo-99 from the resulting fission products. Because both the volume and the radioactivity content of fission products, other than Mo-99, far exceeds that of the Mo-99 product, waste management activities and control are an important aspects of the overall operation. Regarding waste minimization, review of PSAR Section 11.2.1 confirms that waste minimization programmatic efforts are part of annual audits of the waste management program. The staff reviewed the description of the waste streams presented in SHINE PSAR Section 11.2.2.2 and the evaluations contained therein identifying the required capabilities for adequate packaging of the wastes for transportation and disposal. The evaluations of the systems generating these waste streams and processing them through packaging are presented in SER Chapters 4 and 9.

The Mo-99 extraction columns are a frequent (400 target solution volumes per year) and initially highly radioactive solid waste generated by the proposed SHINE facility. As a supplement to material presented in SHINE PSAR, Section 9b.7.2, "RCA Material Handling," and Section 11.2, "Radioactive Waste Management," additional information is needed on criteria for the handling of this waste stream and the handling of the extraction column in and from the supercells to the shielded vaults and further to packaging and shipping for disposal. This information is needed for the NRC staff to ascertain SHINE's ability to meet the regulatory requirements regarding hazardous material identification in shipping papers (10 CFR Part 20, Subpart K, "Waste Disposal"), and conformance with ALARA goals.

Therefore, in RAI 11.2-1 (Reference 14), the staff asked the applicant to provide the following information so that staff could assess compliance with the ALARA requirement of 10 CFR Part 20:

(a) Describe the inlet and outlet connections of the Mo-99 columns that permit frequent remote replacement while providing leak-tightness and preventing the spread of contamination during replacement. Provide the estimated dose rate from an extraction column at time of removal and after 2 weeks storage in the supercell;

(b) Provide information on the material handling methods of moving shielded containers of an extraction column from the supercell to the shielded vaults at the other end of the facility from the supercells. If this material handling includes movement by crane, include a load drop in the accident analyses or justify why such an event need not be considered;

(c) Clarify how long extraction columns are maintained in shielded vault storage. SHINE PSAR, Table 11.2-3, "Waste Methodology for Columns," says approximately 400 days of decay are required to be Class A; PSAR, Section 9b.7.5.4.2, "Solid Radioactive Waste Handling Hot Cell," says they are transferred to the storage vault for an additional 6 months.;

(d) Provide information on the transfer of an extraction column into one of the six separate shielded storage vaults shown on figures presented in SHINE PSAR, Chapter 1, "The Facility"; and,

(e) Clarify, whether there are any differences between the handling of the Mo-99 columns.

In response to RAI 11.2-1(a) (Reference 21), the applicant stated that:

> The inlet and outlet connectors are a quick-disconnect style specifically designed for use with remote manipulators in hot cell environments. Radiation and wear-

> resistant seals provide leak tightness. Automatic valves built into the connectors close when the connector is separated, which significantly reduces the leakage of contaminated fluids from the process lines and columns. As the target solution is washed from the extraction column (by an acid wash, water wash, and strip solution) prior to the column being removed, there will be significantly lower levels of contamination present in the column and lines during disconnection than during extraction steps. Means will be provided to capture the small leakage of liquid that will occur during the disconnection of the connectors. The estimated dose rate for an extraction column at the time of removal is approximately 6,700 rem/hr at 3 feet unshielded. The peak dose rate drops to approximately 340 rem/hr at 3 feet unshielded after 2 weeks of storage in the supercell.

In response to RAI 11.2-1(b) (Reference 21), the applicant stated that:

> The material handling methods involved in the transfer of an extraction column from the supercell to the shielded vaults are described in Part d of the SHINE Response to this RAI.

The applicant stated that they will ensure safe load handling guidance is applied to the movement, as described in the SHINE Response to RAI 9b.7-1.

In response to RAI 11.2-1(c) (Reference 21), the applicant stated that:

> Following storage in the supercell for no less than two weeks after use, the extraction columns will be maintained in shielded vault storage for approximately six months. The columns will then be transferred to the solid radioactive waste handling hot cell for packaging in approved containers. The containers will be transferred to the Waste Staging and Shipping Building for storage until they reach the requirements for Class A waste and can be shipped for disposal. Preliminary calculations indicate that a total decay time of approximately 400 days will be needed for the columns to reach the requirements for Class A waste. At least two weeks of this time will be spent in the supercell, approximately six months in shielded vaults, and the remaining time (approximately 200 days) will be spent in the Waste Staging and Shipping Building.

In response to RAI 11.2-1(e), the applicant stated that it plans to perform the following steps for the transfer of an extraction column from a supercell to a shielded storage vault:

> After removing an extraction column from the process, it is decayed for a minimum of two weeks in the supercell on a decay storage rack. Several extraction columns that have decayed for a minimum of two weeks are planned to be transported out of the cell in one transfer to reduce personnel exposure and the number of transfer operations. The number of extraction columns transferred will be limited based on transfer container capacity. The transfer container will be shielded to ensure personnel doses are maintained ALARA and within procedural limits during the transfer.
>
> When several extraction columns are to be transferred, a transfer container will be placed on a transfer cart. The radiation levels in the supercell will be checked to ensure they are below procedural limits that permit opening the supercell shield door. The shield door, which opens to the lower section of the extraction

cell, will then be opened. The transfer cart will be moved into the extraction area of the supercell. The transfer container will then be raised to the transfer system hatch and sealed to reduce the potential for contamination of the lower section of the extraction cell.

The supercell shield door will then be closed, and the hatch will be opened. The supercell manipulators will be used to move several extraction columns to the transfer container and the hatch will be closed. The radiation levels in the supercell will be checked to ensure they are below procedural limits that permit opening the supercell shield door. The shield door will be opened, and the transfer container will be detached and lowered from the hatch. The transfer cart will then be removed from the supercell and the shield door will be closed. Before leaving the contaminated area boundary, the transfer cart and the exterior surfaces of the transfer container will be checked to ensure surface contamination is below procedural limits. If contamination is found, the transfer container and cart will be decontaminated in accordance with health physics procedures before being released.

The transfer cart will then be moved to the shielded storage vault. Any checks required prior to removing the storage vault shield plug, such as radiation level, will be made and verified within procedural limits. The overhead crane will then be used to remove the shield plug. An engineered lifting device will then be used to lower the shielded container into the shielded cell.

The overhead crane will then be used to replace the shielded storage vault shield plug, and the transfer cart will be returned to its storage location.

In response to RAI 11.2-1(d), the applicant stated that all of the columns will be handled in the same manner, namely: (1) stored in the supercell for no less than 2 weeks after use; (2) transferred to the storage vault for additional decay time, currently planned for 6 months; (3) transferred to the solid radioactive waste handling hot cell in approved containers; and (4) transferred to the waste staging and shipping building prior to being shipped offsite.

The staff finds the information in the PSAR as supplemented by this response, complies with the requirements in 10 CFR Part 20, Subpart K and is consistent with SHINE's commitment to ALARA and demonstrates an adequate methodology for a preliminary design. The staff will confirm that the final design conforms to this design basis during the evaluation of SHINE's FSAR.

SHINE PSAR, Section 4b.4.1.1.4.1, "Uranyl Nitrate Preparation Process Sequence," explains part of the process for reusing target solution and states that the solid salts discharged from the centrifuge are moved to solid radioactive waste packaging in a 55-gallon drum. PSAR, Section 11.2.2.2.6, "Target Solution Clean-up," identifies that this waste stream is Class B. There is no discussion of the radiation levels emanating from these drums, no discussion of sealing the drums during handling to prevent spills, and no discussion of design features implemented to assure doses to workers are ALARA during these evolutions. PSAR, Table 11.2-6, "Waste Methodology for [ ]" (the rest of the table name is withheld as proprietary information), identifies that the waste stream must be sampled for waste characterization prior to solidification, but there is no discussion of how this is accomplished in an ALARA manner.

Therefore, in RAI 11.2-2 (Reference 14), the staff asked the applicant to provide discussion of the design features and design review procedures used to assure that the ALARA considerations committed to in SHINE PSAR, Section 11.1.3, “ALARA Program,” are effectively implemented for each of the identified waste streams and the handling operations required during their processing.

In response to 11.2-2 (Reference 21), the applicant stated that PSAR Subsection 11.1.2.1 discusses SHINE’s commitment to the implementation of an ALARA program. The applicant also provided the preliminary design features of the Uranyl Nitrate Preparation (UNP) waste streams. The applicant also stated they will more fully specify waste handling for the UNP subsystem with respect to design features used to assure that ALARA considerations are effectively implemented during detailed design, and provide those details in the FSAR. An IMR has been initiated to track the inclusion of this information in the FSAR. Further, the applicant states that while the SRWP system design has not been finalized, the design of the radiation shielding for tanks, walls, hot cells, and the drums will ensure the dose rates are within the regulatory limits of 10 CFR 20.1201 and 10 CFR 20.1301, and that the dose rates in normally occupied areas meet (to the extent practicable) the facility goal of 0.25 mrem/hr. These design features will also ensure that ALARA objectives to minimize exposure to facility workers during waste handling and transfer operations are met. Radiation monitors will be located at operations areas to detect and warn of changes in radiation levels. A design review of the final SRWP system design will be performed to ensure that transfer and processing of the sulfate sludge will be done in an ALARA manner. The design review will be proceduralized, and these procedures will evaluate general design considerations and methods to maintain radiation exposures ALARA consistent with the recommendations of Regulatory Guide 8.8. Following the receipt of SHINE’s FSAR, staff will confirm that these issues have been resolved.

The staff finds this response demonstrates an adequate methodology for a preliminary design. The staff will confirm that the final design conforms to this design basis during the evaluation of SHINE’s FSAR.

The staff identified some errors and inconsistencies regarding liquid waste quantities and generation in Tables 11.2-1 and 11.2-5 and, in RAIs 11.2-3 and 11.2-4 (Reference 14), asked the applicant to correct or justify the inconsistent values. In response to RAI 11.2-3 and 11.2-4, the applicant committed to revise Tables 9b.7-7, 11.2-1 and 11.2-5 with corrected values. Additionally, the applicant provided a liquid waste process flow diagram and discussed the liquid waste streams. SHINE has since updated the PSAR with a revised tables. The staff finds these responses demonstrate an adequate methodology for a preliminary design. The staff will confirm that the final design conforms to this design basis during the evaluation of SHINE’s FSAR.

SHINE PSAR Chapter 11 states that disposal sites have established waste acceptance criteria. The inputs to the consolidated radioactive liquid waste tanks are a mixture of strong acids and bases, chemicals in solution, and water, all containing fission products. This chemical mixture is then concentrated through evaporation to reduce the volume of waste to be solidified for packaging and disposal. In RAI 11.2-5 (Reference 14), the staff asked the applicant to provide references that support the validity of the assumption that the evaporator concentrates of the consolidated liquid waste stream can be solidified on Portland cement to meet the waste acceptance criteria of the potential disposal sites.

In response to RAI 11.2-5 (Reference 26), the applicant stated that it plans to adjust the pH of the consolidated radioactive liquid waste prior to evaporation and solidification using Portland

cement as the solidification agent. As discussed in SHINE's RAI response, the Electric Power Research Institute (EPRI) has addressed the issue of cement solidification in Topical Report NP-2900. Table F-1 of EPRI NP-2900 presents the type and amount of solidification agent to be used with various types of waste streams found in the nuclear power industry. The table specifically addresses the use of Portland cement as a solidification agent and addresses solidification of sodium sulfate waste streams which typically are generated by the neutralization of sodium hydroxide with sulfuric acid prior to solidification. Appendix D of EPRI NP-2900 discusses leach rate tests of solidified waste. Appendix D provides significant data on leach rate tests of cement solidified sodium sulfate waste streams. Figure 1 of Appendix D indicates that if the weight percent of sodium sulfate in the solidified waste is eight weight percent or less, then leaching is in compliance with federal regulations, even for samples immersed in water. The applicant stated that the facility design is for waste streams with low concentrations of solid species that are below eight weight percent, as shown in the modified Table 9b.7-7 provided in the SHINE Response to RAI 11.2-4. Even after a volume reduction factor of 1.5, the contents of species other than water are not expected to exceed eight weight percent. Therefore, the applicant anticipates that the solidification process with cement will be successful and meet the acceptance criteria of potential waste disposal sites. SHINE will use the guidance included in EPRI NP-2900 in detailed design and in developing facility operating procedures for pre-treatment and cement solidification of liquid radwaste. SHINE's operating procedures will implement the requirements of the facility solidification Process Control Program (PCP). SHINE will perform solidification demonstration test runs using non-licensed materials during facility commissioning.

The staff finds this response supports the validity of the assumption that the evaporator concentrates of the consolidated liquid waste stream can be solidified on Portland cement to meet the waste acceptance criteria of the potential disposal sites, and is therefore acceptable.

The staff notes that descriptions of the plans and procedures to provide reasonable assurance that radioactive wastes will be controlled at all times in a manner that protects the environment and the health and safety of the facility staff and the public will be presented in the FSAR. The staff finds this can reasonably be left for later consideration when it will be supplied in the FSAR.

On the basis of its review, the staff has determined that the level of detail provided on the radioactive waste controls satisfies the applicable acceptance criteria of NUREG 1537, Part 2, Section 11.2.2, allowing the staff to make the following relevant findings: (1) appropriate controls are described for radioactive waste management on the waste streams and products designed to prevent uncontrolled exposures or escape of radioactive waste; and (2) the applicant has described programmatic measures to evaluate the generation of radioactive wastes at the facility to define actions to maintain and control waste generation.

Therefore, the staff finds that the design of radioactive waste controls meets the applicable regulatory requirements and guidance for issuance of a construction permit in accordance with 10 CFR 50.35 and 50.40. Further evaluation of the radioactive waste controls plans and procedures will occur following the receipt of the FSAR submitted with the operating license application.

11.4.10 Release of Radioactive Waste

The staff evaluated the sufficiency of the radioactive effluents, as described in SHINE PSAR Section 11.2.3, "Release of Radioactive Waste," using the guidance and acceptance criteria

from Section 11.2.3, “Release of Radioactive Waste,” of NUREG-1537, Part 2 and the ISG Augmenting NUREG-1537, Part 2.

Consistent with the review criteria of NUREG-1537, Part 2, Section 11.2.3, the staff evaluated the discussions on radioactive effluents for compliance with the regulations in Subpart K of 10 CFR Part 20.

The staff notes the evaluation of the adequacy of controls on gaseous releases is presented in SER Section 11.4.4 and Section 11.4.7. According to PSAR Section 11.2.3, there will be no liquids containing radioactive effluents discharged to the sanitary sewer. Further, several liquid waste streams will be solidified on-site to meet shipping and waste acceptance criteria.

The applicant has identified the requirements for adequate packaging of solid wastes for disposal and has committed to comply with 10 CFR 20, Subpart K and the waste acceptance criteria for the potential waste disposal sites. The description of procedures to be implemented to assure compliance with the requirements will be discussed in the FSAR. Review of the tables in PSAR Section 11.2 reveals acknowledgement of the requirements for waste characterization. Review of the system designs and capabilities for sampling necessary for waste characterization is presented in SER Section 9b4.7.

On the basis of its review, the staff has determined that the level of detail provided on the release of radioactive waste supports the preliminary design and satisfies the applicable acceptance criteria of NUREG 1537, Part 2, Section 11.2.3, allowing the staff to make the following relevant findings: (1) radionuclides have been sufficiently identified by quantities, other relevant characteristics, release points, and relevant environmental parameters; and (2) releases of radioactive effluents will likely be sufficiently be managed, controlled, and monitored so that limits in applicable regulations would not be exceeded.

Therefore, the staff finds that the design for release of radioactive waste is sufficient and meets the applicable regulatory requirements and guidance for issuance of a construction permit in accordance with 10 CFR 50.35 and 50.40. Further evaluation of the release of radioactive waste procedures will occur following the receipt of the FSAR submitted with the operating license application.

11.4.11 Respiratory Protection Program

The staff evaluated the sufficiency of the respiratory protection program, as described in SHINE PSAR Section 11.3, “Respiratory Protection Program,” using the guidance and acceptance criteria from Section 11.3, “Respiratory Protection Program,” of the ISG Augmenting NUREG-1537, Part 2.

Consistent with the review criteria in NUREG-1537, Part 2, Section 11.3, the staff examined whether the respiratory protection program provides adequate protection of personnel from airborne concentrations exceeding the limits of Appendix B to 10 CFR Part 20. The staff reviewed the proposed radiation protection equipment for providing the appropriate degree of personal protection. The staff evaluated the description of respirator selection, training, fit testing, storage, maintenance, repair, and quality assurance.

The staff notes the respiratory protection program proposed by SHINE is consistent with the hierarchy of protection intended by Subpart H of 10 CFR 20, (i.e., HVAC system considerations first, followed by the use of respiratory protective equipment) only when HVAC controls are not

practical or are ineffective. The applicant stated that only NIOSH-certified respiratory equipment will be used and that written procedures will be prepared for all key program elements. The program will include a review by a physician to certify that an individual is medically fit to wear respiratory protective equipment and that quantitative fit testing will be performed. Regarding respirator quantitative fit testing, PSAR Section 11.3 states that "…a minimum fit factor of at least 10 times the … assigned protection factor (APF) for negative pressure devices, and….at least 500 times the APF for any positive pressure, continuous flow, and pressure-demand devices…" Because the APF is typically 1000 for the latter devices, to require demonstration of a fit APF of 500,000 (i.e., 500 x 1000) may be beyond the capabilities of most quantitative fit testing methods. Prior to issuing the operating license, this matter needs to be reviewed in light of the guidance contained in Regulatory Guide 8.15, "Acceptable Programs for Respiratory Protection" (Reference 98), and related documents and appropriate clarification included in the FSAR.

PSAR Section 9a2.1.1 indicates that air which passes from radiation controlled area ventilation Zone 2 (RVZ2) to radiation controlled ventilation Zone 1 (RVZ1) is first passed through HEPA filtration. This implies that the zones are isolated from each other and that air is filtered between each zone. Therefore, in RAI 11.3-1 (Reference 17), the staff asked the applicant to provide additional information to clarify whether each zone can be isolated from the other zones automatically using the automatic isolation dampers and whether the air is filtered between each zone.

In response to RAI 11.3-1 (Reference 26), the applicant stated that RVZ1 areas draw supply air from adjacent RVZ2 spaces. RVZ1 area air inlets are equipped with automatic isolation dampers (fail closed), manual isolation dampers, and non-credited HEPA filters. The air inlet HEPA filter ensures that if an RVZ1 area were to see a flow reversal, the air stream would be filtered. Should high radiation levels be detected within an RVZ1 area, ESFAS (IF) or RICS (RPF) would generate a confinement isolation signal, closing the corresponding bubble-tight isolation dampers on the air inlet and exhaust outlet for each affected RVZ1 area. SHINE states that this automatic isolation provides isolation between the affected RVZ1 area and the adjacent RVZ2 space. Confinement barrier penetrations are sealed, as necessary, to reduce leakage. However, SHINE expects some leakage between zones even after the isolation described above, and potential leakage is accounted for in safety analysis calculations, as described in PSAR Chapter 13. RVZ1 exhaust can also be isolated downstream of the filter trains on high radiation levels in RVZ1. SHINE states that this point of RVZ1 isolation does not isolate RVZ1 from the other zones; however, it provides an additional means to reduce releases to the environment. Also, should high radiation levels be detected within RVZ2, RICS would generate a signal for confinement isolation at the RCA boundary, which would close bubble-tight isolation dampers in the supply duct at the RCA boundary and in the RVZ2 exhaust duct downstream of the final filters. SHINE states that this automatic isolation does not isolate RVZ2 from other zones directly; however, it would reduce the potential releases to the environment. SHINE states that there are no automatic isolations necessary or provided for RVZ3 or FVZ4.

The staff finds this response clarifies whether each zone can be isolated from the other zones automatically using the automatic isolation dampers and whether the air is filtered between each zone to meet the acceptance criteria of the ISG Augmenting NUREG-1537, Section 11.3.

SHINE PSAR Section 9a2.1.1 (page 9a2-2) indicates that the ventilation air in the exhaust header is tested before being exhausted to the stack. However, the NRC staff determined that additional information was needed to determine the adequacy of the ventilation system at the SHINE facility. Therefore, in RAI 11.3-2 (Reference 17), the staff asked the applicant to provide

additional information to demonstrate that the tests will verify some pre-defined differential pressure gradient across the filters and measure the level of contamination following the filters.

In response to RAI 11.3-2 (Reference 26), the applicant referenced PSAR Section 9a2.1.1, which states that the exhaust from the cells collects in an RVZ1 system duct header and then draws through final, testable, HEPA filters and carbon adsorbers prior to discharge into the exhaust stack. SHINE PSAR Section 9a2.1.1 also that states that the exhaust air collects in an RVZ2 exhaust header and then draws through final, testable, HEPA filters and carbon adsorbers prior to discharge into the exhaust stack.

SHINE clarified that PSAR Section 9a2.1.1 states that HEPA filters and carbon adsorbers are testable, not that ventilation air in the exhaust header is tested before being exhausted to the stack. SHINE stated that it will test the pressure differential across HEPA filters and decontamination efficiencies of carbon adsorbers to ensure adequate operation and minimize the potential for contamination downstream of the exhaust filter housings. SHINE also indicated it will ensure differential pressure instruments are installed to allow for filter monitoring. SHINE's operators will periodically monitor differential pressure and compare the measurement to a pre-defined allowed pressure gradient. If monitoring or testing indicate filter or charcoal adsorber replacement is necessary, SHINE will initiate an IMR to ensure corrective actions are taken (e.g., filter replacement).

The staff finds this response describes the tests SHINE will perform to verify the differential pressure gradient across the filters and measure the level of contamination following the filters, and is therefore acceptable.

SHINE PSAR Section 9a2.1.1 (page 9a2-3) states that fume hood exhaust ducts are controlled automatically to compensate for changes in pressure drops for loading of filters. However, the NRC staff determined that additional information was needed to determine the adequacy of the ventilation system at the SHINE facility. Therefore, in RAI 11.3-3 (Reference 17), the staff asked the applicant to justify that an acceptable differential pressure will be maintained across facility air filters.

In response to RAI 11.3-3 (Reference 26), the applicant stated that it will monitor fume hood exhaust for adequate airflow consistent with the ventilation survey guidance provided in Regulatory Guide 8.24 (Reference 83). If monitoring indicates deficient airflow, SHINE will initiate an IMR for corrective action (e.g., filter replacement). SHINE will include the requirements for monitoring in its RP Program. The staff finds this response commits to an acceptable approach to maintaining differential pressure across facility air filters, and is therefore acceptable.

SHINE PSAR Sections 9a2.1.1 and 11.3, "Respiratory Protection Program," do not provide the minimum flow velocity at openings, maximum differential pressure across filters, or types of filters to be used. Therefore, in RAI 11.3-4 (Reference 17), the staff asked the applicant to describe the criteria for the ventilation and containment systems, including minimum flow velocity at openings in these systems, maximum differential pressure across filters, and types of filters to be used.

In response to RAI 11.3-4 (Reference 26), the applicant stated that the facility does not have a containment feature, but uses confinement to minimize the release and spread of radioactive contamination. The design basis for confinement is described in PSAR Section 6a2.2.1. The applicant added that it will follow the ventilation survey guidance in Regulatory Guide 8.24 for

fume hood and glovebox operations and maintenance involving uranium-235 processing. This guidance includes monthly surveys to determine that airflow velocities in hoods preclude the escape of airborne uranium and to minimize potential intake by workers, as well as surveys of negative pressure maintained in gloveboxes. SHINE will provide the specific criteria for the ventilation systems, including minimum flow velocity at openings in these systems, maximum differential pressure across filters, and types of filters to be used will be determined in the FSAR. SHINE has initiated an IMR to track inclusion of this information in the FSAR. The staff finds this response adequately describe the criteria for the ventilation and containment systems for construction, and is therefore acceptable.

On the basis of its review, the staff has determined that SHINE has committed to an acceptable radiation protection program that includes a program to control airborne concentration of radioactive material with engineering controls and respiratory protection. The level of detail provided on the respiratory protection program satisfies the applicable acceptance criteria of the ISG Augmenting NUREG-1537, Part 2, Section 11.2.2, allowing the staff to make the following relevant finding: the program is generally consistent (given the level of detail available at the facility design stage) with Regulatory Guide 8.15 and Subpart H and Appendix A of 10 CFR Part 20.

Therefore, the staff finds that the design of respiratory protection program meets the applicable regulatory requirements and guidance for issuance of a construction permit in accordance with 10 CFR 50.35 and 50.40. Further evaluation of the respiratory protection program and quantitative fit testing will occur following the receipt of the FSAR submitted with the operating license application.

11.4.12 Probable Subjects of Technical Specifications

In accordance with 10 CFR 50.34(a)(5), the staff evaluated the sufficiency of the applicant's identification and justification for the selection of those variables, conditions, or other items which are determined to be probable subjects of technical specifications for the radiation protection program and waste management provisions, with special attention given to those items which may significantly influence the final design.

Based on the information provided in Table 14a2-1 of the SHINE PSAR, the staff finds that identification and justification of the proposed conditions related to radiation protection or waste management (e.g., LCOs for the Radiation Monitoring Systems and Effluents, conditions related to design features of the noble gas decay tank storage cell) are sufficient and meet the applicable regulatory requirements for the issuance of construction permit in accordance with 10 CFR 50.35. A detailed evaluation of technical specifications, including LCOs and surveillance requirements, will be performed during the review of SHINE's operating license application.

11.5 Summary and Conclusions

The staff evaluated the descriptions and discussions of the SHINE facility radiation protection program and waste management provisions, as described in PSAR Chapter 11 and supplemented by the applicant's responses to RAIs, and finds that the preliminary design criteria of the radiation protection program and waste management provisions, including the principal design criteria, design bases, and information relative to materials of construction, general arrangement, and approximate dimensions: (1) provides reasonable assurance that the final design will conform to the design basis, and (2) meets all applicable regulatory

requirements and acceptance criteria discussed in NUREG-1537 and the ISG augmenting NUREG-1537. Based on these findings, the staff has made the following conclusions regarding issuance of a construction permit in accordance with 10 CFR 50.35 and 10 CFR 50.40:

(1) SHINE has described the proposed facility design criteria for radiation protection and waste management, including, but not limited to, the principal architectural and engineering criteria for the design, and has identified the major features or components incorporated therein for the protection of the health and safety of the public.

(2) Further technical or design information required to complete the safety analysis of the radiation protection program and waste management provisions may reasonably be left for later consideration the FSAR.

(3) There is reasonable assurance that, taking into consideration the site criteria contained in 10 CFR Part 100, the proposed facility can be constructed and operated at the proposed location without undue risk to the health and safety of the public.

(4) There is reasonable assurance: (i) that the construction of the SHINE facility will not endanger the health and safety of the public, and (ii) that construction activities can be conducted in compliance with the Commission's regulations.

(5) The issuance of a permit for the construction of the facility would not be inimical to the common defense and security or to the health and safety of the public.

12.0 CONDUCT OF OPERATIONS

The conduct of operations involves the administrative aspects of facility operation, the organizational structure, the functional responsibilities, levels of authority, and interface for establishing, executing, and verifying the organizational structure, staffing, and selection and training of personnel.

This chapter of the SHINE construction permit safety evaluation report (SER) describes the review and evaluation of the U.S. Nuclear Regulatory commission (NRC) staff (the staff) of the preliminary design of the SHINE conduct of operations as presented in Chapter 12, "Conduct of Operations," of the SHINE PSAR, as supplemented by the applicant's response to requests for additional information (RAIs).

12.1 Areas of Review

SHINE PSAR Chapter 12 describes the conduct of operations for the IUs and RPF; therefore, the areas of review related to conduct of operations presented in this section are applicable to both the IUs and RPF.

The staff reviewed SHINE PSAR Chapter 12 against applicable regulatory requirements using regulatory guidance and standards to assess the sufficiency of the preliminary design of the SHINE conduct of operations program. The following sections of the SER describe the areas reviewed as specified in NUREG-1537, Part 2, and the ISG Augmenting NUREG-1537, Part 2.

Section 12.4.1, "Organization," provides an evaluation of the SHINE organizational structure. Within this review area, the staff assessed the organizational structure, responsibilities of individuals and groups, staffing for reactor operations, selection and training of personnel, organizational aspects of radiation protection, and radioisotope production facility safety program.

Section 12.4.2, "Review and Audit Activities," provides an evaluation of the SHINE composition and qualification of the SHINE committee members, charter and rules of the committees, conduct of the review functions, and conduct of the audit functions.

Section 12.4.3, "Procedures", provides an evaluation of the SHINE procedures, and procedural controls, to include the minimum topics for which procedures are required, the process for the review and approval of procedures, and the process for making substantive, minor, and temporary changes to procedures.

Section 12.4.4, "Required Actions," usually provides an evaluation on actions to be taken after a reportable event or a violation of the facility safety limits; however, as this subject is specific to operations of the facility, the applicant has deferred submittal of this section until the FSAR.

Section 12.4.5, "Reports," usually provides an evaluation on the submission of timely information to the NRC in the form of annual reports and special reports (e.g., reportable events, violations of safety limits, changes in key personnel, changes in transient or accident analysis); however, as this subject is specific to operations of the facility, the applicant has deferred submittal of this section until the FSAR.

Section 12.4.6, “Records,” usually provides an evaluation on facility records, including review and retention guidelines; however, as this subject is specific to operations of the facility, the applicant has deferred submittal of this section until the FSAR.

Section 12.4.7, “Emergency Planning,” provides an evaluation of the SHINE Preliminary Emergency Plan. The Preliminary Emergency Plan discusses those necessary provisions for coping with radiological emergencies and minimizing the consequences of accidents at facilities. The staff evaluation included the review of plans, design features, facilities, functions, and equipment necessary to address the provisions for coping with radiological emergencies at the facility.

Section 12.4.8, “Security Planning,” usually provides an evaluation of the SHINE Physical Security Plan; however, the applicant since security planning is not required until the submission of a FSAR per 10 CFR 50.34(b), SHINE has deferred submittal of this section.

Section 12.4.9, “Quality Assurance,” provides an evaluation of the SHINE quality assurance program to be applied to the design, fabrication, construction, and testing of the structures, systems, and components of the facility.

Section 12.4.10, “Operator Training and Requalification,” usually provides an evaluation of the operator training and requalification plan; however, as this subject is specific to operations of the facility, the applicant has deferred submittal of this section until the FSAR.

Section 12.4.11, “Startup Plan,” usually provides an evaluation of the proposed tests to determine operability and the timing of a report that summarizes the results of the startup tests; however, as this subject is specific to operations of the facility, the applicant has deferred submittal of this section until the FSAR.

Section 12.4.12, “Environmental Reports,” has been superseded by Chapter 19, “Environmental Review.” As such, the staff’s evaluation of SHINE’s environmental report was not within the scope of this chapter of the SER. The staff’s evaluation of SHINE’s environmental report, submitted as Chapter 19, “Environmental Review,” of the SHINE PSAR, is documented in NUREG-2183, “Environmental Impact Statement for the Construction Permit for the SHINE Medical Radioisotope Production Facility.”

Section 12.4.13, “Material Control and Accounting Plan,” usually provides an evaluation of the proposed material control and accounting (MC&A) plan; however, as this subject is specific to operations of the facility, the applicant has deferred submittal of this section until the FSAR.

12.2 Summary of Application

SHINE PSAR Section 12.1, “Organization,” describes the organizational structure, functional responsibilities, levels of authority, and interfaces for establishing, executing, and verifying the organizational structure. The organizational structure includes internal and external functions for SHINE, including interface responsibilities for multiple organizations.

SHINE PSAR Section 12.2, “Review and Audit Activities,” discusses review and audit activities. The Plant Manager is responsible to establish review and audit committees and ensures that the appropriate technical expertise is available for review and audit activities. These activities are summarized and reported to Executive Management. Independent audits of the SHINE facility are conducted periodically.

SHINE PSAR Section 12.3, “Procedures,” provides a description of the operating procedures. Operating procedures provide appropriate direction to ensure that the facility is operated normally within its design basis, and in compliance with technical specifications. Operating procedures are written, reviewed, and approved by appropriate management, as well as controlled and monitored to ensure that the content is technically correct and the wording and format are clear and concise. The SHINE policy on use of procedures is documented. The extent of detail in a procedure is dependent on the complexity of the task; the experience, education, and training of the users; and the potential significance of the consequences of error. The process for making changes and revisions to procedures is documented. A controlled copy of all operations procedures is maintained in the control room or equivalent area. Activities and tasks are performed consistent with approved implementing procedures.

SHINE PSAR Sections 12.4, “Required Actions,” 12.5, “Reports,” 12.6, “Records,” Section 12.8, “Security Planning,” 12.10, “Operator Training and Requalification,” 12.11, “Startup Plan,” and 12.13, “Material Control and Accountability Program,” are specific to operations of the facility, and as such, the applicant has deferred submittal of this information until the FSAR.

SHINE PSAR Section 12.7, “Emergency Planning,” consists of the SHINE Preliminary Emergency Plan, Revision 0, which describes the necessary provisions that are established for coping with radiological emergencies and minimizing the consequences of accidents at the facility. The SHINE Emergency Response Organization (ERO) is defined, including the roles, responsibilities and interfaces with other organizations. The emergency classification system describes the classifications based on a range of events described in SHINE PSAR Chapter 13. The emergency action levels provide specific parameters that are intended to activate appropriate portions of the SHINE ERO and initiate protective actions for an event. The plan also discusses whether any radiological emergencies would necessitate establishing an Emergency Planning Zone (EPZ). A general discussion is provided on the organizational response to emergencies. An overview is provided on emergency facilities and equipment necessary to respond to emergencies. Additionally, actions needed to restore the facility to a safe condition following emergency conditions are discussed.

SHINE PSAR Section 12.9, “Quality Assurance,” provides a description of the quality assurance (QA) program to be applied to the design, fabrication, construction, and testing of the structures, systems, and components of the facility. The applicant provided the SHINE Quality Assurance Program Description (QAPD) in Appendix C of Chapter 12 of the PSAR.

SHINE PSAR Section 12.4.12, “Environmental Reports,” has been superseded by Chapter 19, “Environmental Review,” and is therefore vacated. As such, SHINE submitted its environmental report as Chapter 19 of its PSAR. The staff’s evaluation of this is documented in NUREG-2183, “Environmental Impact Statement for the Construction Permit for the SHINE Medical Radioisotope Production Facility.”

12.3 Regulatory Basis and Acceptance Criteria

As previously stated, SHINE PSAR Chapter 12 describes the conduct of operations for the IF and RPF; therefore, the regulatory basis and acceptance criteria provided below apply to both the IF and RPF.

The staff reviewed SHINE PSAR Chapter 12 against applicable regulatory requirements, using regulatory guidance and standards, to assess the sufficiency of the preliminary design and performance of the SHINE organization for the issuance of a construction permit. In

accordance with paragraph (a) of Title 10 of the *Code of Federal Regulations* (10 CFR) 50.35, "Issuance of Construction Permits," a construction permit authorizing SHINE to proceed with construction may be issued once the following findings have been made:

(1) SHINE has described the proposed design of the facility, including, but not limited to, the principal architectural and engineering criteria for the design, and has identified the major features or components incorporated therein for the protection of the health and safety of the public.

(2) Such further technical or design information as may be required to complete the safety analysis, and which can reasonably be left for later consideration, will be supplied in the final safety analysis report (FSAR).

(3) Safety features or components, if any, which require research and development have been described by SHINE and a research and development program will be conducted that is reasonably designed to resolve any safety questions associated with such features or components.

(4) On the basis of the foregoing, there is reasonable assurance that: (i) such safety questions will be satisfactorily resolved at or before the latest date stated in the application for completion of construction of the proposed facility, and (ii) taking into consideration the site criteria contained in part 100 of this chapter, the proposed facility can be constructed and operated at the proposed location without undue risk to the health and safety of the public.

With respect to the last of these findings, the staff notes that the requirements of 10 CFR Part 100 are specific to nuclear power reactors, and therefore not applicable to the SHINE facility. However, the staff evaluated SHINE's site specific conditions using site criteria similar to 10 CFR Part 100, by using the guidance in NUREG-1537. The staff's review evaluated the geography and demography of the site; nearby industrial, transportation, and military facilities; site meteorology; site hydrology; and site geology, seismology, and geotechnical engineering to ensure that issuance of the construction permit will not be inimical to public health and safety.

The staff's evaluation of the preliminary design of the SHINE organization does not constitute approval of the safety of any design feature or specification. Such approval will be made following the evaluation of the final design of the SHINE organization, as described in the FSAR as part of the SHINE operating license application.

12.3.1 Applicable Regulatory Requirements

The applicable regulatory requirements for the evaluation of the SHINE organization are as follows:

- 10 CFR 50.34, "Contents of applications; technical information," paragraph (a), "Preliminary safety analysis report."
- 10 CFR 50.40, "Common standards."
- 10 CFR Part 50, Appendix E, Part II, "Preliminary Safety Analysis Report."

12.3.2 Regulatory Guidance and Acceptance Criteria

In applying guidance and acceptance criteria, the staff used its judgment as to which acceptance criteria were relevant to SHINE's proposed facility, as much of this guidance was originally developed for nuclear reactors. Given the similarities in SHINE's proposed facility and non-power research reactors, the staff used established guidance documents and the Commission's regulations to determine the acceptance criteria for demonstrating compliance with 10 CFR regulatory requirements. For example, the staff used:

- NUREG-1537, Part 1, "Guidelines for Preparing and Reviewing Applications for the Licensing of Non-Power Reactors, Format and Content," issued February 1996 (Reference 4).

- NUREG-1537, Part 2, "Guidelines for Preparing and Reviewing Applications for the Licensing of Non-Power Reactors, Standard Review Plan and Acceptance Criteria," issued February 1996 (Reference 5).

- "Final Interim Staff Guidance [ISG] Augmenting NUREG-1537, Part 1, 'Guidelines for Preparing and Reviewing Applications for the Licensing of Non-Power Reactors: Format and Content,' for Licensing Radioisotope Production Facilities and Aqueous Homogeneous Reactors," dated October 17, 2012 (Reference 6).

- "Final Interim Staff Guidance Augmenting NUREG-1537, Part 2, 'Guidelines for Preparing and Reviewing Applications for the Licensing of Non-Power Reactors: Standard Review Plan and Acceptance Criteria,' for Licensing Radioisotope Production Facilities and Aqueous Homogeneous Reactors," dated October 17, 2012 (Reference 7).

As stated in the ISG Augmenting NUREG-1537, the staff determined that certain guidance originally developed for heterogeneous non-power research and test reactors is applicable to aqueous homogenous facilities and production facilities. SHINE used this guidance to inform the design of its facility and prepare its PSAR. The staff's use of reactor-based guidance in its evaluation of the SHINE PSAR is consistent with the ISG Augmenting NUREG-1537.

As appropriate, additional guidance (e.g., NRC regulatory guides, Institute of Electrical and Electronics Engineers (IEEE) standards, American National Standards Institute/American Nuclear Society (ANSI/ANS) standards) has been used in the staff's review of SHINE's PSAR. The use of additional guidance is based on the technical judgment of the reviewer, as well as references in NUREG-1537, Parts 1 and 2; the ISG Augmenting NUREG-1537, Parts 1 and 2; and the SHINE PSAR. Additional guidance documents used to evaluate SHINE's PSAR are provided as references in Appendix B of this SER.

12.4 Review Procedures and Technical Evaluation

As previously stated, SHINE PSAR Chapter 12 describes the conduct of operations for the IUs and RPF; therefore, the technical evaluation of the SHINE conduct of operations, described in SHINE PSAR Chapter 12, applies to both the IUs and RPF.

The staff evaluated the technical information presented in SHINE PSAR Chapter 12, as supplemented by the applicant's response to RAIs, to assess the sufficiency of the preliminary design and performance of the SHINE conduct of operations for the issuance of a construction

permit, in accordance with 10 CFR 50.35(a). The sufficiency of the preliminary design and performance of the SHINE conduct of operations is determined by ensuring the design and performance meet applicable regulatory requirements, guidance, and acceptance criteria, as discussed in SER Section 12.3, "Regulatory Basis and Acceptance Criteria." The results of this technical evaluation are summarized in SER Section 12.5, "Summary and Conclusions."

12.4.1 Organization

The staff evaluated the sufficiency of the preliminary design of the SHINE organization, as described in SHINE PSAR Section 12.1, in part by reviewing the organizational structure, the responsibilities of individuals and groups, the staffing for operations, the selection and training of personnel, the organizational aspects of radiation protection, and the production facility safety program, using the guidance and acceptance criteria from Section 12.1, "Organization," of ISG Augmenting NUREG-1537, Parts 1 and 2, and of NUREG-1537, Parts 1 and 2.

Consistent with the review criteria in Chapter 14, "Technical Specifications," of NUREG-1537, Part 2, Section 12.1, and ANSI/ANS 15.1-2007, "The Development of Technical Specifications for Research Reactors," Reaffirmed April 24, 2013, the staff evaluated the description of the SHINE review and audit activities to ensure that the PSAR provides a basis for the technical specification requirements for the organization activities.

The review procedures of NUREG-1537, Part 1, Section 12.1.1, "Structure," state that the description of the organizational structure should include the radiation safety function and indicate how the staff implementing that function interacts with the staff responsible for reactor operations and the top administrative officials. The multilevel chart should show the relationship of the review and audit function to the organizational structure. The persons implementing the review and audit function should communicate with the management of the reactor facility, but should report to an organizational level above this management to ensure independence of the review and audit function."

The SHINE PSAR provides the functional organization in Figure 12.1-1, and PSAR, Section 12.1, "Structure," states, in part, that "[t]he staff implementing the radiation safety function supports on-shift plant operations and interacts with Executive Management through the chain of command." However, the organization chart does not include the review and audit function or the radiation safety function.

Therefore, in RAI 12.1-1 (Reference 14), the staff requested that the applicant:

a) Include the review and audit committee and the radiation safety function in the organization chart.

b) Describe the responsibilities of the review and audit committee and the radiation safety function under PSAR Section 12.1.2, "Responsibility."

Additionally, the applicant was requested to ensure that the responsibility for the safe operation of the facility and for the protection of the health and safety of the staff and the public is clearly shown in Section 12.1.2 of the PSAR.

In its revised response to RAI 12.1-1 (Reference 99), the applicant stated that the SHINE Review and Audit Committee will report to the Chief Operating Officer and the SHINE radiation safety function (Radiation Protection Supervisor) will report to the Environmental Safety and

Health Manager. The applicant also provided an updated Operational Organization Chart showing the reporting and communication lines of the Review and Audit Committee and the Radiation Protection Supervisor. A revised figure 12.1-1 was provided via Revision 1 of the SHINE response to RAI 12.1-1 (Reference 99). An update to the PSAR on May 21, 2015 included a description of the SHINE management levels (Reference 32).

The staff reviewed Figure 12.1-1 and the information to be included in Section 12.1.2 of the SHINE FSAR to determine whether it is acceptable by evaluating the new figure and reviewing the information against the requirements of NUREG-1537.

The staff finds the new Figure 12.1-1 and the information to be acceptable for the issuance of a construction permit because the new figure and information describe and show the review and audit committee and the radiation safety function and describe their responsibilities. SHINE has revised its PSAR in include this information.

NUREG-1537, Part 2, Section 12.1, "Organization," Acceptance Criteria, states, in part, that "[t]he applicant should discuss the training of personnel, should reference the operator training program and the operator requalification program, and should include a review of compliance with the requirements of 10 CFR Part 55" ["Operators' Licenses"].

SHINE PSAR, Section 12.1.4, "Selection and Training Of Personnel," states, in part, that "SHINE establishes and maintains formal and informal indoctrination and training programs for personnel performing, verifying, or managing facility operation activities to ensure that suitable proficiency is achieved and maintained. The Training Manager (TM) is responsible to the PM [Plant Manager] for development and implementation of training that ensures satisfactory operational behavior and performance in the areas of nuclear, industrial, and radiological safety." However, SHINE PSAR, Section 12.1.4, does not include a reference to the operator requalification program or a review of compliance with the requirements of 10 CFR Part 55, as applicable.

Additional information was required for the staff to make a determination on the acceptability of the training of personnel. In RAI 12.1-2 (Reference 14), the staff requested that the applicant:

a) Include a reference to the operator training program and the operator requalification program.
b) Provide a review of SHINE's compliance with the requirement of 10 CFR Part 55, as applicable
c) Indicate if minimum requirements exist for the facility staff.

In response to RAI 12.1-2 (Reference 20), the applicant stated that the SHINE will do the following:

a) State that the licensed operator training program, including the requalification training program, will be developed and implemented in accordance with 10 CFR Part 55 as it pertains to non-power facilities.
b) State that SHINE will comply with the requirements of 10 CFR Part 55 as it pertains to non-power facilities.
c) Provide the required minimum qualifications for facility staff.

On the basis of its review, the staff has determined that the level of detail provided on the SHINE organization activities is adequate and supports the applicable acceptance criteria of

NUREG-1537, Part 2, Section 12.1, allowing the staff to make a finding that the applicant's commitments to develop and conduct organization activities provide reasonable assurance that the SHINE organization activities will comply with applicable requirements and be consistent with guidance.

Therefore, the staff finds the information to be included in SHINE FSAR Section 12.1, supplemented by the applicant's response to two RAIs, is sufficient and meets the applicable regulatory requirements and guidance for the issuance of a construction permit in accordance with 10 CFR 50.35. Further information required to complete the review may reasonably be left for later consideration. Following receipt of the SHINE FSAR, the staff will confirm that the above issues have been resolved.

12.4.2 Review and Audit Activities

The staff evaluated the sufficiency of the preliminary design of the SHINE review and audit activities, as described in SHINE PSAR Section 12.2, in part, by reviewing the composition and qualification of the committee members, charter and rules of the committee, conduct of the review function, and conduct of the audit function, using the guidance and acceptance criteria from Section 12.2, "Review and Audit Activities," of NUREG-1537, Parts 1 and 2.

Consistent with the review criteria in Chapter 14 of NUREG-1537, Part 2, Section 12.2, and ANSI/ANS 15.1-2007, the staff evaluated the description of the SHINE review and audit activities to ensure that the PSAR provides a basis for the technical specification requirements for the review and audit function.

While the above referenced PSAR sections described adequate review and audit activities, some further clarifications were needed.

NUREG-1537, Part 1, Section 12.2, "Review and Audit Activities," notes that the applicant should explicitly state who holds the approval authority and should specify how the review and audit committees communicate and interact with facility management and corporate management.

SHINE PSAR, Section 12.2, "Review and Audit Activities," discusses the establishment of the review and audit committees and states they report to Executive Management. However, approval authority is not addressed. Therefore, in RAI 12.2-1 (Reference 14), the staff requested that the applicant provide the following additional information:

a) State who holds approval authority.
b) Provide additional detail on how the review and audit committees interact with management.

In an updated response to RAI 12.1-1 (Reference 99), the applicant provided the following information:

a) The Chief Operating Officer holds approval authority for review and audit activities.
b) The review and audit committees' interaction with facility management was detailed.

SHINE updated its PSAR to incorporate the above details of who has approval authority and how the review and audit committees interact with facility management.

NUREG-1537, Part 2, Section 12.2, "Review and Audit Activities," Acceptance Criteria, states, in part, that "[t]he applicant should give the details of the review function…The reviews should include 10 CFR 50.59 ["Changes, tests, and experiments"] safety reviews." SHINE PSAR, Section 12.2.3, "Review Function," did not include this in the list of items required to be reviewed. In RAI 12.2-2 (Reference 14), the staff requested that the applicant add 10 CFR 50.59 safety reviews to the list of items to be reviewed or justify their exclusion.

In response to RAI 12.2-2 (Reference 20), the applicant stated that, the list of items in PSAR Section 12.2.3 requiring review by the SHINE review and audit committee will be updated in the SHINE FSAR to include 10 CFR 50.59 safety reviews. SHINE updated Section 12.2.3 of its PSAR to add "10 CFR 50.59 safety reviews" to the list of items requiring review by the SHINE review and audit committee.

NUREG-1537, Part 2, Section 12.2, "Review and Audit Activities," Acceptance Criteria, states, in part, that "[t]he applicant should give the details of the audit function. The minimum list of items to be audited should be that given in ANSI/ANS 15.1-1990 ['The Development of Technical Specifications for Research Reactors'],…. The audit of facility operations should include items such as organization and responsibilities, training, reactor operations, procedures, logs and records, experiments, health physics, technical specification compliance, and surveillances."

In addition, NUREG-1537, Part 1, Section 12.2.4, "Audit Function," states, in part, that "[t]he applicant should list and discuss the items that must be audited by the committee. In addition to audits by the facility committee, the licensee may consider entering into an auditing agreement with other non-power reactor facilities to bring in staff members from other non-power reactors to perform an audit."

SHINE PSAR, Section 12.2.4, "Audit Function," includes a list of examples of activities to be audited, but did not include details addressing the items above. Therefore, in RAI 12.2-3 (Reference 14), the staff asked the applicant to provide additional information expanding PSAR Section 12.2.4 to include the details addressing the items above, or justify their exclusion.

In response to RAI 12.2-3 (Reference 20), the applicant stated it will update Section 12.2.4 to expand on the description of SHINE activities to be audited, the audit frequencies, and information on the reporting of audit findings. SHINE stated they will work to establish relationships with other entities to participate in audits of the facility. SHINE has since updated Section 12.2.4 of the PSAR with this information.

On the basis of its review, the staff has determined that the level of detail provided on the SHINE review and audit activities is adequate and supports the applicable acceptance criteria of NUREG-1537, Part 2, Section 12.2, allowing the staff to make a finding that the applicant's commitments to develop and conduct review and audit activities provide reasonable assurance that the SHINE review and audit activities will comply with applicable requirements.

Therefore, the staff finds the information to be included in SHINE FSAR Section 12.2, as supplemented by the applicant's response to three RAIs, is sufficient and meets the applicable regulatory requirements and guidance for the issuance of a construction permit in accordance with 10 CFR 50.35. Further information required to complete the review may reasonably be left for later consideration. Following receipt of the SHINE FSAR, the staff will confirm that the above issues have been resolved.

12.4.3 Procedures

The staff evaluated the sufficiency of the preliminary design of the SHINE procedures, as described in SHINE PSAR Section 12.3, using the guidance and acceptance criteria from Section 12.3, "Procedures," in NUREG-1537, Part 1 and 2.

Consistent with the review criteria of Chapter 14 of NUREG-1537, Part 2, Section 12.3, and ANSI/ANS 15.1-2007, the staff evaluated the description of the SHINE procedure activities to ensure that the PSAR provides a basis for the technical specification requirements for procedures.

While the above referenced PSAR sections described adequate procedure activities, some further clarification was needed.

NUREG-1537, Part 1, Section 12.3, "Procedures," states, in part, that "[t]he applicant should discuss the basic topics that the procedures do or will cover…The applicant should discuss the methodology used for developing procedures, including the approval process. The applicant should also discuss the process required to make changes to procedures including substantive and minor permanent changes, as defined in ANSI/ANS 15.1[-2007 (Reference 55)], and temporary deviations to deal with special or unusual circumstances during operation. The applicant should note that 10 CFR 50.59 may apply to changes to procedures."

NUREG-1537, Part 2, Section 12.3, "Procedures," Acceptance Criteria, states, in part, that "[t]he applicant should discuss the method for the review and approval of procedures. The method should involve staff from reactor operations, radiation protection, and reactor administration and the review committee, as appropriate to the procedure under review and approval." Section 12.3 also states, in part, that "[t]he applicant should propose a method for making changes to procedures. This method should cover minor changes with little or no safety significance, substantive changes that are safety significant, and temporary deviations caused by operational needs." SHINE PSAR, Section 12.3, "Procedures," discusses operating procedures and the procedure program. It generally discusses the use of procedures and that the process for making changes and revisions is documented. However, additional detail was needed for the staff to assess the adequacy of the SHINE preliminary operating procedures and procedure program.

Therefore, in RAI 12.3-1 (Reference 14), the staff asked that the applicant:

a) Discuss the basic topics the procedures address or will cover.
b) Discuss the method for the review and approval of procedures.
c) Discuss the process required to make changes to procedures noting that 10 CFR 50.59 may apply to changes to procedures.

In response to RAI 12.3-1 (Reference 20), the applicant provided the following:

a) A list of the basic topics that SHINE procedures will cover, which will be developed consistent with Section 2.5 of the SHINE QAPD.

b) A description of the method for the initial review and approval of procedures activities listed in Part (a) of the SHINE response to RAI 12.3-1 was given. The applicant stated that this same method also applies when there are substantive changes to the procedures.

c) A discussion concerning the process required to make changes to procedures. The applicant stated that revisions to procedures related to activities listed in Part (a) of the SHINE Response to RAI 12.3-1 are initiated and tracked via the SHINE Information Management System.

Procedure revisions will receive a technical review, which will include a screening for 10 CFR 50.59 applicability, and will then be reviewed and approved as described in Part (b) of the SHINE response to RAI 12.3-1.

SHINE updated Section 12.3 of the PSAR to expand on the description of the applicant's method for the review and approval of procedures.

On the basis of its review, the staff has determined that the level of detail provided on the SHINE review procedure activities is adequate for the issuance of a construction permit and supports the applicable acceptance criteria of NUREG -1537, Part 2, Section 12.3.

Therefore, the staff finds the information to be included in SHINE FSAR Section 12.3, as supplemented by the applicant's response to an RAI, is sufficient to meet the applicable regulatory requirements and guidance for the issuance of a construction permit in accordance with 10 CFR 50.35. Further information required to complete the review may reasonably be left for later consideration. Following receipt of the SHINE FSAR, the staff will confirm that the above issues have been resolved.

12.4.4 Required Actions

The staff evaluated the sufficiency of the preliminary design of the SHINE required actions, as described in SHINE PSAR Section 12.4, using the guidance and acceptance criteria from Section 12.4, "Required Actions," in NUREG-1537, Part 1 and 2.

As stated in SHINE PSAR Section 12.4, "[r]equired actions to be taken in the event of a violation of a facility safety limit or the occurrence of a reportable event will be developed for the FSAR."

The staff has considered the statement in the PSAR and determined, using the guidance in NUREG-1537, that this information is specific to the operation of the SHINE facility, and as such, is not necessary for the issuance of a construction permit.

Therefore, the staff finds deferring its review on required actions, as described in SHINE PSAR Section 12.4, can reasonably be left for later consideration in the evaluation of the SHINE FSAR.

12.4.5 Reports

The staff evaluated the sufficiency of the preliminary design of the SHINE reports, as described in SHINE PSAR Section 12.5, using the guidance and acceptance criteria from Section 12.5, "Reports," in NUREG-1537, Part 1 and 2.

As stated in SHINE PSAR Section 12.5, "[a] detailed discussion of reports that will be submitted to the NRC will be provided in the FSAR."

The staff has considered the statement in the PSAR and determined, using the guidance in NUREG-1537, that this information is specific to the operation of the SHINE facility, and as such, is not necessary for the issuance of a construction permit.

Therefore, the staff finds deferring its review on reports, as described in SHINE PSAR 12.5, can reasonably be left for later consideration in the evaluation of the SHINE FSAR.

12.4.6 Records

The staff evaluated the sufficiency of the preliminary design of the SHINE records, as described in SHINE PSAR Section 12.6, using the guidance and acceptance criteria from Section 12.6, "Records," in NUREG-1537, Part 1 and 2.

As stated in SHINE PSAR Section 12.6, "[t]he SHINE records management program defines the process for managing SHINE records. The records management program includes the identification, generation, authentication, maintenance, and disposition of records. A detailed discussion of records management will be provided in the FSAR."

The staff has considered the statement in the PSAR and determined, using the guidance in NUREG-1537, that this information is specific to the operation of the SHINE facility, and as such, is not necessary for the issuance of a construction permit.

Therefore, the staff finds deferring its review on records, as described in SHINE PSAR 12.6, can reasonably be left for later consideration in the evaluation of the SHINE FSAR.

12.4.7 Emergency Planning

The staff evaluated the sufficiency of the SHINE Preliminary Emergency Plan against applicable regulatory requirements using regulatory guidance and standards to assess the sufficiency of the preliminary emergency plan.

The regulations in 10 CFR Part 50, Appendix E, Part II, "The Preliminary Safety Analysis Report," (PSAR) state that the PSAR should address the site layout and location, consideration of access routes, surrounding population distribution, land use, and jurisdictional boundaries. NUREG-1537, Part 2, Chapter 12, "Conduct of Operations," Section 12.1, "Introduction," provides the guidelines for reviewing applications and references NUREG-0849 (Reference 52) for the review and evaluation of emergency plans at non-power reactors. The planning standard provided in NUREG-0849, Section 1.0, "Introduction," calls for the emergency plan to provide a description of the facility – in this case the TSV - including authorized power level, location, and access routes to the facility. The owner and operator of the facility should be identified, and the objectives of the emergency plan explained.

The staff reviewed the information provided in Section 1.0, "Introduction," of the SHINE Preliminary Emergency Plan, including associated figures, site layout, and maps provided in the application.

In the course of reviewing the SHINE construction permit application, the NRC staff determined that additional information was required to prepare a safety evaluation report. In an RAI dated September 19, 2014 (Reference 14), the staff requested that the applicant provide a legible figure of the facility and/or an electronic copy that could be manipulated to facilitate resolution of building names/numbers and labels, roads and parking lots, site boundaries showing fences

and gates, major site features, access routes, and water bodies within approximately 1 mile of the site.

In an October 15, 2014, response to RAI-12.7-1 (Reference 20), the applicant provided a legible copy of Figure 1-1 of the SHINE Preliminary Emergency Plan, including building names/numbers and labels, roads and parking lots, site boundaries showing fences and gates, and major site features, including access routes. The applicant also stated there are no bodies of water within one mile of the SHINE site.

The staff reviewed the response to RAI 12.7-1 and concluded that the information provided is consistent with the guidelines in NUREG-0849. Therefore, this RAI is closed.

The staff finds the information in the application concerning the site layout and location, consideration of access routes, surrounding population distribution, land use, and jurisdictional boundaries, authorized power level, identification of the owner and operator of the facility, and an explanation of the objectives of the emergency plan are acceptable and meet the relevant requirements of 10 CFR Part 50, Appendix E, Section II, and the planning standard and criteria provided in the applicable guidance. The staff concludes that this preliminary information meets the applicable regulatory requirements and acceptance criteria and is therefore sufficient for the issuance of a construction permit. Further evaluation of this information will occur following the receipt of SHINE's Final Safety Analysis Report (FSAR) submitted with the SHINE operating license application.

There are no specific regulatory requirements in 10 CFR 50, Appendix E, Part II, "The Preliminary Safety Analysis Report," related to definitions. NUREG-1537, Part 2, Chapter 12, "Conduct of Operations," Section 12.2, "Definitions," provides the guidelines for reviewing applications and references NUREG-0849 for the review and evaluation of emergency plans at non-power reactors. Section 2.0, "Definitions," of NUREG-0849, states that the emergency plan should provide definitions for terms that are unique to the facility and should include phrases with meanings specific to the facility.

The staff reviewed the terms defined as having special meaning and the list of acronyms and abbreviations provided in the SHINE Preliminary Emergency Plan, Revision 0, and observed the use of these terms, acronyms, and abbreviations throughout the document.

The staff found the defined terms, acronyms, and abbreviations to be complete and used consistently throughout the document. The staff finds the information acceptable and determined that the definitions, acronyms, and abbreviations are consistent with the guidelines provided in NUREG-0849, Section 2.0, "Definitions." The staff concludes that the preliminary information provided meets the applicable regulatory requirements and acceptance criteria and is therefore sufficient for the issuance of a construction permit. Further evaluation of this information will occur following the receipt of the SHINE FSAR and emergency plan submitted for the operating license.

The regulations in 10 CFR Part 50, Appendix E, Part II, Section A require a description of the onsite and offsite organizations for coping with emergencies and the means for notification in the event of an emergency, and of persons assigned to the emergency organization. The guidance in NUREG-0849 and NUREG-1537, Part 2, Section 3.0, "Organization and Responsibilities," identifies criteria for evaluating the emergency organization including the onsite emergency organization and any augmentation from offsite groups, and the identification,

by normal everyday title, of all persons or groups that will fill positions in the emergency organization. These criteria include:

- A description of the emergency planning functions of Federal, State, and local government agencies, and identification of the assistance they would provide and of the applicant's emergency organization, including augmentation of the operations staff to provide assistance during an emergency, recovery from the emergency, and maintaining emergency preparedness.

- The arrangements and written agreements with local support organizations that would augment and extend the capability of the facility's emergency organization.

- A block diagram illustrating the interrelationship of the facility emergency organization to the total emergency response effort. Specification of the interface between the onsite emergency organization and offsite local support organizations and agencies.

- The identification by title of the individuals in charge of directing emergency operations; for coordinating emergency preparedness planning, updating emergency plans and procedures, and coordinating plans with other supporting organizations; for relating information about the emergency to the news media and the public, and of the individual in charge of both onsite and offsite radiological assessments including a line of succession, and responsibilities and authorities and those responsibilities which may not be delegated (such as notification and protective action decisions).

- The identification by title of the individuals providing onsite and offsite dose assessments and recommended protective actions, authorizing reentry into radiological controlled areas or portions of the facility that may have been evacuated during the emergency; terminating an emergency and initiating recovery actions and informing the emergency organization of planned organizational actions or changes, and authorizing volunteer emergency workers to incur radiation exposures in excess of normal occupational limits.

- The identification by title of the individuals who will declare an alert or site area emergency, activate the onsite ERO during all shifts, promptly notify offsite response authorities that an alert of site area emergency has been declared, notify the NRC Operations Center, initiate onsite and offsite protective actions, request support from offsite organizations, and either terminate the emergency or enter recovery mode.

The staff reviewed Section 3.0, "Organization and Responsibilities," of the SHINE Preliminary Emergency Plan, Rev. 0, to evaluate the emergency organization, and in an RAI letter dated September 19, 2014 (Reference14), submitted six RAIs related to this subsection. The applicant's responses to RAI 12.7-2 through 12.7-7 are contained in Reference 20.

In RAI 12.7-2, the staff requested that the applicant clarify if letters of agreements, with developed procedures for emergency response with local emergency response agencies, would be submitted with the SHINE operating license application. In response, the applicant confirmed that letters of agreement with local support organizations who could augment and extend the capability of the facility's emergency organization will be provided in the emergency plan, which will be provided as part of the SHINE operating license application. The applicant initiated an IMR to ensure the letters of agreement are provided. The staff finds this to be an acceptable response for the issuance of a construction permit. This issue has been identified

as a regulatory commitment in Appendix A of this SER. Following receipt of the SHINE Emergency Plan and FSAR prepared for the operating license, the staff will confirm that this issue has been resolved.

In RAI 12.7-3, the staff requested that the applicant clarify if the Operators and ERO staff positions will be filled by the same individuals and to describe the positions, duties, and responsibilities of the ERO staff. In response, the applicant stated that the positions, duties, and responsibilities of the ERO staff will be described in the SHINE Emergency Plan submitted with the SHINE operating license application. The applicant initiated an IMR to ensure the positions, duties, and responsibilities of the ERO staff are described in the SHINE Emergency Plan and provided as part of the SHINE operating license application. The staff finds this to be an acceptable response for the issuance of a construction permit. This issue has been identified as a regulatory commitment in Appendix A of this SER. Following receipt of the SHINE Emergency Plan and FSAR submitted with the SHINE operating license application, the staff will confirm that this issue has been resolved.

In RAI 12.7-4, the staff requested that the applicant describe the actions the on-shift operators will take if they cannot ensure that their activities can be placed in a safe condition before reporting to the on-site assembly area. In response to RAI 12.7-4, the applicant stated that equipment operators in the field would either place their activities in a safe condition or take whatever possible actions and report to the on-site assembly area and to the Emergency Director (ED).

However, the applicant's response to RAI 12.7-4 did not address on-shift operator actions, such as the actions taken by the shift supervisor, senior facility operator, and facility operator. In follow-up RAI 12.7-35, dated January 6, 2015 (Reference 15), the staff requested that the applicant address the actions of the on-shift operators. In response to RAI 12.7-35 (Reference 22), the applicant stated they would revise Section 3.3 of the SHINE Emergency Plan to clarify this issue. The applicant initiated an IMR to ensure the emergency plan was appropriately revised to address this issue. The staff is tracking this issue as a regulatory commitment in Appendix A of this SER. Following receipt of the SHINE Emergency Plan and FSAR submitted for the operating license, the staff will confirm that this issue has been resolved.

In RAI 12.7-36 dated March 25, 2015 (Reference 16), the staff requested that the applicant provide additional information on the actions on-shift operators will take if an emergency was declared, considering design basis, beyond design basis, security, and unplanned onsite and offsite events, if their activities could not be placed in a safe condition. The staff also requested that the applicant describe the programmatic processes for individuals as well as the safety systems necessary to maintain safe shutdown. In response to RAI 12.7-36 (Reference 48), the applicant stated they have initiated three IMRs to ensure the SHINE Emergency Plan provided as part of the SHINE operating license application will address these issues. The staff is tracking this issue as a regulatory commitment in Appendix A of this SER. Following receipt of the SHINE Emergency Plan and FSAR submitted for the operating license, the staff will confirm that these issues have been resolved.

In RAI 12.7-5, the staff requested that the applicant clarify the lines of succession for the shift supervisor if the shift supervisor is acting as the ED. In response to RAI 12.7-5, the applicant clarified that the senior licensed operator onsite will assume the role. The staff finds the response to be acceptable for the issuance of a construction permit.

In RAI 12.7-6, the staff requested that the applicant describe a line of succession for the responsibilities of the Emergency Preparedness Manager. In response to RAI 12.7-6, the applicant clarified that the Emergency Preparedness Manager is part of the SHINE management team and the responsibilities are outside the actual ERO framework and no line of succession will be required. The applicant stated that the Emergency Preparedness Manager is responsible for overall emergency plan maintenance and coordination, and that this position could respond to emergencies as part of the ERO. The staff finds the response to be acceptable for the issuance of a construction permit.

In RAI 12.7-7, the staff noted that the applicant did not include the Emergency Preparedness Manager in organization charts. In response to RAI 12.7-7, the applicant clarified that the responsibilities of the Emergency Preparedness Manager fits within the Chief Operating Officer's (COO's) chain of command, but there is no direct reporting relationship to the COO. The applicant also clarified that the Emergency Preparedness Manager is not in the line of succession for the ED. The staff finds this to be an acceptable response for the issuance of a construction permit

Emergency planning is programmatic and the information in this subsection pertains to the operations of the SHINE facility. Specific details regarding the organization and responsibilities are not necessary for the issuance of a construction permit. In the responses to RAIs 12.7-2, RAI 12.7-3, and RAIs 12.7-4/RAI 12.7-35, the applicant has stated it would provide additional information regarding the organization and responsibilities in the SHINE Emergency Plan and FSAR submitted with the operating license application. Therefore, the staff has deferred a more detailed evaluation of this subsection until receipt of the SHINE Emergency Plan and FSAR supporting an operating license. Following receipt of the SHINE Emergency Plan and FSAR for the operating license, staff will confirm that these issues have been resolved. The regulatory commitments for the emergency plan and FSAR related to this subject are briefly summarized below:

- The SHINE Emergency Plan provided as part of the SHINE operating license application will include letters of agreement made with local support organizations.

- The SHINE Emergency Plan provided as part of the SHINE operating license application will describe the positions, duties, and responsibilities of the ERO staff.

- The SHINE Emergency Plan, Section 3.3 will be revised to clarify the actions that on-shift operators will take if they cannot ensure their activities can be placed in a safe condition before reporting to on-site assembly areas.

- The SHINE Emergency Plan provided with the SHINE operating license application will describe the actions on-shift operators will take if their activities cannot be placed in a safe condition considering a design basis, beyond design-basis, security, and unplanned events. The SHINE Emergency Plan will also address the programmatic process for individuals to follow, as well as the safety systems necessary to maintain safe shutdown in the event of an emergency.

Based on the discussion above, the staff concludes that the information provided in the SHINE Preliminary Emergency Plan, Rev. 0, Section 3.0, "Organization and Responsibility," is sufficient for the issuance of a construction permit. Further evaluation of this subsection will occur

following the receipt of the SHINE Emergency Plan and FSAR submitted with the operating license application.

The regulations in 10 CFR Part 50, Appendix E, Part II, require that a PSAR provide sufficient information to ensure the compatibility of the proposed emergency plan with onsite areas and the proposed design features. Section C requires that protective measures be taken within the site boundary to protect health and safety in the, event of an accident. Section H requires a preliminary analysis reflecting the need to include methods for identifying the degree of seriousness and potential scope of radiological consequences of emergency situations within and outside the site boundary and assessing/recommending protective actions.

The acceptance criteria in NUREG- 0849, Section 4.0, “Emergency Classification System,” and from NUREG-1537, Part 2, Section 12.7, “Emergency Planning,” Sub-section 4.0, “Emergency Classification System,” state, in part, that the emergency plan should contain:

- An emergency classification system consistent with the planning standard.
- The emergency plan implementing procedures (EPIPs) should be contained in an appendix to the emergency plan.
- The emergency plan should include both an alert and site area emergency classification.
- The emergency plan should identify the classification of each accident identified in the emergency plan.

The staff reviewed Section 4.0, “Emergency Classification System,” of the SHINE preliminary Emergency Plan which states the classification scheme will be based on three guidance documents (Regulatory Guide 2.6 [Reference 53], ANSI/ANS-15.16-2008 [Reference 56], and NUREG-0849 [Reference 52]), will cover the range of events described in Chapter 13 of the PSAR and that a listing of EPIPs, by title, will be provided with the FSAR. In RAI 12.7-8, dated September 19, 2014 (Reference 14), the staff requested that the applicant provide a listing by title, and description, of implementing procedures for each class of emergency consistent with NUREG-0849 or to explain why this information is not necessary. In response to RAI 12.7-8 (Reference 20), the applicant stated that it would provide an Appendix to the Emergency Plan, listing by title, with description, EPIPs for each class of emergency in the SHINE Emergency Plan provided as part of the SHINE operating license application. The staff finds this to be an acceptable response for the issuance of a construction permit. The applicant initiated an IMR to ensure an appendix containing a listing of EPIPs with descriptions for each class of emergency is provided with the SHINE Emergency Plan submitted for the SHINE operating license application. The staff is tracking this issue as a regulatory commitment in Appendix A of this SER.

Emergency planning is programmatic and the information in this subsection pertains to the operations of the SHINE facility. While specific details regarding the emergency classification scheme are not necessary for the issuance of a construction permit, RAIs were necessary to confirm the adequacy of the scope of information provided in the preliminary emergency plan. In the response to RAI 12.7-8, the applicant stated it will provide an Appendix to the SHINE Emergency Plan submitted with the operating license application that lists, by title, with description, the EPIPs for each class of emergency. Therefore, the staff has deferred a more detailed evaluation of this subsection until receipt of the SHINE Emergency Plan and FSAR

supporting an operating license. SHINE's regulatory commitment is being tracked to ensure that EPIPs are provided. Following receipt of the SHINE Emergency Plan and FSAR for the operating license, staff will confirm that this issue has been resolved. The regulatory commitment for the emergency plan related to this subject is briefly summarized below:

- The SHINE Emergency Plan provided as part of the SHINE operating license application will include an appendix to the emergency plan that lists the EPIPs by title and description.

The staff concludes that the information provided in the SHINE Preliminary Emergency Plan, Rev. 0, Section 4.0, "Emergency Classification System," is not necessary to meet regulatory requirements and acceptance criteria for the issuance of a construction permit. Further evaluation of this subsection will occur following the receipt of the SHINE Emergency Plan and FSAR submitted with the SHINE operating license application.

The regulations in 10 CFR Part 50, Appendix E, Part II, Section H require a preliminary analysis reflecting the need to include methods for identifying the degree of seriousness and potential scope of radiological consequences of emergency situations within and outside the site boundary and assessing recommended protective actions.

The acceptance criteria in NUREG-0849, Section 5.0, "Emergency Action Levels," and from NUREG-1537, Part 2, Section 12.7, "Emergency Planning," Sub-section 5.0, "Emergency Action Levels," state, in part, that:

- The emergency action levels (EALs) should be appropriate to the specific facility and consistent with the emergency classes discussed in Section 12.7.4, and to the extent possible, specify the effluent monitors used to project dose rates and radiological effluent releases at the site boundary.

- The EALs should be comparable to the U.S. Environmental Protection Agency's protective action guides (PAGs) described in EPA 400-R-92-001.

The staff reviewed Section 5.0, "Emergency Action Levels," of the SHINE Preliminary Emergency Plan and submitted three RAIs (Reference 14) related to EALs. The applicant's responses to RAI 12.7-9 through 12.7-11 are contained in Reference 20.

In RAI 12.7-9, the staff requested that the applicant explain why an inadvertent criticality event in an unshielded area was not considered in the accident analyses. In its response, the applicant clarified its approach to the consideration of a criticality event regardless of whether the accident occurs inside or outside a shielded area and committed to revise Table 5-1, "Postulated Accidents for the SHINE Facility Emergency Classification, Maximum Off-site and Worker Dose, and Corresponding Emergency Action Level," as appropriate. The staff finds this to be an acceptable response for the issuance of a construction permit and is tracking this issue as a regulatory commitment in Appendix A of this SER. Following receipt of the SHINE Emergency Plan and FSAR submitted for the operating license, the staff will confirm that this issue has been resolved.

In RAI 12.7-10, the staff noted that Table 5-1 did not include a full list of EALs for each accident condition and requested that the applicant confirm that Table 5-1 would be provided with a full list of EALs for each accident condition. In response to RAI 12.7-10, the applicant committed to revise Table 5.1 to include a full list of EALs for each accident condition, in the SHINE

Emergency Plan submitted for the SHINE operating license application. The staff finds this to be an acceptable response for the issuance of a construction permit and is tracking this issue as a regulatory commitment in Appendix A of this SER. Following receipt of the SHINE Emergency Plan and FSAR submitted for the operating license, the staff will confirm that this issue has been resolved.

In RAI 12.7-11, the staff requested that the applicant specify effluent monitors that would be used to project dose rates and radiological effluent releases and include EALs to initiate protective actions per the guidance in NUREG-0849. In response to RAI 12.7-11, the applicant stated that the specific values/setpoints used for emergency classification will be provided in the SHINE Emergency Plan submitted as part of the SHINE operating license application. The applicant initiated an IMR to ensure the specific values/setpoints are provided with the SHINE Emergency Plan, submitted with the SHINE operating license application. The staff finds this to be an acceptable response for the issuance of a construction permit and is tracking this issue as a regulatory commitment in Appendix A of this SER. Following receipt of the SHINE Emergency Plan and FSAR submitted with the SHINE operating license application, staff will confirm that this issue has been resolved.

Emergency planning is programmatic and the information in this subsection pertains to the operations of the SHINE facility. While specific details regarding the EALs are not necessary for the issuance of a construction permit, RAIs were necessary to confirm the adequacy of the scope of information provided in the preliminary emergency plan. In the responses to RAI 12.7-9, 12.7-10, and 12.7-11, the applicant has stated it will revise the SHINE Emergency Plan submitted with the operating license application to consider a criticality event, to identify EALs for each identified accident condition, and to identify specific values/set points. Therefore, the staff has deferred a more detailed evaluation of this subsection until receipt of the SHINE Emergency Plan and FSAR supporting an operating license. SHINE's regulatory commitments are being tracked to ensure these issues are resolved in the emergency plan and FSAR submitted for the operating license. Following receipt of the SHINE Emergency Plan and FSAR for the operating license, the staff will confirm that these issues have been resolved. The regulatory commitments for the emergency plan related to this subject are briefly summarized below:

- The SHINE Emergency Plan provided as part of the SHINE operating license application will include a revised Table 5-1 that considers a criticality event.

- The SHINE Emergency Plan provided as part of the SHINE operating license application will include a revised Table 5.1, "Postulated Accidents for the SHINE Facility, Emergency Classification, Maximum Off-site and Worker Dose, and Corresponding Emergency Action Level," that provides a full list of EALs for each accident condition.

- The SHINE Emergency Plan provided as part of the SHINE operating license application will provide specific values/setpoints for emergency classification.

The staff concludes that the information provided in the SHINE Preliminary Emergency Plan, Revision 0, Section 5.0, "Emergency Action Levels," is not necessary to meet regulatory requirements and acceptance criteria for the issuance of a construction permit. Further evaluation of this subsection will occur following the receipt of the SHINE Emergency Plan and FSAR submitted with the SHINE operating license application.

The regulations in 10 CFR Part 50, Appendix E, Part II, Section H require a preliminary analysis reflecting the need to include methods for identifying the degree of seriousness and potential scope of radiological consequences of emergency situations within and outside the site boundary, including the capabilities for dose projection and dispatch of radiological monitoring teams within the EPZs.

The acceptance criteria from NUREG- 0849, Section 6.0 for the "Emergency Planning Zones," NUREG-1537, Part 2, Section 12.7, "Emergency Planning," Section 6.0, "Emergency Planning Zones," and in Regulatory Guide 2.6 supplementing ANSI/ANS-15.16-2008, Section 3.6 state, in part, that:

- The emergency plan should identify the EPZ.
- The emergency plan should provide an acceptable basis for the EPZ.
- The size of the EPZ should be established so that the dose to individuals beyond the EPZ is not projected to exceed the PAGs.

The potential radiological hazards to the public associated with the operation of research and test reactors and fuel facilities licensed under 10 CFR Part 50 involve considerations different than those associated with nuclear power reactors. As endorsed by Regulatory Guide 2.6, ANSI/ANS-15.16 describes an acceptable approach for emergency planning commensurate with the potential risk involved for facilities of various authorized power level. This approach to an acceptable EPZ size is also described in NUREG-0849, Appendix II, and was adopted by the applicant.

The staff reviewed Section 6.0, "Emergency Planning Zones," of the SHINE preliminary Emergency Plan, which states the applicant could not define a credible accident scenario that would result in radiological emergencies that involve an off-site plume exposure exceeding 1 rem whole body or 5 rem thyroid. Therefore, the applicant did not identify EPZs for the SHINE facility.

In RAI 12.7-12 dated September 19, 2014 (Reference 14), the staff noted that the applicant had not identified the size of the EPZ consistent with the criteria in the cited guidance in ANSI/ANS-15.16 and in NUREG-0849. In response to RAI 12.7-12 (Reference 21), the applicant responded by stating, in part, that:

> SHINE has performed calculations as part of the accident analysis, and the calculation results are described in Chapter 13 of the PSAR. SHINE has concluded that the radiological releases and consequences to workers and the public are maintained within 10 CFR 20 limits (i.e., 100 millirem to the general public and five rem to the worker). For this reason, Section 6.0 of the SHINE Preliminary Emergency Plan [Reference 3] states, in part, that:
>
> > *"As described in Chapter 13 of the SHINE PSAR (Reference 11.8), no credible accident scenarios at the SHINE facility result in radiological emergencies that involve an off-site plume exposure exceeding 1 rem whole body or 5 rem thyroid. Therefore, in accordance with ANSI/ANS-15.16-2008 (Reference 11.1) and NUREG-0849 (Reference 11.3), no EPZs have been identified for the SHINE facility."*
>
> Based on the above information, SHINE concludes that an emergency planning zone (EPZ) is not required at the SHINE facility, and the guidance and

information contained in ANSI/ANS-15.16-2008 and NUREG-0849 align with this position. There is no radiological emergency which would result in off-site plume exposures exceeding one rem whole body or five rem thyroid.

The staff understands the applicant's position that there may not be a radiological emergency resulting in an off-site plume that would exceed the criteria established for establishing an EPZ beyond the operational site boundary. However, consistent with the guidance in ANSI/ANS-15.16, for a facility with the anticipated authorized power level of the SHINE facility, an acceptable EPZ size would be the operational boundary. For the purposes of issuing a construction permit, the staff finds it sufficient for SHINE to adequately describe the considerations used to determine the EPZ for the site. The staff will further evaluate SHINE's characterization of its EPZ following the guidance in ANSI/ANS-15.16 after the receipt of the SHINE Emergency Plan and FSAR supporting an operating license.

Emergency planning is programmatic and the information in this subsection pertains to the operations of the SHINE facility. While the specific details regarding the emergency planning zone are not necessary for the issuance of a construction permit, RAIs were necessary to confirm the adequacy of the scope of information provided in the preliminary emergency plan. Therefore, the staff has deferred a more detailed evaluation of this subsection until receipt of the SHINE Emergency Plan and FSAR supporting an operating license application.

The staff concludes that the information provided in the SHINE Preliminary Emergency Plan, Revision 0, Section 6.0, "Emergency Planning Zones," of the SHINE preliminary Emergency Plan," is not necessary to meet regulatory requirements and acceptance criteria for the issuance of a construction permit. Further evaluation of this subsection will occur following the receipt of the SHINE Emergency Plan and FSAR submitted with the SHINE operating license application.

The regulations in 10 CFR 50 Appendix E, Part II, "The Preliminary Safety Analysis Report," Sections C, D, and E, require that emergency response measures be identified for each emergency. These response measures should be related to the emergency class and action levels that specify what measures are to be implemented. NUREG-1537, Part 2, Chapter 12, "Conduct of Operations," Section 12.7, "Emergency Response," provides the guidelines for reviewing applications and references NUREG-0849, which provides the guidelines for the review and evaluation of emergency plans at non-power reactors. In particular, NUREG-0849, Section 7.0, "Emergency Response," provides criteria for emergency response measures that should be identified for each emergency. NUREG-0849 and NUREG-1537, Part 2, acceptance criteria included the review and evaluation of:

- The notification information for emergency response including the actions to notify and mobilize the emergency organization and the applicable offsite support organizations for each emergency class and the location of current notification lists. Initial and follow-up emergency messages to the NRC and to offsite authorities, as applicable, should include: caller information such as name, title, and telephone number, a description of the emergency event, date and time of incident initiation, the location of the incident and the emergency class, quantity and type of radionuclides released or expected to be released, and the impact of releases and recommended offsite emergency actions. A method to ensure that offsite authorities have received the initial message and that it is authentic and that appropriate follow-up messages to offsite authorities are issued promptly.

- The methods for gathering and processing information for assessment actions should be described in the emergency plan, and PAGS are available and used by the appropriate personnel in a timely manner.

- The actions that could be taken to mitigate or correct the problem for each emergency class should be summarized in the emergency plan.

- The emergency plan should describe protective actions appropriate for the emergency class and should include: conditions for either partial or complete onsite evacuation, evacuation routes, and primary and alternate assembly areas; methods to ensure personnel accountability and the segregation of potentially contaminated personnel; protective measures and exposure guidelines for emergency personnel; provisions for isolating and access control of facility areas to minimize exposures to radiation and the spread of radioactive contamination; and the methods for monitoring radiation dose rates and contamination levels, both onsite and offsite, including provisions for transmitting collected information and data to those responsible for accident assessment.

- The emergency plan should describe the ability to promptly and effectively assess a release of radioactive material or hazardous chemicals including a description of procedures for estimating or measuring the release rate or source term; a description of the computer codes used to project doses along with supporting justifications, and discuss the validity of assumptions, and describe the method for assessing collateral damage to the facility.

The staff reviewed Section 7.0, "Emergency Response," of the SHINE Emergency Plan to evaluate the applicant's emergency preparedness, and in an RAI dated September 19, 2014 (Reference 14), submitted nine RAIs related to this subsection. The staff determined that the applicant did not adequately describe emergency response measures for each class of emergency and specify what measures should be implemented to promptly and effectively assess the release of radioactive material or hazardous chemicals. The applicant's responses to RAI 12.7-13 through 12.7-21 are contained in Reference 20.

In RAI 12.7-13, the staff requested that the applicant clarify who has the responsibility to classify an emergency event and to incorporate the clarification into the next revision of the SHINE Emergency Plan. In response to RAI 12.7-13, the applicant stated that the ED has the responsibility to classify an emergency event, and that clarifying language will be provided in the SHINE Emergency Plan submitted with the SHINE operating license application. The applicant initiated an IMR to ensure the clarifying language is provided in the SHINE Emergency Plan. The staff finds this to be an acceptable response for the issuance of a construction permit. This issue has been identified as a regulatory commitment in Appendix A of this SER. Following receipt of the SHINE Emergency Plan and FSAR, the staff will confirm that this issue has been resolved.

In RAI 12.7-14, the staff requested a summary description of those actions that the applicant could take to mitigate or correct the problem for each emergency class. In response to RAI 12.7-14, the applicant stated that a summary description of those actions that could be taken to mitigate or correct the problem for each class of emergency will be provided with the SHINE Emergency Plan, provided as part of the SHINE operating license application. The applicant initiated an IMR to ensure the summary descriptions are provided in the SHINE Emergency Plan. The staff finds this to be an acceptable response for the issuance of a construction

permit. This issue has been identified as a regulatory commitment in Appendix A of this SER. Following receipt of the SHINE Emergency Plan and FSAR submitted for the operating license, the staff will confirm that this issue has been resolved.

In RAI 12.7-15, the staff requested that the applicant describe the method(s) to assess collateral damage to the facility. In response to RAI 12.7-15, the applicant stated they will describe the methods for assessing collateral damage to the SHINE facility in the SHINE Emergency Plan submitted with the SHINE operating license application. The applicant initiated an IMR to ensure the methods for assessing collateral damage to the facility are described in the SHINE Emergency Plan. The staff finds this to be an acceptable response for the issuance of a construction permit. This issue has been identified as a regulatory commitment in Appendix A of this SER. Following receipt of the SHINE Emergency Plan and FSAR submitted for the operating license, the staff will confirm that this issue has been resolved.

In RAI 12.7-16, the staff requested that the applicant confirm that alternate assembly areas and evacuation routes will be provided in the FSAR. In response to RAI 12.7-16, the applicant clarified that alternate assembly areas and evacuation routes will be identified in the SHINE Emergency Plan, provided as part of the SHINE operating license application. The staff finds this to be an acceptable response for the issuance of a construction permit. This issue has been identified as a regulatory commitment in Appendix A of this SER. Following receipt of the SHINE Emergency Plan and FSAR, staff will confirm that this issue has been resolved. No IMR was initiated by the applicant.

In RAI 12.7-17, the staff requested that the applicant describe the “contamination controls” that will be in place throughout the facility and in close proximity to a contaminated area, or describe where this information can be found in the emergency plan. In response to RAI 12.7-17, the applicant stated that they will include this information in the SHINE Emergency Plan submitted with the SHINE operating license application. The applicant initiated an IMR to ensure that contamination controls are described in the SHINE Emergency Plan. The staff finds this to be an acceptable response for the issuance of a construction permit. This issue has been identified as a regulatory commitment in Appendix A of this SER. Following receipt of the SHINE Emergency Plan and FSAR submitted for the operating license, the staff will confirm that this issue has been resolved.

In RAI 12.7-18, the staff requested that the applicant define the thresholds for categorizing personnel being surveyed and evacuated through control points as “contaminated” and “decontaminated” before release. In response to RAI 12.7-18, the applicant stated that these thresholds will be defined in the SHINE EPIPs. The applicant initiated an IMR to ensure that the thresholds to categorize personnel being surveyed and evacuated through control points as “contaminated,” and to be decontaminated before release, is defined in the SHINE EPIPs. The staff finds this to be an acceptable response for the issuance of a construction permit. This issue has been identified as a regulatory commitment in Appendix A of this SER. Following receipt of the SHINE Emergency Plan and FSAR, staff will confirm that this issue has been resolved.

In RAI 12.7-19, the staff requested that the applicant describe protective measures and exposure guidelines for emergency personnel. In response to RAI 12.7-19, the applicant stated they will include protective measures and exposure guidelines for emergency personnel in the SHINE Emergency Plan submitted with the SHINE operating license application. The applicant initiated an IMR to track the inclusion of protective measures and exposure guidelines for emergency personnel in the SHINE Emergency Plan. The staff finds this to be an acceptable

response for the issuance of a construction permit. This issue has been identified as a regulatory commitment in Appendix A of this SER. Following receipt of the SHINE Emergency Plan and FSAR, the staff will confirm that this issue has been resolved.

In RAI 12.7-20 the staff requested that the applicant describe the methods that would be used to transmit radiation dose rates and contamination levels to onsite and offsite individuals involved in accident assessment. In response to RAI 12.7-20, the applicant stated that the methods for transmitting radiation dose rates and contamination levels onsite and offsite to those personnel involved in accident assessment will be described in the SHINE Emergency Plan submitted with the SHINE operating license application. The applicant initiated an IMR to ensure a description of these methods is provided in the SHINE Emergency Plan. The staff finds this to be an acceptable response for the issuance of a construction permit. This issue has been identified as a regulatory commitment in Appendix A of this SER. Following receipt of the SHINE Emergency Plan and FSAR submitted for the operating license, the staff will confirm that this issue has been resolved.

In RAI 12.7-21, the staff requested that the applicant provide the valid computer code(s) that will be used to project doses or concentrations to the public or environment including the assumptions made for purposes of analysis and the supporting justification. In response to RAI 12.7-21, the applicant stated that they do not plan to provide real-time dose projections. The applicant clarified that actual indications from installed instruments will be used for emergency classifications. Dose projections will be based on worst-case accident scenarios/calculations. The staff finds this to be an acceptable response for the issuance of a construction permit. Following receipt of the SHINE Emergency Plan and FSAR, the staff will confirm that this issue has been resolved.

Emergency planning is programmatic and the information in this subsection pertains to the operations of the SHINE facility. Therefore, while specific details regarding emergency response are not necessary for the issuance of a construction permit, RAIs were necessary to confirm the adequacy of the scope of information provided in the preliminary emergency plan. In the responses to RAIs 12.7-13 through RAI 12.7-21, the applicant states that it will provide additional information regarding emergency response in the SHINE Emergency Plan and FSAR submitted with the operating license application. Therefore, the staff has deferred a more detailed evaluation of this subsection until receipt of the SHINE Emergency Plan and FSAR supporting the application for an operating license. These issues are being tracked as regulatory commitments in Appendix A of this SER. Following receipt of the SHINE Emergency Plan and FSAR for the operating license, the staff will confirm that these issues have been resolved. The regulatory commitments for the emergency plan and FSAR related to this subject are briefly summarized below:

- The SHINE Emergency Plan submitted for the operating license will be revised to clarify that the ED will have the responsibility to declare an emergency event.

- The SHINE Emergency Plan submitted for the operating license will describe those actions that could be taken to mitigate or correct the problem for each class of emergency.

- The SHINE Emergency Plan submitted for the operating license will be revised to describe the methods for assessing collateral damage to the SHINE facility.

- The SHINE Emergency Plan submitted for the operating license will describe the contamination controls used throughout the facility and in close proximity to a contaminated area.

- The applicant stated that the EPIPs will define the threshold to categorize surveyed personnel evacuated through control points as “contaminated,” and to be decontaminated prior to release in accordance with Section V of Appendix E to 10 CFR 50 and the EPIPs.

- The SHINE Emergency Plan submitted for the operating license will include protective measures and exposure guidelines for emergency personnel.

- The SHINE Emergency Plan submitted for the operating license will describe the methods for transmitting radiation dose rates and contamination levels to both onsite and offsite accident assessment personnel.

The staff finds that the information provided in the SHINE Preliminary Emergency Plan, Revision 0, Section 7.0, “Emergency Response,” is not necessary to meet regulatory requirements and acceptance criteria for the issuance of a construction permit. Further evaluation of this subsection will occur following the receipt of the SHINE Emergency Plan and FSAR submitted for the operating license application.

The regulations in 10 CFR Part 50, Appendix E, Part II, require that a PSAR provide sufficient information to ensure the proposed emergency plan is compatible with proposed design features. Section H requires there is an onsite facility for use in assessing the consequences of a potential radiological accident. The acceptance criteria for information on emergency facilities and equipment from NUREG-0849 are:

- The emergency plan describes an ESC.

- Representative types of monitoring and sampling equipment that would be used for accident assessment and their location are described. For each type of accident identified, the emergency plan should describe the means of detecting the accident, the means of detecting any release of radioactive material or hazardous chemicals incident to the processing of licensed material, and the means of alerting operating staff.

- The sampling and monitoring equipment types should include portable and fixed radiation monitors, sampling equipment, equipment for personnel monitoring, equipment for specific radionuclide identification and analysis, and to assess the release to the environment of radioactive or hazardous chemicals incident to the processing of license material. The plan should also describe nonradiological monitors or indicators such as fire detectors, earthquake sensors, etc.

- The emergency plan should identify those measures that would be used to provide assistance to injured persons or those exposed to radiation. The capability to decontaminate, administer first aid, transport injured personnel, and arrange for treatment should be described including a description of both onsite and offsite services that support emergency response such as first aid personnel, firefighters, law enforcement assistance, and ambulance service. A list and description of both onsite and offsite emergency facilities, by location and purpose should be provided.

- The emergency plan should identify the emergency communications systems that would be available to communicate instructions and information both onsite and offsite throughout the course of an emergency.

The staff reviewed Section 8.0, "Emergency Facilities and Equipment," of the SHINE Preliminary Emergency Plan to ensure emergency facilities and equipment will be available, and in an RAI dated September 19, 2014 (Reference 14), submitted seven RAIs related to this subsection. The applicant's responses to RAI 12.7-22 through 12.7-28 are contained in Reference 20.

In RAI 12.7-22, the staff requested a more complete description of the ESC since Sections 7.2.2 and 8.2 of the SHINE Preliminary Emergency Plan, Rev. 0, do not clearly describe whether the ESC is either a fixed area or mobile, nor were the capabilities and equipment described. In response to RAI 12.7-22, the applicant stated they will provide a more complete description of the ESC including its primary location, back-up location, capabilities, equipment, and size in the SHINE Emergency Plan to be submitted as part of the SHINE operating license application. The staff finds this to be an acceptable response for the issuance of a construction permit. The applicant initiated an IMR for this topic and the staff has identified this as a regulatory commitment in Appendix A of this SER. Following receipt of the SHINE Emergency Plan and FSAR, the staff will confirm that this issue has been resolved.

In RAI 12.7-23, the staff requested that the applicant describe the means of detecting accident conditions, the means of detecting any release of radioactive material or hazardous materials, and the means of alerting the operations staff of an accident. The staff asked the applicant to confirm that for each accident identified in Table 5-1 of the SHINE Preliminary Emergency Plan, Revision 0, the means of detecting accident conditions, the means of detecting any release of radioactive material or hazardous materials, and the means of alerting the operations staff of the accident conditions be provided in the FSAR. In response to RAI 12.7-23, the applicant stated that for each accident identified in Table 5.1 of the SHINE Preliminary Emergency Plan, the applicant will provide the means of detecting accident conditions, the means of detecting release of either radioactive or hazardous materials, and the means of alerting the operations staff of the accident conditions with the FSAR. The staff finds this to be an acceptable response for the issuance of a construction permit. The applicant initiated an IMR for this topic to update the SHINE Emergency Plan to include the requested information. The staff has identified this as a regulatory commitment in Appendix A of this SER. Following receipt of the SHINE Emergency Plan and FSAR, staff will confirm that this issue has been resolved.

In RAI 12.7-24, the staff requested that the applicant describe in the emergency plan the specific facility locations of first aid equipment. In response to RAI 12.7-24, the applicant stated they will describe the locations of first aid equipment in the SHINE Emergency Plan provided as part of the SHINE operating license application. The staff finds this to be an acceptable response for the issuance of a construction permit. The applicant initiated an IMR for this topic to ensure the location of first aid equipment is described in the SHINE Emergency Plan. The staff has identified this as a regulatory commitment in Appendix A of this SER. Following receipt of the SHINE Emergency Plan and FSAR for the operating license, the staff will confirm that this issue has been resolved.

RAI 12.7-25 requested that the applicant identify the facilities, and to provide the written letters of agreement with hospitals to ensure the medical staff is prepared to handle radiological emergencies. In response to RAI 12.7-25, the applicant stated they will identify the facilities in which arrangements have been made to ensure that medical services are available and that the

medical staff are prepared to handle radiological emergencies in the emergency plan submitted with the SHINE operating license application. The staff finds this to be an acceptable response for the issuance of a construction permit. The applicant initiated an IMR to ensure the facilities are identified and written agreements are provided as part of the SHINE operating license application. The staff is tracking this item as a regulatory commitment in Appendix A of this SER. Following receipt of the SHINE Emergency Plan and FSAR, the staff will confirm that this issue has been resolved.

In RAI 12.7-26, the staff requested that the applicant describe who will be responsible for decontaminating an ambulance, medical personnel, and the medical facility and identify the procedures, and their location, that will be used for decontamination of emergency medical services/equipment/personnel. In response to RAI 12.7-26, the applicant stated they will identify the responsible person and the location of procedures for decontamination of emergency medical services/equipment/personnel in the SHINE Emergency Plan, provided as part of the SHINE operating license application. The staff finds this to be an acceptable response for the issuance of a construction permit. The applicant initiated an IMR for this topic which the staff is tracking as a regulatory commitment in Appendix A of this SER. Following receipt of the SHINE Emergency Plan and FSAR, staff will confirm that this issue has been resolved

In RAI 12.7-27, the staff requested that the applicant confirm that a description of the backup off-site communications system be provided in the FSAR. In response to RAI 12.7-27, the applicant stated they will provide a description of the backup off-site communications system in the SHINE Emergency Plan provided as part of the SHINE operating license application. The staff finds this to be an acceptable response for the issuance of a construction permit. The staff is tracking this issue as a regulatory commitment in Appendix A of this SER. Following receipt of the SHINE Emergency Plan and FSAR, the staff will confirm that this issue has been resolved.

The SHINE Preliminary Emergency Plan, Revision 0, Section 8.6, “Contingency Planning,” addresses arrangements made with alternate facilities and sources of alternate equipment. In RAI 12.7-28 the staff requested that the applicant confirm that arrangements will have been made with alternate facilities and to ensure the availability of equipment from multiple sources. In the response to RAI 12.7-28, the applicant stated they will confirm that arrangements have been made with alternate facilities and that sources of alternate equipment are available, if needed, in the SHINE Emergency Plan submitted as part of the operating license application. The staff finds this to be an acceptable response for the issuance of a construction permit. The applicant initiated an IMR for this topic. The staff is tracking this issue as a regulatory commitment in Appendix A of this SER. Following receipt of the SHINE Emergency Plan and FSAR, staff will confirm that this issue has been resolved.

Emergency planning is programmatic and the information in this subsection pertains to the operations of the SHINE facility. While specific details regarding emergency facilities and equipment are not necessary for the issuance of a construction permit, RAIs were necessary to confirm the adequacy of the scope of information provided in the preliminary emergency plan. In the response to RAIs 12.7-22 through RAI 12.7-28, the applicant has stated it will provide additional information regarding emergency facilities and equipment in the SHINE Emergency Plan and FSAR submitted with the operating license application. Therefore, the staff has deferred a more detailed evaluation of this subsection until receipt of the SHINE Emergency Plan and FSAR supporting an operating license. Following receipt of the SHINE Emergency Plan and FSAR for the operating license, staff will confirm that these issues have been

resolved. The regulatory commitments for the emergency plan and FSAR related to this subject are briefly summarized below:

- The SHINE Emergency Plan submitted as part of the operating license will provide a complete description of the ESC including its primary location, back-up location, capabilities, and size.

- Table 5.1 of the SHINE Emergency Plan will be revised to provide the means of detecting accident conditions, the means of detecting a release of either radioactive or hazardous materials, and the means of alerting the operations staff of the accident conditions.

- The SHINE Emergency Plan submitted as part of the operating license application will specifically describe the location of first aid equipment.

- The applicant will confirm that arrangements have been made with alternate facilities, and ensure alternate sources of equipment as part of the SHINE operating license application.

- The SHINE Emergency Plan submitted as part of the operating license application will describe both who has the responsibility for decontaminating an ambulance, medical personnel, and medical facility, and the location of the procedures for decontamination of emergency medical services/equipment/personnel. [No IMR initiated by applicant].

- The SHINE Emergency Plan submitted as part of the operating license application will describe the backup off-site communications system.

- The SHINE Emergency Plan submitted as part of the operating license application will include written Letters of Agreement with alternate facilities that will describe services, equipment, and provisions to be provided in the event of an emergency.

The staff concludes that the information provided in the SHINE Preliminary Emergency Plan, Rev. 0, Section 8.0, “Emergency Facilities and Equipment,” is not necessary to meet regulatory requirements and acceptance criteria for the issuance of a construction permit. Further evaluation of this information will occur following the receipt of the SHINE Emergency Plan and FSAR submitted with the operating license application.

The regulations in 10 CFR Part 50, Appendix E, Part II, Section C require that a PSAR provide sufficient information on protective measures to be taken within the site boundary to protect human health and safety in the event of an accident. Section H requires that a PSAR provide a preliminary analysis to identify the scope of potential radiological accidents. The acceptance criteria for information on recovery from NUREG-0849, Appendix 12.2 and NUREG-1537, Part 2 include:

- The emergency plan specifies that recovery procedures will be written and approved as required.

- The emergency plan describes the procedures for promptly determining the actions necessary to reduce any ongoing releases of radioactive material or hazardous

chemicals incident to the processing of licensed material and to prevent further incidents.

- The emergency plan describes the provisions for promptly and effectively accomplishing required restoration plans.

The staff reviewed Section 9.0, "Recovery," of the SHINE Preliminary Emergency Plan to ensure that the applicant considered the recovery phase of an accident, and in a RAI letter dated September 19, 2014 (Reference 14), submitted three RAIs related to this subsection. The applicant's responses to RAI 12.7-29 through 12.7-31 are contained in Reference 20.

In RAI 12.7-29, the staff requested that the applicant explain the bases for presenting a recovery condition that is different than that provided by the guidance. In response to RAI 12.7-29, the applicant stated that it would clarify its characterization of recovery in the SHINE Emergency Plan submitted as part of the SHINE operating license application. The staff finds this to be an acceptable response for the issuance of a construction permit. The applicant initiated an IMR for this topic which the staff has identified as a regulatory commitment in Appendix A of this SER. Following receipt of the SHINE Emergency Plan and FSAR submitted for the SHINE operating license application, the staff will confirm that this issue has been resolved.

In RAI 12.7-30, the staff requested that the applicant identify the section within the SHINE Preliminary Emergency Plan that described the SHINE plans to restore the facility after an accident and to recover after an emergency. The staff also requested that the applicant describe the methods and responsibilities for assessing both the damage to the facility and the status of the facility's capabilities to safely control radioactive material or hazardous chemicals. In response to RAI 12.7-30, the applicant stated they would describe in the SHINE Emergency Plan, provided as part of the SHINE operating license application, the methods and responsibilities for assessing the damage to the facility and status of the facility's capabilities to safely control radioactive material or hazardous chemicals associated with the process. The staff finds this to be an acceptable response for the issuance of a construction permit. The applicant initiated an IMR for this topic which the staff has identified as a regulatory commitment in Appendix A of this SER. Following receipt of the SHINE Emergency Plan and FSAR, staff will confirm that this issue has been resolved.

In RAI 12.7-31, the staff requested that the applicant identify who will write and approve the recovery plans and procedures, what elements will be included, and to identify the location of the plans. In response to RAI 12.7-31, the applicant initiated an IMR to ensure an explanation is provided in the SHINE Emergency Plan submitted with the SHINE operating license application. The staff finds this to be an acceptable response for the issuance of a construction permit. This issue has been identified as a regulatory commitment in Appendix A of this SER. Following receipt of the SHINE Emergency Plan, the staff will confirm that this issue has been resolved.

Emergency planning is programmatic and the information in this subsection pertains to the operations of the SHINE facility. While specific details regarding recovery are not necessary for the issuance of a construction permit, RAIs were necessary to confirm the adequacy of the scope of information provided in the preliminary emergency plan. In the responses to RAIs 12.7-29, RAI 12.7-30, and RAI 12.7-31, the applicant has stated it would provide additional information regarding recovery in the SHINE Emergency Plan and FSAR submitted with the operating license application. Therefore, the staff has deferred a more detailed evaluation of this subsection until receipt of the SHINE Emergency Plan and FSAR supporting an operating

license application. The regulatory commitments for the emergency plan related to this subject are briefly summarized below:

- Section 9.0 of the SHINE Emergency Plan submitted as part of the operating license application will be revised to clarify the characterization of recovery.

- The SHINE Emergency Plan submitted as part of the operating license application will describe the methods and responsibilities for assessing the damage to the SHINE facility and status of the facility's capabilities to safely control radioactive material or hazardous chemicals associated with the process.

- The SHINE Emergency Plan submitted as part of the operating license application will describe who will write and who will approve recovery plans and procedures, what elements will be included, and where the plans will be kept.

Following receipt of the SHINE Emergency Plan and FSAR for the operating license, staff will confirm that these issues have been resolved.

The staff concludes that the information provided in the SHINE Preliminary Emergency Plan, Revision 0, Section 9.0, "Recovery," is not necessary to meet regulatory requirements and acceptance criteria for the issuance of a construction permit. Further evaluation of this information will occur following the receipt of the SHINE Emergency Plan and FSAR submitted with the operating license application.

Appendix E, Part II, Section F of 10 CFR Part 50 describes the requirement for both employee training for those employees required to respond to an emergency and for nonemployees who might be called upon in the event of an emergency. The acceptance criteria for information on training from NUREG-0849 and the ISG for NUREG-1537, Part 2 include:

- The emergency plan should describe initial and periodic training for emergency response employees assigned functions for decision making and instructions, accident assessment, radiological monitoring and analysis teams, and for personnel involved in first aid and rescue, medical support, police, security, and ambulance and firefighting personnel.

- The emergency plan should describe the conduct of annual onsite emergency drills, include provisions for drill critiques including timely evaluation of observer comments and correction of identified deficiencies, and discuss the development of written scenarios for the conduct of annual action drills.

- The emergency plan should provide for a biennial review and update of the emergency plan and implementing procedures and agreements with offsite support organizations and agencies that includes review and approval by those responsible for emergency planning, incorporating modifications resulting from drill results or changes to the facility, and timely forwarding changes to the plan and implementing procedures, and agreements to the appropriate individuals, agencies, and supporting organizations.

- The emergency plan should describe the provisions to ensure the operational readiness of emergency communications and emergency health physics equipment including the

required maintenance and minimum calibration frequency, functional testing, and inventory of equipment and supplies.

The staff reviewed Section 10.0, "Maintaining Emergency Preparedness," of the SHINE Preliminary Emergency Plan to evaluate the applicant's maintenance of emergency preparedness and in a RAI letter dated September 19, 2014 (Reference 14), submitted three RAIs related to this subsection. The applicant's responses to RAI 12.7-32 through 12.7-34 are contained in Reference 20.

In RAI 12.7-32, the staff requested that the applicant confirm that the list of specific training topics described in Subsection 10.1.2 of the SHINE Preliminary Emergency Plan, Revision 0, will include training targeted to the following personnel:

- Those responsible for decision-making and transmitting emergency information and instructions.
- Those responsible for accident assessment, radiological monitoring and analysis teams.
- Those involved in first aid and rescue, medical support and police, security, ambulance and firefighting personnel.

In response to RAI 12.7-32, the applicant stated they will update Section 10.1 of the SHINE Preliminary Emergency Plan to list training targeted to personnel responsible for decision making; for transmitting emergency information and instructions; for accident assessment; radiological monitoring and analysis teams; and personnel associated with first aid and rescue medical support, and police, security, ambulance, and firefighting personnel, in the SHINE Emergency Plan provided for the SHINE operating license application and FSAR. The applicant initiated an IMR to track the update to Section 10.1 of the emergency plan. The staff finds this to be an acceptable response for the issuance of a construction permit. This issue has been identified as a regulatory commitment in Appendix A of this SER. Following receipt of the SHINE Emergency Plan and FSAR, staff will confirm that this issue has been resolved.

In RAI 12.7-33, the staff requested that the applicant describe how emergency drills demonstrate personnel protection measures during fires, medical emergencies, mitigation activities, search and rescue, and other similar events, and to identify where this information can be found in the emergency plan.

In response to RAI 12.7-33, the applicant stated that it will describe how emergency drills demonstrate personnel protection measures such as controlling and minimizing hazards to individuals during fires, medical emergencies, mitigation activities, and search and rescue in the SHINE Emergency Plan provided as part of the SHINE operating license application. The applicant initiated an IMR to ensure a description of how emergency drills demonstrate personnel protection measures is provided in the SHINE Emergency Plan submitted for the operating license application. The staff finds this to be an acceptable response for the issuance of a construction permit. This issue has been identified as a regulatory commitment in Appendix A of this SER. Following receipt of the SHINE Emergency Plan and FSAR, the staff will confirm that this issue has been resolved.

In RAI 12.7-34, the staff requested that the applicant provide information on the frequency, performance objectives, and plans for the emergency response training that will be provided to workers. The staff requested information on the general content and topics for training

programs to be given to both onsite and offsite emergency response personnel; and the administration of the training program including responsibility for training, positions requiring training, schedule, frequency, use of team training, hours required for training/retraining, required training for onsite personnel who are not member of the emergency planning staff, and special instruction and tours provided to offsite personnel who might be asked to respond in the event of an emergency.

In response to RAI 12.7-34, the applicant stated it will provide information on the topics and general content of the training programs for both onsite and offsite personnel, provide details on the administration of the training program, on training on the use of protective equipment, on training for onsite personnel who are not members of the emergency staff, and on training for offsite personnel such as fire, police, and medical staff who might be called upon to assist in an emergency as part of the SHINE operating license application. The applicant initiated an IMR to ensure this information will be provided in the SHINE Emergency Plan submitted with the operating license application. The staff finds this to be an acceptable response for the issuance of a construction permit. This issue has been identified as a regulatory commitment in Appendix A of this SER. Following receipt of the SHINE Emergency Plan and FSAR, staff will confirm that this issue has been resolved.

Emergency planning is programmatic and the information in this subsection pertains to the operations of the SHINE facility. While specific details regarding maintenance of emergency preparedness are not necessary for the issuance of a construction permit, RAIs were necessary to confirm the adequacy of the scope of information provided in the preliminary emergency plan. In the responses to RAIs 12.7-32, RAI 12.7-33, and RAI 12.7-34, the applicant has stated it will provide additional information regarding maintaining emergency preparedness in the SHINE Emergency Plan and FSAR submitted with the operating license application. Therefore, the staff has deferred a more detailed evaluation of this subsection until receipt of the SHINE Emergency Plan and FSAR supporting an operating license. The regulatory commitments for the emergency plan and FSAR related to this subject are briefly summarized below:

- Section 10.1 of the SHINE Emergency Plan provided as part of the operating license application will include training targeted to personnel responsible for decision making, accident assessment, and for radiological monitoring and analysis teams; and for personnel involved in first aid and rescue, medical support, and training for police, security, ambulance, and firefighting personnel.

- The SHINE Emergency Plan provided as part of the operating license application will demonstrate how emergency drills demonstrate personnel protection measures, including controlling and minimizing hazards to individuals during fires, medical emergencies, mitigation activities, search and rescue and other similar events.

- The SHINE Emergency Plan provided as part of the operating license application will provide the topics and general content of the training programs for both onsite and offsite emergency response personnel; the administration of the training program including responsibility for training, identification of positions requiring training, use of team and hours of training; training on the use of protective equipment such as respirators, protective clothing, monitoring devices, and other equipment used in emergency response; training for onsite staff who are not members of the emergency staff; and special instructions/tours the licensee would offer to non-licensee emergency personnel such as fire, police, and medical staff, and other non-licensee emergency

personnel who might be asked to provide emergency assistance to ensure they know the emergency plan, assigned duties, and effective response to an actual emergency.

Following receipt of the SHINE Emergency Plan and FSAR for the operating license, staff will confirm that these issues have been resolved.

The staff concludes that the information provided in the SHINE Preliminary Emergency Plan, Rev. 0, Section 10.0, "Maintaining Emergency Preparedness," is not necessary to meet regulatory requirements and acceptance criteria for the issuance of a construction permit. Further evaluation of this information will occur following the receipt of the SHINE Emergency Plan and FSAR submitted with the operating license application.

12.4.8 Security Planning

The staff evaluated the sufficiency of SHINE's treatment of security planning, as described in SHINE PSAR Section 12.8, using the guidance and acceptance criteria from Section 12.8, "Security Planning," in NUREG-1537, Part 1 and 2.

SHINE did not submit a security plan for its construction permit application. As stated in SHINE PSAR Section 12.8, "[t]he security plan will be developed using the guidance provided in Regulatory Guide 5.59, Revision 1 [Reference 56]."

A security plan is not required by regulation to be submitted for a construction permit application. Therefore, the staff considers SHINE's commitment to develop its security plan using Regulatory Guide 5.59, Revision 1 to be acceptable. The staff will review SHINE's security plan upon receipt as part of the SHINE FSAR.

12.4.9 Quality Assurance

The staff evaluated the sufficiency of the preliminary design of the SHINE QAPD, as described in Appendix C of SHINE PSAR Chapter 12, in part, by reviewing how the relevant requirements of 10 CFR 50.34(a)(7) were satisfied and by using the guidance and acceptance criteria from Section 12.9, "Quality Assurance," of NUREG-1537, Parts 1 and 2, which provides a basis for the staff's review of QA programs based on ANSI/ANS-15.8. The following is an evaluation of the SHINE QAPD as described in Appendix C of SHINE PSAR Chapter 12.

Section 12.9, "Quality Assurance," of SHINE PSAR states that the "SHINE QA-1, Quality Assurance Program Description (QAPD), is based on ANSI/ANS 15.8-1995 [Reference 57]) (ANSI/ANS, 1995), 'Quality Assurance Program Requirements for Research Reactors,' with guidance from Regulatory Guide 2.5, Revision 1." However, it is not clear to what extent ANSI/ANS 15.8-1995 has been applied to the development of the SHINE QAPD for the facility.

Therefore, in RAI 12C.1-1 (Reference 14) the staff requested that the applicant confirm to what extent the SHINE QAPD implemented the guidance provided in ANSI/ANS-15.8-1995 across the facility, identifying and justifying any deviations from the guidance. In response to RAI 12C.1-1 (Reference 20), the applicant stated, in part, that according to Regulatory Guide 2.5 (Reference 58) ANSI/ANS-15.8-1995 provides an acceptable method of complying with the program requirements of 10 CFR 50.34, and was used by SHINE for developing the QAPD for the entire facility. The staff reviewed the SHINE response to RAI 12C.1-1 and determined that additional information was required to complete the review. Therefore, staff issued additional RAIs on January 6, 2015 (Reference 15).

In RAI 12C.1-3, part (a) (Reference 15), the staff requested that the applicant further clarify its response to RAI 12C.1-1, by explaining whether SHINE had verified that ANSI/ANS-15.8-1995 is sufficient for use in the development of the SHINE QAPD. In response to RAI 12C.1-3, part (a) (Reference 22) the applicant stated that SHINE had revised the Executive Summary of the SHINE QAPD to state that "SHINE had determined that ANSI/ANS 15.8-1995 is appropriate to use in the design of the facility even though the standard was written for research reactors." The staff reviewed the SHINE response to RAI 12C.1-3, part (a), and determined that additional information was required to complete the review.

In RAI 12C.1-5 (Reference 16), the staff requested that the applicant further clarify its response to RAI 12C.1-3, part (a), by explaining if SHINE had determined whether ANSI/ANS 15.8-1995 is sufficient for use in the development of the SHINE QAPD, which is to be applied in the design, fabrication, construction, and operation of the SHINE facility.

The applicant's response to RAI 12C.1-5 (Reference 24), indicated that SHINE had revised the Executive Summary of the SHINE QAPD to state that "SHINE has determined that ANSI/ANS-15.8-1995 is sufficient for use in the development of the SHINE QAPD, which is to be applied to the design, fabrication, construction, and operation of the SHINE facility."

The staff reviewed the SHINE response to RAI 12C.1-5 and verified that the revised Executive Summary of the SHINE QAPD was appropriately updated, based on the RAI response. The staff finds that the Executive Summary adequately describes the application of guidance provided in ANSI/ANS-15.8-1995 in the development of the SHINE QAPD.

In RAI 12C.1-3, part (b) (Reference 15), the staff requested the applicant to clarify if the "SHINE QA-1" referred to in the first paragraph of Section 12.9 of the SHINE PSAR is, in fact, SHINE QAPD document number 2000-09-01. In response to RAI 12C.1-3 (Reference 22), the applicant stated that the naming convention of the QAPD had been changed from "SHINE-QA-1," to document number 2000-09-01. SHINE updated Section 12.9 of the PSAR to refer to the current naming convention of the SHINE QAPD (Reference 32). The staff considers this RAI resolved.

Section 1.1, "Scope," of SHINE QAPD describes the administrative and engineered controls to be used during the design, construction, and operation of the facility.

In RAI 12C.5-1 (Reference 15), the staff requested that SHINE provide additional information regarding the quality assurance requirements that apply during the decommissioning phase. In response to RAI 12C.5-1 (Reference 22), the applicant stated that they had removed the term "decommissioning" from Sections 1.1 and 1.2 of the QAPD, and revised Section 5, "Decommissioning," of the SHINE QAPD, to state that it will be updated at a later date. The SHINE commitment to update the QAPD at a later date, to address the requirements for decommissioning, is acceptable to the staff as this guidance is not necessary for the design and construction phases of the facility's life.

The SHINE QA program, as described in Section 1.2, "Application," of the SHINE QAPD, will be applied to SHINE activities, consistent with their importance to safety and reliability. Such activities will include, at a minimum, those related to irradiation unit safety and protection system, material processing safety, criticality safety, engineered safety features, and applicable radiation monitoring systems. SHINE will apply a graded approach to those items and activities that could affect the quality of safety-related SSCs and other components not designated as safety-related. SHINE activities affecting quality include siting, designing, purchasing,

fabricating, handling, shipping, receiving, storing, cleaning, erecting, installing, repairing, maintaining, modifying, inspecting, testing, and operating.

The staff determined that the description of the SHINE QA program application met the guidance provided in Section 12.9 of NUREG-1537, Parts 1 and 2, and ANSI/ANS-15.8-1995, and is therefore acceptable.

In Section 1.3, "Definitions," the SHINE QAPD provided a list of key definitions used throughout the document. In RAI 12C.1-4 (Reference 15), the staff requested that the applicant clarify what definition of "safety-related" was provided in the SHINE stand-alone Administrative Procedure (AP) 2000-10-01, and where that definition was included in the SHINE QAPD. In addition, the staff requested additional information discussing why it was acceptable to maintain key definitions that were used in the SHINE QAPD, in a stand-alone administrative procedure. The applicant responded (Reference 22) that the following definition for safety-related SSCs was provided in the SHINE AP 2000-10-01 and revised Section 1.3 of the QAPD to include it, as follows:

> Safety-related SSC – those SSCs that are relied upon to remain functional during normal conditions and during and following design basis events to assure:
>
> 1. The integrity of the primary system boundary;
> 2. The capability to shutdown the target solution vessel (TSV) and maintain the target solution in a safe shutdown (SSD) condition;
> 3. The capability to prevent or mitigate the consequences of accidents which could result in potential exposures comparable to the applicable guideline exposures set forth in 10 CFR 20;
> 4. That the potential for an inadvertent criticality accident is not credible;
> 5. That acute chemical exposures to an individual from licensed material or hazardous chemicals produced from licensed material could not lead to irreversible or other serious, long-lasting health effects to a worker or cause mild transient health effects to any individual located outside the owner controlled area; or
> 6. That an intake of 30 mg or greater of uranium in soluble form by any individual located outside the owner controlled area does not occur.

In the same response, the applicant also stated that Section 1.3 of the QAPD was revised to include all applicable ANSI/ANS-15.8-1995 (R2013) definitions. The response also stated that all definitions included in the SHINE QAPD are consistent with those provided in Section 1.3 of ANSI/ANS-15.8-1995 (R2013), with the following exceptions:

1. Modified the definition of "commissioning" by replacing the word "reactor" with "irradiation facility."
2. The definition of "experiment" was not included in the SHINE QAPD.
3. Modified the definition of "management" by replacing the words "research reactor" with "SHINE."
4. The definitions of "non-power reactor," "research reactor," and "test reactor" were not included in the SHINE QAPD.
5. The definition of "safety-related SSCs" was modified as described above.

The inclusion of applicable ANSI/ANS-15.8-1995 definitions in the revised SHINE QAPD addressed staff's concern with maintaining key definitions in a stand-alone administrative

procedure, thus allowing for appropriate control of definitions that are important to establishing the QA program at SHINE. The modification of the definition of "commissioning" and "management" as described above is acceptable to the staff, as these changes are appropriate for the SHINE facility, which does not meet the definition of a "reactor." The exclusion of the definition of experiment is acceptable, as the applicant has stated no experimentation will be necessary for the proposed operation of the facility. Further, the exclusion of definitions of "non-power reactor," "research reactor," and "test reactor" is also acceptable to the staff because these definitions do not apply to SHINE.

In RAI 12C.1-6, part (a) (Reference 16), the staff asked the applicant to clarify the basis for not including the definition of "experiment" in the QAPD, since conduct of experiments and use of experimental equipment are discussed in Sections 2.10 and 2.19 of the QAPD, respectively. The applicant's response to RAI 12C.1-6, part (a) (Reference 24), indicated that SHINE did not plan on conducting experiments or utilizing experimental equipment, and the definition of "experiment" was, therefore, not included in the SHINE QAPD. Further, SHINE had revised Section 2.10 to remove the phrase "experiment fabrication" and had removed Section 2.19, Experimental Equipment, from the SHINE QAPD. The staff reviewed the SHINE response to RAI 12C.1-6, part (a) and verified that the SHINE QAPD was appropriately updated, based on the RAI response. The staff finds the SHINE response to be acceptable.

In RAI 12C.1-6, part (b) (Reference 16), the staff asked the applicant to provide additional information regarding the definitions of "audit," as used in the SHINE QAPD Sections 2.7, "Control of Purchased Items and Services," and 2.7.3, "Verification Activities," and "assessment," as used in Section 2.18, "Assessment," and provide clarification as to the difference between the two definitions. The applicant's response to RAI 12C.1-6, part (b) (Reference 24), stated that the SHINE definitions of "assessment" and "audit" are identical and SHINE used the terms interchangeably. SHINE further stated that they define both "assessment" and "audit" as "[a] planned and documented activity performed to determine by investigation, examination, or evaluation of objective evidence the adequacy of and compliance with established procedures, instructions, drawings, and other applicable documents, and the effectiveness of implementation." The staff finds the applicant's response to be acceptable.

In RAI 3.5-6, part (a) (Reference 16), the staff asked the applicant to provide a performance based definition for the fourth part (i.e., '[t]hat the potential for an inadvertent criticality accident is not credible") of the six-part definition of the "safety-related SSCs," or provide a discussion as to why it is not necessary. Further, in part (b) of the same RAI, the staff asked the applicant to discuss how the SHINE definition of "safety-related SSCs" aligns with the definition of "basic component" provided in 10 CFR 21.3. The applicant's response to RAI 3.5-6, part (a) (Reference 24), stated that SHINE had revised the definition of "safety-related," to read:

> Safety-related SSCs: Those SSCs that are relied upon to remain functional during normal conditions and during and following design basis events to assure:
>
> 1. The integrity of the primary system boundary;
> 2. The capability to shutdown the target solution vessel (TSV) and maintain the target solution in a safe shutdown (SSD) condition;
> 3. The capability to prevent or mitigate the consequences of accidents which could result in potential exposures comparable to the applicable guideline exposures set forth in 10 CFR 20;
> 4. That all nuclear processes are subcritical, including use of an approved

margin of criticality;

5. That acute chemical exposures to an individual from licensed material or hazardous chemicals produced from licensed material could not lead to irreversible or other serious, long-lasting health effects to a worker or cause mild transient health effects to any individual located outside the owner controlled area; or
6. That an intake of 30 mg or greater of uranium in soluble form by any individual located outside the owner controlled area does not occur.

The staff verified that the SHINE QAPD was appropriately updated, based on the RAI response. The staff finds the SHINE response to be acceptable as it provides performance based criteria for acceptability.

Further, the SHINE response to RAI 3.5-6, part (b), stated that SHINE considers safety-related SSCs, as defined in part (a) of the RAI response, to be basic components, as defined in 10 CFR 21.3. The staff reviewed the SHINE response to RAI 3.5-6, part (b) and found that the SHINE proposed definition of “safety-related structures, systems, and components” and treatment of “basic component” are acceptable in providing a link to SHINE’s QAPD for Part 21 requirements.

The SHINE QAPD is a top-level policy document that describes the requirements and tasks assigned to the various organizational elements, to achieve the SHINE objectives in assurance of quality. The SHINE overall philosophy regarding the achievement and assurance of quality is described in the QAPD, while implementing documents assign more specific responsibilities and duties for conducting activities within the scope of the QAPD.

Section 2.1, “Organization,” of the SHINE QAPD describes the SHINE organizational structure, functional responsibilities, levels of authority, and lines of communication for establishing, executing, and verifying implementation of activities within the scope of the QAPD.

The Quality Manager is responsible for the development and verification of implementation of the QAPD. The Quality Manager reports to the Chief Operating Officer (COO), an adequately authoritative level of management. The Quality Manager also has the ability and responsibility to report to Chief Executive Officer (CEO), who has overall responsibility for the SHINE QA program. The SHINE QAPD further establishes that the CEO delegates the necessary responsibility and authority, to ensure that quality is achieved and maintained by those who have been assigned responsibility for performing work, and that quality achievement is verified by persons not directly performing the work.

The QAPD establishes that the COO has access to work areas and encourages managers and employees to identify problems, initiate, recommend, or provide corrective action, and ensure corrective action implementation.

The SHINE QAPD establishes independence between the organizations responsible for performing a function and oversight activities performed by the quality organization (i.e., quality assurance and quality control).

The staff determined that the SHINE organizational controls are consistent with the guidance provided in Section 12.9 of NUREG-1537, Parts 1 and 2, and ANSI/ANS-15.8-1995, and therefore acceptable.

The SHINE QAPD documents the requirements for establishing, implementing, and managing the QA program. The program implements a graded approach to quality, as described in Enclosure 2 of the SHINE QAPD. Quality Level (QL)-1 classification implements the full measure of the SHINE QAPD and will be applied to all safety-related SSCs. QL-2 classification will include the non-safety related activities performed by SHINE, and that are deemed necessary to ensure the manufacture and delivery of highly reliable products and services, to meet or exceed customer requirements and expectations.

All SHINE activities and tasks will be performed consistent with approved implementing procedures. SHINE procedures will be delineated, managed, and maintained by the Quality Manager, with support from SHINE staff.

The program provides for the appropriate and necessary indoctrination and training of personnel who perform activities affecting quality, to ensure that suitable proficiency is achieved and maintained. When required, qualification and selection of personnel will be conducted consistent with requirements established in applicable SHINE procedures. The scope of indoctrination will include administrative and technical objectives, as well as the requirements of applicable codes, standards, and the SHINE QAPD. Records of personnel training and qualification will be maintained.

In RAI 12C.E2-6, part (a) (Reference 16), the staff asked the applicant to clarify if the QL-1 classification applies to safety-related activities, as well as safety-related SSCs. In addition, in part (b) of the same RAI, the staff asked SHINE to clarify how the definition of the QL-2 classification is based on safety significance considerations. Further, in part (c) of the same RAI, the staff asked SHINE to explain if the QL-2 classification is intended to be applied only to selected non-safety related SSCs and activities.
The SHINE response to RAI 12C.E2-6 (Reference 24), part (a) indicated that SHINE had revised the definition of the QL-1 classification to apply to safety-related activities, as well as safety-related SSCs. The staff reviewed the SHINE response to RAI 12C.E2-6, part (a) and verified that the revised definition of the QL-1 classification in Enclosure 2 of the SHINE QAPD was appropriately updated, based on the RAI response.

The SHINE response to RAI 12C.E2-6, part (b) indicated that SHINE had revised the definition of the QL-2 classification, to be based on safety significance considerations and the application of the full scope of the SHINE QAPD to the activities affecting quality. Further, the response stated that SHINE had added a new QL-3 classification, to be applied to non-safety related SSCs or activities that do not support or protect the safety function of safety-related SSCs or activities. The staff reviewed the SHINE response to RAI 12C.E2-6, part (b) and verified that the revised definition of the QL-2 classification and the new definition of the QL-3 classification were appropriately included in Enclosure 2 of the SHINE QAPD, based on the RAI response.

In response to RAI 12C.E2-6, part (c), SHINE stated that the QL-2 classification is intended to be applied only to selected non-safety related SSCs and activities. The staff reviewed the SHINE response to RAI 12C.E2-6, part (c), and found it to be acceptable.

The staff finds that the revised QL-1, QL-2, and QL-3 classifications adequately represent a graded approach to quality, as described in Section 2.2 and Enclosure 2 of the SHINE QAPD. The staff determined that the SHINE programmatic controls are consistent with the guidance provided in Section 12.9 of NUREG-1537, Parts 1 and 2, and ANSI/ANS-15.8-1995.

In Section 2.3, “Design Control,” the SHINE QAPD establishes a design control process to control the design, design changes, and modifications subject to the provisions of the QAPD. The SHINE QAPD states that procedures will identify the process and include the provisions for the control of design documents, control of software, and implementation of required rules, regulations, codes, and standards.

As described below, the staff determined that the SHINE design controls are consistent with the guidance provided in Section 12.9 of NUREG-1537, Parts 1 and 2, and ANSI/ANS-15.8.

Section 2.3.1, “Design Requirements,” of the SHINE QAPD establishes that applicable design inputs, including design bases, performance requirements, regulatory requirements, codes, and standards, are to be identified and documented.

Section 2.3.2, “Design Process,” states that SHINE is responsible for identifying and controlling the design interfaces and will coordinate activities among participating organizations. The applicability of standardized or previously proven designs, with respect to meeting pertinent design inputs, will be verified for each application. Deviations from the established design inputs will be documented and controlled.

The design organization will ensure that final design is relatable to the design input by adequate documentation. Computer design programs used to develop any portion of the facility design or to analyze the design will be controlled. When a design program must be developed, the program will be controlled to ensure that it is fully documented and validated. When changes to previously validated computer programs are made, documented re-validation will be performed for the change and include appropriate benchmark testing.

Section 2.3.3, “Design Verification,” describes how the SHINE independent design reviews will be performed to verify the adequacy of design. Design verification will be performed by competent persons other than those who designed the item. Design verification will be completed prior to reliance upon the component, system, structure, or computer program to perform its function in operations. Qualification testing will be defined in formal test plans and will include appropriate acceptance criteria. Testing will demonstrate the adequacy of performance that simulates the most adverse design conditions. Test results will be documented and verified to have met the test requirements.

Section 2.3.4, “Design Documents and Records,” describes the SHINE process to ensure that design documents and records will provide evidence that the design and design verification processes were performed. Such documents and records will be collected, stored, and maintained for the life of the safety-related item.

Section 2.3.5, “Commercial Grade Items,” states that SHINE will have procedures in place, to provide for reviews and evaluations of commercial grade items, to be used in safety-related applications. If a commercial grade item is modified or selected by special inspection and/or testing to requirements that are more restrictive than the supplier’s published product description, the item will be identified in a different manner that is traceable to a documented description of the difference.

Section 2.3.6, “Change Control,” describes how modifications to the SHINE facility’s SSCs will be procedurally controlled. Design changes will be documented, justified, and subject to control measures commensurate with those applied to the original design. These measures will include assurance that the design analyses for SSCs or computer codes are still valid. When a

significant design change is necessary because of an incorrect design, the design organization will review and modify the design process and verification procedure, as necessary.

In Section 2.4, “Procurement Document Control,” the SHINE QAPD describes a process to ensure that procurement documents contain sufficient technical and quality requirements to ensure that the items and services satisfy the needs of SHINE. The SHINE QAPD stipulates that procurement documents at all procurement levels identify the documentation required to be submitted for information, review, or approval by SHINE. The procurement documents will require access to the supplier’s facility and records by designated individuals. Procurement documents will require the supplier to report non-conformances associated with the items or services being procured.

The staff determined that the SHINE procurement document controls are consistent with the guidance provided in Section 12.9 of NUREG-1537, Parts 1 and 2, and ANSI/ANS-15.8-1995, and therefore acceptable.

Section 2.5, “Procedures, Instructions, and Drawings,” describes the SHINE measures to ensure that quality activities are based on documented instructions, procedures, or drawings, as appropriate. These documents will include or reference appropriate quantitative or qualitative acceptance criteria for determining that activities have been satisfactorily accomplished.

The staff determined that the SHINE controls for instructions, procedures, and drawings are consistent with the guidance provided in Section 12.9 of NUREG-1537, Parts 1 and 2, and ANSI/ANS-15.8-1995, and therefore acceptable.

Section 2.6, “Document Control,” describes the SHINE process to control the review, approval, and distribution of documents, including changes thereto, which prescribe activities affecting quality. The program and implementing procedures will establish the requirements for identification, review and approval, and distribution of documents. Major changes to controlled documents will be reviewed and approved by the same organizations that performed the review of the original issue.

The staff determined that the SHINE document controls are consistent with the guidance provided in Section 12.9 of NUREG-1537, Parts 1 and 2, and ANSI/ANS-15.8-1995, and therefore acceptable.

Section 2.7, “Control of Purchased Items and Services,” describes the SHINE measures to ensure that purchased items and services conform to procurement documents. These measures include supplier evaluation and selection, source surveillance and inspection, and audits and review of supplier documents, as applicable.

The staff determined that the SHINE controls for purchased items and services are consistent with the guidance provided in Section 12.9 of NUREG-1537, Parts 1 and 2, and ANSI/ANS-15.8-1995, and therefore acceptable.

As described, in Section 2.7.1, “Supplier Selection,” the SHINE QAPD requires that the selection of suppliers be based on evaluation of their capabilities to provide items or services consistent with the requirements of the procurement documents.

In Section 2.7.2, “Work Control,” the SHINE QAPD requires that measures be established to control the supplier’s performance. Controls may include review of test plans and supplier’s

submitted documents, source surveillance and inspection, and other technical and administrative interfaces with the supplier, consistent with the procurement documents.

Section 2.7.3, “Verification Activities,” states that SHINE will require that suppliers verify and provide evidence of the quality of their products. SHINE will establish methods to control and approve supplier-generated documents. Based on the complexity of the product and importance to safety, SHINE will independently verify the quality of supplier’s product using source surveillances, inspections, audits, or review of supplier’s non-conformances, dispositions, waivers, and corrective actions.

Section 2.7.4, “Item or Service Acceptance,” describes the SHINE process to ensure that purchased items and services conform to procurement specifications. SHINE will use one or more of the following methods to accept and item or service: supplier Certificate of Conformance, source verification, receiving inspection, or post-installation test. Receiving inspection will include, as appropriate, verification by objective evidence such features as proper configuration, identification and cleanliness, shipping damage, and indication of fraud or counterfeit.

Section 2.8, “Identification and Control of Items,” describes the SHINE measures for item identification, traceability, and control purposes. The type of identification is established by specifications, codes, or standards. Items, including materials, will be identified by appropriate means. Where physical identification on the item is either impractical or insufficient, physical separation will be used. Items having a limited shelf and service life will be identified and controlled.

The staff determined that the SHINE controls for identification of items are consistent with the guidance provided in Section 12.9 of NUREG-1537, Parts 1 and 2, and ANSI/ANS-15.8-1995.

Section 2.9, “Control of Special Processes,” describes the SHINE measures to ensure that approved special process procedures are used by qualified personnel, and consistent with specified codes and standards, including acceptance criteria for the process. Special processes at SHINE will be controlled by instructions, procedures, drawings, checklists, travelers, or other appropriate means. Records for qualified personnel, processes, and equipment associated with special processes will be maintained, as appropriate.

The staff determined that the SHINE controls for special processes are consistent with the guidance provided in Section 12.9 of NUREG-1537, Parts 1 and 2, and ANSI/ANS-15.8-1995.

Section 2.10, “Inspections,” describes the SHINE inspection process to verify the quality and conformance of the item to specified requirements. The inspection process will be applicable to procurement, construction, modification, maintenance, and experiment fabrication. Inspections will be performed by persons other than those who performed the work being inspected, but may be from the same organization. Measuring and Test Equipment (M&TE) used to perform inspections will be identified in inspection documentation, for traceability of inspection results. Only items that have passed the required inspections and tests will be used, installed, or operated. Inspection results will be documented. Acceptance of items will be documented and approved by authorized personnel. Verification of conformance of work activities for the purpose of acceptance will be performed by qualified personnel.

SHINE will determine the need for formal training and conduct such training, as required, to qualify inspection and test personnel. SHINE will provide on-the-job training, as appropriate. Records of inspection personnel's qualification will be established and maintained by SHINE or the appropriate contractor.

The staff determined that the SHINE controls for inspection are consistent with the guidance provided in Section 12.9 of NUREG-1537, Parts 1 and 2, and ANSI/ANS-15.8-1995, and therefore acceptable.

Section 2.11, "Test Control," describes the SHINE measures to demonstrate that SSCs will perform satisfactorily in service. Test results will be documented and evaluated by a responsible authority to ensure that test requirements have been satisfied. Computer programs to be used for operational control will be tested consistent with an approved verification and validation plan and will demonstrate required performance over the range of operation of the controlled function or process.

The staff determined that the SHINE controls for testing are consistent with the guidance provided in Section 12.9 of NUREG-1537, Parts 1 and 2, and ANSI/ANS-15.8-1995, and therefore acceptable.

Section 2.12, "Control of Measuring and Test Equipment," describes the SHINE measures to ensure that tools, gauges, instruments, and other M&TE used for activities affecting quality are controlled, calibrated, or adjusted at specified periods, to maintain accuracy within specified limits.

Out-of-calibration devices will be tagged and segregated, until calibration has been restored. Records of calibration traceable to individual M&TE will be maintained. Calibration and control measures will not be required when normal commercial equipment provides adequate accuracy.

The staff determined that the SHINE controls for M&TE are consistent with the guidance provided in Section 12.9 of NUREG-1537, Parts 1 and 2, and ANSI/ANS-15.8-1995.

In Section 2.13, "Handling, Storage, and Shipping," the SHINE QAPD requires that handling, storage, and shipping of items be performed consistent with work and inspection instructions, drawings, specifications, shipping instructions, or other pertinent documents or procedures.

The staff determined that the SHINE controls for handling, storage, and shipping are consistent with the guidance provided in Section 12.9 of NUREG-1537, Parts 1 and 2, and ANSI/ANS-15.8-1995 and therefore acceptable.

In Section 2.14, "Inspection, Test, and Operating Status," the SHINE QAPD requires that the status of inspection and test activities be identified on the items or in documents traceable to the items. Identification of inspection and test status will ensure that required inspection and test were performed and prevent inadvertent installation or operation of items that have not passed the required inspections or tests.

The staff determined that the SHINE controls for inspection, test, and operating status are consistent with the guidance provided in Section 12.9 of NUREG-1537, Parts 1 and 2, and ANSI/ANS-15.8-1995 and therefore acceptable.

In Section 2.15, “Control of Nonconforming Items and Services,” the SHINE QAPD described the necessary measures to control nonconforming items, to prevent their inadvertent use or installation. These controls include measures for identification, documentation, evaluation, segregation (as appropriate), and disposition of nonconforming items. Recommended dispositions, such as “use-as-is,” “reject,” “repair,” or “rework,” will be identified, documented, and approved.

SHINE will document the technical justification for the acceptability of a nonconforming item dispositioned as “repair” or “use-as-is.” Non-conformances to design requirements of items dispositioned as “repair” or “use-as-is” will be subject to design control measures commensurate with those applied to the original design. Nonconforming items dispositioned as “repair” or “rework” will be re-examined consistent with applicable procedures and appropriate acceptance criteria.

The staff determined that the SHINE controls for nonconforming items and services are consistent with the guidance provided in Section 12.9 of NUREG-1537, Parts 1 and 2, and ANSI/ANS-15.8-1995 and therefore acceptable.

In Section 2.16, “Corrective Actions,” the SHINE QAPD requires that conditions adverse to quality be identified promptly and corrected as soon as practical. The corrective actions will be consistent with the design requirements, unless those requirements were faulty.

In the case of a significant condition adverse to quality, the cause of the condition will be investigated and corrective action to prevent recurrence will be taken.

The staff determined that the SHINE controls for corrective action are consistent with the guidance provided in Section 12.9 of NUREG-1537, Parts 1 and 2, and ANSI/ANS-15.8-1995 and therefore acceptable.

In Section 2.17, “Quality Records,” the SHINE QAPD describes the necessary measures to ensure that, at minimum, sufficient records of the following activities be maintained and appropriately stored: inspection and test results, results of quality assurance reviews, quality assurance procedure, and engineering reviews and analyses for design or changes and modifications. The SHINE records system or systems will be defined, implemented, and enforced consistent with written procedures, instructions, or other documentation.

Some records will be maintained by or for the plant owner for the life of the item while it is installed in the plant or stored for future use. Such records will be classified consistent with applicable documented classification criteria. Other records will be retained for a shorter period, as determined by SHINE.

Records will be stored in a location that provides damage prevention from moisture, temperature, and pestilence. Provisions will be specified for special processed records such as radiographs, photographs, negatives, microfilm, and magnetic media, to prevent damage. SHINE requires that records that be maintained by a supplier be accessible to SHINE.

The staff determined that the SHINE controls for quality records are consistent with the guidance provided in Section 12.9 of NUREG-1537, Parts 1 and 2, and ANSI/ANS-15.8-1995, and therefore acceptable.

In Section 2.18, “Assessments,” the SHINE QAPD describes the necessary measures for conducting periodic assessments of quality-affecting activities during design, construction, modification, and operations, to evaluate the effectiveness of the quality program implementation.

Assessments will be performed consistent with written procedures or checklists. Assessment results will be documented and reviewed by the management personnel responsible for the area assessed. Management of the assessed organization will investigate adverse findings and schedule corrective actions. The adequacy of the responses will be evaluated by the assessing organization. Assessment records will include plans, reports, written replies, and records of completion of corrective actions.

SHINE requires that personnel conducting assessments have the requisite training and experience.

The staff determined that the SHINE controls for assessments are consistent with the guidance provided in Section 12.9 of NUREG-1537, Parts 1 and 2, and ANSI/ANS-15.8-1995 and therefore acceptable.

Section 3, “Facility Operations,” of the SHINE QAPD describes the elements of a quality assurance program for conduct of operation at the SHINE facility. The SHINE QAPD also establishes that some requirements of the QA program for operations may be found in other documents, such as the Training Program, Emergency Plan, Security Plan, Technical Specifications, and the Radiation Protection Program, and would not be duplicated in the quality assurance program.

The information provided in Section 3, “Facility Operations,” of the SHINE QAPD, including its subsections, pertains to the operations of the SHINE facility, and specific details are not necessary for the issuance of a construction permit. Therefore, the staff has deferred a more detailed evaluation of this section until the receipt of an FSAR supporting an operating license application.

Section 5, “Decommissioning,” of the SHINE QAPD, pertains to decommissioning of the SHINE facility, and is not necessary for the issuance of a construction permit. SHINE stated in Section 5 of the SHINE QAPD that this section would be updated at a later date. Therefore, the staff has deferred the review of this section until the receipt of an FSAR supporting an operating license application. Following receipt of the SHINE FSAR, staff will confirm that this issue has been resolved.

On the basis of its review, the staff has determined the information to be included in SHINE FSAR Section 12.9, “Quality Assurance,” is sufficient and meet the applicable regulatory requirements and guidance for the issuance of a construction permit in accordance with 10 CFR 50.35.

12.4.10 Operator Training and Requalification

The staff evaluated the sufficiency of the SHINE operator training and requalification program, as described in SHINE PSAR Section 12.10, using the guidance and acceptance criteria from Section 12.10, “Operator Training and Requalification,” in NUREG-1537, Part 1 and 2.

As stated in SHINE PSAR Section 12.10, "[t]he SHINE facility operator training and requalification program will be described in the FSAR."

Per 10 CFR 50.34(b), the applicant does not need to address operator training considerations until the submission of its FSAR. As such, the staff has determined that it is not necessary for SHINE to submit an operator training and requalification program for its construction permit application. SHINE's operator training and requalification will be reviewed and evaluated when SHINE submits an FSAR for an operating license application.

Therefore, the staff finds that the review of SHINE's operator training and requalification program, as described in SHINE PSAR 12.10, can reasonably be left for later consideration in the evaluation of the SHINE FSAR.

12.4.11 Startup Plan

The staff evaluated the sufficiency of the preliminary design of the SHINE startup plan, as described in SHINE PSAR Section 12.11, using the guidance and acceptance criteria from Section 12.11, "Startup Plan," in NUREG-1537, Part 1 and 2.

As stated in SHINE PSAR Section 12.11, "The startup plan will be described in the FSAR."

The staff has considered this statement in the PSAR and determined, using the guidance in NUREG-1537, that this information is specific to the operation of the SHINE facility, and as such, is not necessary for the issuance of a construction permit.

Therefore, the staff finds deferring its review of the startup plan, as described in SHINE PSAR Section 12.11, can reasonably be left for later consideration in the evaluation of the SHINE FSAR.

12.4.12 Environmental Reports

Section 12.4.12, "Environmental Reports," has been superseded by Chapter 19, "Environmental Review."

SHINE's environmental report was provided as Chapter 19 of the SHINE PSAR.

Results of the staff's review of the environmental report is provided in the environmental impact statement contained in NUREG-2183, "Environmental Impact Statement for the Construction Permit for the SHINE Medical Radioisotope Production."

12.4.13 Material Control and Accounting Plan

The staff evaluated the sufficiency of the preliminary design of the SHINE material control and accounting (MC&A) plan, as described in SHINE PSAR Section 12.13, using the guidance and acceptance criteria from Section 12.13, "Material Control and Accounting Plan," in the ISG Augmenting NUREG-1537, Parts 1 and 2.

As stated in SHINE PSAR Section 12.13, "[t]he material, control, and accountability program will be provided in the FSAR."

The staff has considered the statement in the PSAR and determined that since SHINE has not requested a license for special nuclear material during construction, a material control and accounting plan is not necessary at this time. A material control and accounting plan will be necessary when SHINE applies for a license to possess special nuclear material.

Therefore, the staff finds deferring its review of SHINE's material control and accounting plan, as described in SHINE PSAR 12.13, can reasonably be left for later consideration in the evaluation of the SHINE FSAR or if SHINE applies for a license to possess special nuclear material.

12.5 Summary and Conclusions

SHINE PSAR Chapter 12 describes the conduct of operations for the IF and RPF, therefore, the technical evaluation of the SHINE conduct of operations, described in SHINE PSAR, Chapter 12, applies to both the IUs and RPF.

The staff evaluated the descriptions and discussions of the SHINE organization, including probable subjects of technical specifications, as described in Chapter 12 of the SHINE PSAR and supplemented by the applicant's responses to RAIs, and finds that the preliminary design of the SHINE organization meets the applicable guidelines of ISG Augmenting NUREG-1537, Part 2 and NUREG-1537, Part 2, as follows:

- The staff finds the information related to the review of SHINE PSAR Section 12.2, along with the responses to RAIs, is sufficient and meets the applicable regulatory requirements and guidance for the issuance of a construction permit. SHINE stated it would provide the remaining requested information in the SHINE FSAR. Therefore, further evaluation of this section will occur following the receipt of the SHINE FSAR, supporting an operating license application.

- The staff finds the information related to the review of SHINE PSAR Section 12.3, along with the responses to an RAI, is sufficient and meets the applicable regulatory requirements and guidance for the issuance of a construction permit. SHINE stated it would provide the remaining requested information in the SHINE FSAR. Therefore, further evaluation of this section will occur following the receipt of the SHINE FSAR, supporting an operating license application.

- The staff finds the information on required actions, reports, and records may reasonably be left for later consideration in the FSAR.

- The staff identified commitments related to the review of SHINE PSAR Section 12.7, "Emergency Planning," and the SHINE Preliminary Emergency Plan. The staff noted that the information in this section pertains more specifically to the operations of the SHINE facility, and the commitment items are not necessary to be resolved for the issuance of a construction permit. SHINE stated that it would provide the requested information in the SHINE Emergency Plan and FSAR supporting an operating license application. The staff finds that the information in this section meets the regulatory requirements and acceptance criteria for the issuance of a construction permit. Further evaluation of this section will occur following the receipt of the SHINE FSAR and Emergency Plan supporting an operating license application.

- The staff finds the information on security planning may reasonably be left for later consideration in the FSAR.

- The staff finds the information to be included in SHINE PSAR Section 12.9, “Quality Assurance,” is sufficient and meet the applicable regulatory requirements and guidance for the issuance of a construction permit, however, due to limited information provided in the SHINE PSAR regarding the SHINE quality assurance program requirements during operations and decommissioning, further evaluation of the SHINE QAPD will occur following the receipt of the SHINE FSAR.

- The staff finds the information on the operator training and requalification program, startup plan, and MC&A plan may reasonably be left for later consideration in the FSAR.

On the basis of these findings, the staff has made the following conclusions for of the issuance of a construction permit in accordance with 10 CFR 50.35 and 50.40:

(1) There is reasonable assurance that, taking into consideration the site criteria contained in 10 CFR Part 100, the proposed facility can be constructed and operated at the proposed location without undue risk to the health and safety of the public.

(2) There is reasonable assurance: (i) that the construction of the SHINE facility will not endanger the health and safety of the public, and (ii) that construction activities can be conducted in compliance with the Commission’s regulations.

(3) The issuance of a permit for the construction of the facility would not be inimical to the common defense and security or to the health and safety of the public.

13.0 ACCIDENT ANALYSES

The accident analysis shows that the health and safety of the public and workers are protected, potential radiological and non-radiological consequences have been considered in the event of malfunctions, and the facility is capable of accommodating disturbances in the functioning of structures, systems, and components. Additionally, the accident analysis demonstrates that the facility design features, safety limits, limiting safety system settings, and limiting conditions for operation have been selected to ensure that no credible accident could lead to unacceptable radiological consequences to people or the environment.

The accidents analyzed range from such anticipated events as a loss of normal electrical power to a postulated fission-product release with radiological consequences that exceed those of any accident considered to be credible. This limiting accident is named the maximum hypothetical accident (MHA). Because the MHA is not expected to occur, the scenario need not be entirely credible. The initiating event and the scenario details need not be analyzed, but the potential consequences should be analyzed and evaluated.

The accident analysis establishes safety limits for facility operations and provides a technical basis for control of those limits through technical specifications.

This chapter of the SHINE construction permit safety evaluation report (SER) describes the review and evaluation of the U.S. Nuclear Regulatory Commission (NRC) staff (the staff) of the preliminary accident analysis of the SHINE irradiation facility (IF) and radioisotope production facility (RPF), as presented in Chapter 13, "Accident Analysis," of the SHINE Preliminary Safety Analysis Report (PSAR), as supplemented by the applicant's responses to requests for additional information (RAIs). Together the IF and RPF constitute the SHINE facility.

13a Irradiation Facility Accident Analyses

Section 13a, "Irradiation Facility Accident Analysis," provides an evaluation of the preliminary accident analysis of SHINE's IF as presented in PSAR Section 13a2, "Irradiation Facility Accident Analysis," within which, SHINE describes accident-initiating events and scenarios, as well as the accident analysis and determination of consequences.

13a.1 Areas of Review

The staff reviewed SHINE PSAR Section 13a2 against the applicable regulatory requirements described in NRC regulatory guidance and standards to assess the sufficiency of the preliminary accident analysis. As part of this review, the staff evaluated descriptions and discussions of SHINE's accident analysis, with special attention to design and operating characteristics, unusual or novel design features, and principal safety considerations. The preliminary accident analysis was evaluated to ensure the sufficiency of principal design criteria; design bases; and information relative to materials of construction, general arrangement, and approximate dimensions sufficient to provide reasonable assurance that the final design will conform to the design basis. In addition, the staff reviewed SHINE's identification and justification for the selection of those variables, conditions, or other items that are determined to be probable subjects of technical specifications for the facility, with special attention given to those items that may significantly influence the final design. Structures, systems, and components (SSCs) were also evaluated to ensure that they would adequately provide for the

prevention of accidents and the mitigation of consequences of accidents. The staff considered the preliminary analysis and evaluation of the design and performance of the SSCs of the SHINE facility, including those SSCs shared by both the IF and RPF, with the objective of assessing the risk to public health and safety resulting from operation of the facility.

Areas of review for this section included accident-initiating events and scenarios, as well as the accident analysis and determination of consequences. Within these areas of review, the staff assessed the maximum hypothetical accident, target solution release into the irradiation unit (IU) cell, excess reactivity insertion accident, inadvertent criticality events, reduction in cooling, mishandling or malfunction of target solution, loss of off-site power, external events, mishandling or malfunction of equipment affecting the primary system boundary, large un-damped power oscillations, detonation and deflagration in the primary system boundary, unintended exothermic chemical reactions other than detonation, primary system boundary system interaction events, and facility-specific events.

13a.2 Summary of Application

The SHINE IF design has features that are important for understanding the accident analysis. The SHINE IF contains eight Irradiation Units (IUs). Each IU contains a neutron driver, a Target Solution Vessel (TSV), a TSV dump tank, and a TSV off-gas system (TOGS) which are all surrounded by thick concrete shielding. The TSV and TSV dump tank sit in the light water pool. The light water pool is a large pool of water that is cooled by the light water pool system (LWPS). The LWPS removes heat from the neutron driver accelerator target chamber, the neutron multiplier, and any other heat load on the pool such as radiation energy deposition. The primary closed loop cooling system (PCLS) circulates water past heat transfer surfaces to cool the TSV. The TOGS is in a concrete shielded cell. The TOGS circulates sweep gas through the gas space of the TSV. It recombines hydrogen and oxygen generated in the TSV by radiolysis and condenses water vapor from the TSV. The atmosphere in the TOGS shielded cell and above the light water pool is connected by ducts to the radiologically controlled area (RCA) ventilation Zone 1 (RVZ1). These ducts are a path for airborne radiation to escape from the IU and move into the ventilation system should a release from the TOGS occur. There are isolation dampers on the ducts that close in the event of a high radiation signal. There are also penetrations in the IUs that can be leakage paths for airborne radioactivity in the IU atmosphere to the RCA where the IUs are located. The building atmosphere in RVZ1 is vented to the outside through high-efficiency particulate air (HEPA) and charcoal filters.

SHINE PSAR Section 13a2 describes accident-initiating events and scenarios, as well as the accident analysis and determination of consequences for the SHINE IF. The application provides details on event categories covering credible accidents related to the IF, including the target solution and the accelerator; the maximum hypothetical accident intended to bound all credible accidents; limiting accidents; target solution release into the irradiation unit (IU) cell; excess reactivity insertion accident; inadvertent criticality events; reduction in cooling; mishandling or malfunction of target solution; loss of off-site power; external events; mishandling or malfunction of equipment affecting the primary system boundary; large un-damped power oscillations; detonation and deflagration in the primary system boundary; unintended exothermic chemical reactions other than detonation; primary system boundary system interaction events; and facility-specific events.

13a.3 Regulatory Basis and Acceptance Criteria

The staff reviewed SHINE PSAR Section 13a2 against applicable regulatory requirements, regulatory guidance, and standards, to assess the sufficiency of the preliminary accident analysis for the issuance of a construction permit. In accordance with paragraph (a) of Title 10 of the *Code of Federal Regulations* (10 CFR) 50.35, "Issuance of Construction Permits," a construction permit authorizing SHINE to proceed with construction may be issued once the following findings have been made:

(1) SHINE has described the proposed design of the facility, including, but not limited to, the principal architectural and engineering criteria for the design, and has identified the major features or components incorporated therein for the protection of the health and safety of the public.

(2) Such further technical or design information as may be required to complete the safety analysis, and which can reasonably be left for later consideration, will be supplied in the final safety analysis report (FSAR).

(3) Safety features or components, if any, which require research and development have been described by SHINE and a research and development program will be conducted that is reasonably designed to resolve any safety questions associated with such features or components.

(4) On the basis of the foregoing, there is reasonable assurance that: (i) such safety questions will be satisfactorily resolved at or before the latest date stated in the application for completion of construction of the proposed facility, and (ii) taking into consideration the site criteria contained in 10 CFR Part 100, the proposed facility can be constructed and operated at the proposed location without undue risk to the health and safety of the public.

With respect to the last of these findings, the staff notes that the requirements of 10 CFR Part 100 are specific to nuclear power reactors, and therefore not applicable to the SHINE facility. However, the staff evaluated SHINE's site specific conditions using site criteria similar to 10 CFR Part 100, by using the guidance in NUREG-1537. The staff's review evaluated the geography and demography of the site; nearby industrial, transportation, and military facilities; site meteorology; site hydrology; and site geology, seismology, and geotechnical engineering to ensure that issuance of the construction permit will not be inimical to public health and safety.

The staff's evaluation of the preliminary accident analysis does not constitute approval of the safety of any design feature or specification. Such approval will be made following the evaluation of the final design of the SHINE facility as described in the FSAR as part of SHINE's operating license application.

13a.3.1 Applicable Regulatory Requirements

The applicable regulatory requirements for the evaluation of SHINE's preliminary accident analysis are as follows:

- 10 CFR 50.34, "Contents of applications; technical information," paragraph (a), "Preliminary safety analysis report."

- 10 CFR 50.40, “Common Standards.”
- 10 CFR 20.1201, “Occupational dose limits for adults.”
- 10 CFR 20.1301, “Dose limits for individual members of the public.”

13a.3.2 Regulatory Guidance and Acceptance Criteria

In applying guidance and acceptance criteria, the staff used its judgment as to which acceptance criteria were relevant to SHINE’s proposed facility, as much of this guidance was originally developed for nuclear reactors. Given the similarities in SHINE’s proposed facility and non-power research reactors, the staff used established guidance documents and the Commission’s regulations to determine the acceptance criteria for demonstrating compliance with 10 CFR regulatory requirements. For example, the staff used:

- NUREG-1537, Part 1, “Guidelines for Preparing and Reviewing Applications for the Licensing of Non-Power Reactors, Format and Content,” issued February 1996 (Reference 4).
- NUREG-1537, Part 2, “Guidelines for Preparing and Reviewing Applications for the Licensing of Non-Power Reactors, Standard Review Plan and Acceptance Criteria,” issued February 1996 (Reference 5).
- “Final Interim Staff Guidance [ISG] Augmenting NUREG-1537, Part 1, ‘Guidelines for Preparing and Reviewing Applications for the Licensing of Non-Power Reactors: Format and Content,’ for Licensing Radioisotope Production Facilities and Aqueous Homogeneous Reactors,” dated October 17, 2012 (Reference 6).
- “Final Interim Staff Guidance Augmenting NUREG-1537, Part 2, ‘Guidelines for Preparing and Reviewing Applications for the Licensing of Non-Power Reactors: Standard Review Plan and Acceptance Criteria,’ for Licensing Radioisotope Production Facilities and Aqueous Homogeneous Reactors,” dated October 17, 2012 (Reference 7).

As stated in the ISG Augmenting NUREG-1537, the staff determined that certain guidance originally developed for heterogeneous non-power research and test reactors is applicable to aqueous homogenous facilities and production facilities. SHINE used this guidance to inform the design of its facility and prepare its PSAR. The staff’s use of reactor-based guidance in its evaluation of the SHINE PSAR is consistent with the ISG Augmenting NUREG-1537.

As appropriate, additional guidance (e.g., NRC regulatory guides, Institute of Electrical and Electronics Engineers (IEEE) standards, American National Standards Institute/American Nuclear Society (ANSI/ANS) standards) has been used in the staff’s review of SHINE’s PSAR. The use of additional guidance is based on the technical judgment of the reviewer, as well as references in NUREG-1537, Parts 1 and 2; the ISG Augmenting NUREG-1537, Parts 1 and 2; and the SHINE PSAR. Additional guidance documents used to evaluate SHINE’s PSAR are provided as references in Appendix B of this SER.

13a.4 Review Procedures, Technical Evaluation, and Evaluation Findings

The staff performed an evaluation of the technical information presented in SHINE PSAR Section 13a2, as supplemented by the applicant's responses to RAIs, to assess the sufficiency of the preliminary design and performance of SHINE's accident analysis in the IF for the issuance of a construction permit, in accordance with 10 CFR 50.35(a). The sufficiency of the SHINE preliminary accident analysis is determined by whether the design and performance meet applicable regulatory requirements, guidance, and acceptance criteria, as discussed in Section 13a.3, "Regulatory Basis and Acceptance Criteria," of this SER. While the technical evaluation of preliminary accident analysis provided in this section is specific to the SHINE IF, the staff's review considers the interface of accident scenarios between the IF and RPF as part of a comprehensive technical evaluation. The results of this technical evaluation are summarized in SER Section 13a.5, "Summary and Conclusions."

For the purposes of issuing a construction permit, the preliminary accident analysis may be adequately described at a conceptual level. The staff evaluated the sufficiency of the preliminary accident analysis based on the applicant's design methodology and ability to provide reasonable assurance that the final design will conform to the design bases with adequate margin for safety. As such, the staff's evaluation of the preliminary accident analysis does not constitute approval of the safety of any design feature or specification. Such approval will be made following the evaluation of the final design of the SHINE facility, as described in the FSAR, as part of SHINE's operating license application.

For SER Sections 13a.4.1 through 13a.4.14, the staff evaluated the sufficiency of the preliminary identification, analysis, and determination of consequences of accident-initiating events and scenarios, as described in SHINE PSAR Sections 13a2.1 and 13a2.2, in part, by reviewing the maximum hypothetical accident, inadvertent criticality events, reduction in cooling, mishandling or malfunction of target solution, loss of off-site power, external events, mishandling or malfunction of equipment affecting the primary system boundary, large undamped power oscillations, detonation and deflagration in the primary system boundary, unintended exothermic chemical reactions other than detonation, primary system boundary system interaction events, and facility-specific events, using the guidance and acceptance criteria from Sections 13a2, "Aqueous Homogeneous Reactor Accident Analyses," and 13a2.1, "Accident-Initiating Events and Scenarios," of the ISG Augmenting NUREG-1537, Parts 1 and 2.

For SER Sections 13a.4.1 through 13a.4.14, consistent with the review procedures in the ISG Augmenting NUREG-1537, Part 2, Sections 13a2 and 13a2.1, the staff followed the sequence of events in each accident scenario from initiation to stabilization. The staff evaluated credible accidents; instruments, controls and automatic protective systems assumed to be operating normally before an initiating event; the identification of single malfunctions; the discussion of sequence of events and components and systems damaged during the accident scenario; mathematical models and analytical methods employed; radiation source term; and that potential radiation consequences to the facility staff and public were presented and compared with acceptable limits. Additionally, the staff assessed whether the integrity of the primary system boundary would be maintained under credible accidents analyzed, determined whether all analyzed credible accidents have been categorized, confirmed that the applicant analyzed potential power instabilities, and confirmed that loss of normal electrical power and consequent reduction in cooling would not challenge the primary system boundary. Also, as described in SHINE PSAR Sections 13a2.1.12 and 13a2.2.12, "Facility-Specific Events," the applicant evaluated the SHINE facility for initiating events and possible design basis accidents that are possible because of the unique design features of the facility as specified by NUREG-1537 and

the ISG. The applicant identified and analyzed possible events and accidents that fall under this category. The applicant analyzed the consequences of the facility-specific initiating events and accidents proposed in the accident-initiating events section of the PSAR. These events are presented in Sections 13a.4.12 – 13a.4.14 in this SER.

13a.4.1 Maximum Hypothetical Accident

As described in SHINE PSAR Sections 13a2.1.1, "Maximum Hypothetical Accident," and 13a2.2.1, "Target Solution Release into the IU Cell," SHINE considered an MHA for the IF as well as the RPF. While an evaluation of the MHA for the IF is provided below, the RPF postulated MHA, as described in SHINE PSAR 13b.2.1, "Maximum Hypothetical Accident in the RPF," provides the bounding consequences to the public and is therefore considered the MHA for the SHINE facility. An evaluation of the RPF postulated MHA is provided in SER section 13b.4.3 of this SER.

SHINE postulated a non-specific large rupture of the TSV or dump tank for a single IU as the MHA for the Irradiation Facility (IF). Hypothetical causes for the rupture include corrosion, overpressure, maintenance or operational errors. However, as stated in SHINE PSAR, Section 13a2.1.1.1, "Initial Conditions and Assumptions," "[b]ecause the SHINE facility is being designed to withstand external events … scenarios that involve multiple IUs are not analyzed further." However, the staff noted that a group of similar systems or components failing together, as a result of a single external event, is still considered a single failure. Therefore, in RAI 13a2.1-1 (Reference 14), the staff requested that SHINE provide the basis for rejecting events that could affect multiple irradiation units. The ISG Augmenting NUREG-1537, Part 2, Section 13a2.1 recommends that external events affecting more than one unit be considered as a maximum hypothetical accident.

In response to this RAI (Reference 20) SHINE stated that the facility was designed as a robust structure to protect equipment contained within the seismic envelope from external events such as aircraft impact, tornado, flood, earthquake, or tornado missile, thus making an initiating event involving one or more irradiation units not credible. SHINE provided additional details on the robust design of the primary system boundary in response to RAI 13a.2.1-2 (Reference 20) by describing the application of relevant portions of American Society of Mechanical Engineers (ASME) Boiler and Pressure Vessel Code (BPVC) sections to the design of TSV, TOGS, and TSV dump tank.

The staff finds these responses satisfy the recommendation of the ISG Augmenting NUREG-1537, Part 2, Section 13a2.1 and demonstrate an adequate design basis to protect the irradiation units from external events and to ensure the integrity of the primary system boundary for a preliminary design. The staff will confirm that the final design conforms to this design basis during the evaluation of SHINE's FSAR.

For the analysis of the MHA, the following initial conditions were assumed, among others: (1) the presence of the maximum radioisotope inventory in the TSV, (2) the IU cell penetrations are sealed to be within design specifications, and (3) deactivation of the neutron driver. In the MHA scenario, the inventory of the TSV is instantaneously dumped into the IU cell and no credit is taken for light water pool scrubbing and the airborne material is released to the IU cell atmosphere. Fission products can be released to the environment through the facility stack through the RCA ventilation Zone 1 (RVZ1) flow path. The barriers to release are the filters in the RVZ1 and the inlet and outlet dampers of the IU cell. The isolation dampers close due to a

high radiation signal after about 1 percent of the airborne activity is released to RVZ1. The RVZ1 exhaust is equipped with two trains of HEPA filters and carbon adsorber beds that have assumed efficiencies of 99 percent for particulates and 95 percent for halogens. These efficiencies are expected to be degraded values compared to filter design values. For the MHA, it is assumed that 10 percent of the airborne activity is released to the RCA due to the leakage characteristics of the IU cell penetrations during the assumed 10 minute worker exposure time. This is the dominant dose to the workers. Radiation alarms are assumed to be operating and facility personnel are assumed to evacuate the area if an area radiation alarm is activated. Evacuation occurs after 25 percent of the activity leaves the TOGS.

There are five parameters used by the applicant to calculate the airborne and respirable source terms that affect the total effective dose equivalent (TEDE). The material at risk (MAR) is the total radionuclide source for the accident. The source term for the analysis is the TSV inventory after a certain number of irradiation cycles at a conservative power level and maximum fission product carryover. The damage ratio (DR) is the fraction of the MAR impacted by the accident scenario. The DR for the MHA is 1.0. The leak path factor (LPF) is the fraction of the radionuclide that is made airborne. The airborne release fraction (ARF) is the fraction of the material that can be suspended in the atmosphere as an aerosol and is subject to airborne transport. The respirable fraction (RF) is the fraction of airborne particles and aerosols that can be transported through the air and inhaled into the human respiratory system and is assumed to include all particles 10 microns and smaller. NRC staff requested, and SHINE provided the technical basis for these parameters in RAIs 13a2.2-1, 13a2.2-5, and 13a2.2-6 (References 14, and 16, respectively), and their associated responses (References 21, 27 and 24, respectively). This information is necessary to satisfy the acceptance criteria in the ISG Augmenting NUREG-1537, Part 2, Section 13a2, “Aqueous Homogeneous Reactor Accident Analyses,” which states that the applicant should include a systematic analysis and discussion of credible accidents for determining the limiting event in each category. The mathematical models and analytical methods employed, including assumptions, approximations, validation, and uncertainties, should be clearly stated in this analysis. The staff finds that the technical basis provided by SHINE satisfies the requirements discussed in the ISG Augmenting NUREG-1537, Part 2, Section 13a2 and demonstrates an adequate design basis for a preliminary design. The staff will confirm that the final design conforms to this design basis during the evaluation of SHINE’s FSAR.

The elevation of the exhaust stack is 66 feet above the site grade. The site boundary is approximately 300-350 yards from the exhaust stack and the nearest residence is 0.5 miles from the facility.

In the course of review of SHINE’s description of the radiological dose consequence analysis, the staff determined that additional information was needed to determine the adequacy of SHINE’s radiological dose consequence analysis. Therefore, in RAIs 13a2.2-4 and 13a2.2-7 (References 14 and 17), the staff requested that SHINE provide information on dose calculations, including a description of the methods and codes used, important input parameter values, and calculated values of dose components. This information was necessary to satisfy the requirements discussed in the ISG Augmenting NUREG-1537, Part 2, Section 13a2, related to the demonstration of a systematic analysis of accidents, as described above. In response to these RAIs, (Reference 21 and 24), SHINE provided information related to important assumptions for radiological dose calculations, dose calculation methodology, internal dose, external dose equivalent, organ dose, off-site dose, input parameter values, and dose calculation results. The staff finds that descriptions of methods and codes used, input parameter values, and calculated values of dose components provided by SHINE in response to

these RAIs satisfies the requirements discussed in the ISG Augmenting NUREG-1537, Part 2, Section 13a2 and demonstrates an adequate design basis for a preliminary design. The staff will confirm that the final design conforms to this design basis during the evaluation of SHINE's FSAR.

SHINE calculated that the dose consequences of the MHA are calculated to be within the regulatory limits of 10 CFR Part 20. A TEDE of 3.06 rem was calculated for the workers at the facility. This on-site dose is less than the 5 rem regulatory limit specified in 10 CFR 20.1201. A TEDE of 0.0165 rem is calculated for a member of the public at the site boundary, and a TEDE of 0.0023 rem is calculated at the nearest residence. The off-site doses are less than the 0.1 rem regulatory limit specified in 10 CFR 20.1301. The NRC staff will confirm these calculations prior to issuing an operating license, but the results do not need to be confirmed for issuing a construction permit.

Because the assumptions of the scenario are bounding, the doses calculated will likely not be exceeded by any accident considered credible. The applicant has also examined more realistic assumptions about operating time and release fractions that decreased the source term significantly, compared to the one calculated for the MHA, lowering the maximum doses by a factor of 2 for workers and a factor of 7.5 for members of the public. The staff finds that for the IF MHA, the health and safety of the facility staff and the public are protected.

On the basis of its review, the staff has determined that the level of detail provided on SHINE's MHA demonstrates an adequate design basis for a preliminary design and satisfies the applicable acceptance criteria of the ISG Augmenting NUREG-1537, Part 2, Section 13a2, allowing the staff to make the following relevant findings:

(1) The facility power and power density are sufficiently low such that insufficient energy is available to drive a large energetic release of radioactive material, as could occur in a nuclear power reactor. The analysis of the MHA is sufficiently conservative in that it does not take credit for certain mechanisms that would limit the release of fission products in a credible release. Any credible release from the irradiation units will go into the light water pool, which should provide scrubbing and control the release rates of iodine and bromine. The predominant form of iodine in the light water pool and its volatility will depend on the pH of the pool, which will be evaluated during the final design of the LWPS. The pH of an aqueous solution generally determines whether iodine is in a non-volatile (I-) or volatile (I2) form. In acidic conditions I2 is preferred resulting in transfer of iodine to the gaseous phase. If organics are present they can react with iodine to form organic iodides some of which can also transfer to the gaseous phase. Judging from the behavior of organic iodine Radioiodine Test Facility (RTF) tests described in the Behavior of Iodine Project Final Summary Report, NEA/CSNI/R(2011)11 (https://www.oecd-nea.org/nsd/docs/2011/csni-r2011-11.pdf), the organic iodide concentration seems to follow the same trends as I2. The organic iodide concentration decreases along with the reduction in the molecular iodine (I2) concentration with increasing pH. This reduction of the organic iodide concentration suggests that controlling pH would similarly control the organic iodide production and potential release to the gas phase. The radiolytic degradation of certain organics was also observed to influence pH. The RTF experiments were intended to represent containment sump water. It is therefore possible that additional reactions may alter the organic iodide behavior observed in the RTF tests. The potential for change in releases should be examined in more detail considering composition of and the organic contaminants expected in the TSV solution when final design information

becomes available in the operating license review. While the applicant has not provided the anticipated pH of the light water pool in the IU following the postulated accident in which the entire contents of the TSV are released, the volume of the pool would increase the pH of the mixture, limiting potential releases by this pathway. Iodine releases would also be controlled by adsorption on the walls of the light water pool, as well as the mixing in the pool and transport of iodine to the gas space.

(2) The exposure time of workers is assumed to be 10 minutes which is conservative for workers trained to evacuate in the event of a radiological release.

(3) For the preliminary design, the air handling and filtering systems are assumed to function as designed and described in the SHINE PSAR. Realistic methods were used to compute external radiation doses and dose commitments resulting from inhalation by the facility staff. As described in SHINE PSAR Chapter 11, "Radiation Protection Program and Waste Management," and supplemented by responses to RAIs, realistic but conservative methods are used to compute potential doses and dose commitments to the public in the unrestricted area. The methods of calculating doses from inhalation or ingestion (or both) and direct shine of gamma rays from dispersing plumes of airborne radioactive material are appropriate for a preliminary facility design.

(4) An MHA, which is an accident that would release fission products from target solution and would have consequences greater than any credible accident, has been analyzed. The MHA scenario is credible, but the combination of bounding conditions analyzed are beyond what is assumed for design basis accidents. The IF MHA serves as a bounding accident analysis for the IF.

(5) Because the assumptions of the scenario are bounding, the doses calculated will likely not be exceeded by any accident considered credible. The applicant has also examined more realistic assumptions about operating time and release fractions that decreased the source term significantly compared to the one calculated for the MHA, lowering the maximum doses by a factor of 2 for workers and a factor of 7.5 for members of the public. Thus, even for the IF MHA, the health and safety of the facility staff and the public are protected.

Based on the above, the staff finds that the preliminary analysis of the MHA, as described in SHINE PSAR Sections 13a2.1.1 and 13a2.2.1, and supplemented by the applicant's responses to RAIs, is sufficient and meets the applicable regulatory requirements and guidance for the issuance of a construction permit in accordance with 10 CFR 50.35 and 50.40. Further technical or design information required to complete the safety analysis may reasonably be left for later consideration. The staff will confirm that the final design conforms to the design basis during the evaluation of SHINE's FSAR.

13a.4.2 Insertion of Excess Reactivity/Inadvertent Criticality

In SHINE PSAR Sections 13a2.1.2, "Insertion of Excess Reactivity/Inadvertent Criticality," and 13a2.2.2, "Excess Reactivity Insertion Accident," the applicant examined modes of operation including the fill process, the cold target solution prior to starting the neutron driver, and irradiation operations after the neutron driver is activated. The TSV is expected to operate in a subcritical condition during all modes of operation through a combination of automatic safety systems and administrative controls, including a passive standpipe overflow system and fill rate

limits. The k_{eff} is expected to be at a maximum at the end of the filling mode. The k_{eff} will be reduced during irradiation operations due to void and temperature feedback in the target solution.

SHINE selected and analyzed three potential events, which could result in the insertion of excess reactivity:

A. Increase in the target solution density during operations due to void collapse.
B. Reduction in the target solution temperature due to excessive cooling.
C. Injection of additional target solution beyond the targeted fill volume during startup and irradiation operations.

SHINE PSAR Section 13a2.1.2.1, "Identification of Causes, Initial Conditions, and Assumptions," discusses the insertion of excess reactivity. Since the system is over-moderated, decreasing the density of the coolant or introducing voids in the primary closed loop cooling system (PCLS) would result in a negative reactivity insertion. In its review of SHINE's analysis of potential events which could result in an insertion of excess reactivity, the staff determined that additional information was necessary to determine whether certain events had been considered, which could result in an insertion of reactivity and/or inadvertent criticality event. Therefore, in RAIs 13a2.1-3 through 5 and 13a2.2-2 (Reference 14), the staff requested that SHINE provide additional information on: (1) whether a decrease in coolant density or introduction of voids in the PCLS has been analyzed as a possible accident scenario, (2) whether a TOGS condenser heat exchanger (HX) failure or recombiner HX failure and water ingress had been considered as a possible accident scenario, (3) the expected reactivity insertion, following the maximum credible deflagration, and (4) what features limit a temperature drop in the subcritical assembly to 5 degrees C to prevent a criticality event. This information is necessary to satisfy the requirements discussed in the ISG Augmenting NUREG-1537, Part 2, Section 13a2, "Aqueous Homogeneous Reactor Accident Analyses," which states that the applicant should include a systematic analysis and discussion of credible accidents for determining the limiting event in each category. The mathematical models and analytical methods employed, including assumptions, approximations, validation, and uncertainties, should be clearly stated in this analysis.

In response to RAI 13a2.1-3 (Reference 21), SHINE performed a calculation of the expected reactivity changes due to voiding out the PCLS from nominal coolant temperature and density to a fully voided cooling system and found that there is a negative insertion of reactivity as the percent of voids increased. The highest k_{eff} for both Mode 1 and Mode 2 conditions occurred when there were no voids present in the PCLS.

In response to RAI 13a2.1-4 (Reference 21), SHINE stated that the TOGS condenser heat exchanger failure and recombiner heat exchanger failure and water ingress had been considered as possible accident scenarios. SHINE performed calculations showing that these events would result in a dilution of the TSV solution and rise in TSV solution level, resulting in a reactivity decrease.

In response to RAI 13a2.1-5 (Reference 21), SHINE calculated the expected reactivity insertion from the maximum credible deflagration and found that the increase in solution concentration due to water loss combined with the maximum deflagration event did not result in a k_{eff} greater than that occurring during cold startup. The calculation was performed using MCNP5, version 1.60, and the SHINE best-estimate neutronics model.

In response to RAI 13a2.2.-2 (Reference 20), SHINE described two features that limit the temperature drop in the subcritical assembly during startup: temperature detection of the PCLS and neutron flux monitoring of the subcritical assembly. Furthermore, SHINE stated that "[a]ssuming the least negative initial reactivity and the limiting TSV temperature reactivity coefficient, the TSV temperature would have to drop approximately 6°C before reaching criticality."

The staff finds these responses satisfy the requirements discussed in the ISG Augmenting NUREG-1537, Part 2, Section 13a2 and demonstrate an adequate design basis to protect the irradiation units from an insertion of reactivity event and inadvertent criticality event for a preliminary design. The staff will confirm that the final design conforms to this design basis during the evaluation of SHINE's FSAR.

On the basis of its review, the staff has determined that the level of detail provided on SHINE's insertion of reactivity and inadvertent criticality events demonstrates an adequate design basis for a preliminary design and satisfies the applicable acceptance criteria of the ISG Augmenting NUREG-1537, Part 2, Section 13a2, allowing the staff to make the following relevant findings:

(1) Reactivity insertion events have been identified and analyzed. None of these events would lead to challenges to the integrity of the primary system boundary or increase the release of radiation from the irradiation units. The SHINE irradiation units are designed to operate with a significant margin to criticality in all modes of operation. The physical design features, safety system trips, technical specifications and administrative controls will ensure that the system remains subcritical in all modes of operation. There is no scenario that allows a large and rapid reactivity insertion similar to a control rod ejection event in a reactor. While SHINE did not analyze an event that would cause a criticality, in the unlikely event that all safety trips and administrative controls failed and resulted in a SHINE IU criticality, the response of critical aqueous homogenous reactors to reactivity insertions is well understood and should not lead to any challenges to the integrity of the primary system boundary.

(2) There are no dose consequences identified for either on-site workers or the public. The consequences of excess reactivity insertion accidents have been analyzed and shown to be bounded by the MHA. Radiation doses to the public and staff will be within acceptable limits, and the health and safety of the staff and public will be adequately protected.

Therefore, the staff finds that the preliminary analysis of the insertion of reactivity and inadvertent criticality events, as described in SHINE PSAR Sections 13a2.1.2 and 13a2.2.2, and supplemented by the applicant's responses to RAIs, is sufficient and meets the applicable regulatory requirements and guidance for the issuance of a construction permit in accordance with 10 CFR 50.35 and 50.40. Further technical or design information required to complete the safety analysis may reasonably be left for later consideration. The staff will confirm that the final design conforms to the design basis during the evaluation of SHINE's FSAR.

13a.4.3 Reduction in Cooling

In SHINE PSAR Sections 13a2.1.3 and 13a2.2.3, "Reduction in Cooling," the applicant evaluated a reduction in cooling to the neutron driver, the neutron multiplier, and to the TSV, which contains the target solution. The IU and TSV are cooled by the PCLS and the LWPS.

The PCLS removes heat from the TSV by circulation coolant. The LWPS cools the pool surrounding the TSV.

Several scenarios were identified that would lead to a reduction in cooling event including a loss-of-offsite-power (LOOP) event, flow blockages, equipment malfunctions or damage, or operator errors. The applicant postulated reduction in cooling events with both operating and de-energized neutron drivers. The applicant performed a detailed analysis of three potential scenarios that could result in a reduction in cooling:

A. A LOOP resulting in a loss of the PCLS, LWPS and the neutron driver.
B. Loss of PCLS due to a blockage, malfunction, damage, or operator error with the neutron driver still operating.
C. Loss of PCLS and LWPS due to an electrical failure or operator error with the neutron driver still operating.

The staff determined that these scenarios cover a representative sample of possible reduction in cooling scenarios and should provide representative results for the range of safety margins and consequences seen in actual reduction of cooling events during facility operations. For all of these scenarios the TRPS system trips on a loss of cooling and target solution is transferred to the TSV dump tank. However, the staff determined that additional information was needed to understand the basis for SHINE PSAR Section 13a2.1.3.1, “Identification of Causes, Initial Conditions, and Assumptions,” stating that Scenario C was a low probability event not expected to occur during the facility lifetime. Therefore, SHINE was asked to provide a technical basis for this claim in RAI 13a2.1-6 (Reference 14). This information is necessary to satisfy the requirements discussed in the ISG Augmenting NUREG-1537, Part 2, Section 13a2, which states that the applicant should include a systematic analysis and discussion of credible accidents for determining the limiting event in each category. The mathematical models and analytical methods employed, including assumptions, approximations, validation, and uncertainties, should be clearly stated in this analysis.

In response to RAI 13a2.1-6 (Reference 21), SHINE stated that multiple unlikely simultaneous failures would be required to result in continued operation of the neutron driver during the loss or reduced PCLS and LWPS flow. The neutron driver would be de-energized during both a LOOP and during a loss or reduction of PCLS flow below the trip setpoint.

The staff finds that this response satisfies the requirements discussed in the ISG Augmenting NUREG-1537, Part 2, Section 13a2 and demonstrates an adequate design basis to protect the irradiation units from a reduction in cooling event for a preliminary design. The staff will confirm that the final design conforms to this design basis during the evaluation of SHINE’s FSAR.

On the basis of its review, the staff has determined that the level of detail provided on SHINE’s reduction of cooling scenarios demonstrates an adequate design basis for a preliminary design and satisfies the applicable acceptance criteria of the ISG Augmenting NUREG-1537, Part 2, Section 13a2, allowing the staff to make the following relevant findings:

(1) Reduction in cooling events have been identified and analyzed. The level of decay heat produced by the target solution is relatively low compared to the heat removal capabilities of the cooling systems. The relatively large volume of water in the light water pool provides an adequate heat sink and heat removal capacity whether or not the LWPS system is operable.

(2) There are no dose consequences for either on site workers or the public. The consequences of reduction in cooling events have been analyzed and shown to be bounded by the MHA. Radiation doses to the public and staff will be within acceptable limits, and the safety and health of the staff and public will be adequately protected.

Therefore, the staff finds that the preliminary analysis of the reduction in cooling scenarios, as described in SHINE PSAR Sections 13a2.1.3 and 13a2.2.3, and supplemented by the applicant's response to an RAI, is sufficient and meets the applicable regulatory requirements and guidance for the issuance of a construction permit in accordance with 10 CFR 50.35 and 50.40. Further technical or design information required to complete the safety analysis may reasonably be left for later consideration. The staff will confirm that the final design conforms to the design basis during the evaluation of SHINE's FSAR.

13a.4.4 Mishandling or Malfunction of Target Solution

SHINE PSAR Sections 13a2.1.4 and 13a2.2.4, "Mishandling or Malfunction of Target Solution," describe the IF as containing a liquid uranyl sulfate target solution that may include radioactive fission products. This accident category includes events that involve the mishandling of the target solution and the failure of the primary system boundary within the IF. The solution may be contained within the target solution hold tank, the TSV, TSV dump tank, or any of associated piping in the system. The applicant considered four general scenarios that qualitatively differ by where the target solution goes. In the TSV overfill scenario, the excess target solution goes into the dump tank and there is no leakage outside of the primary pressure boundary. A TSV or dump tank leak into the light water pool was considered where the solution enters the pool and pool cooling system. Fission products in the pool could also enter the IU atmosphere above the pool and be released into RVZ1 and the RCA as in the MHA for the IF. The release rate is much slower than the MHA and credit is given for fission product scrubbing in the pool. A TSV leak into the primary cooling system would allow radioactive water to exit the IU cell, but still remain in the closed PCLS. The PCLS is normally operating at a higher pressure than the TSV, so the expected direction of leakage is from the PCLS to the TSV.

A dump tank pipe leak in the IU cell atmosphere was considered to be the limiting event in this category. In this event, there would not be fission product scrubbing by the pool. This event is similar but less severe than the MHA since the leak rate is slower than the instantaneous loss of all target solution in the MHA. Assumptions used in the accident analysis are:

- The scenario analyzed by the applicant starts with a pipe break in the TSV dump tank outlet piping and 25 percent of the inventory is released into the IU cell gas space.
- The facility is evacuated after 25 percent of the TSV inventory enters the IU cell.
- A high radiation signal activates the isolation dampers after 1 percent of the total activity is released into RVZ1.
- The airborne activity is filtered before being released to the environment.
- Ten percent of the activity in the shielded cell is released into the RCA through penetration leakage.

- Radiation alarms in the facility are operating to notify personnel in the area of the release.

- Facility personnel evacuate the area when the radiation alarm activates.

The airborne activity is released to an IU cell gas space. One percent of the activity is released to RVZ1 before the IU cell isolation dampers are closed. The airborne activity in RVZ1 is released to the environment through HEPA and carbon adsorber beds with assumed removal efficiencies of 99 percent or particulates and 95 percent of halogens. Ten percent of the IU cell activity is released to the RCA through IU cell penetrations.

The dose consequences of the TSV dump tank exit piping rupture are calculated to be within the regulatory limits of 10 CFR Part 20. A TEDE of 1.50 rem is calculated for the workers at the facility. This on-site dose is less than the 5 rem regulatory limit specified in 10 CFR 20.1201. A TEDE of 0.0022 rem is calculated for a member of the public at the site boundary, and a TEDE of 0.0003 rem is calculated at the nearest residence. The off-site doses are less than the 0.1 rem regulatory limit specified in 10 CFR 20.1301.

On the basis of its qualitative review, the staff finds that the level of detail provided on SHINE's mishandling or malfunction of target solution event demonstrates an adequate design basis for a preliminary design and satisfies the applicable acceptance criteria of the ISG Augmenting NUREG-1537, Part 2, Section 13a2, allowing the staff to make the following relevant findings:

(1) Mishandling and malfunction of the target solution scenarios have been identified and analyzed. The facility power and power density are sufficiently low such that insufficient energy is available to drive a large energetic release of radioactive material, as could occur in a nuclear power reactor. Any release in this scenario will enter into the gas space of the IU. Iodine releases would be controlled by adsorption on the walls of the light water pool, as well as the mixing in the pool and transport of iodine to the gas space.

(2) The exposure time of workers is assumed to be 10 minutes, which is conservative for workers trained to evacuate in the event of a radiological release.

(3) The applicant adequately considered the consequences of target solution mishandling and malfunction events. Because the assumptions of this scenario are bounding, the doses calculated for this event are conservative. More realistic assumptions about the release fractions would decrease the source term significantly compared to the source term assumed for this scenario. The consequences of the IF mishandling or malfunction of target solution event have been analyzed and shown to be bounded by the MHA. Radiation doses to the public and staff will be within acceptable limits, and the safety and health of the staff and public will be adequately protected.

Therefore, the staff finds that the preliminary analysis of the IF mishandling or malfunction of target solution event, as described in SHINE PSAR Sections 13a2.1.4 and 13a2.2.4, is sufficient and meets the applicable regulatory requirements and guidance for the issuance of a construction permit in accordance with 10 CFR 50.35 and 50.40. Further technical or design information required to complete the safety analysis may reasonably be left for later consideration. The staff will confirm that the final design conforms to the design basis during the evaluation of SHINE's FSAR.

13a.4.5 Loss of Electrical Power

In SHINE PSAR Sections 13a2.1.5 and 13a2.2.5, “Loss of Off-Site Power,” the applicant examined a total LOOP to the facility for an extended period of time with conservative operating conditions as an event that bounds all other loss of power events in the facility. An uninterruptable power supply system (UPSS) is available to supply battery power for essential loads for at least 2 hours. The neutron driver shuts down on LOOP. The UPSS powers the TOGS to remove hydrogen generated by radiolysis. The UPSS does not provide power for the heat removal systems connected to the TOGS. The decay heat is low and can be transferred to the light water pool through natural convection. The heat capacity of the pool is large enough that the pool temperature will increase by only 11.8 °F from 90 days of decay heat load.

On the basis of its review, the staff has determined that the level of detail provided in SHINE’s LOOP analysis demonstrates an adequate design basis for a preliminary design and satisfies the applicable acceptance criteria of the ISG Augmenting NUREG-1537, Part 2, Section 13a2, allowing the staff to make the following relevant finding:

> There are no dose consequences for either on site workers or the public. While the applicant has not provided an analysis of the impact of the loss of the heat removal systems on the integrity of the TOGS pressure boundary, the event would still be bounded by the MHA. The consequences of reduction in cooling events from loss of offsite power have been analyzed and shown to be bounded by the MHA. Radiation doses to the public and staff will be within acceptable limits, and the safety and health of the staff and public will be adequately protected.

Therefore, the staff finds that the preliminary analysis of the IF LOOP, as described in SHINE PSAR Sections 13a2.1.5 and 13a2.2.5, is sufficient and meets the applicable regulatory requirements and guidance for the issuance of a construction permit in accordance with 10 CFR 50.35 and 50.40. Further technical or design information required to complete the safety analysis may reasonably be left for later consideration. The staff will confirm that the final design conforms to the design basis during the evaluation of SHINE’s FSAR.

13a.4.6 External Events

In SHINE PSAR Sections 13a2.1.6 and 13a2.2.6, “External Events,” the applicant has identified seismic events, tornados or high winds, and a small aircraft crash as external events that can affect the IF. These are treated as design basis accidents for the facility. Flooding has been ruled out due to the site location. The SHINE facility has been designed to survive design basis earthquake, tornado and wind loads including missiles, and aircraft impacts and keep the facility safety functions intact.

On the basis of its review, the staff has determined that the level of detail provided on SHINE’s external events discussion demonstrates an adequate design basis for a preliminary design and satisfies the applicable acceptance criteria of the ISG Augmenting NUREG-1537, Part 2, Section 13a2, allowing the staff to make the following relevant finding:

> Chapters 2, “Site Characteristics,” and 3, “Design of Structures, Systems, and Components,” of the PSAR adequately discuss the preliminary design of the SHINE facility and its ability to withstand external events and the potential associated accidents. The SHINE facility is adequately designed to accommodate these events. For events that cause facility damage, the damage is within the bounds discussed for other

accidents in this chapter and does not result in dose consequences. The consequences of all DBA external events have been analyzed and shown to be bounded by the MHA. Radiation doses to the public and staff will be within acceptable limits, and the safety and health of the staff and public will be adequately protected.

Therefore, the staff finds that the preliminary analysis of external events, as described in SHINE PSAR Sections 13a2.1.6 and 13a2.2.6, is sufficient and meets the applicable regulatory requirements and guidance for the issuance of a construction permit in accordance with 10 CFR 50.35 and 50.40. Further technical or design information required to complete the safety analysis may reasonably be left for later consideration. The staff will confirm that the final design conforms to the design basis during the evaluation of SHINE's FSAR.

13a.4.7 Mishandling or Malfunction of Equipment

In SHINE PSAR Sections 13a2.1.7 and 13a2.2.7, "Mishandling or Malfunction of Equipment Affecting the PSB," the applicant examined scenarios where mishandling of malfunction of equipment could lead to an accident where workers or the public are exposed to radiation. This includes scenarios where the PSB is not maintained. Some of those that could lead to a release of the target solution have already been examined in Section 13a2.1.4 of the PSAR. This section examines scenarios that could lead to radiation exposure including the release of radioactive gases.

The malfunctions of three systems were identified for further analysis. Events involving the Neutron Driver Assembly System (NDAS) and the tritium purification system (TPS) were identified as possible scenarios. Those scenarios include inadvertent actuation of the neutron driver, misalignment of the accelerator, and loss of tritium. There are specific design and safety system features that minimize the potential for events involving those systems. They are not the limiting events but they are analyzed further in facility specific events category which is described in PSAR Section 13a2.1.12.

A scenario where there is an inadvertent purge of the radioactive gases from the TOGS has been determined to be the limiting event in this category. The TOGS contains an inventory of radioactive fission product gases that build up over the irradiation cycle. Part of the iodine is removed by the zeolite beds that are part of the TOGS system. Gas is purged from the TOGS to the Noble Gas Removal System after an irradiation cycle. This scenario assumes that a malfunction or human error releases radioactive gas in one IU from the TOGS into the shielded cell that encloses the TOGS. Assumptions used in the accident analysis are:

- The scenario analyzed by the applicant starts with a pipe rupture in the TOGS and the complete release of the off gas into the TOGS shielded cell.
- The facility is evacuated after 25 percent of the TOGS radioactivity enters the shielded cell.
- A high radiation signal activates the isolation dampers after 1 percent of the total activity is released into RVZ1.
- The airborne activity is filtered before being released to the environment.

- Ten percent of the activity in the shielded cell is released into the RCA through penetration leakage.
- Radiation alarms in the facility are operating to notify personnel in the area of the release.
- Facility personnel evacuate the area when the radiation alarm activates.

The radioactive gas is released to a TOGS cell gas space. One percent of the activity is released to RVZ1 before the IU cell isolation dampers are closed. The airborne activity in RVZ1 is released to the environment through HEPA and carbon adsorber beds with assumed removal efficiencies of 99 percent of particulates and 95 percent of halogens. Ten percent of the IU cell activity is released to the RCA through IU cell penetrations.

The applicant calculated that the dose consequences of the TOGS piping rupture are calculated to be within the regulatory limits of 10 CFR Part 20. A TEDE of 1.87 rem is calculated for the workers at the facility. This on-site dose is less than the 5 rem regulatory limit specified in 10 CFR 20.1201. A TEDE of 0.0159 rem is calculated for a member of the public at the site boundary, and a TEDE of 0.0022 rem is calculated at the nearest residence. The off-site doses are less than the 0.1 rem regulatory limit specified in 10 CFR 20.1301.

On the basis of its review, the staff has determined that the level of detail provided on mishandling or malfunction of equipment demonstrates an adequate design basis for a preliminary design and satisfies the applicable acceptance criteria of the ISG Augmenting NUREG-1537, Part 2, Section 13a2, allowing the staff to make the following relevant findings:

(1) Mishandling and malfunction of equipment scenarios have been identified and analyzed. The facility power and power density are sufficiently low such that insufficient energy is available to drive a large energetic release of radioactive material, as could occur in a nuclear power reactor. Any release in this scenario will enter into the gas space of the IU. Iodine releases would be controlled by adsorption on the walls of the light water pool, as well as the mixing in the pool and transport of iodine to the gas space.

(2) The exposure time of workers is assumed to be 10 minutes, which should be conservative for workers trained to evacuate in the event of a radiological release.

(3) The applicant adequately considered the consequences of target solution mishandling and malfunction events. Because the assumptions of the scenario are bounding, the doses calculated for this event will be conservative. More realistic assumptions about the release fractions would decrease the source term significantly compared to the source term assumed for this scenario. The consequences of the IF mishandling or malfunction of equipment affecting the PSB event have been analyzed and shown to be bounded by the MHA. Radiation doses to the public and staff will be within acceptable limits, and the safety and health of the staff and public will be adequately protected.

Therefore, the staff finds that the preliminary analysis of mishandling or malfunction of equipment events, as described in SHINE PSAR Sections 13a2.1.7 and 13a2.2.7, is sufficient and meets the applicable regulatory requirements and guidance for the issuance of a construction permit in accordance with 10 CFR 50.35 and 50.40. Further technical or design

information required to complete the safety analysis may reasonably be left for later consideration. The staff will confirm that the final design conforms to the design basis during the evaluation of SHINE's FSAR.

13a.4.8 Large Undamped Power Oscillations

SHINE PSAR Sections 13a2.1.8 and 13a2.2.8, "Large Undamped Power Oscillations," describe the conditions when power oscillations may occur in the TSV in response to natural fluctuations in the target solution that result in fluctuations in reactivity. The size of the power oscillations will be determined by the physical characteristics of the system and any control inputs or changes to the TSV boundary conditions including the neutron driver, the primary heat exchanger, the autocatalytic recombiner, and the condenser. However, the operating conditions of the TSV and TOGS should not lead to large undamped power oscillations.

The applicant identified radiolytic bubble formation and transport, target solution spatial variations and circulation, neutron driver variation, and excessive reactivity insertions as possible causes of oscillations. The SHINE TSV operates at power densities significantly below the 1.8 kWt/L threshold observed to cause significant power oscillations in aqueous homogeneous reactors. The low operating power density and the subcritical driven operation should prevent large power oscillations. However, the NRC staff determined that additional information was necessary to verify that the TSV would not become critical during operation. Therefore, in RAI 13a2.1-7 (Reference 14), the NRC staff requested that SHINE provide the expected magnitude of potential power oscillations, and a description of the mechanisms that are in place to ensure that they are "self-limiting." This information is necessary to satisfy the requirements discussed in the ISG Augmenting NUREG-1537, Part 2, Section 13a2, which states that the applicant should include a systematic analysis and discussion of credible accidents for determining the limiting event in each category. In response to this RAI (Reference 21), SHINE provided a stability analysis of the accelerator driven system that was performed by Los Alamos National Laboratory (LANL) and documented in the report LA-UR-14-28684, "STABILITY OF FISSILE SOLUTION SYSTEMS." The LANL stability analysis showed that the system is stable across the expected range of operation and any oscillations should be damped. Driven bounded reactivity or source strength oscillations will also result in a bounded response. The system is expected to be stable to bounded perturbations. However, feedback effects from the recombiner and condenser were not included in the stability analysis and will need to be evaluated during the evaluation of the final design of the SHINE facility. The staff finds that this response satisfies the requirements discussed in the ISG Augmenting NUREG-1537, Part 2, Section 13a2 and demonstrates an adequate design basis to protect the irradiation units from a large undamped power oscillation for a preliminary design.

On the basis of its review, the staff has determined that the level of detail provided on large undamped power oscillations demonstrates an adequate design basis for a preliminary design and satisfies the applicable acceptance criteria of the ISG Augmenting NUREG-1537, Part 2, Section 13a2, allowing the staff to make the following relevant finding:

> The applicant has evaluated potential unstable (growing), large undamped power oscillations and demonstrated that these oscillations are either not possible, or, if they develop, can be readily detected and suppressed so that the IU reaches a stable state. There are no dose consequences for either on site workers or the public for these events.

> The consequences of large undamped power oscillations have been analyzed and shown to be bounded by the MHA. Radiation doses to the public and staff will be within acceptable limits, and the safety and health of the staff and public will be adequately protected.

Therefore, the staff finds that the preliminary analysis of large undamped power oscillations, as described in SHINE PSAR Sections 13a2.1.8 and 13a2.2.8, is sufficient and meets the applicable regulatory requirements and guidance for the issuance of a construction permit in accordance with 10 CFR 50.35 and 50.40. Further technical or design information required to complete the safety analysis (e.g., feedback effects from the recombiner and condenser) may reasonably be left for later consideration. The staff will confirm that the final design conforms to the design basis during the evaluation of SHINE's FSAR.

13a.4.9 Detonation and Deflagration

In SHINE PSAR Sections 13a2.1.9 and 13a2.2.9, "Detonation and Deflagration in Primary System Boundary," the applicant analyzed the effects of a possible hydrogen detonation or deflagration within the primary system boundary on the IF. Irradiating the target solution produces significant quantities of hydrogen and oxygen through radiolysis and small amounts of fission product gases. The TOGS is designed to control the level of hydrogen and oxygen so that a deflagration or detonation does not occur. The hydrogen and oxygen is recombined, condensed, and returned as water to the TSV by the TOGS. The applicant has identified failure or degradation of the TOGS as an initiating event that could lead to a deflagration or detonation.

The primary system boundary is designed to be capable of withstanding all credible deflagrations and detonations. However, if the primary system did fail, there could be a radioactive release into the IU and the evolution of the event would be similar to the Mishandling or Malfunction of Target Solution scenario.

On the basis of its review, the staff has determined that the level of detail provided on detonation and deflagration events demonstrates an adequate design basis for a preliminary design and satisfies the applicable acceptance criteria of the ISG Augmenting NUREG-1537, Part 2, Section 13a2, allowing the staff to make the following relevant finding:

> The applicant has evaluated the consequences of potential deflagration or detonation of combustible gases within the primary boundary. The assumptions regarding the impact of potential explosions on primary boundary integrity are valid. There are no dose consequences for either on site workers or the public for these events. The consequences of detonation or deflagration events have been analyzed and shown to be bounded by the MHA. Radiation doses to the public and staff will be within acceptable limits, and the safety and health of the staff and public will be adequately protected.

Therefore, the staff finds that the preliminary analysis of detonation and deflagration events, as described in SHINE PSAR Sections 13a2.1.9 and 13a2.2.9, is sufficient and meets the applicable regulatory requirements and guidance for the issuance of a construction permit in accordance with 10 CFR 50.35 and 50.40. Further technical or design information required to complete the safety analysis may reasonably be left for later consideration. The staff will confirm that the final design conforms to the design basis during the evaluation of SHINE's FSAR.

13a.4.10 Unintended Exothermic Chemical Reactions Other Than Explosion

As described in SHINE PSAR Sections 13a2.1.10 and 13a2.2.10, “Unintended Exothermic Chemical Reactions Other than Detonation,” there is no potential for the target solution to undergo any significant exothermic chemical reactions. While the zirconium TSV could react with oxygen or steam at high temperature, operating conditions should preclude conditions where there would be a significant reaction rate.

On the basis of its review, the staff has determined that the level of detail provided on unintended exothermic chemical reactions other than explosions demonstrates an adequate design basis for a preliminary design and satisfies the applicable acceptance criteria of the ISG Augmenting NUREG-1537, Part 2, Section 13a2, allowing the staff to make the following relevant finding:

> Since there is no potential for the target solution to undergo any significant exothermic chemical reactions, there are no dose consequences for either on site workers or the public for these events. The consequences of these events have been analyzed and shown to be bounded by the MHA. Radiation doses to the public and staff will be within acceptable limits, and the safety and health of the staff and public will be adequately protected.

Therefore, the staff finds that the preliminary analysis of unintended exothermic chemical reactions other than explosions, as described in SHINE PSAR Sections 13a2.1.10 and 13a2.2.10, is sufficient and meets the applicable regulatory requirements and guidance for the issuance of a construction permit in accordance with 10 CFR 50.35 and 50.40. Further technical or design information required to complete the safety analysis may reasonably be left for later consideration. The staff will confirm that the final design conforms to the design basis during the evaluation of SHINE’s FSAR.

13a.4.11 Primary System Boundary System Interaction Events

As described in SHINE PSAR Sections 13a2.1.11 and 13a2.2.11, “Primary System Boundary System Interaction Events,” the applicant considered events that could result from system interactions within the IF and interactions between the IF and RPF. The PSB is located within the IF and consists of the TSV, the TSV dump tank, and the TOGS. An event affecting the IF would have to cause a breach of the PSB to have dose consequences to workers or the public.

The applicant considered three categories of system interactions in the PSAR:

(1) functional interactions
(2) spatial interactions
(3) human-intervention interactions

Functional interactions are interactions between systems that have a common interface. An example in this category is the RPCS, which provides the cooling for the water for many safety system heat exchangers including the PLCS, LWPS, and TOGS heat removal systems. A failure in the RPCS could affect all of the systems that rely on it. Spatial interactions are interactions that can occur between systems that do not have a common interface but they are located within close proximity of each other. An example of this is that the failure of one system can damage another system that is nearby. Human-intervention interactions are human errors made in one system that can cause an adverse effect in another system. An example is that a failure in the fuel mixing system can cause an excess reactivity event in the TSV.

The applicant identified that the events considered in this category have been considered and bounded by events in other categories and will not be discussed further.

One event that has not been analyzed in detail is an opening of the pressure safety valve on the PSB. The pressure safety valve is connected to the TOGS piping to passively prevent an over pressurization within the PSB, which may cause structural damage. The setpoint of the pressure safety valve will not exceed the design pressure of the PSB components. While the details of the system, including the setpoint value are not available in the PSAR, they will be provided in the FSAR. Since the TOGS system contains radioactive fission products, an event which causes the safety valve to open would allow fission products to exit the PSB and discharged to the Noble Gas Removal System (NGRS). SHINE intends to design the NGRS so that it has enough volume to receive the gas from the TOGS in an overpressure event and stay within pressure design limits. Although this event may not be as limiting as the events analyzed in the accident analysis, it may be more credible and occur with a higher probability. Therefore, an overpressure event that opens the pressure relief valve and discharges radioactive gas should be identified and analyzed in the FSAR to demonstrate the capability of the system to mitigate an overpressure event.

On the basis of its review, the staff has determined that the level of detail provided on primary system boundary system interaction events demonstrates an adequate design basis for a preliminary design and satisfies the applicable acceptance criteria of the ISG Augmenting NUREG-1537, Part 2, Section 13a2, allowing the staff to make the following relevant finding:

> There are no dose consequences for either on site workers or the public for these events. The consequences of PSB interaction events have been analyzed and shown to be bounded by the MHA. Radiation doses to the public and staff will be within acceptable limits, and the safety and health of the staff and public will be adequately protected.

Therefore, the staff finds that the preliminary analysis of primary system boundary system interaction events, as described in SHINE PSAR Sections 13a2.1.11 and 13a2.2.11, is sufficient and meets the applicable regulatory requirements and guidance for the issuance of a construction permit in accordance with 10 CFR 50.35 and 50.40. Further technical or design information required to complete the safety analysis may reasonably be left for later consideration. The staff will confirm that the final design conforms to the design basis during the evaluation of SHINE's FSAR.

13a.4.12 Inadvertent Exposure to Neutrons from the Neutron Driver

As described in SHINE PSAR Sections 13a2.1.12.1 and 13a2.2.12.1, "Inadvertent Exposure to Neutrons from the Neutron Driver," each irradiation unit contains a neutron driver, a neutron multiplier, and the subcritical uranyl sulphate contained in the TSV. These are all sources of neutrons during operations. The unexpected presence of personnel in the IU cell during operation of the neutron driver could expose those personnel to significant doses of neutron radiation. The applicant considered possible ways that this could occur and concluded that the event could be caused by either failure to control access to the IU cell during operation or failure to control neutron driver operation during maintenance.

The IU is shielded during normal operations by 6-foot thick concrete walls. Access is available to the unit through the IU cell concrete shield plug or the personnel access door. Personnel are only expected to be in the IU during maintenance activities when the driver is not operating. The possible scenarios that may occur under the failure to control access initiating event include

inadvertently removing the concrete shield plug or inadvertently opening the personnel access door. The scenario for the failure to control neutron driver operation involves personnel in the opened IU cell during maintenance activities while the neutron driver is inadvertently activated.

On the basis of its review, the staff has determined that the level of detail provided on inadvertent exposure to neutrons from the neutron driver demonstrates an adequate design basis for a preliminary design and satisfies the applicable acceptance criteria of the ISG Augmenting NUREG-1537, Part 2, Section 13a2, allowing the staff to make the following relevant findings:

(1) The applicant has prevented the possible exposure of workers to neutron radiation from the neutron driver through safety controls including an interlock system for the neutron driver personnel access door and administrative controls on access to the IU and operation of the neutron driver.

(2) There are no dose consequences for either on site workers or the public for these events. The consequences of these events have been analyzed and shown to be bounded by the MHA. Radiation doses to the public and staff will be within acceptable limits, and the safety and health of the staff and public will be adequately protected.

Therefore, the staff finds that the preliminary analysis of inadvertent exposure to neutrons from the neutron driver, as described in SHINE PSAR Sections 13a2.1.12.1 and 13a2.2.12.1,is sufficient and meets the applicable regulatory requirements and guidance for the issuance of a construction permit in accordance with 10 CFR 50.35 and 50.40. Further technical or design information required to complete the safety analysis may reasonably be left for later consideration. The staff will confirm that the final design conforms to the design basis during the evaluation of SHINE's FSAR.

13a.4.13 Irradiation Facility Fires

As described in SHINE PSAR Sections 13a2.1.12.2 and 13a2.2.12.2, "Irradiation Facility Fires," the IF contains the IUs, the TOGS cells, the cooling system, and other related electrical and mechanical systems. In addition to combustibles related to the equipment, there is also the potential for hydrogen to be in the area.

The applicant identified potential fire events in the IF that could occur during operations and maintenance activities and lead to radioactive releases. Fires that started inside the IF and external fires that propagate into the IF were considered. Both in-situ and transient sources of combustible material were considered as fuel sources for the fire.

On the basis of its review, the staff has determined that the level of detail provided on Irradiation Facility Fires demonstrates an adequate design basis for a preliminary design and satisfies the applicable acceptance criteria of the ISG Augmenting NUREG-1537, Part 2, Section 13a2, allowing the staff to make the following relevant finding:

Fires are expected to be contained within the IF with no releases to the public. There are no dose consequences for either on site workers or the public for these events. The consequences of these events have been analyzed and shown to be bounded by the MHA. Radiation doses to the public and staff will be within acceptable limits, and the safety and health of the staff and public will be adequately protected.

Therefore, the staff finds that the preliminary analysis of irradiation facility fires, as described in SHINE PSAR Sections 13a2.1.12.2 and 13a2.2.12.2, is sufficient and meets the applicable regulatory requirements and guidance for the issuance of a construction permit in accordance with 10 CFR 50.35 and 50.40. Further technical or design information required to complete the safety analysis may reasonably be left for later consideration. The staff will confirm that the final design conforms to the design basis during the evaluation of SHINE's FSAR.

13a.4.14 Tritium Purification System (TPS) Design Basis Accident

As described in SHINE PSAR Sections 13a2.1.12.3 and 13a2.2.12.3, "Tritium Purification System (TPS) Design Basis Accident," the TPS contains and processes the tritium that is used in the neutron drivers. Tritium is delivered to the SHINE facility in Department of Transportation (DOT) approved containers. Those containers are loaded into the TPS glove boxes, which are located in the IF. The system purifies and delivers the gas containing the tritium to the accelerator target chamber. The TPS has two independent isotope separation subsystems that share a common supply and return piping system that supplies tritium to the neutron driver. The release of tritium from the TPS can result in radiation doses to workers and the public.

The applicant identified piping failure, equipment malfunctions, and human errors as possible initiating events that cause a release of tritium. Important conditions and assumptions that are important to the safety of the system are:

- The TPS process equipment is operated through a programmable logic controller/process automation controller (PLC/PAC). The process will be performed in semi-batch process steps of treating the contaminated flush gas and purifying the contaminated tritium gas. The process steps and local operator interfaces will be controlled and monitored by the PLC system.

- Two independent TPS glove boxes form a confinement boundary around the two isotope separation systems. Double-walled pipe forms a confinement boundary around the TPS supply and return tritium piping to and from the neutron drivers.

- The glove box atmosphere is inerted with nitrogen and oxygen levels are monitored.

- The piping to and from the neutron driver accelerator system (NDAS) is double-walled and designed to maintain its integrity during normal and accident conditions.

- Leakage of tritium from the system will be into either the double-wall piping or glovebox confinement.

- Leakage of tritium from the glove box enclosure or the external piping is detected by the RAMS or other leakage detection systems to ensure facility personnel are protected.

- The TPS glove boxes and piping are seismically designed and protected from external events by building design.

- Automatic isolation valves are installed in the system to isolate sections of the system to minimize system release.

- Tritium is delivered in robust DOT approved containers and transported in engineered transport containers, and is only handled inside the TPS glove boxes or a transfer confinement.

- TPS piping to and from the NDAS units is normally operated at sub-atmospheric pressures.

The applicant considered several possible scenarios including a loss of TPS system integrity inside the glove box or double-wall piping, loss of confinement integrity, mishandling or dropping of a TPS ambient molecular sieve bed (AMSB) during maintenance, release of tritium during a transfer operation, and fire.

A loss of TPS system integrity because of a pipe break in a neutron driver was determined to be the limiting event since the only significant tritium inventory that is not in double walled piping or an engineered confinement is in the neutron drivers. The TPS has isolation features to mitigate large releases of tritium and no active single failure can cause a large release. A pipe break on a neutron driver would be expected to release less than 15 percent of the driver tritium inventory for all IUs because of automatic isolation valves, but a loss of the entire inventory is assumed for this accident. Isolation dampers on the RCA ventilation system will automatically close on high radiation signals. The sequence of events for the postulated scenario is as follows:

- A release of the tritium in the neutron driver system directly to the irradiation unit cell.

- A high radiation signal (e.g., loss of vacuum in TPS piping) or other actuation signal activates the bubble-tight isolation dampers after approximately one percent of the material is released to the RVZ1, and actuates isolation of tritium supply and return piping.

- The airborne activity is filtered prior to being released to the environment through the RVZ1 system until the bubble-tight dampers are closed.

- Alarms are available locally or in the control room to notify facility personnel of radiation leakage due to loss of TPS integrity.

- Facility personnel evacuate the immediate area upon actuation of the radiation area monitor alarms.

No credit is given for the confinement of the IU cell for the worker dose calculation and all of the activity is assumed to be released to RVZ1. The airborne activity in RVZ1 is released to the environment without credit for any decontamination.

The applicant determined that the dose consequences of the loss of TPS integrity are calculated to be within the regulatory limits of 10 CFR Part 20. A TEDE of 2.4 rem is calculated for the workers at the facility. This on-site dose is less than the 5 rem regulatory limit specified in 10 CFR 20.1201. A TEDE of 5.6e-4 rem is calculated for a member of the public at the site boundary, and a TEDE of 8.0e-5 rem is calculated at the nearest residence. The off-site doses are less than the 0.1 rem regulatory limit specified in 10 CFR 20.1301.

On the basis of its review, the staff has determined that the level of detail provided on TPS design basis accident demonstrates an adequate design basis for a preliminary design and

satisfies the applicable acceptance criteria of the ISG Augmenting NUREG-1537, Part 2, Section 13a2, allowing the staff to make the following relevant findings:

(1) The tritium release in this scenario will enter into the gas space of the IU. The tritium release rate should be controlled by the mixing of the tritium in the gas space.

(2) The exposure time of workers is assumed to be 10 minutes, which should be conservative for workers trained to evacuate in the event of a radiological release.

(3) The applicant adequately considered the consequences of a tritium purification system accident. Because the assumptions of the scenario are bounding, the doses calculated for this event will be conservative. More realistic assumptions for the release fractions would decrease the source term significantly compared to the source term assumed for this scenario. The consequences of the IF tritium purification system accident have been analyzed and shown to be bounded by the MHA. Radiation doses to the public and staff will be within acceptable limits, and the safety and health of the staff and public will be adequately protected.

Therefore, the staff finds that the preliminary analysis of the IF tritium purification system accident, as described in SHINE PSAR Sections 13a2.1.12.3 and 13a2.2.12.3, is sufficient and meets the applicable regulatory requirements and guidance for the issuance of a construction permit in accordance with 10 CFR 50.35 and 50.40. Further technical or design information required to complete the safety analysis may reasonably be left for later consideration. The staff will confirm that the final design conforms to the design basis during the evaluation of SHINE's FSAR.

13a.4.15 Probable Subjects of Technical Specifications

In accordance with 10 CFR 50.34(a)(5), the staff evaluated the sufficiency of the applicant's identification and justification for the selection of those variables, conditions, or other items which are determined to be probable subjects of technical specifications supporting the SHINE accident analysis, with special attention given to those items which may significantly influence the final design.

SHINE PSAR Section 13a2.2.2.7, "Safety Controls," identifies uranium enrichment and concentration as probable subjects of technical specifications to address excess reactivity insertion accidents. Section 13a2.2.2.7 also includes procedural controls of start-up as an administrative control.

SHINE PSAR Section 13a2.2.8, "Large Undamped Power Oscillation," lists negative temperature and void coefficients, as well as TSV thermal power limits as probable subjects of technical specifications required to address large undamped power oscillations.

SHINE PSAR Section 13a2.2.10, "Unintended Exothermic Chemical Reactions Other Than Detonation," identifies uranium enrichment and concentration as probable subjects of technical specifications to prevent the effects of PSB interaction events.

SHINE PSAR Section 13a2.2.12.1, "Inadvertent Exposure to Neutrons from the Neutron Driver," identifies the use of accelerator audible/visual warnings as a probable administrative technical specification to prevent an inadvertent exposure to neutrons from the accelerator.

SHINE PSAR Section 13a2.2.12.2, “Irradiation Facility Fire Event,” identifies limited tritium inventory based on TPS fixed glovebox volume and deuterium source vessel integrity program as probable administrative technical specifications to prevent irradiation facility fire events.

SHINE PSAR Section 13a2.2.12.3, “Tritium Purification System Design Basis Accident,” lists engineered transport enclosures or containers and TPS system sampling, inspection, testing and operating procedures as probable administrative technical specifications to prevent a TPS design basis accident.

Based on the information provided in Section 13a2.2 of the SHINE PSAR, the staff finds that identification and justification of the proposed technical specifications is sufficient and meets the applicable regulatory requirements for the issuance of a construction permit in accordance with 10 CFR 50.35. A detailed evaluation of technical specifications, including LCOs and surveillance requirements, will be performed during the review of SHINE’s operating license application.

13a.5 Summary and Conclusions

The staff evaluated descriptions and discussions of SHINE’s IF accident analysis, including probable subjects of technical specifications, as described in SHINE PSAR Section 13a2 and supplemented by the applicant’s responses to RAIs, and finds that the preliminary accident analysis, including the principal design criteria; design bases; information relative to materials of construction, general arrangement, and approximate dimensions; and preliminary analysis and evaluation of the design and performance of structures, systems, and components of the facility: (1) provides reasonable assurance that the final design will conform to the design basis, (2) includes an adequate margin of safety, (3) structures, systems, and components adequately provide for the prevention of accidents and the mitigation of consequences of accidents, and (4) meets all applicable regulatory requirements and acceptance criteria in or referenced in ISG Augmenting NUREG-1537.

The staff further notes that the applicant has proposed and analyzed a set of accidents that should be representative of the possible range of events that may happen in an operating facility. The proposed set was the result of a detailed analysis of the facility design and identification of potential initiating events that can test possible vulnerabilities in the facility design. The analyzed set of accidents provides insights into the challenges to the safety systems and defense in depth features of the facility and consider how the potential accidents might be prevented or mitigated by administrative controls, engineered safety systems, and trained personnel actions.

SHINE used International Commission on Radiation Protection (ICRP) Publication 30, “Limits for Intakes of Radionuclides by Workers,” (ICRP 30) to calculate dose to members of the public in the preliminary accident analysis because ICRP 30 forms part of the basis for 10 CFR Part 20, and there is no regulatory requirement to use any guidance other than ICRP 30. However, SHINE acknowledges that ICRP Publication 72, “Age-dependent Doses to Members of the Public from Intake of Radionuclides: Part 5 Compilation of Ingestion and Inhalation Dose Coefficients,” (ICRP 72) provides dose coefficients based on newer bio-kinetic models and data than ICRP 30. Therefore, as described in response to RAI 13a2.2-5 (Reference 27), SHINE will update the accident analysis calculations to use dose conversion factors (DCFs) from ICRP 72 and will calculate dose effects to ensure that the dose limits in 10 CFR 20.1301 are met. The staff is tracking this as a regulatory commitment in Appendix A of this SER.

The proposed features of the design, including the engineered safety features keep the radiation doses below acceptable limits and adequately protect the workers and the public for all proposed accidents. The safety systems are single failure proof and follow the defense in depth philosophy. The applicant has also proposed an MHA that uses conservative assumptions. The calculated dose release consequences of the MHA bound all other accidents. The proposed preliminary features of the design including administrative controls, engineered safety features, and trained personnel actions keep the radiation doses below acceptable limits and adequately protect the workers and the public for the MHA. Therefore, the proposed preliminary accident analysis of the IU and the calculated consequences show that the design, including the engineered safety features adequately protect workers and the public.

On the basis of these findings, the staff has made the following conclusions for the issuance of a construction permit in accordance with 10 CFR 50.35 and 50.40:

(1) SHINE has described the proposed design of the systems supporting the accident analysis, including, but not limited to, the principal architectural and engineering criteria for the design, and has identified the major features or components incorporated therein for the protection of the health and safety of the public.

(2) Further technical or design information required to complete the safety analysis of the cooling systems may reasonably be left for later consideration in the FSAR.

(3) There is reasonable assurance that, taking into consideration the site criteria contained in 10 CFR Part 100, the proposed facility can be constructed and operated at the proposed location without undue risk to the health and safety of the public.

(4) There is reasonable assurance: (i) that the construction of the SHINE facility will not endanger the health and safety of the public, and (ii) that construction activities can be conducted in compliance with the Commission's regulations.

(5) The issuance of a permit for the construction of the facility would not be inimical to the common defense and security or to the health and safety of the public.

13b Radioisotope Production Facility Accident Analysis

Section 13b, "Radioisotope Production Facility Accident Analysis," provides an evaluation of the preliminary accident analysis of SHINE's RPF as presented in PSAR Section 13b, "Radioisotope Production Facility Accident Analysis," within which, SHINE describes accident-initiating events and scenarios, as well as the accident analysis and determination of consequences.

13b.1 Areas of Review

The staff reviewed SHINE PSAR Section 13b against applicable regulatory requirements using appropriate regulatory guidance and standards to assess the sufficiency of the preliminary accident analysis. As part of this review, the staff evaluated descriptions and discussions of SHINE's accident analysis, with attention to design and operating characteristics, unusual or unique design features, and principal safety considerations. The preliminary accident analysis was evaluated to ensure the sufficiency of principal design criteria; design bases; and general information relative to materials of construction, arrangement of structures and components, and approximate dimensions, as needed, sufficient to provide reasonable assurance that the

final design will conform to the design basis. In addition, the staff reviewed SHINE's identification and justification for the selection of those variables, conditions, or other items that are important to safety and that are determined to be probable subjects of technical specifications for the facility. Structures, systems, and components were also evaluated to ensure that they would adequately provide for the prevention of accidents and the mitigation of consequences of accidents. The staff considered the preliminary analysis and evaluation of the design and performance of SSCs of the SHINE facility, including those SSCs shared by both the IF and RPF, with the objective of assessing the risk to public health and safety resulting from operation of the facility.

Areas of review for this section included accident analysis methodology, accidents with radiological consequences, and accidents with hazardous chemicals. Within these areas of review, the staff assessed processes conducted outside the IF; accident initiating events; the maximum hypothetical accident; loss of containment; external events; critical equipment malfunction; inadvertent nuclear criticalities; RPF fire; and chemical accident descriptions, mitigated and unmitigated consequences, and safety controls.

13b.2 Summary of Application

The accident analysis for the Radioisotope Production Facility (RPF) establishes safety limits and designates safety controls for facility operations in the RPF. A technical basis for control of those limits is provided in the PSAR and in supporting information for the integrated safety analysis. Some portion of this technical basis is expected to be included in technical specifications. The accidents analyzed in this chapter also support the establishment of the design basis limits for the SSCs in the RPF processes. The RPF design has design features and analysis assumptions that are important for understanding the bases of the accident analysis as it applies to the design of the facility. The applicant has identified, through a systematic process, a variety of event types that are expected to be prevented or mitigated to acceptable limits for the credible accidents related to the RPF. All accident scenarios and analyses for the construction permit are based on the preliminary design of the facility and are considered preliminary from an operating licensing and final design standpoint.

SHINE PSAR Section 13b describes accident analysis methodology, accidents with radiological consequences, and accidents with hazardous chemicals for the SHINE RPF. The application provides details on processes conducted outside the IF; accident initiating events; the maximum hypothetical accident; loss of containment; external events; critical equipment malfunction; inadvertent nuclear criticalities; RPF fire; and chemical accident descriptions, consequences, controls, and surveillance requirements. SHINE PSAR Section 13b.1.2 and Table 13b.1-1-4, "Potential Accident Sequences," which was provided in response to RAI 13b.1-1 (Reference 21), discuss initiating events that could accidentally release fission products from irradiated fuel while in process, in storage, or while being transferred within the facility.

Section 13b.2.5 of the PSAR discusses the potential for a criticality incident with un-irradiated SNM. An accidental criticality is shown to be highly unlikely, as the facility has been designed with passive engineering design features and other safety related controls to prevent criticality and assure that processes remain subcritical. Additionally, administrative controls and safety-related (SR) SSCs provide control on enrichments and target solution uranium concentration to further prevent inadvertent criticality. Section 13b.2.5 identifies areas within the RPF where an inadvertent criticality is possible and discusses controls that are used to reduce the likelihood of an inadvertent criticality. Additional criticality safety analysis discussion and review is in Section 6b of this SER.

The RPF design basis is supported by information provided in SHINE PSAR Section 13b through discussions related to the use of Integrated Safety Analysis (ISA) methodology, determination of anticipated events, demonstration of acceptable risk, and the determination and designation of the safety controls needed for the risk demonstration. The analysis performed by the applicant considers the radiological consequences, chemical consequences, fire analysis, and criticality status of credible accidents in the radioisotope production facility. The applicant provided the following basis for the identification and evaluation of accident scenarios in the RPF:

- Hazard and operability studies (HAZOPS) and preliminary design hazard analyses (PHA) performed using guidance consistent with NUREG-1520 (Reference 60).
- The list of accidents identified in the Final Interim Staff Guidance (ISG) Augmenting NUREG-1537.
- Experience of the hazard analysis team.
- Current preliminary design and design basis evaluations in the preliminary safety analysis report (PSAR) for the processes in the radioisotope production facility.
- The determination of safety controls needed to prevent or mitigate accidents.

13b.3 Regulatory Basis and Acceptance Criteria

The staff reviewed SHINE PSAR Section 13b against applicable regulatory requirements, regulatory guidance, and standards, to assess the sufficiency of the preliminary accident analysis for the issuance of a construction permit. In accordance with paragraph (a) of 10 CF 50.35, “Issuance of Construction Permits,” a construction permit authorizing SHINE to proceed with construction may be issued once the following findings have been made:

(1) SHINE has described the proposed design of the facility, including, but not limited to, the principal architectural and engineering criteria for the design, and has identified the major features or components incorporated therein for the protection of the health and safety of the public.

(2) Such further technical or design information, as may be required to complete the safety analysis, and which can reasonably be left for later consideration, will be supplied in the FSAR.

(3) Safety features or components, if any, which require research and development have been described by SHINE and a research and development program will be conducted that is reasonably designed to resolve any safety questions associated with such features or components.

(4) On the basis of the foregoing, there is reasonable assurance that: (i) such safety questions will be satisfactorily resolved at or before the latest date stated in the application for completion of construction of the proposed facility, and (ii) taking into consideration the site criteria contained in 10 CFR Part 100, the proposed facility can be constructed and operated at the proposed location without undue risk to the health and safety of the public.

With respect to the last of these findings, the staff notes that the requirements of 10 CFR Part 100 are specific to nuclear power reactors, and therefore not applicable to the SHINE facility. However, the staff evaluated SHINE's site specific conditions using site criteria similar to 10 CFR Part 100, by using the guidance in NUREG-1537. The staff's review evaluated the geography and demography of the site; nearby industrial, transportation, and military facilities; site meteorology; site hydrology; and site geology, seismology, and geotechnical engineering to ensure that issuance of the construction permit will not be inimical to public health and safety.

The staff's evaluation of the preliminary accident analysis does not constitute approval of the safety of any design feature or specification. Such approval will be made following the evaluation of the final design of the SHINE facility as described in the FSAR as part of SHINE's operating license application.

13b.3.1 Applicable Regulatory Requirements

The applicable regulatory requirements for the evaluation of SHINE's preliminary accident analysis are as follows:

- 10 CFR 50.34, "Contents of applications; technical information," paragraph (a), "Preliminary safety analysis report."
- 50.40, "Common Standards."
- 10 CFR 20.1201, "Occupational dose limits for adults."
- 10 CFR 20.1301, "Dose limits for individual members of the public."

13b.3.2 Regulatory Guidance and Acceptance Criteria

In applying guidance and acceptance criteria, the staff used its judgment as to which acceptance criteria were relevant to SHINE's proposed facility, as much of this guidance was originally developed for nuclear reactors. Given the similarities in SHINE's proposed facility and non-power research reactors, the staff used established guidance documents and the Commission's regulations to determine the acceptance criteria for demonstrating compliance with 10 CFR regulatory requirements. For example, the staff used:

- NUREG-1537, Part 1.
- NUREG-1537, Part 2.
- Final ISG Augmenting NUREG-1537, Part 1.
- Final ISG Augmenting NUREG-1537, Part 2.

As stated in the ISG Augmenting NUREG-1537, the staff determined that certain guidance originally developed for heterogeneous non-power research and test reactors is applicable to aqueous homogenous facilities and production facilities. SHINE used this guidance to inform the design of its facility and prepare its PSAR. The staff's use of reactor-based guidance in its evaluation of the SHINE PSAR is consistent with the ISG Augmenting NUREG-1537.

As appropriate, additional guidance (e.g., NRC regulatory guides, IEEE standards, ANSI/ANS standards) has been used in the staff's review of SHINE's PSAR. The use of additional

guidance is based on the technical judgment of the reviewer, as well as references in NUREG-1537, Parts 1 and 2; the ISG Augmenting NUREG-1537, Parts 1 and 2; and the SHINE PSAR. Additional guidance documents used to evaluate SHINE's PSAR are provided as references in Appendix B of this SER.

The staff has determined that the use of Integrated Safety Analysis (ISA) methodologies as described in 10 CFR Part 70 and NUREG-1520, "Standard Review Plan for the Review of a License Application for a Fuel Cycle Facility" (Reference 60), application of the radiological and chemical consequence and likelihood criteria contained in the performance requirements of 10 CFR 70.61, and establishment of management measures are an acceptable way of demonstrating adequate safety for the radioisotope production facility. Applicants are free to propose alternate accident analysis methodologies, to propose alternate radiological and chemical consequence and likelihood criteria, to propose alternate safety features, and to propose alternate methods of assuring the availability and reliability of the safety features.

As used in Section 13b and elsewhere in this SER, the term "performance requirements" is not intended to suggest that 10 CFR Part 50 licensees are required to comply with the performance requirements found in 10 CFR 70.61, only that their use as accident consequence and likelihood criteria for the SHINE RPF would be found acceptable by NRC staff. Alternate accident consequence and likelihood criteria may be found acceptable if the applicant demonstrates that the proposed equipment and facilities to prevent or mitigate accidents are adequate to protect health and minimize danger to life or property, and that proposed procedures to prevent or mitigate accidents are adequate to protect health and to minimize danger to life or property.

13b.4 Review Procedures, Technical Evaluation, and Evaluation Findings

The staff evaluated the technical information presented in SHINE PSAR Section 13b, as supplemented by the applicant's responses to RAIs, to assess the sufficiency of the preliminary design and performance of SHINE's accident analysis in the RPF for the issuance of a construction permit, in accordance with 10 CFR 50.35(a). The sufficiency of the SHINE preliminary accident analysis is determined by ensuring the design and performance meet applicable regulatory requirements, guidance, and acceptance criteria, as discussed in Section 13b.3, "Regulatory Basis and Acceptance Criteria," of this SER. While the technical evaluation of preliminary accident analysis provided in this section is specific to the SHINE RPF, the staff's review considers the interface of accident scenarios between the IF and RPF as part of a comprehensive technical evaluation. The results of this technical evaluation are summarized in SER Section 13b.5, "Summary and Conclusions."

For the purposes of issuing a construction permit, the preliminary accident analysis may be adequately described at a conceptual level. The staff evaluated the sufficiency of the preliminary accident analysis based on the applicant's design methodology and ability to provide reasonable assurance that the final design will conform to the design bases with adequate margin for safety. As such, the staff's evaluation of the preliminary accident analysis does not constitute approval of the safety of any design feature or specification. Such approval will be made following the evaluation of the final design of the SHINE facility, as described in the FSAR, as part of SHINE's operating license application.

For SER Sections 13b.4.1 through 13b.4.10, the staff evaluated the sufficiency of the preliminary identification, analysis, and determination of consequences of accident-initiating events and scenarios, as described in SHINE PSAR Sections 13b.1, "Radioisotope Production

Facility Accident Analysis," and 13b.2, "Analyses of Accidents with Radiological Consequences," in part, by reviewing the processes conducted outside of the irradiation facility, accident initiating events, maximum hypothetical accident, loss of containment, external events, loss of normal electric power, mishandling or malfunction of equipment, inadvertent nuclear criticality in the RPF, and RPF fire, using the guidance and acceptance criteria from Section 13b.1, "Radioisotope Production Facility Accident Analysis Methodology," of the ISG Augmenting NUREG-1537, Parts 1 and 2.

For SER Sections 13b.4.1 through 13b.4.10, consistent with the review procedures of the ISG Augmenting NUREG-1537, Part 2, Section 13b.1, the staff reviewed SHINE's accident methodology and analysis and followed the sequence of events in each accident scenario from initiation to stabilization. The staff evaluated the maximum hypothetical accident; credible accidents; instruments, controls and automatic protective systems assumed to be operating normally before an initiating event; the identification of single malfunctions; the discussion of sequence of events and components and systems damaged during the accident scenario; mathematical models and analytical methods employed; radiation source term; and that potential radiation consequences to the facility staff and public were presented and compared with acceptable limits.

13b.4.1 Processes Conducted Outside of the Irradiation Facility

The processes that occur within the radioisotope production facility were evaluated by the applicant through the performance of an Integrated Safety Analysis (ISA) and expected generation of an ISA Summary. As part of the ISA analysis, the applicant evaluated the hazards associated with the processes in the radioisotope production facility. Section 13b.1.1 of the PSAR (Reference 13) contains information that provides assurance that all potential accidents at the RPF that could reach unmitigated and uncontrolled consequences of concern have been considered and their consequences adequately evaluated. SHINE considered postulated accidents in the categories identified below.

A summary of the evaluations for the radioisotope production facility falls into the following categories:

- Operations with Special Nuclear Material (SNM)
  - Irradiated target solution processing for radioisotope extraction
  - Irradiated target solution processing for reuse or for waste disposal
  - Processing with unirradiated SNM
- Radiochemical operations
- Operations with hazardous chemicals

In the course of reviewing SHINE's accident methodology, the staff determined that additional information was necessary to evaluate the adequacy of SHINE's methodology for determining the sequence of events in an accident scenario, including the qualifications of the ISA team. Therefore, RAI 13b.1-3 (Reference 16) was issued, in part, to satisfy the requirements discussed in the ISG Augmenting NUREG-1537, Part 2, Section 13b.1.2, "Accident Initiating Events," which states that information in the PSAR should allow the reviewer to follow the sequence of events in the accident scenario from initiation to a stabilized condition. In response to this RAI (Reference 25), the applicant provided information that describes the ISA team that performed the preliminary ISA analysis of the radioisotope production facility. The staff

reviewed the makeup of the ISA team provided and the applicable experience and expertise of the ISA team members. Team members were qualified in the areas of chemical safety, criticality safety, fire safety, and radiological safety, and multiple members were qualified, trained ISA team leaders, as required. The composition of the ISA team makeup and qualifications was consistent with the guidance of NUREG-1520 (Reference 60) and followed the requirements of 10 CFR 70.62(c)(2). The staff review finds that the team performing the preliminary ISA analysis, as described in response to RAI 13b.1-3 (Reference 25), to be acceptable as it contained members with technical expertise, ISA methodology knowledgeability, and operationally experienced personnel.

The applicant used two types of hazard assessment methods to evaluate the hazards of the RPF processes in the facility. These methods are a HAZOPS, and a PHA. A HAZOPS focuses on the evaluation of potential process upsets or deviations, which leads to identification of potential accidents and scenarios of concern which serve as input to the PHA and the identification of process safety controls. The PHA focuses on evaluating facility and external events that are common to the radioisotope production facility.

For the ISA methodology, the applicant provided likelihood and initiating event data for its preliminary ISA evaluations of the radioisotope production facility design. SHINE's radiological consequence analysis utilized requirements similar to the requirements of 10 CFR 70.61. For the radiological events, the applicant uses 10 CFR Part 20 dose criteria rather than the 10 CFR 70.61 performance criteria. Given that the 10 CFR Part 20 criteria are more conservative than the 10 CFR 70.61 requirements, the staff finds that alternate approach acceptable. Consistent with the ISG guidance for chemical performance criteria, the applicant followed 10 CFR 70.61 limits. SHINE performed a PHA and HAZOPS on processes conducted outside the irradiation facility, and will provide the results of these evaluations in an ISA Summary for the RPF to be submitted as part of their application for an operating license.

However, in the course of reviewing SHINE's ISA process, the NRC staff determined that additional information was needed to assess the adequacy of SHINE's ISA process to its accident analysis. Therefore, in RAIs 13b.1-1 and 13b.1-2 (Reference 14), the staff requested that SHINE provide additional information on its accident sequences to understand how an ISA was performed for each process or process segment in the RPF. (See ISG Augmenting NUREG-1537, Part 2, Section 13b.1, "Radioisotope Production Facility Accident Analysis Methodology," which states that "an integrated safety analysis should be performed for each process or process segment" in the RPF). In response to these RAIs (Reference 21), and in a revision to PSAR Chapter 13, (Reference 61), SHINE provided a preliminary ISA Summary based on the current design of the facility that identified accident sequences with high or intermediate consequences, and designated safety-related structures systems and components (SR-SSCs) to prevent or mitigate the credible hazards to acceptable consequences. The majority of these SR-SSCs are passive and active engineered controls that will be constructed or installed during the construction permit phase of the SHINE project. SHINE PSAR Chapter 3, as supplemented by responses to RAIs, provided standards and reliability criteria for the passive and active engineered controls. While administrative controls requiring the performance of operator actions were briefly described in the responses to RAIs 13b.1-1 and 13b.1-2, the management measures needed to justify their availability and reliability for performing their safety functions, as needed, were not described in detail. The staff finds that the preliminary ISA Summary provided by SHINE satisfies the requirements of the ISG Augmenting NUREG-1537, Part 2, Section 13b.1, and demonstrates an adequate design basis for a preliminary design. The staff will confirm that additional analyses and details on the ISA

process and specific technical topics, such as on administrative controls and supporting management measures, conforms to this design basis during the evaluation of SHINE's FSAR.

On the basis of its review, the staff has determined that the level of detail provided on processes conducted outside of the irradiation facility demonstrates an adequate design basis for a preliminary design and satisfies the applicable acceptance criteria of the ISG Augmenting NUREG-1537, Part 2, Section 13b.1, allowing the staff to make the following relevant findings:

(1) The use of ISA methodologies as described in 10 CFR Part 70 and ISG Augmenting NUREG-1537, application of the radiological and chemical consequence and likelihood criteria contained in the performance requirements of 10 CFR 70.61 and 10 CFR Part 20, and establishment of management measures demonstrate adequate safety for the radioisotope production facility.

(2) The staff also finds that the definitions of highly unlikely, unlikely and credible are consistent with the guidance in NUREG-1520 and are acceptable for use in the ISA analysis.

(3) The preliminary ISA performed by the applicant provides the basis to establish that the design of the facility including the associated structures, systems, and components can adequately assure that acceptable risk to the workers, public and the environment can be established and maintained. The evaluations performed by the applicant have resulted in the conditions needed to designate passive and active engineered safety features needed for the safe operation of this section of the facility and for the processes performed in this section of the facility.

(4) Evaluations performed by the applicant will ensure that all nuclear processes will be subcritical during normal and credible abnormal operating conditions and that high consequence accidents are controlled to be highly unlikely, and that intermediate consequence accidents are controlled to be unlikely.

Therefore, the staff finds that the preliminary analysis of processes conducted outside of the irradiation facility, as described in SHINE PSAR Sections 13b.1.1, and supplemented by the applicant's responses to RAIs, is sufficient and meets the applicable regulatory requirements and guidance for the issuance of a construction permit in accordance with 10 CFR 50.35 and 50.40. Further technical or design information required to complete the safety analysis may reasonably be left for later consideration. The staff will confirm that the final design conforms to the design basis during the evaluation of SHINE's FSAR.

13b.4.2 Accident Initiating Events

The staff reviewed the two types of hazard assessment methods the applicant selected to evaluate the hazards of the facility by evaluating specific accidents scenarios of various technical types. These methods are a HAZOPS and a PHA. The HAZOPS focused on the evaluation of potential process upsets or deviations, which leads to identification of potential initiating events (IEs) and scenarios of concern and served as input to the PHA and the identification of process controls. The PHA focused on evaluating facility and external events that are common to the IF and RPF. These methods are typical methods used for the evaluation of hazards in fuel cycle facilities. The staff review included evaluation of the completeness of the hazards evaluated for the radioisotope production facility, as well as the

determination of the preliminary likelihoods and consequences for each accident sequence event.

For the RPF, SHINE also analyzed an accident scenario with consequences exceeding all credible accidents, called the Maximum Hypothetical Accident (MHA). In the RPF, the MHA was identified as a release of inventory stored in the Noble Gas Removal System (NGRS) tanks, resulting in a maximum release of radiological material to the workers and individual members of the public.

The RPF accident analyses included all processes involving greater than critical mass (as defined in 10 CFR 70.4) quantities of SNM. The performance criteria in 10 CFR 70.61, "Performance Requirements," categorize accidents according to severity of consequences. These performance criteria require that high-consequence accidents to be rendered highly unlikely to occur through the application of in-depth preventive and mitigative measures. Other accidents with less than high consequences, as defined in 10 CFR 70.61, require fewer or less-strict protective measures.

SHINE's RPF accident analyses identified structures, systems, components that SHINE has designated as SR-SSCs. SHINE intends to include the SR-SSCs in operating license technical specifications and apply the management measures needed to assure that the SSC's availability and reliability is well established and maintained.

The preliminary accident analyses for the operations with special nuclear material (SNM) in the radioisotope production facility included the following types of events:

- MHA
- External events
- Critical equipment malfunction
- RPF fire
- Chemical accidents.

In the course of reviewing SHINE's RPF accident analysis, the staff determined that additional information was necessary to evaluate the adequacy of SHINE's identification and analysis of accident sequences, from the initiating events through the sequence's mitigated consequences. Therefore, RAI 13b.1-3 (Reference 16) was issued, in part, to request that SHINE provide detailed accident sequence descriptions for at least four of the sequences, from the initiating events through the sequence's mitigating consequences. This information was necessary to understand how the PSAR allows the staff to follow the sequence of events in the accident scenario from initiation to a stabilized condition. (See NUREG-1537, Part 2, Section 13b.1.2, "Accident Initiating Events"). In response to this RAI (Reference 25), the applicant systematically analyzed and evaluated events in each category and identified the limiting event for each type for detailed quantitative analysis of the possible consequences. The limiting event in each category had consequences that exceed all others in that category. The applicant addressed the likelihood of occurrence for both the initiating events and the safety control failures in a qualitative manner consistent with the proposed methodology provided in the response to RAI 13b.1-3. Quantitative analysis of probability is not required and was not provided other than frequency of occurrence for certain external events. NRC staff reviewed SHINE's systematic analysis and discussion of credible accidents for determining the general types of accident sequences in each category, and finds that the response to RAI 13b.1-3 satisfies the requirements discussed in the ISG Augmenting NUREG-1537, Part 2,

Section 13b.1.1 and demonstrates an adequate design basis for a preliminary design. Demonstration of meeting the risk-informed performance criteria was supported by the use of tables from NUREG-1520 (Reference 60) that provided initiating event and failure likelihood scoring data, as well as a matrix for evaluating acceptability of the overall accident sequence risk. The staff will confirm that the final design conforms to this design basis during the evaluation of SHINE's FSAR.

On the basis of its review, the staff has determined that the level of detail provided on processes conducted outside of the irradiation facility demonstrates an adequate design basis for a preliminary design and satisfies the applicable acceptance criteria of the ISG Augmenting NUREG-1537, Part 2, Section 13b.1, allowing the staff to make the following relevant findings:

(1) SHINE has implemented an adequate preliminary safety program similar to the safety program in 10 CFR 70.62, including accident analysis and the future application of management measures as described in Chapter 12 of the PSAR, "Conduct of Operations" (Reference 13).

(2) There is reasonable assurance that SHINE has addressed all significant credible accidents involving internal facility processes, abnormal events, and process deviations and credible external events that could result in serious adverse consequences to workers, the facility, the public, and the environment.

(3) SHINE has identified designated engineered and administrative safety features necessary to provide preventive or mitigative measures that give reasonable assurance that the facility will operate in compliance with the performance requirements proposed by the applicant.

(4) For the RPF, the results of the accident analysis demonstrate, in a preliminary manner, adequate safety by meeting the performance requirements proposed by the applicant for demonstrating acceptable risk.

(5) Information in the PSAR and in responses to staff RAIs allowed NRC staff to review the sequence of events in the accident scenario from initiation to a stabilized condition.

(6) NRC staff has reasonable assurance that all credible accidents at the RPF were considered and evaluated during the preliminary design stage. The demonstrations of the risk associated with credible accidents were shown to be adequate to prevent the release of radioactive materials, in amounts exceeding regulatory limits, to uncontrolled areas as a result of credible accidents.

(7) The applicant has considered the consequences to the public and the workers for all credible chemical accidents at the radioisotope production facility that reach the intermediate or high consequence thresholds as defined by the applicant consistent with the guidance in the ISG.

Therefore, the staff finds that the preliminary analysis of accident initiating events, as described in SHINE PSAR Sections 13b.1.2, and supplemented by the applicant's responses to RAIs, is sufficient and meets the applicable regulatory requirements and guidance for the issuance of a construction permit in accordance with 10 CFR 50.35 and 50.40. The staff will confirm that the final design conforms to the design basis during the evaluation of SHINE's FSAR.

13b.4.3 Maximum Hypothetical Accident

As described in SHINE PSAR Sections 13a2.1.1, “Maximum Hypothetical Accident,” and 13a2.2.1, “Target Solution Release into the IU Cell,” SHINE considered an MHA for the IF as well as the RPF. While an evaluation of the MHA for the IF is provided in SER Section 13a.4.1, the RPF postulated MHA, as described in SHINE PSAR 13b.2.1, “Maximum Hypothetical Accident in the RPF,” provides the bounding consequences to the public and is therefore considered the MHA for the SHINE facility. An evaluation of the RPF postulated MHA is provided below.

For the RPF, SHINE analyzed an accident scenario with consequences exceeding all credible accidents, called the Maximum Hypothetical Accident (MHA). In the RPF, the MHA was identified as a release of inventory stored in the Noble Gas Removal System (NGRS) tanks, resulting in a maximum release of radiological material to the workers and individual members of the public.

The applicant demonstrated that the dose consequences of the MHA are calculated to be within the regulatory limits of 10 CFR Part 20. A TEDE of 3.59 rem calculated for the workers at the facility. This on-site dose is less than the 5 rem regulatory limit specified in 10 CFR 20.1201. A TEDE of 0.0820 rem is calculated for a member of the public at the site boundary, and a TEDE of 0.0115 rem is calculated at the nearest residence. The off-site doses are less than the 0.1 rem regulatory limit specified in 10 CFR 20.1301.

Because the assumptions of the scenario are bounding, the doses calculated will likely not be exceeded by any accident considered credible. The applicant has also examined more realistic assumptions about operating time and release fractions that decreased the source term significantly compared to the one calculated for the MHA. The staff finds that for the MHA, the health and safety of the facility staff and the public are protected.

On the basis of its review, the staff has determined that the level of detail provided on SHINE’s MHA demonstrates an adequate design basis for a preliminary design and satisfies the applicable acceptance criteria of the ISG Augmenting NUREG-1537, Part 2, Section 13b.1, allowing the staff to make the following relevant findings:

(1) The exposure time of workers is assumed to be 10 minutes, which is conservative for workers trained to evacuate in the event of a radiological release.

(2) For the preliminary design, the confinement and engineered safety features are assumed to function as designed and radioactive material is held up temporarily in the facility and then released under controlled conditions. Realistic but conservative methods are used to compute potential doses and dose commitments to the public in uncontrolled areas and to compute external radiation doses and dose commitments resulting from inhalation by the facility staff. Methods of calculating doses from inhalation or ingestion (or both) and direct exposure to gamma rays from dispersing plumes of airborne radioactive material are applicable and no less conservative than those developed in Chapter 11 of the PSAR.

(3) The applicant has considered the consequences to the public and the facility staff of all credible accidents at the radioisotope production facility. An MHA, which, for this facility, is a release of inventory stored in the NGRS tanks with consequences greater than any credible accident, has been analyzed. The MHA, however, is not considered

to be a credible event for this facility. The RPF MHA serves as a bounding accident analysis for the entire SHINE facility.

(4) Because the assumptions of the scenario are bounding, the doses calculated will likely not be exceeded by any accident considered credible. The applicant has also examined more realistic assumptions about operating time and release fractions that decreased the source term significantly compared to the one calculated for the MHA. Thus, even for the RPF MHA, whose consequences bound all credible accidents possible at the facility, the health and safety of the facility staff and the public are protected.

Therefore, the staff finds that the preliminary analysis of the MHA, as described in SHINE PSAR Section 13b.2.1, is sufficient and meets the applicable regulatory requirements and guidance for the issuance of a construction permit in accordance with 10 CFR 50.35. Further technical or design information required to complete the safety analysis may reasonably be left for later consideration. The staff will confirm that the final design conforms to the design basis during the evaluation of SHINE's FSAR.

13b.4.4 Loss of Containment

SHINE PSAR Sections 6a2.2.2, and 6b.2.2, "Containment," state, in part, that "[t]he SHINE facility does not employ a containment feature. Due to the low temperature and power level of facility operations, the safety analysis demonstrates that confinement features are adequate to mitigate potential accidents." In PSAR Section 13b.2.2, "Loss of Containment," SHINE further states that "[t]he use of confinements as an ESF [engineered safety feature] in the RPF is described in [PSAR] Section 6b.2.1. Control of the target solution is performed by piping systems and tanks. A loss of the integrity of piping systems or tanks containing target solution within the RPF is addressed in [PSAR] Subsection 13b.2.4."

On the basis of its review, the staff has determined that the SHINE confinement features are adequate to mitigate potential accidents and a containment feature is not necessary. SHINE demonstrates an adequate design basis for a preliminary design and satisfies the applicable acceptance criteria of the ISG Augmenting NUREG-1537, Part 2, Section 13b.1.

Therefore, the staff finds that the loss of containment event, as described in SHINE PSAR Section 13b.2.2, is sufficient and meets the applicable regulatory requirements and guidance for the issuance of a construction permit in accordance with 10 CFR 50.35 and 50.40. The staff will confirm that the final design conforms to the design basis during the evaluation of SHINE's FSAR.

13b.4.5 Loss of Normal Electric Power

SHINE PSAR Sections 13b.2.1 and 13b.2.4 discuss the events that could result from the sudden loss of normal electrical power. As stated, in part, in SHINE PSAR Section 13b.2.4, "[t]he isolation dampers are of a fail-safe design, and close on…a loss of power. The total release to RVZ1 through the bubble-tight isolation dampers during the accident is assumed to be no more than 10 percent of the airborne activity in the noble gas storage cell based on design characteristics of the dampers and the response of the RAMs."

On the basis of its review, the staff has determined that the level of detail provided on SHINE's loss of normal electrical power demonstrates an adequate design basis for a preliminary design

and satisfies the applicable acceptance criteria of the ISG Augmenting NUREG-1537, Part 2, Section 13b.1, allowing the staff to make the following relevant findings:

(1) All SR-SSCs are returned to a safe condition in a de-energized state. Any requirement for emergency cooling or ventilation functions is provided as intended in the facility design.

(2) The loss of normal electrical power will not result in an unsafe condition for either the facility staff or members of the public in uncontrolled areas. Chapter 8 of the PSAR describes emergency power to the facility. The emergency supply will power the safety-related equipment and systems required to operate after the loss of normal power.

Therefore, the staff finds that the loss of normal electrical power event, as described in SHINE PSAR Sections 13b.2.1 and 13b.2.4, is sufficient and meets the applicable regulatory requirements and guidance for the issuance of a construction permit in accordance with 10 CFR 50.35 and 50.40. Further technical or design information required to complete the safety analysis may reasonably be left for later consideration. The staff will confirm that the final design conforms to the design basis during the evaluation of SHINE's FSAR.

13b.4.6 External Events

In SHINE PSAR Section 13b.2.3, the applicant has identified seismic events, tornados or high winds, and a small aircraft crash as external events that can affect the RPF. These are treated as design basis accidents for the facility. Flooding has been ruled out due to the site location. The SHINE facility has been designed to survive design basis earthquake, tornado and wind loads including missiles, and aircraft impacts and keep the facility safety functions intact.

On the basis of its review, the staff has determined that the level of detail provided on SHINE's external events demonstrates an adequate design basis for a preliminary design and satisfies the applicable acceptance criteria of the ISG Augmenting NUREG-1537, Part 2, Section 13a2, allowing the staff to make the following relevant finding:

> Chapters 2 and 3 of the PSAR discuss the design of the RPF structures, systems, and components to withstand external events and the potential associated accidents. The radioisotope production facility is designed to withstand the effects of these events. Process operations could continue, provided that there would not be undue risk to the health and safety of the staff, the public, and the environment. Consequences of natural external events that cause facility damage (e.g., seismic events that damage the confinement or containment) are within the bounds discussed for other accidents in this chapter with a resulting dose consequence less than analyzed for the MHA. Therefore, exposure to the staff and the public is within acceptable limits, and external events do not pose an unacceptable risk to the health and safety of the public.

Therefore, the staff finds that the preliminary analysis of external events, as described in SHINE PSAR Section 13b.2.3 is sufficient and meets the applicable regulatory requirements and guidance for the issuance of a construction permit in accordance with 10 CFR 50.35. Further technical or design information required to complete the safety analysis may reasonably be left for later consideration. The staff will confirm that the final design conforms to the design basis during the evaluation of SHINE's FSAR.

13b.4.7 Mishandling or Malfunction of Equipment

SHINE PSAR Section 13b.2.4 presents the evaluation of a malfunction or mishandling of equipment (including vessel/line/valve failures, valve misalignments, and other process equipment failures) that leads to a loss of control of radiological material within the RPF.

Processes conducted within the RPF include the target solution preparation, molybdenum extraction, molybdenum purification, molybdenum packaging, uranyl nitrate conversion, target solution cleanup (UREX), thermal denitration, waste processing, noble gas decay storage, and process vessel vent gas treatment. Most of the associated process piping, vessels, and components are located within hot cells or other enclosures. However, transfer between the major processes is via transfer piping located along pipe trenches in the RPF. The liquid/aqueous radiological process streams that traverse the RPF are the target solution, uranyl nitrate solution, and UREX raffinate. Gaseous transfer lines are also present to transfer off gases from the IF to the NGRS for decay storage. Other process streams exist; however, the above processes represent the greatest radiological risk. Equipment malfunctions, including a loss of integrity of these solution and gas lines, presents the possibility of a radiological release at various locations in the RPF.

The molybdenum extraction, purification, and packaging takes place within the three separate sections of a hot cell referred to as a supercell. There are three supercells within the RPF that are operated in parallel, but independently, to process separate batches of irradiated target solution to extract, purify, and package the molybdenum product. The liquid and solid waste processing, pumping equipment, and storage tanks are located in hot cells and vaults located within the RPF. The NGRS equipment is located within a separate shielded cell within the RPF. Section 13b.2.4 addresses the potential for an inadvertent release of radiological material along the transfer lines throughout the RPF and within process hot cells and shielded cells due to a malfunction of critical equipment. The discussion includes initial conditions and assumptions, identification of causes, sequences of events, damage to equipment, quantitative evaluation of accident evolution, radiation source term analysis, radiological consequence analysis, and safety controls. NRC staff reviewed this discussion and the ISA Summary information in Tables 13b.1-1-4, “Potential Accident Sequences,” and 13b.1-2-1, “Accident Sequences and Associated IROFS,” and determined that the designated SR-SSCs will be available and reliable to control accident consequences and likelihoods to the standards proposed in PSAR Section 1.2.4, “Design Features and Design Bases.”

SHINE calculated the dose consequences of a loss of control of radiological material within the RPF to be within the regulatory limits of 10 CFR Part 20. A TEDE of 3.58 rem is calculated for the workers at the facility. This on-site dose is less than the 5 rem regulatory limit specified in 10 CFR 20.1201. A TEDE of 0.0817 rem is calculated for a member of the public at the site boundary, and a TEDE of 0.014 rem is calculated at the nearest residence. The off-site doses are less than the 0.1 rem regulatory limit specified in 10 CFR 20.1301.

On the basis of its review, the staff has determined that the level of detail provided on SHINE’s loss of control of radiological material within the RPF event demonstrates an adequate design basis for a preliminary design and satisfies the applicable acceptance criteria of the ISG Augmenting NUREG-1537, Part 2, Section 13b.1, allowing the staff to make the following relevant findings:

(1) The exposure time of workers is assumed to be 10 minutes, which should be conservative for workers trained to evacuate in the event of a radiological release.

(2) The applicant adequately considered the consequences of loss of control of radiological material within the RPF events. The consequences of the RPF mishandling or malfunction events have been analyzed and shown to be bounded by the MHA. Radiation doses to the public and staff will be within acceptable limits, and the safety and health of the staff and public will be adequately protected.

Therefore, the staff finds that the preliminary analysis of the RPF mishandling or malfunction events, as described in SHINE PSAR Section 13b.2.4 is sufficient and meets the applicable regulatory requirements and guidance for the issuance of a construction permit in accordance with 10 CFR 50.35 and 50.40. Further technical or design information required to complete the safety analysis may reasonably be left for later consideration. The staff will confirm that the final design conforms to the design basis during the evaluation of SHINE's FSAR.

13b.4.8 Inadvertent Nuclear Criticality in the Radioisotope Production Facility

In SHINE PSAR Section 13b.2.5.2, "Identification of Causes," SHINE discussed four distinct types of postulated criticality scenarios for which engineered controls an design features have been designed to prevent:

(1) Accumulation of metal or oxide fissile material outside of a radiation shielded area of the facility, resulting in an inadvertent criticality.

(2) Accumulation of irradiated solution within a radiation shielded area of the facility, resulting in an inadvertent criticality.

(3) Accumulation of un-irradiated solution outside of a radiation shielded area of the facility, resulting in an inadvertent criticality.

(4) Accumulation of metal or oxide fissile material within a radiation shielded area of the facility, resulting in an inadvertent criticality.

Since SHINE considers an inadvertent criticality event in the RPF as highly unlikely, as it would be prevented by multiple passive safety-related SSCs and administrative controls under an approved margin of subcriticality, no radiological consequence analysis was performed for a radiological consequence analysis.

On the basis of its review, the staff has determined that the level of detail provided on SHINE's inadvertent criticality events discussion demonstrates an adequate design basis for a preliminary design and satisfies the applicable acceptance criteria of the ISG Augmenting NUREG-1537, Part 2, Section 13a2, allowing the staff to make the following relevant finding:

> Since inadvertent criticality events in the RPF are highly unlikely, it is not necessary to perform a radiological consequence analysis. The health and safety of the staff and public will be adequately protected as a result of multiple passive safety-related SSCs and administrative controls designed to prevent a criticality event under an approved margin of subcriticality.

Therefore, the staff finds that the preliminary analysis of inadvertent criticality events, as described in SHINE PSAR Sections 13b.2.5, is sufficient and meets the applicable regulatory requirements and guidance for the issuance of a construction permit in accordance with 10 CFR 50.35 and 50.40. Further technical or design information required to complete the safety analysis may reasonably be left for later consideration. The staff will confirm that the final design conforms to the design basis during the evaluation of SHINE's FSAR.

13b.4.9 Radioisotope Production Facility Fire

As described in SHINE PSAR Section 13b.2.6, the RPF contains processes associated with extraction and purification of the Mo-99 product from irradiated target solution, preparation and recycling of the target solution, and waste processing. Individual chemical processes are located in hot cells and glove boxes which are connected via piping located in pipe trenches throughout the RPF. The equipment and processes in the RPF present a potential for fire. Ignition and fuel sources in this area are primarily small in nature, with the greatest hazards located within process enclosures. In addition to combustibles related to the equipment, there is also the potential for the accumulation of hydrogen in a noble gas storage tank.

The applicant identified potential fire events in the RPF that could occur during operations and maintenance activities and lead to radioactive releases. Fires that started inside the RPF and external fires that propagate into the RPF were considered. Both in-situ and transient sources of combustible material were considered as fuel sources for the fire.

The dose consequences of a fire within the RPF is calculated to be within the regulatory limits of 10 CFR Part 20. A TEDE of 0.578 rem is calculated for the workers at the facility. This on-site dose is less than the 5 rem regulatory limit specified in 10 CFR 20.1201. A TEDE of 0.000877 rem is calculated for a member of the public at the site boundary, and a TEDE of 0.000123 rem is calculated at the nearest residence. The off-site doses are less than the 0.1 rem regulatory limit specified in 10 CFR 20.1301.

On the basis of its review, the staff has determined that the level of detail provided on RPF fires demonstrates an adequate design basis for a preliminary design and satisfies the applicable acceptance criteria of the ISG Augmenting NUREG-1537, Part 2, Section 13b.1, allowing the staff to make the following relevant findings:

(1) The exposure time of workers is assumed to be 10 minutes, which should be conservative for workers trained to evacuate in the event of a radiological release.

(2) The applicant adequately considered the consequences of fires within the RPF. The consequences of the RPF fire event have been analyzed and shown to be bounded by the MHA. Radiation doses to the public and staff will be within acceptable limits, and the safety and health of the staff and public will be adequately protected.

Therefore, the staff finds that the preliminary analysis of RPF fires, as described in SHINE PSAR Sections 13b.2.6, is sufficient and meets the applicable regulatory requirements and guidance for the issuance of a construction permit in accordance with 10 CFR 50.35 and 50.40. Further technical or design information required to complete the safety analysis may reasonably be left for later consideration. The staff will confirm that the final design conforms to the design basis during the evaluation of SHINE's FSAR.

13b.4.10 Analyses of Accidents with Hazardous Chemicals Produced from Licensed Material

The staff evaluated the sufficiency of the analysis of accidents with hazardous chemicals produced from licensed material, as described in SHINE PSAR Section 13b.3, "Analyses of Accidents with Hazardous Chemicals Produced from Licensed Material," in part, by reviewing the chemical process description, chemical accidents description and consequences estimates using the guidance and acceptance criteria from Section 13b.2, "Chemical Process Safety for the Radioisotope Processing Facility," of the ISG Augmenting NUREG-1537, Parts 1 and 2.

Consistent with the review guidance of the ISG Augmenting NUREG-1537, Part 2, Section 13b.2, the staff determined whether the PSAR adequately evaluated the chemical safety of the planned licensed activities and whether the PSAR identified appropriate engineered safety features for construction.

NRC staff's chemical process safety review examined the preliminary process description, information on preliminary process equipment sizes, the description of the hazard analysis, the identified chemical safety-related accidents with their estimated consequences, and identified engineered safety features. The staff also considered the scale of the proposed operation, historical information on accidents for similar facilities (e.g., fuel cycle facilities) and operations, and the general nature of the facility. The staff review focused on determining whether SHINE's proposed design would be adequate to protect against releases and chemical exposures of licensed material, hazardous chemicals produced from licensed material, and chemical hazards that could affect the safety of licensed material.

The 2013 memorandum of understanding between the NRC and the Occupational Safety and Health Administration directs the NRC to oversee chemical safety issues related to: (1) radiation risks of licensed materials, (2) chemical risks of licensed materials, and (3) plant conditions that affect or may affect the safety of licensed materials and thus increase radiation risk to workers, the public, and the environment. The NRC does not oversee plant conditions that do not affect or involve the safety of licensed materials.

PSAR Section 13b described the potential accidents that could be caused by process deviations, operator errors or other events internal to the facility and credible external events, including natural phenomena. NRC staff reviewed the accident analysis and concurred with SHINE's identification of the confinement system as an engineered safety feature important for the mitigation of accidents with hazardous chemicals. The staff also noted that the chemical safety analysis would be updated in the FSAR and would reflect the finalized process design.

NRC staff confirmed that the standards used to assess the consequences to an individual and the public from acute chemical exposure are appropriate for the inhalation exposure pathway.

NRC staff reviewed the chemical process ESFs described in PSAR Section 6b (i.e., confinement), and agree that it would reduce the consequences of accidents involving chemical hazards and licensed materials.

NRC staff determined that the PSAR analyzes the chemical safety of the proposed activity consistent with the existing level of design.

The staff's review of the preliminary analysis of accidents with hazardous chemicals in conjunction with the SHINE's identification of the confinement system as an ESF allows the staff to make the following finding:

> SHINE's preliminary accident analysis in the PSAR has adequately described and assessed accident consequences that could result from the handling, storage, or processing of licensed materials and that could have potentially significant chemical consequences and effects. The PSAR has also identified an ESF (confinement system) that will mitigate the consequences of accidents involving hazardous chemicals and licensed material. There is reasonable assurance that (1) the questions about chemical safety related to licensed material processing can be resolved in the FSAR and (2) the facility can be constructed and operated without undue risk to the health and safety of the public from chemical hazards associated with licensed material.

Further technical or design information required to complete the safety analysis may reasonably be left for later consideration. The staff will confirm that the final design conforms to the design basis during the evaluation of SHINE's FSAR.

13b.4.11 Probable Subjects of Technical Specifications

In accordance with 10 CFR 50.34(a)(5), the staff evaluated the sufficiency of the applicant's identification and justification for the selection of those variables, conditions, or other items which are determined to be probable subjects of technical specifications supporting the SHINE accident analysis, with special attention given to those items which may significantly influence the final design.

SHINE PSAR Table 13b.2.5-1, "Safety-Related SSCs and Technical Specification Administrative Controls to Prevent Criticality Accidents," lists probable administrative technical specification controls to prevent criticality events, including controls placed on solution sampling, filters, differential pressure monitors, and a solvent control program.

SHINE PSAR Section 13b.2.6.8, "Safety Controls," lists installed combustible loading in the RPF and process enclosures is low; administrative control of the admission and storage of transient combustible materials and the performance of hot work is maintained in the RPF; and use of and storage of flammable and combustible liquids and gases is consistent with the facility fire protection program as probable administrative technical specification controls to ensure 10 CFR Part 20 dose limits are not exceeded during an RPF fire event.

SHINE PSAR Section 13b.3.4, "Chemical Process Surveillance Requirements," states that "[p]otential variables, conditions, or other items that will be probable subjects of a technical specification associated with chemical processes controls are provided in Chapter 14." PSAR Sections 14b.2, "Safety Limits and Limiting Safety System Settings," and 14b.2.5 "Limiting Conditions for Operation," provide the guidelines to be followed for selecting safety limits (SLs), limiting safety system settings (LSSSs), and Limiting Conditions for Operation (LCOs) for radiochemical and chemical processing in the SHINE RPF.

Based on the information provided in PSAR Table 13b.2.5-1, as well as Sections 13b.2.6.8, 13b.3.4, 14b.2, and 14b.3 of the SHINE PSAR, the staff finds that identification and justification of the proposed technical specifications, SLs, LSSSs, and LCOs is sufficient and meets the applicable regulatory requirements for the issuance of a construction permit in accordance with 10 CFR 50.35. A detailed evaluation of technical specifications, including LCOs and surveillance requirements, will be performed during the review of SHINE's operating license application.

13b.5 Summary and Conclusions

The staff evaluated descriptions and discussions of SHINE's RPF accident analysis, including probable subjects of technical specifications, as described in SHINE PSAR Section 13b and supplemented by the applicant's responses to RAIs, and finds that the preliminary accident analysis, including the principal design criteria; design bases; information relative to materials of construction, general arrangement, and approximate dimensions; and preliminary analysis and evaluation of the design and performance of structures, systems, and components of the facility: (1) provides reasonable assurance that the final design will conform to the design basis, (2) includes an adequate margin of safety, (3) structures, systems, and components adequately provide for the prevention of accidents and the mitigation of consequences of accidents, and (4) meets all applicable regulatory requirements and acceptance criteria in or referenced in ISG Augmenting NUREG-1537.

The staff further notes that SHINE PSAR Section 13b contains sufficient information to conclude that the engineered safety features would be expected to function as designed to perform their safety functions, and radioactive and chemical hazards associated with SNM can be prevented or mitigated to levels that are acceptable. Realistic, but conservative methods, were used to compute or estimate potential doses and dose commitments to the public in uncontrolled areas and to compute external radiation doses and dose commitments resulting from inhalation by the facility workers. Methods of calculating doses from inhalation or ingestion (or both) and direct exposure to gamma rays from dispersing plumes of airborne radioactive material are applicable and no less conservative than those developed in Chapter 11 of the PSAR.

On the basis of these findings, the staff has made the following conclusions for the issuance of a construction permit in accordance with 10 CFR 50.35 and 50.40:

(1) SHINE has described the proposed design of the systems supporting the accident analysis, including, but not limited to, the principal architectural and engineering criteria for the design, and has identified the major features or components incorporated therein for the protection of the health and safety of the public.

(2) Further technical or design information required to complete the safety analysis of the cooling systems may reasonably be left for later consideration the FSAR.

(3) There is reasonable assurance that, taking into consideration the site criteria contained in 10 CFR Part 100, the proposed facility can be constructed and operated at the proposed location without undue risk to the health and safety of the public.

(4) There is reasonable assurance: (i) that the construction of the SHINE facility will not endanger the health and safety of the public, and (ii) that construction activities can be conducted in compliance with the Commission's regulations.

(5) The issuance of a permit for the construction of the facility would not be inimical to the common defense and security or to the health and safety of the public.

14.0 TECHNICAL SPECIFICATIONS

The principal purpose of the Technical Specifications (TS) is to maintain system performance and safe operation. This is accomplished by addressing limiting or enveloping conditions of design and operation ensuring that emphasis is placed on the safety of the public, the facility staff, and the environment. The TS are typically derived from the facility descriptions and safety considerations contained in the safety analysis report (SAR).

This chapter evaluates the probable subjects of TS (PSTS) for the SHINE irradiation facility (IF) and radioisotope production facility (RPF) as presented in Chapter 14, "Technical Specifications," of the PSAR, as supplemented by the applicant's responses to requests for additional information (RAIs).

14.1 Areas of Review

SHINE PSAR Chapter 14, "Technical Specifications," provides an evaluation of the PSTS identified in the preliminary design of the SHINE facility. SHINE PSAR Section 14a2 covers the PSTS for the IF and Section 14b covers PSTS for the RPF.

The staff reviewed SHINE PSAR Chapter 14 against applicable regulatory requirements using regulatory guidance and standards to assess the sufficiency of the preliminary design for the SHINE facility. The staff reviewed SHINE's identification and justification for the selection of those variables, conditions, or other items which are determined to be probable subjects of technical specifications for the facility, with special attention given to those items which may significantly influence the final design.

Specific areas of review for this chapter included those PSTS identified in the SHINE IF and RPF. Within these review areas, the staff assessed whether the applicant identified PSTS, including relevant safety limits, limiting control settings, limiting conditions for operation, surveillance requirements, design features that affect function, availability, or reliability of structures, systems, or components (SSCs) identified as PSTS, as well as management or administrative measures would ensure the availability of SSCs identified as PSTS.

14.2 Summary of Application

As stated above and described in SHINE PSAR Section 14, the purpose of the TS is to maintain system performance and safe operation emphasizing the safety of the public, the facility staff, and the environment. The summary provided below applies to both the IF and RPF (together, the SHINE facility).

PSAR Sections 14a2 and 14b identify the variables and conditions that are PSTS for the SHINE facility. These may change with the operating license application. These variables and conditions are based on the preliminary design of the SHINE facility. SHINE will submit formal TS with the operating license application as required by 10 CFR 50.36.

These proposed variables have been identified on the premise that this material presents a sound framework upon which a final, complete set of TS can be provided with the operating license application. As stated in SHINE PSAR Section 14a2.1, "Introduction," the format and content of the TS will be written with the guidance provided in ANSI/ ANS 15.1, "The

Development of Technical Specifications for Research Reactors" (ANSI/ANS 2007) (Reference 55). The TS will comply with the regulations in 10 CFR 50.36, "Technical Specifications." While SHINE is not a fuel reprocessing facility, Technical Specifications for SSCs located inside of the SHINE RPF will follow the relevant portions of 10 CFR 50.36 pertaining to fuel reprocessing facilities, as described in the ISG Augmenting NUREG-1537, Part 1, Section 14b, "Radioisotope Production Facility Technical Specifications" (Reference 4).

14.3 Regulatory Basis and Acceptance Criteria

As previously stated, the TS provide an envelope to maintain system performance and safe operation, and are typically derived from the facility descriptions and safety considerations contained in the SAR. Therefore, the regulatory basis and acceptance criteria provided below apply to both the SHINE IF and RPF.

The staff reviewed Chapter 14 of SHINE's PSAR against applicable regulatory requirements, using regulatory guidance and standards, to assess the sufficiency of the preliminary design and performance of SHINE's facility for the issuance of a construction permit. In accordance with paragraph (a) of 10 CFR 50.35, "Issuance of Construction Permits," a construction permit authorizing SHINE to proceed with construction may be issued once the following findings have been made:

(1) SHINE has described the proposed design of the facility, including, but not limited to, the principal architectural and engineering criteria for the design, and has identified the major features or components incorporated therein for the protection of the health and safety of the public.

(2) Such further technical or design information as may be required to complete the safety analysis, and which can reasonably be left for later consideration, will be supplied in the final safety analysis report.

(3) Safety features or components, if any, which require research and development have been described by SHINE and SHINE has identified, and there will be conducted, a research and development program reasonably designed to resolve any safety questions associated with such features or components.

(4) On the basis of the foregoing, there is reasonable assurance that: (i) such safety questions will be satisfactorily resolved at or before the latest date stated in the application for completion of construction of the proposed facility, and (ii) taking into consideration the site criteria contained in part 100, the proposed facility can be constructed and operated at the proposed location without undue risk to the health and safety of the public.

With respect to the last of these findings, the staff notes that the requirements of 10 CFR Part 100 are specific to nuclear power reactors, and therefore not applicable to the SHINE facility. However, the staff evaluated SHINE's site specific conditions using site criteria similar to 10 CFR Part 100, by using the guidance in NUREG-1537. The staff's review evaluated the geography and demography of the site; nearby industrial, transportation, and military facilities; site meteorology; site hydrology; and site geology, seismology, and geotechnical engineering to ensure that issuance of the construction permit will not be inimical to public health and safety.

The staff's evaluation of the preliminary design criteria for the SHINE facility's PSTS does not constitute approval of the safety of any design feature or specification. Such approval will be made following the evaluation of the final design of the SHINE facility TS, as described in the FSAR as part of SHINE's operating license application.

14.3.1 Applicable Regulatory Requirements

The applicable regulatory requirements for the evaluation of SHINE's PSTS are as follows:

- 10 CFR 50.34, "Contents of applications; technical information," paragraph (a), "Preliminary safety analysis report."

14.3.2 Regulatory Guidance and Acceptance Criteria

In applying guidance and acceptance criteria, the staff used its judgment as to which acceptance criteria were relevant to SHINE's proposed facility, as much of this guidance was originally developed for nuclear reactors. Given the similarities in SHINE's proposed facility and non-power research reactors, the staff used established guidance documents and the Commission's regulations to determine the acceptance criteria for demonstrating compliance with 10 CFR regulatory requirements. For example, the staff used:

- NUREG-1537, Part 1, "Guidelines for Preparing and Reviewing Applications for the Licensing of Non-Power Reactors, Format and Content," issued February 1996 (Reference 4).

- NUREG-1537, Part 2, "Guidelines for Preparing and Reviewing Applications for the Licensing of Non-Power Reactors, Standard Review Plan and Acceptance Criteria," issued February 1996 (Reference 5).

- "Final Interim Staff Guidance [ISG] Augmenting NUREG-1537, Part 1, 'Guidelines for Preparing and Reviewing Applications for the Licensing of Non-Power Reactors: Format and Content,' for Licensing Radioisotope Production Facilities and Aqueous Homogeneous Reactors," dated October 17, 2012 (Reference 6).

- "Final Interim Staff Guidance Augmenting NUREG-1537, Part 2, 'Guidelines for Preparing and Reviewing Applications for the Licensing of Non-Power Reactors: Standard Review Plan and Acceptance Criteria,' for Licensing Radioisotope Production Facilities and Aqueous Homogeneous Reactors," dated October 17, 2012 (Reference 7).

As stated in the ISG Augmenting NUREG-1537, the staff determined that certain guidance originally developed for heterogeneous non-power research and test reactors is applicable to aqueous homogenous facilities and production facilities. SHINE used this guidance to inform the design of its facility and prepare its PSAR. The staff's use of reactor-based guidance in its evaluation of the SHINE PSAR is consistent with the ISG Augmenting NUREG-1537.

As appropriate, additional guidance (e.g., NRC regulatory guides, Institute of Electrical and Electronics Engineers (IEEE) standards, American National Standards Institute/American Nuclear Society (ANSI/ANS) standards) has been used in the staff's review of SHINE's PSAR. The use of additional guidance is based on the technical judgment of the reviewer, as well as references in NUREG-1537, Parts 1 and 2; the ISG Augmenting NUREG-1537, Parts 1 and 2;

and the SHINE PSAR. Additional guidance documents used to evaluate SHINE's PSAR are provided as references in Appendix B of this SER.

14.4 Review Procedures, Technical Evaluation, and Evaluation Findings

As described in SHINE PSAR Section 14, this section evaluates the SHINE PSTS based on the preliminary design of the SHINE facility. The TS will be submitted with the operating license application as required by 10 CFR 50.36. These PSTS have been formulated on a sound framework upon which a final, complete set of specifications can be developed with the operating license application. The technical evaluation applies to both the SHINE IF and RPF.

The staff performed an evaluation of the PSTS presented in SHINE PSAR Section 14, as supplemented by the applicant's responses to RAIs, to assess the sufficiency of the preliminary design and performance of the SHINE facility for the issuance of a construction permit, in accordance with 10 CFR 50.35(a). The sufficiency of the SHINE facility's PSTS is determined by ensuring the design and performance meet applicable regulatory requirements, guidance, and acceptance criteria, as discussed in Section 14.3, "Regulatory Basis and Acceptance Criteria," of this SER. The results of this technical evaluation are summarized in SER Section 14.5, "Summary and Conclusions."

For the purposes of issuing a construction permit, the identification of the SHINE facility PSTS may be adequately described at a functional or conceptual level. The staff evaluated the sufficiency of the preliminary design of the SHINE facility based on the applicant's design methodology and ability to provide reasonable assurance that the final design will conform to the design bases with adequate margin for safety. As such, the staff's evaluation of the preliminary design of the SHINE facility does not constitute approval of the safety of any design feature or specification. Such approval will be made following the evaluation of the final design of the SHINE facility, as described in the FSAR, as part of SHINE's operating license application.

In accordance with 10 CFR 50.34(a)(5), the staff evaluated the sufficiency of the applicant's identification and justification for the selection of those variables, conditions, or other items which are determined to be probable subjects of technical specifications for the SHINE facility, with special attention given to those items which may significantly influence the final design.

Consistent with the review procedures of NUREG 1537, Part 2, Chapter 14, "Technical Specifications," and the ISG Augmenting NUREG-1537, Part 2, Section 14b, the staff confirmed that the PSTS and basis were determined from the analysis in the PSAR and confirmed that each PSTS is supported by appropriate references to PSAR analyses and statements.

SHINE PSAR Table 4a2-1, "SHINE Facility Proposed Parameters for Technical Specifications," groups anticipated safety limits and limiting safety system settings by chapter, including the bases for the identification and selection of each parameter. Further explanation and analysis of selected parameters is provided in relevant chapters of the SHINE PSAR. The staff's evaluations of SHINE's PSTS are provided in the corresponding chapters of this SER.
The SHINE facility has been designed such that normal operation within the limits of technical specifications will not result in off-site radiation exposure in excess of the limits provided in 10 CFR Part 20.

In the IF, safety limits (SLs) will be placed on important process variables, as necessary to reasonably preserve the integrity of the primary system boundary (PSB) and prevent the

uncontrolled release of radioactivity. SLs may also be established for the character and quality of the target solution. For irradiated and unirradiated special nuclear material outside of the TSV, SLs are derived for criticality accident prevention. Limits are specified, using the double-contingency principal, to avoid a criticality accident with conservative margins of subcriticality. Safety limits will also be developed for radiochemical and chemical processing, according to the regulations in 10 CFR 50.36.

Limiting conditions for operation (LCOs) in both the IF and RPF are derived from the safety analyses and are implemented through administrative or engineered controls to ensure safe operation of the facility.

Surveillance requirements for both the IF and RPF will be provided in TS submitted for the SHINE operating license application.

While, administrative controls will be provided in the SHINE operating license application, Section 14a2.6, "Administrative Controls," of SHINE's PSAR identifies proposed subjects of administrative controls, including criticality safety, as low as reasonably achievable considerations, waste container procurement and transport, fire protection, solvent control, tritium control, light water coolant activity monitoring, and chemical control.

Based on the information provided in SHINE PSAR Chapter 14, as well as other chapters of the SHINE PSAR, the staff finds that identification and justification of the proposed technical specifications is sufficient and meets the applicable regulatory requirements for the issuance of a construction permit in accordance with 10 CFR 50.35. A detailed evaluation of technical specifications, including SLs, LSSSs, LCOs, surveillance requirements, and administrative controls, will be performed during the review of SHINE's operating license application.

14.5 Summary and Conclusions

As described in SHINE PSAR Section 14, this section identifies the SHINE PSTS based on the preliminary design of the SHINE facility. These PSTS have been formulated on a sound framework upon which a final, complete set of specifications can be developed with the operating license application. The summary and conclusions provided below apply to both the SHINE IF and RPF.

The staff evaluated the descriptions and discussions of the SHINE facility's PSTS, as described in Chapter 14 and other relevant chapters of the SHINE PSAR, and finds that the PSTS of the SHINE's SSCs meet all applicable regulatory requirements and acceptance criteria in NUREG-1537 and the ISG augmenting NUREG-1537. Based on these findings, the staff has made the following conclusions for the issuance of a construction permit in accordance with 10 CFR 50.35:

(1) Further technical or design information required to complete the safety analysis of the SHINE TS may reasonably be left for later consideration the FSAR.

(2) There is reasonable assurance that, taking into consideration the site criteria contained in 10 CFR Part 100, the proposed facility can be constructed and operated at the proposed location without undue risk to the health and safety of the public.

15.0 FINANCIAL QUALIFICATIONS

Financial qualifications establish whether an applicant is financially qualified to own, construct, operate, and decommission a non-power production or utilization facility. Financial qualifications related to the issuance of a construction permit include estimates of construction costs, estimates of fuel cycle costs, and sources to cover costs.

This chapter of the SHINE Medical Technologies, Inc. (SHINE or the applicant) construction permit safety evaluation report (SER) describes the review and evaluation of the U.S. Nuclear Regulatory Commission (NRC) staff (the staff) of SHINE's financial qualifications, as presented in Chapter 15, "Financial Qualifications," of the SHINE PSAR, as supplemented by the applicant's responses to requests for additional information (RAIs).

15.1 Areas of Review

SER Chapter 15, "Financial Qualifications," provides an evaluation of SHINE's financial ability to construct its proposed facility, as presented in SHINE PSAR Chapter 15, within which, SHINE describes its financial ability to construct, operate and decommission the SHINE facility and provides information regarding foreign ownership, control, or domination (FOCD), as well as nuclear insurance and indemnity.

The staff reviewed PSAR Section 15.1, "Financial Ability to Construct the SHINE Facility," against applicable regulatory requirements using regulatory guidance and standards to assess the sufficiency of the financial qualification (FQ) related to the construction of the SHINE facility. As part of this review, the staff evaluated information and discussions of SHINE's FQ, with special attention to the financial ability of the applicant to cover costs of construction.

Areas of review for this section included estimates of construction costs, estimates of fuel cycle costs, and sources to cover costs. SHINE provided additional information related to its financial ability to operate and decommission the SHINE facility. The additional information provided is not required by 10 CFR 50.33(f)(1) and is outside the scope of the financial qualifications necessary for issuing a construction permit, and therefore, will be evaluated further during the review of SHINE's operating license application.

15.2 Summary of Application

PSAR Section 15.1 presents information related to SHINE's financial ability to construct its facility, including discussions demonstrating that it possesses, or has reasonable assurance of obtaining, the funds necessary to cover estimated construction costs and related fuel cycle costs. This section also provides budgetary estimates based on the preliminary design of the SHINE facility and the various committed sources of financing, including equity, debt and government grants.

PSAR Section 15.2, "Financial Ability to Operate the SHINE Facility," presents information demonstrating that SHINE possesses, or has reasonable assurance of obtaining, the funds necessary to cover estimated operating costs for the duration of the license. SHINE provides estimates for the total annual operating costs for each of the first 5 years of operation of the facility.

PSAR Chapter 15.3, “Financial Ability to Decommission the SHINE Facility,” presents information indicating how reasonable assurance will be provided that funds will be available to decommission the facility.

PSAR Sections 15.4, “Foreign Ownership, Control, or Domination,” presents information regarding the makeup of the private corporation, from shareholders to board members.

PSAR Section 15.5, “Nuclear Insurance and Indemnity,” presents information indicating that SHINE is covered by the insurance and financial protection requirements of the Price-Anderson Act, pursuant to Section 170 of the Atomic Energy Act (AEA) of 1954, as amended.

Additional information related to SHINE’s financial qualifications, related to the requirements of 10 CFR 50.33, was submitted by letter dated March 26, 2013, as most recently updated by letter dated September 16, 2015 (Reference 100).

As required by 10 CFR 50.33(f)(1), areas of review for this section included estimates of construction costs, estimates of fuel cycle costs, and sources to cover costs. The additional information SHINE provided related to its financial ability to operate and decommission the SHINE facility is outside the scope of the financial qualifications necessary for issuing a construction permit, and therefore, will be evaluated further during the review of SHINE’s operating license application.

15.3 Regulatory Basis and Acceptance Criteria

The staff reviewed SHINE PSAR Chapter 15 against applicable regulatory requirements, using regulatory guidance and standards, to assess the sufficiency of SHINE’s FQ for the issuance of a construction permit in accordance with the requirements of the Atomic Energy Act of 1954, as amended, and Title 10 of the *Code of Federal Regulations* (10 CFR).

15.3.1 Applicable Regulatory Requirements

The applicable regulatory requirements for the evaluation of the SHINE’s FQ are as follows:

- 10 CFR 50.33, “Contents of applications; general information.”
- 10 CFR 50.40, “Common standards.”
- 10 CFR Part 50, Appendix C, “A Guide for the Financial Data and Related Information Required to Establish Financial Qualifications for Construction Permits and Combined Licenses.”

15.3.2 Regulatory Guidance and Acceptance Criteria

In applying guidance and acceptance criteria, the staff used its judgment as to which acceptance criteria were relevant to SHINE’s proposed facility, as much of this guidance was originally developed for nuclear reactors. Given the similarities in SHINE’s proposed facility and non-power research reactors, the staff used established guidance documents and the Commission’s regulations to determine the acceptance criteria for demonstrating compliance with 10 CFR regulatory requirements. For example, the staff used:

- NUREG-1537, Part 1, "Guidelines for Preparing and Reviewing Applications for the Licensing of Non-Power Reactors, Format and Content," issued February 1996 (Reference 4).

- NUREG-1537, Part 2, "Guidelines for Preparing and Reviewing Applications for the Licensing of Non-Power Reactors, Standard Review Plan and Acceptance Criteria," issued February 1996 (Reference 5).

- "Final Interim Staff Guidance [ISG] Augmenting NUREG-1537, Part 1, 'Guidelines for Preparing and Reviewing Applications for the Licensing of Non-Power Reactors: Format and Content,' for Licensing Radioisotope Production Facilities and Aqueous Homogeneous Reactors," dated October 17, 2012 (Reference 6).

- "Final Interim Staff Guidance Augmenting NUREG-1537, Part 2, 'Guidelines for Preparing and Reviewing Applications for the Licensing of Non-Power Reactors: Standard Review Plan and Acceptance Criteria,' for Licensing Radioisotope Production Facilities and Aqueous Homogeneous Reactors," dated October 17, 2012 (Reference 7).

15.4 Review Procedures, Technical Evaluation, and Evaluation Findings

As described in SHINE PSAR Chapter 15, for the purposes of issuing a construction permit, financial qualifications establish SHINE's financial ability to construct its facility, including discussions demonstrating that it possesses, or has reasonable assurance of obtaining, the funds necessary to cover estimated construction costs and related fuel cycle costs. The technical evaluation provided below in Sections 15.4.1 through 15.4.5 applies to the SHINE facility.

The staff performed an evaluation of the financial information presented in SHINE PSAR Section 15, as supplemented by information provided in letter dated September 16, 2015, and the applicant's responses to RAIs, to assess the sufficiency of SHINE's FQ for the issuance of a construction permit, in accordance with 10 CFR 50.33 and Appendix C to 10 CFR Part 50. The sufficiency of SHINE's financial qualification information is demonstrated by compliance with applicable regulatory requirements, guidance, and acceptance criteria, as discussed in Section 15.3, "Regulatory Basis and Acceptance Criteria," of this SER. The results of this technical evaluation are summarized in SER Section 15.5, "Summary and Conclusions."

As stated above, areas of review for this section included estimates of construction costs, estimates of fuel cycle costs, and sources to cover costs. The additional information SHINE provided related to its financial ability to operate and decommission the SHINE facility, as well as information related to FOCD and nuclear insurance and indemnity is outside the scope of the financial qualifications necessary for issuing a construction permit, and therefore, will be evaluated further during the review of SHINE's operating license application.

15.4.1 Financial Ability to Construct the SHINE Facility

The staff evaluated the sufficiency of SHINE's financial ability to construct the SHINE facility, as described in SHINE PSAR Section 15.1, "Financial Ability To Construct the SHINE Facility," using the guidance and acceptance criteria from Section 15.1, "Financial Ability to Construct a Non-power Reactor," of NUREG-1537, Parts 1 and 2, and the ISG Augmenting NUREG-1537, Parts 1 and 2.

Consistent with the review procedures of NUREG 1537, Part 2, Section 15.1, the staff evaluated the applicant's estimates of construction cost, including calculations of the design architect or the engineering company, and construction bids; estimates of fuel cycle costs related to the target solution; sources of construction funding, including the amounting of funding that is committed, and the amount that is potentially available; and a breakdown of costs into major cost elements, such as material and labor, and include a detailed schedule of construction activity in today's dollars.

In the course of reviewing SHINE's estimates of construction costs, the staff determined that additional information was necessary on the bases for the total production plant costs, support facility costs, plant equipment, and 1-year supply of uranium inventory, in order to determine the adequacy of SHINE's estimated construction costs. This information was necessary to demonstrate compliance with 10 CFR Part 50, Appendix C.I.A.1, "Estimate of Construction Costs," which states that the estimate of construction costs for production and utilization facilities other than nuclear power reactors should be itemized by categories of cost in sufficient detail to permit an evaluation of its reasonableness. Therefore, in RAI FA-1 (Reference 14), SHINE was asked to provide additional information on the bases from which its construction cost estimates were derived.

In response to RAI FA-1 (Reference 20), and pursuant to 10 CFR 50.33(f)(1) and 10 CFR Part 50, Appendix C, Section I.A.1, "Estimate of construction costs," the applicant outlined the projected costs for the construction of the proposed facility in Table FA-1-1, "Revised Estimate of Construction Costs."

The applicant described the basis for each element of the estimate in the table. According to the application, the total plant production plant costs and plant equipment cost estimates were prepared by M.A. Mortenson Company (Mortenson), SHINE's construction consultant. The consultant is an established construction company that provides planning, program management, preconstruction, general contracting, construction management, design-build, and turnkey development across a variety of industries. The support facility costs estimate uses standard construction cost of $130-135/square foot and includes items such as a parking lot, utility hookups, and architect fees.

Additionally, according to the SHINE PSAR, as further clarified in response to RAI FA-1, the initial price of low enriched uranium was provided by the U.S. Department of Energy, National Nuclear Security Administration Production Office at Y-12 National Security Complex in Oak Ridge, Tennessee. The price provided was used by SHINE as the basis to calculate an approximate cost for a one year supply.

The staff finds this response demonstrates an adequate basis for SHINE's construction cost estimates and satisfies the requirements of 10 CFR 50.33(f)(1) and 10 CFR Part 50, Appendix C, Section I.A.1.

Pursuant to 10 CFR Part 50, Appendix C, I.A.2, "Source of construction funds" and as described in SHINE PSAR Section 15.1, SHINE has obtained financing for its development and construction project using various sources of financing, including equity, debt and government grants. As of the time of this evaluation, SHINE has received at least $58 million in commitments, including:

a. Cost sharing agreement with the DOE/NNSA: $25 million
b. Equity financing raised to-date: $11.4 million

c. Alliant Energy shared savings program loan: $4.8 million
d. State of Wisconsin Enterprise Zone Tax Credits: $11.2 million
e. City of Janesville loan packages/guarantees: $4.6 million
f. 90 acres of land for the building site provided by Janesville: $1.0 million

In addition to these commitments, SHINE is in the process of obtaining additional equity capital investments. SHINE expects to finance the construction of the facility under either a short-term lease, debt agreement, or both.

On the basis of its review, the staff has determined the level of detail provided on SHINE's financial qualifications for construction is reasonable and satisfies the applicable acceptance criteria of NUREG-1537, Part 2, Section 15.1 and the ISG Augmenting NUREG-1537, Part 2, Section 15.1, allowing the staff to make the following relevant findings: (1) the applicant has supplied financial information for construction and fuel cycle costs; and (2) there is reasonable assurance that funds will be made available to construct and cover fuel cycle costs for the facility and that the financial status of the applicant regarding construction and fuel cycle costs is in accordance with the requirements of 10 CFR 50 33(f).

Therefore, the staff finds that SHINE's FQ for construction, as described in SHINE PSAR Section 15.1, meets the applicable regulatory requirements and guidance for of the issuance of a construction permit in accordance with 10 CFR 50.33 and 50.40.

15.4.2 Financial Ability to Operate the SHINE Facility

The staff evaluated the sufficiency of SHINE's financial ability to operate the SHINE facility, as described in SHINE PSAR Section 15.2, "Financial Ability to Operate the SHINE Facility," using the guidance and acceptance criteria from Section 15.2, "Financial Ability to Operate a Non-power Reactor," of NUREG-1537, Parts 1 and 2, and the ISG Augmenting NUREG-1537, Parts 1 and 2.

As stated above, areas of review for a construction permit included estimates of construction costs, estimates of fuel cycle costs, and sources to cover costs as required by 10 CFR 50.33(f)(1). The additional information SHINE provided related to its financial ability to operate the SHINE facility is outside the scope of the financial qualifications necessary for issuing a construction permit, and therefore, will be evaluated further during the review of SHINE's operating license application.

15.4.3 Financial Ability to Decommission the SHINE Facility

The staff evaluated the sufficiency of SHINE's financial ability to decommission the SHINE facility, as described in SHINE PSAR Section 15.3, "Financial Ability to Decommission the SHINE Facility," using the guidance and acceptance criteria from Section 15.3, "Financial Ability to Decommission a Non-power Reactor," of NUREG-1537, Parts 1 and 2, and the ISG Augmenting NUREG-1537, Parts 1 and 2.

As stated above, areas of review for a construction permit included estimates of construction costs, estimates of fuel cycle costs, and sources to cover costs as required by 10 CFR 50.33(f)(1). The additional information SHINE provided related to its financial ability to decommission the SHINE facility is outside the scope of the financial qualifications necessary for issuing a construction permit, and therefore, will be evaluated further during the review of SHINE's operating license application.

15.4.4 Foreign Ownership, Control, or Domination (FOCD)

The staff evaluated the sufficiency of SHINE's description of FOCD considerations, as presented in SHINE PSAR Section 15.4, "Foreign Ownership, Control, or Domination (FOCD)," using the regulations at 10 CFR 50.33(d) and guidance and acceptance criteria from Section 15.4, "Foreign Ownership, Control, or Domination (FOCD)," of NUREG-1537, Parts 1 and 2, and the ISG Augmenting NUREG-1537, Parts 1 and 2.

Consistent with 10 CFR 50.33(d) and the guidance in the ISG Augmenting NUREG-1537, the staff confirmed whether the application included "a statement as to whether the applicant is owned, controlled, or dominated by an alien, foreign corporation, or foreign government."

According to the SHINE PSAR, SHINE states that it "is a private, closely held corporation that currently has approximately 25 shareholders…All [ ] current shareholders holding 1 percent or more of SHINE's stock are U.S. citizens or entities owned or controlled by U.S. citizens. All of our current employees holding stock options are U.S. citizens."

Furthermore, SHINE states that "One of the six directors on SHINE's Board is a Canadian citizen with U.S. permanent resident status. The appointment of one citizen of Canada as a director of SHINE has no material impact on SHINE's current compliance with the requirements regarding FOCD in 10 CFR 50.38. SHINE is not acting as an agent or representative of another person in filing the [construction permit] CP application."

On the basis of its review, the staff has determined the level of detail provided on FOCD considerations for construction is reasonable and satisfies the requirements of 10 CFR 50.33(d) and 50.38. Specifically, the staff finds that SHINE is not owned, controlled, or dominated by an alien, foreign corporation, or foreign government.

Therefore, the staff finds that SHINE's FOCD considerations for construction, as described in SHINE PSAR Section 15.4, meet the applicable statutory and regulatory requirements and guidance for of the issuance of a construction permit in accordance with 10 CFR 50.35 and 50.40.

15.4.5 Nuclear Insurance and Indemnity

The staff evaluated the sufficiency of SHINE's nuclear insurance and indemnity considerations, as described in SHINE PSAR Section 15.5, "Nuclear Insurance and Indemnity," using the guidance and acceptance criteria from Section 15.5, "Nuclear Insurance and Indemnity," of NUREG-1537, Parts 1 and 2, and the ISG Augmenting NUREG-1537, Parts 1 and 2.

As stated above, areas of review for a construction permit included estimates of construction costs, estimates of fuel cycle costs, and sources to cover costs as required by 10 CFR 50.33(f)(1). At this time, SHINE has not requested to possess special nuclear material. Therefore, the staff will further evaluate the additional information SHINE provided related to nuclear insurance and indemnity during the review of SHINE's operating license application or when SHINE applies for a license under 10 CFR Part 70 to possess special nuclear material. The construction permit is conditioned such that an operating license will not be issued by the Commission unless SHINE submits proof of financial protection and executes an indemnity agreement as required by Section 170 of the AEA.

15.5 Summary and Conclusions

The staff evaluated the descriptions and discussions of SHINE FQ, as described in Chapter 15 of the SHINE PSAR, as supplemented by information provided in letter dated September 16, 2015, and the applicant's responses to RAIs, and finds that SHINE has: (1) supplied financial information for construction and fuel cycle costs, and (2) provided reasonable assurance that funds will be made available to construct and cover fuel cycle costs for the facility and that the financial status of the applicant regarding construction and fuel cycle costs is in accordance with the requirements of 10 CFR 50 33(f), and therefore, meets all applicable regulatory requirements and acceptance criteria in NUREG-1537 and the ISG augmenting NUREG-1537. The staff also concluded that SHINE is not subject to foreign ownership, control, or domination and that SHINE has provided sufficient information regarding nuclear indemnity and insurance for purposes of a construction permit where no materials license is held.

Therefore, the staff has concluded that SHINE has demonstrated adequate FQ for construction, for the issuance of a construction permit in accordance with 10 CFR 50.35 and 50.40.

16.0 OTHER LICENSE CONSIDERATIONS

SHINE Medical Technologies, Inc. (SHINE or applicant) Preliminary Safety Analysis Report (PSAR) Chapter 16, "Other License Considerations," states that SHINE will utilize "new and appropriately-qualified components and systems to conduct production operations. Discussions regarding used components and systems are not applicable to the SHINE facility." Additionally, SHINE states that its proposed facility will "not contain equipment or facilities associated with direct medical administration of radioisotopes or other radiation-based therapies."

The staff evaluated the descriptions and discussions of the SHINE facility in the PSAR, and finds that the preliminary design of the SHINE facility does not contain prior use components. The staff concluded that an evaluation of the guidelines of Interim Staff Guidance (ISG) Augmenting NUREG-1537, Part 2 and NUREG-1537, Part 2 is not required because:

(1) All equipment to be installed in the facility is new and purpose built. No prior use components are used in the construction of the IF, RFP, or their support systems; and

(2) The facility will not contain equipment of facilities associated with direct medical administration of radioisotopes or other radiation-based therapies.

17.0 DECOMMISSIONING AND POSSESSION-ONLY LICENSE AMENDMENTS

SHINE Medical Technologies, Inc. (SHINE or applicant) Preliminary Safety Analysis Report (PSAR) Chapter 17, "Decommissioning and Possession-Only License Amendments," states that decommissioning information is not required for a construction permit application. As such, the SHINE PSAR does not include a decommissioning plan or report.

The staff evaluated this PSAR chapter and concludes that 10 CFR 50.33(k) requires an applicant for an operating license to submit a decommissioning report. Because SHINE is a construction permit applicant and is not seeking a possession-only license, no decommissioning information need be provided in the PSAR or evaluated for the issuance of a construction permit.

18.0 HIGHLY ENRICHED TO LOW ENRICHED URANIUM CONVERSIONS

SHINE Medical Technologies, Inc. (SHINE or applicant) Preliminary Safety Analysis Report (PSAR) Chapter 18, "Highly Enriched to Low Enriched Uranium Conversion," states that the SHINE facility is "a new facility that uses low enriched uranium." As such, descriptions of uranium conversion are not applicable.

The staff evaluated the descriptions of the SHINE facility in the PSAR, and finds that the preliminary design of the SHINE facility does not utilize highly enriched uranium. The staff concluded that an evaluation of uranium conversion guidelines of Interim Staff Guidance (ISG) Augmenting NUREG-1537, Part 2 and NUREG-1537, Part 2 is not required because SHINE's facility will only utilize low enriched uranium as target material in the target solution vessel.

APPENDIX A. POST CONSTRUCTION PERMIT ACTIVITIES – CONSTRUCTION PERMIT CONDITIONS AND FINAL SAFETY ANALYSIS REPORT COMMITMENTS

A.1 Construction Permit Conditions

The NRC staff (the staff) has determined that additional information is needed to address certain matters related to nuclear criticality safety and radiation protection in the Radioisotope Production Facility (RPF). Therefore, the staff recommends that SHINE's construction permit, should one be granted, be conditioned such that prior to the completion of construction, SHINE shall submit periodic reports to the NRC, at intervals not to exceed 6 months from the date of the construction permit, providing the information set forth below. These conditions are confirmatory in nature and must be satisfied prior to the completion of construction. Additional details on the basis for each condition appear in the technical evaluations of the SHINE construction permit SER, Chapters 6 and 11, "Radiation Protection Program and Waste Management."

Proposed Permit Condition	SER Section	Description
1	6b.4.5	The technical basis for the design of the criticality accident alarm system (CAAS), including a description of the methodology for determining detector placement. The technical basis shall demonstrate that the CAAS will meet the requirements of 10 CFR 70.24(a) and the commitments listed on page 6b-19 of the Preliminary Safety Analysis Report, Revision 0.
2	6b.4.5	The basis for determining that criticality events are "not credible" for radioisotope production facility (RPF) processes even though fissile materials may be present. The basis shall demonstrate that the each such event satisfies the definition of "not credible," as described in the SHINE integrated safety analysis Summary.
3	6b.4.5	Summaries of the criticality safety analysis for the affected processes that include the following: (1) a list of identified criticality hazards, (2) a list of controlled parameters, (3) a description of evaluated normal and abnormal conditions, (4) a description of the licensee's approach to meeting the double contingency principle, and (5) a list of anticipated passive and active engineered controls, including any assumptions, to ensure the process(es) will remain subcritical under normal and credible abnormal conditions. The criticality safety analysis summaries shall demonstrate that all RPF processes will remain subcritical under all normal and credible abnormal conditions and will satisfy the double contingency principle.

Proposed Permit Condition	SER Section	Description
4	6b.4.5	The relevant nuclear criticality safety evaluations (NCSEs) shall address the reactivity contributions from all fissile isotopes or SHINE shall apply an additional subcritical margin to account for neglecting these nuclides. The treatment of fissile nuclides other than U-235, whether through the NCSEs or the addition of subcritical margin, shall demonstrate that all RPF processes will remain subcritical under all normal and credible abnormal conditions.
5	11.4.1	The design information on the RPF supercells, tank vaults containing the liquid waste storage tanks, evaporation hot cells, and liquid waste solidification hot cells demonstrating shielding, and occupancy times within the RPF are consistent with as low as is reasonably achievable practices and dose requirements of 10 CFR Part 20.

A.2 Regulatory Commitments Identified in Response to Requests for Additional Information

In response to requests for additional information, the applicant has identified elements of design, analysis, and administration that require additional research and development or correction. SHINE is tracking the status of these items through its Issues Management Report (IMR) System. The staff determined that resolution of these items is not necessary for the issuance of a construction permit, but the applicant should ensure that these items are fully addressed in the FSAR supporting the issuance of an operating license. The staff is tracking these items as regulatory commitments and will verify their implementation during the review of a SHINE operating license application.

The following regulatory commitments, as identified in SHINE's response to RAIs, are the responsibility of the applicant, and have not yet been fulfilled:

RAI Number	Date and ADAMS Accession Number for SHINE Response to RAI	Description
3.4-1	December 3, 2014 ML14356A527	An IMR has been initiated to track the inclusion of the final seismic analysis results into the FSAR. Specifically, the coefficient of variation (COV) will be determined consistent with Section 3.7.2 of NUREG-0800, and the results of the final seismic analysis will be provided in the FSAR.
3.4-5	December 3, 2014 ML14356A527	An IMR has been initiated to track seismic qualification of piping subsystems for inclusion in the FSAR. SHINE facility piping subsystems that are classified as safety-related will be analyzed using the dynamic analysis method identified in Subsection 3.4.3 of the PSAR, and details of the analysis will be provided in the FSAR.
3.4-5	December 3, 2014 ML14356A527	An IMR has been initiated to track the inclusion of seismic qualification of components in the FSAR. Seismic qualification of components in the SHINE facility will be consistent with the one or more of the methods: qualification by analytical methods only, qualification by tests, and combined methods of qualification. SHINE will update Subsection 3.4.3 in the FSAR to include a discussion of which seismic qualification method is used for which type of component.
3.4-9	April 10, 2015 ML15120A248	An IMR has been initiated to track the inclusion of a description of the seismic monitoring system, as discussed below, in the FSAR. SHINE has decided that for asset protection and business operations purposes, nonsafety-related seismic instrumentation could assist with the timely determination of the accelerations experienced at the plant following a seismic event. Therefore, SHINE will acquire and install a nonsafety-related seismic monitoring system to help establish the acceptability of continued operation of the plant following a seismic event. This system will provide acceleration time histories or response spectra experienced at the facility to assist in verifying that structures, systems, and components (SSCs) important to safety at

RAI Number	Date and ADAMS Accession Number for SHINE Response to RAI	Description
		the SHINE facility can continue to perform their safety functions. SHINE will provide an explanation of the data retrieval and processing procedure(s) and state whether or not a separate computer is required to view the digitized acceleration time histories and generate response spectra in the FSAR.
3.5-2	October 15, 2014 ML14296A189	An IMR has been issued to track the addition of the seismic access point(s) during final design. The production building seismic portion will be provided with at least two safety-related seismic access points in the final design, enabling personnel to exit the building following a seismic event. These exits will ensure that personnel will be able to exit the building and, therefore, will not be exposed to licensed material, a chemical exposure from licensed material, or hazardous chemicals produced from licensed material in excess of the guidelines described in the PSAR.
3.5-7	May 1, 2015 ML15131A464	An IMR has been initiated to track the inclusion of the following information in the FSAR. During detailed design, SHINE will demonstrate that the Control Room will be within reasonable temperatures following a LOOP. Reasonable temperatures are those that will ensure safety-related equipment operability and will ensure that the Control Room Operators can monitor plant conditions following a LOOP. The reasonable temperature range will be determined during detailed design. SHINE will describe the method chosen to ensure the Control Room remains within a reasonable temperature range, and define the reasonable temperature range, in the FSAR.
3.5-7	May 1, 2015 ML15131A464	An IMR has been initiated to track the inclusion of the following information in the FSAR. SHINE will update the UPSS load list provided in Table 8a2.2-1 of the PSAR in the FSAR to include the SRM system. The primary means of monitoring the facility stack will be with the Stack Release Monitoring (SRM) system. This system will provide monitoring of noble gases, aerosols, iodine, and tritium effluents. Although nonsafety-related, SHINE will add the SRM system to the loads powered by the UPSS, and therefore the SRM system will likely be available after a LOOP. The nominal connected load and the nominal demand load for the SRM system will be determined during detailed design.
4a2.2-5	December 3, 2014 ML14356A527	An IMR has been initiated to track the inclusion of the following information in the FSAR: SHINE will update Table 4a2.2-1 of the PSAR with potential fission product precipitate levels and provide details on removing potential precipitates from the target solution in the FSAR.
4a2.8-2	December 3, 2014 ML14356A527	An IMR has been initiated to track completion of the following calculations: SHINE will perform calculations during detailed design that will ensure there is sufficient margin to deflagration limits.

RAI Number	Date and ADAMS Accession Number for SHINE Response to RAI	Description
4a2.8-3	October 15, 2014 ML14296A189	An IMR has been initiated to ensure the final list of automatic trips is provided in the FSAR. It is expected that these trip inputs will include primary system pressure, sweep gas flow, and hydrogen concentration measurements. SHINE will provide a final list of automatic trips in Section 4a2.8 of the FSAR.
4a2.8-4	December 3, 2014 ML14356A527	An IMR has been initiated to ensure that the analysis of the TSV off-gas condenser heat transfer capabilities is performed consistent with the conditions and assumptions described: the condenser analysis will document the inputs and assumptions to the design of the TSV off-gas condenser, including consideration for bounding operating pressures and temperatures, corresponding steam vapor pressure, expected non-condensable gas concentrations, the impact on condenser performance, and operational degradation during the life of the condenser. The required TSV off-gas condenser specifications will be determined based on the bounding inputs and conservative assumptions. Then, an additional 15 percent design margin will be applied to the heat transfer area.
4a2.8-6	October 15, 2014 ML14296A189	An IMR has been initiated to track the inclusion of the results in the FSAR. During detailed design, SHINE will verify that there is no significant amount of NOx gas in the TSV off-gas that could impact the TOGS, and the results will be described in the FSAR.
5a2.2-2	October 15, 2014 ML14296A189	An IMR has been issued to ensure the FSAR contains this information. SHINE will install adequate instrumentation to identify and quantify leakage rates, including very small leaks, and will have the ability to identify leak locations as they relate to allowable leakage limits and the safety functions of the systems. The details on the type and accuracy of the instrumentation will be provided in the FSAR.
6a2.2-1	December 3, 2014 ML14356A527	An IMR has been initiated to track the inclusion of the isolation valve locations in the FSAR, specifically, a diagram of the TPS showing the gloveboxes and double-walled tritium piping is provided in Figure 9a2.7-1 of the PSAR. Isolation valve locations will be determined during detailed design and provided in the FSAR.
6a2.2-3	December 3, 2014 ML14356A527	An IMR has been initiated to track the inclusion of the isolation valve locations in the FSAR. The only significant portion of the tritium inventory that is not in a confinement area or double-walled piping is the tritium in the neutron drivers. The evaluation of the release of tritium from the neutron drivers is described in Subsection 13a2.2.12.3. Isolation valves will isolate the NDAS from the TPS should a leak in NDAS be detected. Isolation valve locations will be determined during detailed design and provided in the FSAR.
6a2.2-7	December 3, 2014 ML14356A527	IMR has been initiated to track the inclusion of the isolation valve locations in the FSAR. The TPS confinement system is described in the SHINE Response to RAI 6a2.2-1. Details of the components that comprise the TPS are described in Subsection 9a2.7.1 of the PSAR.

RAI Number	Date and ADAMS Accession Number for SHINE Response to RAI	Description
		Isolation valve locations will be determined during detailed design and provided in the FSAR. The specific valve locations will be dependent on the final design and layout of the system. However, the valves locations and number will be sufficient to limit consequences from accidents to less than 10 CFR 20 limits.
6a2.2-9	December 3, 2014 ML14356A527	An IMR has been initiated to track the inclusion of the following information in the FSAR. TPS confinement is achieved by the TPS Confinement System. The TPS will also contain isolation valves. As described in the SHINE Response to RAI 6a2.2-1, the necessary locations of isolations valves will be determined from the accident analysis during detailed design, and will include valves that isolate the NDAS from the TPS should a leak in NDAS be detected. Additional detail regarding the TPS isolation valves is also provided in the SHINE Response to RAI 6a2.2-3. Additional isolation valve details will be developed during detailed design, and the FSAR will be updated with a list, details, or locations of these isolation valves.
6a2.2-13	October 15, 2014 ML14296A189	An IMR has been initiated to track the inclusion of a description of the ESFAS interlocks and bypasses, if any, in the FSAR. A description of the ESFAS interlocks and bypasses, if any, will be determined as a part of detailed design and provided in the FSAR.
6b.2-8	October 15, 2014 ML14296A189	An IMR has been initiated to track the inclusion of a description of channels used in RPF ESF actuation that can be bypassed, RICS interlocks (if any), schematics, and functional block diagrams in the FSAR.
6b.3-28	May 1, 2015 ML15131A464	An IMR has been initiated to track the inclusion of the following information in the FSAR. SHINE will update Subsection 6b.3.1 of the PSAR in the FSAR to include a description of the use of moderation as a controlled parameter, as described below. If SHINE uses moderation as a controlled parameter, the following acceptance criteria from NUREG-1520 for moderation control will be met: • SHINE will follow ANSI/ANS-8.22-1997 (R2011). • When process variables can affect the moderation, the accident analysis shows the process variables to be controlled by either safety-related SSCs or licensing basis administrative items. • Moderation is measured by using instrumentation subject to facility administrative controls. • The design of physical structures prevents the ingress of moderators. • When moderation needs to be sampled, dual independent sampling methods are used. • Firefighting procedures for use in a moderation-controlled area evaluate the use of moderator material. • After evaluation of all credible sources of moderation for the potential for intrusion into a moderation-controlled area, the ingress of moderation is prevented or controlled.

RAI Number	Date and ADAMS Accession Number for SHINE Response to RAI	Description
6b.3-29	May 1, 2015 ML15131A464	An IMR has been initiated to track the inclusion of the following information in the FSAR. SHINE will perform an analysis regarding the receipt of uranium with incorrect enrichment and will consider criticality events in the accident analysis associated with receiving the incorrect enrichment. These actions will be performed during detailed design and the analysis results will be included in the FSAR.
6b.3-29	May 1, 2015 ML15131A464	An IMR has been initiated to track the inclusion of the following information in the FSAR. SHINE will update Subsection 6b.3.1 of the PSAR in the FSAR to include a description of the use of enrichment as a controlled parameter, as described below. SHINE considers enrichment to be a controlled parameter. In order to ensure no out-of-spec materials are utilized, SHINE will independently verify uranium enrichment upon receipt. Once a shipment of uranium material is independently verified to assure enrichment is within specifications, then enrichment is no longer a controlled parameter for this material.
7a2.4-1	October 15, 2014 ML14296A189	An IMR has been initiated to ensure the results of the transient analysis are provided in the FSAR. The current TRPS design uses a high neutron flux trip from source range measurements during TSV fill operations and from high range measurements during irradiation operations. Transient behavior will be analyzed using a transient system model currently being completed. Transient systems modeling will be used for the adequacy of the current nuclear trips to prevent unacceptably high reactivity transients as well as verify protection capability in all operating modes, including determining if there is a need for a period trip during filling operations. The results of this analysis will be used as part of detailed design.
8a2.2-1	December 3, 2014 ML14356A527	An IMR has been initiated to track receipt of the test reports. During detailed design, the Class 1E battery chargers and voltage regulating transformers are to be specified to include electrical isolation requirements consistent with IEEE 384-2008. The suppliers of these devices are to submit test reports to demonstrate compliance with the electrical isolation requirements of IEEE 384-2008.
9a2.1-1	December 3, 2014 ML14356A527	An IMR has been initiated to track the inclusion of the following information in the FSAR. RVZ3 areas include the RCA airlocks and additional areas which will be defined during detailed design. SHINE will identify the additional RVZ3 areas and provide an RVZ3 flow diagram in the FSAR.
9a2.3-5	December 3, 2014 ML14356A527	An IMR has been initiated to ensure the Rock County 911 Communications Center's SHINE-specific response information binder provides specific guidance on the use of firefighting foam at the SHINE facility.
9a2.3-7	December 3, 2014 ML14356A527	An IMR has been initiated to ensure that each fire zone is uniquely numbered, and the final FHA provides an assessment of each fire

RAI Number	Date and ADAMS Accession Number for SHINE Response to RAI	Description
		zone. As detailed design is completed, the Fire Hazards Analysis (FHA) will be revised and updated.
9b.7-1	December 3, 2014 ML14356A527	An IMR has been initiated to track the inclusion of the following information into the FSAR: A heavy load will be defined as a load that, if dropped, may cause radiological consequences that challenge 10 CFR 20 limits. The heavy load limit, and the associated load drop analysis, will be determined during detailed design and provided in the FSAR.
11.1-1	December 3, 2014 ML14356A527	An IMR has been initiated to track the inclusion of the following information in the FSAR: Partitioning of airborne radioactive material concentrations associated with normal operations into noble gases, radioiodines, and particulates will be provided in the FSAR.
11.1-3	October 15, 2014 ML14296A189	An IMR has been initiated to track the inclusion of an ALARA policy statement in the Radiation Protection Program. The SHINE Radiation Protection Program will include a management policy statement, demonstrating SHINE's responsibility to maintain occupational and public radiation exposures ALARA.
11.1-8	October 15, 2014 ML14296A189	An IMR has been initiated to track the selection of these locations and their inclusion in the FSAR. Three direct radiation-monitoring stations will be placed in special interest areas such as population centers, nearby residences, or schools. The specific locations will be selected at a later date and provided in the FSAR.
11.1-8	October 15, 2014 ML14296A189	An IMR has been initiated to track the update to Figure 11.1-3 in the FSAR. SHINE will update Figure 11.1-3 of the PSAR in the FSAR to include the additional direct radiation-monitoring stations described above. A total of 16 direct radiation-monitoring stations will be located at the site boundary in each of the 16 compass directions from the site center. The site boundary is depicted in Figure 11.1-3 of the PSAR.
11.1-8	October 15, 2014 ML14296A189	An IMR has been initiated to track the inclusion of the 15 additional direct radiation-monitoring stations described above in the REMP. The nine direct radiation-monitoring locations described in Table 11.1-8 of the PSAR are part of the SHINE Radiological Environmental Monitoring Program (REMP).
11.1-18	May 14, 2015 ML15147A211	An IMR has been initiated to track the inclusion of the following information in the RP Program and in the FSAR. SHINE will provide the following information in the RP Program and in the FSAR, as part of detailed design: (1) Information on the location and conditions which will result in the installation of radiation area monitors (RAMs); and (2) Sufficient information showing that the RAMs will be used in locations where exposures may exceed administrative limits under normal operations or credible accident conditions, as determined by the accident analysis.

RAI Number	Date and ADAMS Accession Number for SHINE Response to RAI	Description
11.1-18	May 14, 2015 ML15147A211	An IMR has been initiated to track the inclusion of the following information in the RP Program. The requirements for radiation surveying and monitoring will be specified in the RP Program. Implementing procedures for the RP Program will specify the types, times, and methods for radiation sampling and monitoring.
11.1-18	May 14, 2015 ML15147A211	An IMR has been initiated to track the inclusion of the following information in the RP Program. Settings for alarm level limits and the methodology to be used to establish these values (e.g., administrative limits) will be specified in the RP Program.
11.1-18	May 14, 2015 ML15147A211	An IMR has been initiated to track the inclusion of the following information in the RP Program. The maintenance and calibration requirements for radiological monitoring equipment will be specified in the RP Program.
11.2-2	December 3, 2014 ML14356A527	An IMR has been initiated to track the inclusion of the following information in the FSAR. Subsection 11.1.2.1 of the PSAR discusses SHINE's commitment to the implementation of an ALARA program. The design features of the Uranyl Nitrate Preparation (UNP) waste streams, while preliminary, are provided below. The UNP subsystem process is used to convert uranyl sulfate from the spent target solution into uranyl nitrate. A step in this process involves pumping the reaction product slurry from the uranyl nitrate conversion tank to the uranyl nitrate centrifuge. The centrifuge provides separation of precipitated sulfates from the uranyl nitrate solution. The sulfate sludge is transferred at the centrifuge discharge to the Solid Radioactive Waste Packaging (SRWP) system. The preliminary concept for transfer of the sulfate sludge to the SRWP system involves moving the sulfate sludge (sulfate solid concentration of 50 percent by weight) from the centrifuge discharge to shielded 55-gallon drums. The centrifuge discharge and the drum loading area will be inside a shielded area of the facility. The loaded drums will be sealed inside the shielded area in order to prevent spills during handling and remotely moved to the waste evaporation hot cell. Following evaporation, the waste will be moved to the liquid waste solidification hot cell for further processing, remote sampling for waste characterization, and surface decontamination activities and packaging. All process steps will be performed consistent with written procedures which incorporate ALARA practices. The operators will be trained in the procedures and ALARA features. Storage of the processed waste for the final decay time and shipment consolidation will be in the Waste Staging and Shipping Building. SHINE will more fully specify waste handling for the UNP subsystem with respect to design features used to assure that ALARA considerations are effectively implemented during detailed design, and provide those details in the FSAR.

RAI Number	Date and ADAMS Accession Number for SHINE Response to RAI	Description
11.2-4	December 3, 2014 ML14356A527	An IMR has been initiated to track the inclusion of the following information in the FSAR. The generation rates, chemical properties, and radiological properties of these two streams (volumes for liquid waste and NGRS condensate) will be determined during detailed design and provided in the FSAR.
11.2-4	December 3, 2014 ML14356A527	An IMR has been initiated to ensure the equipment downstream of the liquid waste storage tanks is specified in detailed design, and is sized to allow processing of one tank while the other is filling in order to maintain the buffer storage capacity.
11.2-4	December 3, 2014 ML14356A527	An IMR has been initiated to ensure the exact dimensions of the Waste Staging and Shipping Building are determined during detailed design and provided in the FSAR.
11.2-4	December 3, 2014 ML14356A527	An IMR has been initiated to ensure the final design of the Waste Staging and Shipping Building incorporates criteria for shielding requirements such that the site dose limits of 10 CFR 20 are met.
11.3-4	May 14, 2015 ML15147A211	An IMR has been issued to track inclusion of the following information in the FSAR. The specific criteria for the ventilation systems, including minimum flow velocity at openings in these systems, maximum differential pressure across filters, and types of filters to be used will be determined in detailed design and provided in the FSAR.
12.1-2	October 15, 2014 ML14296A189	An IMR has been initiated to track this update. The required minimum qualifications for facility staff will be provided in the FSAR.
12.7-2	October 15, 2014 ML14296A189	An IMR has been initiated to ensure letters of agreement made with local support organizations are provided with the SHINE Emergency Plan. SHINE will provide letters of agreement made with local support organizations that would augment and extend the capability of the facility's emergency organization with the SHINE Emergency Plan, which will be provided as part of the SHINE OL Application.
12.7-3	October 15, 2014 ML14296A189	An IMR has been initiated to ensure a description of the positions, duties, and responsibilities of the ERO Staff are provided in the SHINE Emergency Plan. SHINE will describe the positions, duties, and responsibilities of the ERO Staff in the SHINE Emergency Plan, provided as part of the SHINE OL Application.
12.7-8	October 15, 2014 ML14296A189	An IMR has been initiated to ensure an appendix containing a listing of EPIPs with descriptions for each class of emergency is provided with the SHINE Emergency Plan. Consistent with the requirements of Section 4.0 of NUREG-0849 (Reference 19), an appendix to the SHINE Emergency Plan, listing by title, with description, emergency plan implementing procedures (EPIPs) for each class of emergency, will be provided with the SHINE Emergency Plan, provided as part of the SHINE OL Application.
12.7-9	October 15, 2014 ML14296A189	An IMR has been issued to track these changes: (1) Table 5-1 will be supplemented with the changes as described in the RAI response and provided in the SHINE Emergency Plan, provided as part of the

RAI Number	Date and ADAMS Accession Number for SHINE Response to RAI	Description
		SHINE OL Application; and (2) the SHINE EPIPs will contain the changes described in RAI responses. Consistent with Section V of Appendix E to 10 CFR 50, procedures for emergency response will be submitted to the NRC no less than 180 days before the scheduled issuance of the SHINE OL.
12.7-11	October 15, 2014 ML14296A189	An IMR has been initiated to ensure the specific values/setpoints are provided with the SHINE Emergency Plan. The specific values/setpoints such as effluent monitor used for emergency classification will be provided in the SHINE Emergency Plan, provided as part of the SHINE OL Application.
12.7-13	October 15, 2014 ML14296A189	An IMR has been initiated to ensure the clarifying language is provided with the SHINE Emergency Plan with regard to whose responsibility it is to classify an emergency event. Clarifying language will be provided with the SHINE Emergency Plan, provided as part of the SHINE OL Application.
12.7-14	October 15, 2014 ML14296A189	An IMR has been initiated to ensure the summary descriptions are provided in the SHINE Emergency Plan. Consistent with the requirements of Section 7.0 of NUREG-0849 (Reference 19), a summary description of those actions that could be taken to mitigate or correct the problem for each class of emergency will be provided with the SHINE Emergency Plan, provided as part of the SHINE OL Application.
12.7-15	October 15, 2014 ML14296A189	An IMR has been initiated to ensure a description of the methods for assessing collateral damage to the facility is provided in the SHINE Emergency Plan. A description of the methods for assessing collateral damage to the SHINE facility will be provided with the SHINE Emergency Plan, provided as part of the SHINE OL Application.
12.7-17	October 15, 2014 ML14296A189	An IMR has been initiated to ensure a description of the contamination controls is provided in the SHINE Emergency Plan. SHINE will describe the contamination controls that will be in place throughout the facility and in close proximity to the contaminated area in the SHINE Emergency Plan, provided as part of the SHINE OL Application.
12.7-18	October 15, 2014 ML14296A189	An IMR has been initiated to ensure the threshold to categorize personnel being surveyed and evacuated through control points as “contaminated,” and to be decontaminated before release, is defined in the SHINE EPIPs. SHINE will define the threshold to categorize personnel being surveyed and evacuated through control points as “contaminated,” and to be decontaminated before release, in the SHINE EPIPs. Consistent with Section V of Appendix E to 10 CFR 50, procedures for emergency response will be submitted to the NRC no less than 180 days before the scheduled issuance of the SHINE OL.

RAI Number	Date and ADAMS Accession Number for SHINE Response to RAI	Description
12.7-19	October 15, 2014 ML14296A189	An IMR has been initiated to track the inclusion of protective measures and exposure guidelines for emergency personnel in the SHINE Emergency Plan. SHINE will include protective measures and exposure guidelines for emergency personnel in the SHINE Emergency Plan, provided as part of the SHINE OL Application.
12.7-20	October 15, 2014 ML14296A189	An IMR has been initiated to ensure a description of the methods is provided in the SHINE Emergency Plan. SHINE will describe the methods for transmitting radiation dose rates and contamination levels onsite and offsite to the element of the emergency organization responsible for accident assessment in the SHINE Emergency Plan, provided as part of the SHINE OL Application.
12.7-22	October 15, 2014 ML14296A189	An IMR has been initiated to ensure a more complete and clear description of the ESC is provided in the SHINE Emergency Plan. SHINE will provide a more complete and clear description of the Emergency Support Center (ESC), such as its primary location, back-up location, capabilities, equipment, and size, in the SHINE Emergency Plan, provided as part of the SHINE OL Application.
12.7-23	October 15, 2014 ML14296A189	An IMR has been initiated to track the update to the SHINE Emergency Plan. Specifically, for each accident identified in Table 5.1 of the SHINE Preliminary Emergency Plan, SHINE will provide the means of detecting accident conditions, the means of detecting any release of radioactive material or hazardous materials, and the means of alerting the operations staff of the accident conditions with the FSAR.
12.7-24	October 15, 2014 ML14296A189	An IMR has been initiated to ensure a description of where the first aid equipment is located is provided in the SHINE Emergency Plan. SHINE will describe where in the facility the first aid equipment is located in the SHINE Emergency Plan, provided as part of the SHINE OL Application.
12.7-25	October 15, 2014 ML14296A189	An IMR has been initiated to ensure facilities are identified and written agreements are provided as part of the SHINE OL Application. SHINE will identify the facilities in which arrangements have been made to ensure that medical services are available and the medical staff is prepared to handle radiological emergencies in the SHINE Emergency Plan, provided as part of the SHINE OL Application. SHINE will submit the written Letter of Agreement(s) with hospitals to ensure that medical services are available and the medical staff is prepared to handle radiological emergencies as part of the SHINE OL Application.
12.7-26	October 15, 2014 ML14296A189	An IMR has been initiated to ensure a description of whose responsibility it is for decontaminating the ambulance, medical personnel, and the medical facility, and a description of where the procedures for decontamination of emergency medical services/equipment/personnel can be found, is provided in the SHINE

RAI Number	Date and ADAMS Accession Number for SHINE Response to RAI	Description
		Emergency Plan. SHINE will describe whose responsibility it is for decontaminating the ambulance, medical personnel, and the medical facility, and will describe where the procedures for decontamination of emergency medical services/equipment/personnel can be found, in the SHINE Emergency Plan, provided as part of the SHINE OL Application.
12.7-28	October 15, 2014 ML14296A189	An IMR has been issued to track the information request needs associated with contingency planning. SHINE will confirm that arrangements have been made with alternate facilities and ensure that sources of alternate equipment are available, if necessary, in the SHINE Emergency Plan, provided as part of the SHINE OL Application. SHINE will submit the written Letters of Agreement with those alternate facilities, describing services, equipment, and provisions to be provided in an emergency, if necessary, as part of the SHINE OL Application.
12.7-29	October 15, 2014 ML14296A189	An IMR has been initiated to track the update to Section 9.0 of the SHINE Emergency Plane. SHINE will provide a revision to Section 9.0 of the SHINE Preliminary Emergency Plan, removing [“as closely as possible”] from the SHINE characterization of recovery, in the SHINE Emergency Plan, provided as part of the SHINE OL Application.
12.7-30	October 15, 2014 ML14296A189	An IMR has been initiated to ensure a description of the methods and responsibilities for assessing the damage to the facility and status of the facility’s capabilities to safely control radioactive material or hazardous chemicals associated with the process is provided in the SHINE Emergency Plan. SHINE will describe the methods and responsibilities for assessing the damage to the facility and status of the facility’s capabilities to safely control radioactive material or hazardous chemicals associated with the process in the SHINE Emergency Plan, provided as part of the SHINE OL Application.
12.7-31	October 15, 2014 ML14296A189	An IMR has been initiated to ensure such an explanation is provided in the SHINE Emergency Plan. SHINE will explain who will write and who will approve the recovery plans and procedures, what elements will be included, and where the plans will be kept in the SHINE Emergency Plan, provided as part of the SHINE OL Application.
12.7-32	October 15, 2014 ML14296A189	An IMR has been initiated to track the update to Section 10.1 of SHINE Preliminary Emergency Plan. SHINE will provide an update to Section 10.1 of the SHINE Preliminary Emergency Plan to include training targeted to personnel responsible for decision making; personnel responsible for transmitting emergency information and instructions; personnel responsible for accident assessment; radiological monitoring and analysis teams; first aid and rescue personnel; medical support personnel; and police, security, ambulance, and firefighting personnel, in the list of specific training

RAI Number	Date and ADAMS Accession Number for SHINE Response to RAI	Description
		topics in the SHINE Emergency Plan, provided as part of the SHINE OL Application.
12.7-33	October 15, 2014 ML14296A189	An IMR has been initiated to ensure a description of how emergency drills demonstrate personnel protection measures is provided in the SHINE Emergency Plan. SHINE will describe how emergency drills demonstrate personnel protection measures, including controlling and minimizing hazards to individuals during fires, medical emergencies, mitigation activities, search and rescue, and other similar events in the SHINE Emergency Plan, provided as part of the SHINE OL Application.
12.7-34	October 15, 2014 ML14296A189	An IMR has been initiated to ensure the information below are provided in the SHINE Emergency Plan, as part of the SHINE OL Application: a) The topics and general content of the training programs for onsite and offsite emergency response personnel; b) The administration of the training program including responsibility for training, the positions to be trained, the schedule for training, the frequency of retraining, the use of team training, and the estimated number of hours of initial training and retraining; c) The training to be provided on the use of protective equipment such as respirators, protective clothing, monitoring devices, and other equipment used in emergency response; d) The training program for onsite personnel who are not members of the emergency staff; and e) Any special instructions and orientation tours that the licensee would offer to fire, police, medical, and other non-licensee emergency personnel who may be required to respond to an emergency to ensure that they know the emergency plan, assigned duties, and effective response to an actual emergency.
12.7-35	February 6, 2015 ML15043A404	An IMR has been initiated to track the inclusion of the following in the SHINE Emergency Plan: Description of the actions the on-shift operators, to include the actions the Shift Supervisor, Senior Facility Operator, and Facility Operator, as applicable, will take if they cannot ensure their activities can be placed in a safe condition before reporting to the on-site assembly area.
12.7-36	April 10, 2015 ML15120A248	An IMR has been initiated to ensure a description of the actions that will be taken by on-shift operators if they cannot ensure their activities can be placed in a safe condition in the event of an emergency is provided in the SHINE Emergency Plan. SHINE will describe the actions that will be taken by on-shift operators if they cannot ensure their activities can be placed in a safe condition in the event of an emergency in the SHINE Emergency Plan, which will be provided as part of the SHINE Operating License (OL) Application.
12.7-36	April 10, 2015 ML15120A248	An IMR has been initiated to ensure a description of the actions that will be taken by on-shift operators to ensure their activities are placed or remain in a safe condition following a design-basis, beyond design-

RAI Number	Date and ADAMS Accession Number for SHINE Response to RAI	Description
		basis, security, unplanned (e.g., a radiological release or chemical spill), or other type of on-site or off-site event is provided in the SHINE Emergency Plan. SHINE will describe the actions that will be taken by on-shift operators to ensure their activities are placed or remain in a safe condition following a design-basis, beyond design basis, security, unplanned (e.g., a radiological release or chemical spill), or other type of on-site or off-site event in the SHINE Emergency Plan, which will be provided as part of the SHINE OL Application.
12.7-36	April 10, 2015 ML15120A248	An IMR has been initiated to ensure a description of the programmatic processes for individuals and their activities, as well as the safety systems necessary to maintain safe shutdown in the event of an emergency, is provided in the SHINE Emergency Plan. SHINE will describe the programmatic processes for individuals and their activities, as well as the safety systems necessary to maintain safe shutdown in the event of an emergency, in the SHINE Emergency Plan, which will be provided as part of the SHINE OL Application.
12C.3	October 15, 2014 ML14296A189	An IMR has been initiated to ensure the SHINE QAPD, provided as part of the SHINE OL Application, identifies the documents, procedures, and activities which satisfy program requirements, and which specific requirements are considered to be satisfied by such documents, procedures, and activities. SHINE will identify the documents, procedures, and activities which satisfy program requirements, and which specific requirements are considered to be satisfied by such documents, procedures, and activities, in the SHINE QAPD, provided as part of the SHINE OL Application.
13a2-G	December 3, 2014 ML14356A527	An IMR has been initiated to track that accident analysis assumptions are accounted for in the final design of the SHINE facility. Accident analysis assumptions will be accounted for in the design of the SHINE facility.
13a2-G	December 3, 2014 ML14356A527	An IMR has been issued to ensure release fractions are verified in the as constructed facility. As described in Section 3.5 of the PSAR, SSCs that are determined to have safety significance are tested commensurate with the criteria set forth in ANSI/ANS 15.8 1995 (R2013) as implemented by the SHINE Quality Assurance Program Description (QAPD). This testing will include vendor testing, receipt inspection and testing, and as-constructed local and overall leak rate testing to verify the design release fractions in the as-constructed SHINE facility.
13a2.2-5	May 20, 2015 ML15140A734	An IMR has been issued to track the inclusion of the following information in the FSAR. SHINE will ensure that a consistent methodology is applied to the final dose calculations. With the FSAR, SHINE will provide a description of the following: • methodology used to derive the site-specific atmospheric dispersion and deposition (χ/Q and D/Q) values

RAI Number	Date and ADAMS Accession Number for SHINE Response to RAI	Description
		• the evaluation of input parameters related to agricultural storage times, growing periods, and intake delays appropriate for the SHINE site • selection and use of radioiodine partitioning factors applied in the calculations • applied DCFs for the appropriate iodine species • dry and wet deposition effects • source term assumptions and methodology • final dose calculation results • credited engineered controls
13b.1-1	December 3, 2014 ML14356A527	An IMR has been generated to ensure assumptions made in the calculation of chemical source terms and concentrations are verified during detailed design and that the final results are incorporated into the FSAR.
13b.1-3	May 1, 2015 ML15131A464	An IMR has been initiated to track the inclusion of the following information in the FSAR. The specific human actions credited to prevent or mitigate accidents will be identified during detailed design and provided with the FSAR.
13b.1-3	May 1, 2015 ML15131A464	An IMR has been initiated to correct the mitigated likelihood in the accident analysis. The preventer-type controls are the Process Tanks and Piping and the Conduct of Operations Program. The sum of these controls results in a mitigated likelihood of -4. Table 13b.1-1-4 lists a mitigated likelihood for this scenario of -6; however, this number is based on SHINE inadvertently double-counting preventive controls for robust process tanks.
13b.1-3	May 1, 2015 ML15131A464	An IMR has been initiated to track the inclusion of the following information in the accident analysis. SHINE will evaluate an exothermic decomposition of ion exchange resin in contact with nitric acid scenario in the accident analysis during final design.
13b.1-3	May 1, 2015 ML15131A464	An IMR has been initiated correct the unmitigated consequences to the off-site public in the accident analysis. The accident analysis and Table 13b.1-1-4 list an unmitigated consequence to the public of IC, which is based only on the prompt effects of a criticality.
13b.1-3	May 1, 2015 ML15131A464	An IMR has been initiated to clarify the reporting of an LT IC mitigated consequence for workers for “Criticality” Initiating Event Scenario 5, found in Table 13b.1-1-4, since this consequence estimate only applies to criticalities within shielded areas. The mitigated consequences for this scenario are an estimated HC event for workers due to the proximity of workers to a postulated unshielded criticality accident.

A.3 Fulfilled Regulatory Commitments Identified in Response to Requests for Additional Information

SHINE has fulfilled several regulatory commitments initially identified in responses to RAIs. Details of SHINE's fulfillment of these regulatory commitments, as verified by the staff, are provided below:

RAI Number	Date and ADAMS Accession Number for SHINE Response to RAI	Description	Details of Fulfillment and ADAMS Accession Number
1.3-1	October 15, 2014 ML14296A189	The Final Safety Analysis Report (FSAR) will be updated to correct Figure 1.3-3 "Production Building Sections Preliminary Arrangement," of the Preliminary Safety Analysis Report (PSAR), which indicates containment features exist within the SHINE facility.	Incorporated into PSAR via SMT-2015-019 (see ML15161A336)
2.2-3	February 6, 2015 ML15043A404	An IMR has been initiated to track the updates to Subsection 2.2.3.1.3 and Table 2.2-4 in the FSAR. SHINE will update Subsection 2.2.3.1.3 of the PSAR in the FSAR to include a description of the off-site toxic gas release analysis. SHINE will also update Table 2.2-4 of the PSAR in the FSAR to include the chemicals and corresponding quantities considered in the off-site toxic gas release analysis.	Incorporated into PSAR via SMT-2015-019 (see ML15161A336)
2.2-4	February 6, 2015 ML15043A404	An IMR has been initiated to track the update to Subsection 2.2.2.5 in the FSAR. SHINE will update Subsection 2.2.2.5 of the PSAR in the FSAR to include a description of the updated evaluation of the aircraft hazard. Subsections 2.2.2.1 through 2.2.2.4 of the PSAR do not require updates as a result of the updated evaluation of the aircraft hazard.	Incorporated into PSAR via SMT-2015-019 (see ML15161A336)
2.4-5	December 3, 2014 ML14356A527	An IMR has been initiated to track the update to Table 2.4-13 in the FSAR. SHINE will update Table 2.4-13 of the PSAR in the FSAR to include well UJ792 as an additional example receptor.	Incorporated into PSAR via SMT-2015-019 (see ML15161A336)
2.5-6	December 3, 2014 ML14356A527	An IMR has been initiated to track the revision to Subsection 3.4.2.6.3.1 in the FSAR. SHINE will revise Subsection 3.4.2.6.3.1 in the FSAR as follows to more accurately reflect the results of the geotechnical engineering investigations	Incorporated into PSAR via SMT-2015-019 (see ML15161A336)

RAI Number	Date and ADAMS Accession Number for SHINE Response to RAI	Description	Details of Fulfillment and ADAMS Accession Number
		documented in the Preliminary Geotechnical Engineering Report for the SHINE site: (1) SHINE will revise the name of the bearing pressure soil parameter provided in Subsection 3.4.2.6.3.1 of the PSAR to "net allowable static bearing capacity" to facilitate consistency with Section 7.2.1 of the Preliminary Geotechnical Engineering Report for the SHINE site, and (2) SHINE will revise the unit weight provided in Subsection 3.4.2.6.3.1 of the PSAR to 121 lb/ft3 to represent the bulk (moist) unit weight. This bulk unit weight is equivalent to the minimum (dry) density values (118 lb/ft3) provided in Figures C-12, C-13, and C-14 of the Preliminary Geotechnical Engineering Report for the SHINE site multiplied by the average moisture content (three percent) provided in Table C-1 of the Preliminary Geotechnical Engineering Report for the SHINE site.	
3.2-1	December 3, 2014 ML14356A527	Sections 2.3.1.2.9 and 19.3.2.3.6, "Snowpack and Probable Maximum Precipitation (PMP)," contain an administrative error stating the units for the 50- and 100-year interval snowpacks are inches. Consistent with Figure 7-1 of ASCE 7-05, the units for the 50- and 100-year interval snowpacks are lb/ft^2.	Incorporated into PSAR via SMT-2015-019 (see ML15161A336)
3.4-6	October 15, 2014 ML14296A189	An IMR has been initiated to remove the reference to installed seismic instrumentation from Subsection 3.4.4. "Seismic Instrumentation." Neither NUREG-1537 nor the Interim Staff Guidance (ISG) augmenting NUREG-1537 require seismic instrumentation for research reactors or isotope production facilities. Seismic instrumentation is not required as referenced under Section IV(a)(4) of Appendix S to 10 CFR 50 or Section VI(a)(3) of Appendix A to 10 CFR 100, since the SHINE facility is not a nuclear power plant.	As described in the SHINE Response to RAI 3.4-9, SHINE has determined that for asset protection and business operations purposes, a nonsafety-related seismic monitoring system will be installed to help establish the acceptability of continued operation of the plant following a seismic event.

RAI Number	Date and ADAMS Accession Number for SHINE Response to RAI	Description	Details of Fulfillment and ADAMS Accession Number
3.5-1	October 15, 2014 ML14296A189	As a result of further design work and this response, SHINE plans to review and update the ISA and ISA Summary. As recommended in Section 2.5 of NUREG-1513 (Reference 14), SHINE is assembling a knowledgeable and experienced team to perform the review and update. An IMR has been initiated to track any necessary PSAR changes associated with the results of this analysis.	Necessary PSAR changes, resulting from the ISA revision, were described, and provided, via SMT-2014-040 (see ML14356A527).
3.5-4	October 15, 2014 ML14296A189	An IMR has been initiated to track the correction of the Facility Control Room designation in the FSAR. The SHINE Facility Control Room is part of a safety-related, Seismic Category I structure. Table 3.5-1 of the PSAR contains an administrative error, stating the Facility Control Room is a nonsafety-related, Seismic Category III structure. SHINE will correct the designation of the Facility Control Room in the FSAR.	Incorporated into PSAR via SMT-2015-012 (see ML15120A248)
3.5b-2	April 10, 2015 ML15120A248	An IMR has been initiated to track the revision to Table 3.5b-1 in the FSAR. SHINE will revise the “As Applied and Means of Compliance” discussion provided for Criterion 7 in Table 3.5b-1 in the FSAR as shown below. The revised discussion is consistent with the “As Applied and Means of Compliance” discussion provided for Criterion 17, Electric power systems, in Table 3.5a-1 of the PSAR.	Incorporated into PSAR via SMT-2015-019 (see ML15161A336)

RAI Number	Date and ADAMS Accession Number for SHINE Response to RAI	Description	Details of Fulfillment and ADAMS Accession Number
		BASELINE DESIGN CRITERIA 10 CFR 70.64 / **As Applied to SHINE** (7) *Utility services.* The design must provide for continued operation of essential utility services. As Applied and Means of Compliance An on-site electric power system (defined to be the SHINE facility provided power supply) and an off-site (defined to be the public utility transmission network supplied substations) electric power system are provided to permit functioning of structures, systems, and components important to safety. The functions for each system (assuming the other system is not functioning) are to provide sufficient capacity and capability to ensure that the RPF processes remain in a safe condition and confinement integrity and other vital functions are maintained in the event of postulated accidents. The on-site electric power supply systems include a safety-related UPSS, a commercial grade diesel generator system, and the on-site electric distribution system. The UPSS has sufficient independence, redundancy, and testability to perform its safety functions assuming a single failure. Each of the redundant UPSS circuits are designed to be available within a few seconds following a loss of all off-site electric power, to ensure that safety systems requiring Page 9 of 28 electrical power (such as RAMS and CAAS) can perform their safety functions. The diesel generator system performs no safety functions but provides an additional degree of defense-in-depth to the electric power system. Portions of the on-site electric distribution, those circuits which operate in conjunction with the UPSS, are safety-related. The SHINE facility receives a single physically off-site independent power circuit. This off-site power circuit consists of two power feeds connected to two local outdoor transformers. Provisions are included to minimize the probability of losing electric power from the UPSS as a result of or coincident with, the loss of power from the transmission network. Refer to Section 6b and Chapter 8 for a detailed discussion.	
4a2.6-2	October 15, 2014 ML14296A189	An IMR has been initiated to track the correction of Subsection 4a2.6.1. The text should read “will be transferred.” The sentence in Subsection 4a2.6.1 of the PSAR will be corrected in the FSAR to read: “If at any time during the filling process, neutron flux, TSV fill volume, or target solution temperatures are determined to be outside allowable parameters, the entire contents of the TSV will be transferred to the TSV dump tank via gravity by opening the TSV dump valves.”	Incorporated into PSAR via SMT-2015-019 (see ML15161A336)
4a2.8-2	December 3, 2014 ML14356A527	An IMR has been initiated to track the inclusion of the following information in the FSAR: SHINE will update the description of the TSV dimensions in the FSAR to include an increased the headspace of the TSV by increasing the TSV internal height.	Incorporated into PSAR via SMT-2015-019 (see ML15161A336)
4b-1	October 15, 2014 ML14296A189	An IMR has been initiated to track the correction of the typographical error. The FSAR will be updated to correct the typographical error contained in Subsection 4b.1.3.3.3.3 of the PSAR. SHINE PSAR,	Incorporated into PSAR via SMT-2015-019 (see ML15161A336)

RAI Number	Date and ADAMS Accession Number for SHINE Response to RAI	Description	Details of Fulfillment and ADAMS Accession Number
		page 4b-9, contains a typographical error: “ursanium oxide” should be “uranium oxide.”	
4b-2	October 15, 2014 ML14296A189	An IMR has been initiated to track the correction of the typographical error. The FSAR will be updated to correct the typographical error contained in Subsection 4b.4.1.1.4.1 of the PSAR. SHINE PSAR, page 4b-29, contains an apparent typographical error: the text in Section 4b.4.1.1.4.1(b) reads: “The sulfuric acid washes of” should be corrected to read: “The sulfuric acid washes off.”	SHINE has reviewed the wording and determined the wording in the PSAR is correct. See Revision 1 of the SHINE Response to RAI 4b-2, provided via Enclosure 1 of SMT-2015-019 (see ML15161A336).
6a2.2-5	October 15, 2014 ML14296A189	An IMR has been initiated to track the correction to Subsection 6a2.2.1.3. Subsection 6a2.2.1.3 of the PSAR contains an administrative error. SHINE will revise the statement in the FSAR as follows: "Safety-related mechanical, instrumentation, and electrical systems and components are designed to ensure that a single failure of an active component, in conjunction with an initiating event, does not result in the loss of the system’s ability to perform its intended safety functions. The single failure considered is a random failure."	Incorporated into PSAR via SMT-2015-019 (see ML15161A336)
6a2.2-6	October 15, 2014 ML14296A189	An IMR has been initiated to address the error. The SHINE facility has a primary and a secondary fission product barrier. The primary fission product barrier is the primary system boundary. The secondary fission product barrier is designated the confinement boundary or barrier, or just confinement. The SHINE facility does not have a “secondary confinement barrier.” The use of the phrase “secondary confinement barrier” was an administrative error.	Incorporated into PSAR via SMT-2015-019 (see ML15161A336)
6a2.2-10	October 15, 2014 ML14296A189	An IMR has been initiated to track the inclusion of the table in Section 6a2.2 of the FSAR. The bases for the determination of which initiating events have radiological consequences are provided in Section 13a2.2 of the PSAR. SHINE will include the following table in Section 6a2.2 of the FSAR,	Incorporated into PSAR via SMT-2015-019 (see ML15161A336)

RAI Number	Date and ADAMS Accession Number for SHINE Response to RAI	Description	Details of Fulfillment and ADAMS Accession Number
		providing a reference to the Chapter 13 subsection where the specific radiological consequence analysis can be found for each initiating event.	
6b.2-2	October 15, 2014 ML14296A189	An IMR has been initiated to track the correction to Subsection 6b.2.1.3. Subsection 6b.2.1.3 of the PSAR contains an administrative error. SHINE will revise the statement in the FSAR as follows: "Safety-related mechanical, instrumentation, and electrical systems and components are designed to ensure that a single failure of an active component, in conjunction with an initiating event, does not result in the loss of the system's ability to perform its intended safety functions. The single failure considered is a random failure."	Incorporated into PSAR via SMT-2015-019 (see ML15161A336)
6b.2-3	October 15, 2014 ML14296A189	An IMR has been initiated to track the inclusion of the revised sentence in the FSAR. The sentence in Subsection 6b.2.1.4 of the PSAR, which states that systems open to the hot cell atmosphere are provided with redundant isolation valves, will be revised in the FSAR to state the following: "Systems open to the hot cell atmosphere that represent a potential unacceptable source of leakage are provided with redundant isolation valves."	Incorporated into PSAR via SMT-2015-019 (see ML15161A336)
6b.2-5	October 15, 2014 ML14296A189	An IMR has been initiated to track the inclusion of the table in Section 6b.2 of the FSAR. The bases for the determination of which initiating events have radiological and chemical consequences are provided in Section 13b.2 and Section 13b.3 of the PSAR. In the RPF, ESFs are used to mitigate both the radiological and chemical consequences of accidents. SHINE will include the following table in Section 6b.2 of the FSAR, providing a reference to the Chapter 13 subsection where the specific consequence analysis can be found for each initiating event.	Incorporated into PSAR via SMT-2015-019 (see ML15161A336)

<table>
<tr><th>RAI Number</th><th>Date and ADAMS Accession Number for SHINE Response to RAI</th><th>Description</th><th>Details of Fulfillment and ADAMS Accession Number</th></tr>
<tr><td></td><td></td><td>
<table>
<tr><th>Initiating Event (Section 6b.2)</th><th>Identified Consequences (Section 6b.2)</th><th>PSAR Subsection Containing Consequence Analysis</th></tr>
<tr><td>a. Critical equipment malfunction</td><td>Yes (Table 6b.1-1)</td><td>13b.2.4.7</td></tr>
<tr><td>b. Inadvertent nuclear criticality in the RPF</td><td>No</td><td>13b.2.5.7</td></tr>
<tr><td>c. RPF fire</td><td>No</td><td>13b.2.6.7</td></tr>
<tr><td>d. Accidents with hazardous chemicals</td><td>Yes (Table 6b.1-1)</td><td>13b.3.2</td></tr>
<tr><td>e. External events</td><td>No</td><td>13b.2.3</td></tr>
</table>
</td><td></td></tr>
<tr><td>6b.2-6</td><td>December 3, 2014 ML14356A527</td><td>An IMR has been initiated to track correction of the following in the FSAR. Table 6b.1-1 of the PSAR provides the RPF DBAs that are mitigated by the RPF confinement ESF. The RPF MHA is also mitigated by the same confinement ESFs, as it is an extension of a critical equipment malfunction scenario. Section 6b.2 of the PSAR contains an administrative error stating that an RPF fire does not have consequences that require mitigation by ESFs.</td><td>Incorporated into PSAR via SMT-2015-019 (see ML15161A336)</td></tr>
<tr><td>6b.3-1</td><td>December 3, 2014 ML14356A527</td><td>An IMR has been initiated to track the inclusion of the reference manual in the SHINE OL Application. Specifically, the reference manual will contain information such as methodology and assumptions. SHINE will create the reference manual as part of the nuclear criticality safety program during detailed design, and will be provided as part of the SHINE OL Application.</td><td>SHINE provided the Nuclear Criticality Safety Reference Manual via SMT-2015-036 (see ML15222A231).</td></tr>
<tr><td>6b.3-6</td><td>December 3, 2014 ML14356A527</td><td>An IMR has been initiated to track the update to Section 6b.3. SHINE will update Section 6b.3 of the PSAR in the FSAR to add clarification to the statement justifying the use of homogeneous uranium conditions instead of heterogeneous effects.</td><td>Via the SHINE Response to RAI 6b.3-27, provided via Enclosure 1 of SMT-2015-014 (see ML15131A464), SHINE stated that heterogeneity effects will be considered when establishing NCS controls and limits. SHINE revised Subsection 6b.3.1 of the PSAR to reflect consideration of heterogeneity effects via SMT-2015-019</td></tr>
</table>

RAI Number	Date and ADAMS Accession Number for SHINE Response to RAI	Description	Details of Fulfillment and ADAMS Accession Number
			(see ML15161A336).
6b.3-10	December 3, 2014 ML14356A527	An IMR has been initiated to track the correction to Subsection 6b.3.1. Subsection 6b.3.1 of the PSAR contains an administrative error, which states: "… and a layer of neutron absorbing material integral to the tank construction. The second, independent criticality-safety control is that the most reactive concentration of uranium in any tank results in kef f ≤ 0.95, based on MCNP analyses." SHINE will revise the above statement in the FSAR to read: "The second control is the configuration management program. Favorable geometry vessels have been shown to remain subcritical for all credible abnormal process conditions at the optimum concentration of fissile material and changes in design dimensions during operation. The only way to cause the favorable geometry vessels to become critical would be to replace the vessels with a design that is not favorable geometry. This process upset is prevented by the configuration management program. Therefore, all favorable geometry vessels comply with the double contingency principle without need to control concentration."	Via the SHINE Response to RAI 6b.3-24, provided via Enclosure 1 of SMT-2015-014 (see ML15131A464), SHINE provided clarification on how the design for the favorable geometry tanks adheres to the double contingency principle. SHINE revised Subsection 6b.3.1 of the PSAR to reflect this clarification via SMT-2015-019 (see ML15161A336).
6b.3-24	May 1, 2015 ML15131A464	An IMR has been initiated to track the inclusion of the following information in the FSAR. The double contingency principle is met for this potential change in process conditions because 1-TSPS-01T is a favorable geometry tank and any solution leakage from the tank would enter a favorable geometry sump. This leakage would be surveilled via leak detection and alarm and would be self-revealing. SHINE will update Subsection 6b.3.1 of the PSAR in the FSAR to provide clarification on how the design for the favorable geometry tanks adheres to the double contingency principle, as described above.	Incorporated into PSAR via SMT-2015-019 (see ML15161A336)

RAI Number	Date and ADAMS Accession Number for SHINE Response to RAI	Description	Details of Fulfillment and ADAMS Accession Number
9a2.1-3	May 14, 2015 ML15147A211	An IMR has been initiated to address the following error. RVZ3 areas are directly supplied air via the RCA supply AHUs described above. A small amount of air is also transferred from FVZ4 to RVZ3 via the use of airlock doors. The SHINE Response to RAI 3.5-3 (SHINE's December 3, 2014 letter, ML14356A528) contains an administrative error, describing RVZ3 areas as being supplied by RVZ3 fans. There are no RVZ3 fans in the design of the SHINE facility.	No action to be taken here. IMR initiated to identify error. Addressed in SHINE Response to RAI 9a2.1-3.
11.1-5	October 15, 2014 ML14296A189	An IMR has been initiated to track the inclusion of very high radiation areas in the list of restricted area types. The FSAR will be updated to include a definition of very high radiation areas in the list of restricted area types provided in Subsection 11.1.5.1.1.b.	Incorporated into PSAR via SMT-2015-019 (see ML15161A336)
11.1-6	December 3, 2014 ML14356A527	An IMR has been initiated to track the correction in Subsection 11.1.7.2.2.1, Table 11.1-8, and Figure 11.1-3. SHINE inappropriately used the term "CAM" to refer to a continuous air sampler in Subsection 11.1.7.2.2.1 of the PSAR. SHINE will employ continuous air samplers at the stated locations, with the samples collected and analyzed in a laboratory. SHINE will correct the terminology in Subsection 11.1.7.2.2.1, Table 11.1-8, and Figure 11.1-3 of the PSAR in the FSAR.	Incorporated into PSAR via Enclosure 1 of SMT-2015-019 (see ML15161A336)
11.1-13	May 14, 2015 ML15147A211	An IMR has been initiated to address the following inconsistency. Subsection 11.1.1 of the PSAR states that the goal for the normal operations dose rate for normally occupied locations in the facility is 0.25 mrem/hr at the surface, which is inconsistent with Subsections 3.5a.10.2.2 and 3.5b.1.9.2.2 with respect to the design dose rate of 0.25 mrem/hr at 12 in. from the surface.	No additional action to be taken here. IMR initiated to identify error. Addressed via the SHINE Response to RAI 11.1-13 and incorporated into PSAR (see ML15147A211).

<table>
<tr><th>RAI Number</th><th>Date and ADAMS Accession Number for SHINE Response to RAI</th><th>Description</th><th>Details of Fulfillment and ADAMS Accession Number</th></tr>
<tr><td>11.2-3</td><td>October 15, 2014
ML14296A189</td><td>An IMR has been initiated to track the revision to Table 11.2-5. SHINE will revise Table 11.2-5 of the PSAR in the FSAR to require sampling the storage tank after it is filled and mixed, as follows:
<table>
<tr><th>Requirement</th><th>Basis</th></tr>
<tr><td>Sample storage tank after it is filled and mixed.</td><td>A representative sample is required for accurate characterization of liquid waste prior to solidification and disposal.</td></tr>
</table></td><td>Incorporated into PSAR via SMT-2015-019 (see ML15161A336)</td></tr>
<tr><td>11.2-3</td><td>October 15, 2014
ML14296A189</td><td>An IMR has been initiated to track the revision to Table 11.2-5. SHINE will revise Table 11.2-5 in the FSAR to show an influent volume of approximately 52,000 gallons per year, or roughly 1040 gallons per week based on 50 weeks of operation per year.</td><td>Incorporated into PSAR via SMT-2015-019 (see ML15161A336)</td></tr>
<tr><td>11.2-3</td><td>October 15, 2014
ML14296A189</td><td>An IMR has been initiated to track the revision to Table 11.2-5. SHINE will revise Table 11.2-5 in the FSAR to show an influent volume of approximately 35,000 gallons per year, or roughly 700 gallons per week based on 50 weeks of operation per year.</td><td>Incorporated into PSAR via SMT-2015-019 (see ML15161A336)</td></tr>
<tr><td>11.2-3</td><td>October 15, 2014
ML14296A189</td><td>An IMR has been initiated to track the revision to Table 11.2-1. SHINE will revise Table 11.2-1 of the PSAR in the FSAR to show an influent volume of approximately 52,000 gallons per year of liquid waste, consistent with the revision to Table 11.2-5 described above.</td><td>Incorporated into PSAR via SMT-2015-019 (see ML15161A336)</td></tr>
<tr><td>11.2-4</td><td>December 3, 2014
ML14356A527</td><td>An IMR has been initiated to track the revision to Table 11.2-1. SHINE will revise Table 11.2-1 of the PSAR in the FSAR to show an influent volume of approximately 52,000 gallons per year of liquid waste. The waste volumes provided in the last six rows of Table 11.2-1 will be revised as follows:
<table>
<tr><th>Description</th><th>Matrix</th><th>Class as Generated</th><th>As Generated Amount</th><th>As Generated Units</th><th>As Shipped (cubic feet(ft^3))</th><th>Ship Type</th><th>Destination</th></tr>
<tr><td>Spent Washes</td><td>Liquid[a]</td><td>A</td><td>2100</td><td rowspan="7">gallons/yr</td><td rowspan="7">14,000[b]</td><td rowspan="7">LSA</td><td rowspan="7">Energy Solutions</td></tr>
<tr><td>Rotary Evaporator Condensate</td><td>Liquid[a]</td><td>A</td><td>200</td></tr>
<tr><td>UREX Raffinate</td><td>Liquid[a]</td><td>B</td><td>27,000</td></tr>
<tr><td>NO_x Scrubber Solution</td><td>Liquid[a]</td><td>A</td><td>20,000</td></tr>
<tr><td>Decontamination Waste</td><td>Liquid[a]</td><td>A</td><td>400</td></tr>
<tr><td>Spent Eluate Solution</td><td>Liquid[a]</td><td>A</td><td>2600</td></tr>
</table>
a) This liquid waste discharged from the various processes at the SHINE facility is either solidified and then shipped to a waste depository or reused.
b) As shipped volume of waste is in the form of concrete. Total liquid volume of approximately 52,000 gallons/yr is reduced via evaporation to approximately 35,000 gal/yr (volume reduction factor of 1.5). The liquid waste is then solidified by adding Portland cement (or equivalent). Concrete volume is estimated using a conservative waste to cement ratio of 0.5.</td><td>Incorporated into PSAR via SMT-2015-019 (see ML15161A336). Revised to reflect Revision 1 of the SHINE Response to RAI 11.2-4, provided via Enclosure 3 of SMT-2015-004 (see ML15043A404).</td></tr>
</table>

<table>
<tr><th>RAI Number</th><th>Date and ADAMS Accession Number for SHINE Response to RAI</th><th>Description</th><th>Details of Fulfillment and ADAMS Accession Number</th></tr>
<tr><td>11.2-4</td><td>December 3, 2014
ML14356A527</td><td>An IMR has been initiated to track the revision to Table 9b.7-7. Table 9b.7-7 of the PSAR provides the waste stream chemical characterizations. To be consistent with the revision to Table 11.2-1, SHINE will revise the waste volumes provided in Table 9b.7-7 in the FSAR, as follows:
<table>
<tr><th>Description</th><th>Matrix</th><th>Class as Generated</th><th>Contents</th><th>Volume</th><th>Volume as Shipped (ft^3)</th><th>55-gallon drum equivalent as shipped</th><th>Ship Type</th><th>Destination</th></tr>
<tr><td>Spent Washes</td><td>Liquid[a]</td><td>A</td><td>[1.26% potassium permanganate oxidizer]</td><td>2100 gallons/yr</td><td></td><td></td><td></td><td></td></tr>
<tr><td>Rotovar Condensate</td><td>Liquid[a]</td><td>A</td><td>[2.5% potassium permanganate 3.39% ammonium hydroxide]</td><td>200 gallons/yr</td><td></td><td></td><td></td><td></td></tr>
<tr><td>UREX Raffinate</td><td>Liquid[a]</td><td>B</td><td>[pH less than 1 nitric acid, 0.01% total U, 0.28% AHA, sulfuric and trace organics.]</td><td>27,000 gallons/yr</td><td>14,000[b]</td><td>2100[c]</td><td>LSA</td><td>Energy Solutions</td></tr>
<tr><td>Decontamination Waste</td><td>Liquid[a]</td><td>A</td><td>Decon fluid unknown</td><td>400 gallons/yr</td><td></td><td></td><td></td><td></td></tr>
<tr><td>Spent Eluate Solution</td><td>Liquid[a]</td><td>A</td><td>[0.1M (0.4%) sodium hydroxide]</td><td>2600 gallons/yr</td><td></td><td></td><td></td><td></td></tr>
<tr><td>NO_x Scrubber Solution</td><td>Liquid[a]</td><td>A</td><td>[0.3M (1.2%) sodium hydroxide]</td><td>20,000 gallons/yr</td><td></td><td></td><td></td><td></td></tr>
</table>
a) This liquid waste discharged from the various processes at the SHINE facility is either solidified and then shipped to a waste depository or reused.
b) As shipped volume of waste is in the form of concrete. Total liquid volume of approximately 52,000 gallons/yr is reduced via evaporation to approximately 35,000 gal/yr (volume reduction factor of 1.5). The liquid waste is then solidified by adding Portland cement (or equivalent). Concrete volume is estimated using a conservative waste to cement ratio of 0.5.
c) A 55-gallon drum, filled to 90 percent to account for minor voiding, has a volume of approximately 6.6 ft^3.</td><td>Incorporated into PSAR via SMT-2015-019 (see ML15161A336). Revised to reflect Revision 1 of the SHINE Response to RAI 11.2-4, provided via Enclosure 3 of SMT-2015-004 (see ML15043A404).</td></tr>
<tr><td>11.2-4</td><td>December 3, 2014
ML14356A527</td><td>An IMR has been initiated to track the update to Figure 9b.7-5 in the FSAR. A liquid process flow diagram is provided as Figure 9b.7-5 of the PSAR. Figure 11.2-4-1, below, provides a modified version of Figure 9b.7-5 showing expected liquid waste generation rates and chemical and radiological properties for the liquid waste streams, washes, rinses, and chemical additions that flow to the liquid waste storage tanks (1-RLWS-01TA/B). Figure 11.2-4-1 also shows tank capacities, processing flow rates, a location for interfacing with temporary mobile systems if needed, and an estimate of the area needed for decay in storage. SHINE will update Figure 9b.7-5 of the PSAR in the FSAR to incorporate the process details described above.</td><td>Incorporated into PSAR via SMT-2015-019 (see ML15161A336)</td></tr>
</table>

RAI Number	Date and ADAMS Accession Number for SHINE Response to RAI	Description	Details of Fulfillment and ADAMS Accession Number
		Figure 11.2-4-1: RLWE Liquid Waste Evaporator and Storage System Process Flow Diagram 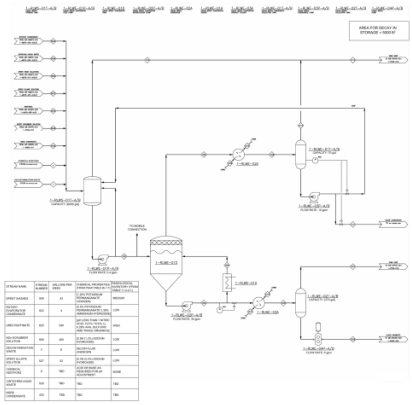	
11.2-4	December 3, 2014 ML14356A527	An IMR has been initiated to track the revision to Table 9b.7 7. Table 9b.7-7 of the PSAR provides the waste stream chemical characterizations and the expected liquid waste generation rates. Table 9b.7-7 will be revised in the FSAR to be consistent with the waste generation rates in the corrected Table 11.2-1.	Incorporated into PSAR via SMT-2015-019 (see ML15161A336). Revised to reflect Revision 1 of the SHINE Response to RAI 11.2-4, provided via Enclosure 3 of SMT-2015-004 (see ML15043A404).
12.1-1	October 15, 2014 ML14296A189	An IMR has been initiated to track the update to Subsection 12.1.2 and Figure 12.1-1. SHINE will update Subsection 12.1.2 in the FSAR to provide a description of the SHINE management levels, consistent with Section 6.1.1 of ANSI/ANS-15.1-2007. SHINE will also update Figure 12.1-1 in the FSAR to include the SHINE Review and Audit Committee and the Radiation Protection Supervisor in the SHINE organizational chart.	A description of the SHINE management levels was incorporated into the PSAR via SMT-2015-019 (see ML15161A336). The review/audit committees were included in the SHINE organizational chart (Figure 12.1-1) via Revision 1 of the SHINE Response to RAI 12.1-1, provided via SMT-2015-039 (See ML15258A348).
12.1-1	October 15, 2014 ML14296A189	An IMR has been initiated to track the update to Subsection 12.1.2. SHINE will update Subsection 12.1.2 in the FSAR to incorporate the responsibilities described above. Responsibility for the safe operation	Incorporated into PSAR via SMT-2015-019 (see ML15161A336)

RAI Number	Date and ADAMS Accession Number for SHINE Response to RAI	Description	Details of Fulfillment and ADAMS Accession Number
		of the SHINE facility shall be with the chain of command established in the SHINE functional organization chart. Individuals at the various management levels, in addition to having responsibility for the policies and operation of the SHINE facility, shall be responsible for safeguarding the public and facility personnel from undue radiation exposures and for adhering to all requirements of the operating license and technical specifications.	
12.1-2	October 15, 2014 ML14296A189	An IMR has been initiated to ensure this information is added to the FSAR. The FSAR will state that the licensed operator training program, including the requalification training program, will be developed and implemented consistent with 10 CFR 55 as it pertains to non-power facilities (e.g., 10 CFR 55.40(d)).	Incorporated into PSAR via SMT-2015-019 (see ML15161A336)
12.1-2	October 15, 2014 ML14296A189	An IMR has been initiated to ensure this information is added to the FSAR. The FSAR will state that SHINE will comply with the requirements of 10 CFR 55 as it pertains to non-power facilities (e.g., 10 CFR 55.40(d), 10 CFR 55.53(j), 10 CFR 55.53(k), 10 CFR 55.61(b)(5)). The FSAR will describe how SHINE complies with 10 CFR 55 requirements.	Incorporated into PSAR via SMT-2015-019 (see ML15161A336)
12.2-1	October 15, 2014 ML14296A189	An IMR has been initiated to track the update to Section 12.2. The Plant Manager (PM) holds approval authority for review and audit activities. SHINE will update Section 12.2 in the FSAR to specify this approval authority.	Section 12.2 of the PSAR was revised via Revision 1 of the SHINE Response to RAI 12.2-1, provided via SMT-2015-039, to state the Chief Operating Officer (COO) holds approval authority for review and audit activities (see ML15258A348).
12.2-1	October 15, 2014 ML14296A189	An IMR has been initiated to track the update to Section 12.2. SHINE will update Section 12.2 in the FSAR to incorporate the detail	Incorporated into PSAR via SMT-2015-019 (see ML15161A336)

RAI Number	Date and ADAMS Accession Number for SHINE Response to RAI	Description	Details of Fulfillment and ADAMS Accession Number
		below of how the review and audit committees interact with facility management. The review and audit committees will interact with facility management through the dissemination of meeting minutes and meeting reports. Consistent with Section 6.2.3 of ANSI/ANS-15.1-2007 (Reference 18), SHINE will submit a written report or minutes of the findings and recommendations of the review group to Level 1 management and the review and audit group members in a timely manner after the review has been completed. Consistent with Section 6.2.4 of ANSI/ANS-15.1-2007, SHINE will immediately report deficiencies uncovered that affect nuclear safety to Level 1 management. SHINE will also submit a written report of the findings of the audit to Level 1 management and the review and audit group members within 3 months after the audit has been complete.	
12.2-2	October 15, 2014 ML14296A189	An IMR has been initiated to track the inclusion of 10 CFR 50.59 safety reviews in the list. The FSAR will be updated to include 10 CFR 50.59 safety reviews in the list of items in Subsection 12.2.3 requiring review by the SHINE review and audit committee.	Incorporated into PSAR via SMT-2015-019 (see ML15161A336)
12.2-3	October 15, 2014 ML14296A189	An IMR has been initiated to track the update to Subsection 12.2.4. SHINE will update Subsection 12.2.4 in the FSAR to expand on the description of the SHINE audit function. SHINE will work to establish relationships with other entities to participate in audits of the facility. The audit of the facility operations will include items such as organization and responsibilities, training, IF and RPF operations, procedures, logs and records, experiments, health physics, technical specification compliance, surveillances, audit frequencies, and deficiencies.	Incorporated into PSAR via SMT-2015-019 (see ML15161A336)
12.3-1	October 15, 2014 ML14296A189	An IMR has been initiated to track the update to Section 12.3. SHINE will update Section 12.3 in the FSAR to expand on the	Incorporated into PSAR via SMT-2015-019 (see ML15161A336)

RAI Number	Date and ADAMS Accession Number for SHINE Response to RAI	Description	Details of Fulfillment and ADAMS Accession Number
		description of the SHINE method for the review and approval of procedures. Consistent with Section 6.4 of ANSI/ANS-15.1-2007 (Reference 18), SHINE shall prepare, review, and approve written procedures prior to initiating any of the activities listed in Part (a) of the SHINE Response to RAI 12.3-1. The procedures shall be reviewed by the SHINE review and audit committee and approved by Level 2 management or designated alternates, and such reviews and approvals shall be documented in a timely manner. Substantive changes to procedures related to activities listed in Part (a) of the SHINE Response to RAI 12.3-1 shall be made effective only after documented review by the SHINE review and audit committee and approval by Level 2 management or designated alternates. Minor modifications to the original procedure that do not change their original intent may be made by Level 3 management or higher, but the modifications must be approved by Level 2 or designated alternates. Temporary deviations from the procedures may be made by the responsible shift manager (Level 3 management) or higher individual present, in order to deal with special or unusual circumstances or conditions. Such deviations shall be documented and reported within 24 hours or the next working day to Level 2 management or designated alternates. Review and approval of SHINE procedures shall be documented in a timely manner, consistent with the SHINE Document Control procedure.	
12C.1-3	February 6, 2015 ML15043A404	An IMR has been initiated to track the update to Section 12.9 in the FSAR. SHINE will update Section 12.9 of the PSAR in the FSAR to refer to the current naming convention of the SHINE QAPD.	Incorporated into PSAR via SMT-2015-019 (see ML15161A336)
13a2.1-2	October 15, 2014 ML14296A189	An IMR has been initiated to track the correction to Table 4a2.8-1 in the FSAR. PSB Piping Table 4a2.8-1 of the PSAR	Incorporated into PSAR via SMT-2015-019 (see ML15161A336)

RAI Number	Date and ADAMS Accession Number for SHINE Response to RAI	Description	Details of Fulfillment and ADAMS Accession Number
		contains an administrative error, stating that the TSV Off-Gas Condenser (1-TOGS-01A-A-H) and the TSV Off-Gas Recombiner Condenser (1-TOGS-01A-A-H) will be designed and fabricated to meet ASME BPVC, Section VIII and ASME B31.3, "Process Piping." ASME B31.3 does not apply to the design and fabrication of the TSV Off-Gas Condenser and the TSV Off-Gas Recombiner Condenser. SHINE will correct the applicable codes and standards provided in Table 4a2.8-1 for the TSV Off-Gas Condenser and the TSV Off-Gas Recombiner Condenser in the FSAR.	
13a2.1-8	December 3, 2014 ML14356A527	An IMR has been initiated to track the revision to Subsection 13a2.1.1.1 in the FSAR. SHINE will revise Subsection 13a2.1.1.1 of the PSAR in the FSAR to state that the postulated MHA in the IF is the loss of TSV integrity.	Incorporated into PSAR via SMT-2015-019 (see ML15161A336)
19.2-1	October 15, 2014 ML14296A189	An IMR has been initiated to address equipment material used during construction. The SHINE Response to Transportation Request #3 (SHINE October 4, 2013, letter, ML13303A887) contains an administrative error stating that during construction of the SHINE facility, SHINE intends to have a concrete batch plant located on site. A concrete batch plant will not be located on the proposed SHINE site during construction. Although SHINE has not yet selected the source of construction materials, including concrete, and designated routes to the SHINE site have not yet been determined, SHINE expects all construction materials will be shipped to the project site by commercial truck, utilizing Interstate, U.S., State, and County Highways. SHINE does not expect deliveries of construction materials, including concrete, to go through residential or sensitive areas.	No additional action to be taken here. IMR initiated to identify error. Addressed via the SHINE Response to RAI 19.2-1.
19.2-2	October 15, 2014 ML14296A189	An IMR has been initiated to address whether the preoperational phase was included within the construction phase or the	No additional action to be taken here. IMR initiated to identify

RAI Number	Date and ADAMS Accession Number for SHINE Response to RAI	Description	Details of Fulfillment and ADAMS Accession Number
		operational phase. SHINE did not include the preoperational phase described in Section 19.2 of the PSAR, between the end date of construction activities and the date of commercial operation, in either the construction phase or the operational phase described in Section 19.4 of the PSAR.	error. Addressed via the SHINE Response to RAI 19.2-2.
19.2-4	October 15, 2014 ML14296A189	An IMR has been initiated to address the following: the facility bounding dimensions provided in Subsection 19.4.1.2 of the PSAR and used in the visual impact assessment were based on an earlier facility design, and are not current. Additionally, the conceptual renderings of the SHINE facility provided in Figure 19.4.1-1 of the PSAR were based on an earlier facility design, and are not current.	No additional action to be taken here. IMR initiated to identify error. Addressed via the SHINE Response to RAI 19.2-4.
19.2-4	October 15, 2014 ML14296A189	An IMR has been initiated to address the following: as stated in Table 19.4.1 1 of the PSAR, 14.54 ac. (5.88 ha) will be temporarily disturbed during construction. Section 19.2 of the PSAR contains an administrative error, stating 25.1 ac. would be temporarily disturbed during construction.	No additional action to be taken here. IMR initiated to identify error. Addressed via the SHINE Response to RAI 19.2-4.
19.2-5	October 15, 2014 ML14296A189	An IMR has been initiated to address the following: Section 19.2 of the PSAR contains an administrative error stating decommissioning activities require a peak number of 257 workers. As stated in Subsection 19.4.7.1 of the PSAR, the decommissioning phase will involve a peak number of 261 workers. Revising the peak number of workers during the decommissioning phase from 257 to 261 does not affect the data, calculations, or analyses provided in Chapter 19 of the PSAR.	No additional action to be taken here. IMR initiated to identify error. Addressed via the SHINE Response to RAI 19.2-5.
19.4-1	October 15, 2014 ML14296A189	An IMR has been initiated to address the following: the SHINE Responses to Air Quality Requests #1 and #5 (SHINE's October 4, 2013 letter, ML13303A887) contain an administrative error stating 25.67 acres of land will be permanently converted to industrial facilities during construction	No additional action to be taken here. IMR initiated to identify error. Addressed via the SHINE Response to RAI 19.4-1.

RAI Number	Date and ADAMS Accession Number for SHINE Response to RAI	Description	Details of Fulfillment and ADAMS Accession Number
		activities. As described in Table 19.4.1-1 of the PSAR, SHINE will permanently convert 25.85 acres of land to industrial facilities during construction activities (25.67 acres of agricultural land and 0.18 acres of open space).	
19.4-2	February 6, 2015 ML15043A404	An IMR has been initiated to address the following error. Subsection 19.4.11.2.1 of the PSAR contains an administrative error, stating that the release of the inventory stored in the Noble Gas Removal System (NGRS) storage tanks scenario results in a total effective dose equivalent (TEDE) of 7.98×10^{-2} rem at the site boundary and 1.12×10^{-2} rem for the nearest resident. Subsection 13b.2.1.7 of the PSAR correctly describes the radiological consequences due to a release of inventory stored in the NGRS storage tanks. As described in Subsection 13b.2.1.7, the TEDE to a member of the public for the maximum hypothetical accident (MHA) in the radioisotope production facility (RPF) is 8.20×10^{-2} rem (site boundary) and 1.15×10^{-2} rem (nearest resident).	No additional action to be taken here. IMR initiated to identify error. Addressed via the SHINE Response to RAI 19.4-2.

A.4 Regulatory Commitments Identified Through Meeting with Advisory Committee on Reactor Safeguards

Following the meeting on September 22, 2015, with the Radiation Protection and Nuclear Materials Subcommittee of the Advisory Committee on Reactor Safeguards, SHINE identified elements of design, analysis, and administration that require additional information. SHINE is tracking the status of these items through its Issues Management Report (IMR) System. The staff determined that resolution of these items is not necessary for the issuance of a construction permit, but the applicant should ensure that these items are fully addressed in the FSAR supporting the issuance of an operating license. The staff is tracking these items as regulatory commitments and will verify their implementation during the review of a SHINE operating license application.

The following regulatory commitments, as identified by SHINE, are the responsibility of the applicant, and have not yet been fulfilled:

Date and ADAMS Accession Number for Correspondence	Description
September 28, 2015 ML15271A314	SHINE will provide its strategy for addressing an extended shutdown of the SHINE facility.
September 28, 2015 ML15271A290	SHINE will provide an appropriate definition of “safety-related activities.” SHINE will update Section 1.3 of the Quality Assurance Program Description (QAPD) to include this definition, and provide the updated QAPD as part of the SHINE Operating License (OL) Application.

A.5 Ongoing Research and Development

The provisions of 10 CFR 50.34(a)(8) allow for ongoing research and development to confirm the adequacy of the design of structures, systems, and components to resolve safety questions prior to the completion of construction. In accordance with 10 CFR 50.34(a)(8), and as described in SHINE PSAR Section 1.3.9, “Research and Development,” and in response to RAI G-1, SHINE has identified two ongoing research and development activities, as described below. The staff is tracking these activities and will verify their resolution prior to the completion of construction.

RAI Number	Date and ADAMS Accession Number for Correspondence	Description
G-1	October 15, 2014 ML14296A189	Irradiation and corrosion testing at Oak Ridge National Laboratory to study mechanical performance of materials, as described in the PSAR
G-1	October 15, 2014 ML14296A189	Precipitation studies at Argonne National Laboratory to ensure precipitation of uranyl peroxide in the target solution will not occur.

APPENDIX B. REFERENCES

1. Letter SMT-2013-023 from SHINE Medical Technologies, Inc., "Part Two of the SHINE Medical Technologies, Inc. Application for Construction Permit," dated May 31, 2013, Agencywide Documents Access and Management System (ADAMS) Accession No. ML13172A361).

2. Letter SMT-2013-012 from SHINE Medical Technologies, Inc., "Part One of the SHINE Medical Technologies, Inc. Application for Construction Permit," dated March 26, 2013, ADAMS Accession No. ML13088A192.

3. Letter SMT-2013-033, from SHINE Medical Technologies, Inc., "Submittal of the SHINE Medical Technologies, Inc. Preliminary Emergency Plan," dated September 25, 2013, ADAMS Accession No. ML13269A378.

4. NUREG-1537, Part 1, "Guidelines for Preparing and Reviewing Applications for the Licensing of Non-Power Reactors, Format and Content," February 1996, ADAMS Accession No. ML042430055.

5. NUREG-1537, Part 2, "Guidelines for Preparing and Reviewing Applications for the Licensing of Non-Power Reactors, Standard Review Plan and Acceptance Criteria," February 1996, ADAMS Accession No. ML042430048.

6. "Final Interim Staff Guidance Augmenting NUREG-1537, Part 1, 'Guidelines for Preparing and Reviewing Applications for the Licensing of Non-Power Reactors: Format and Content,' for Licensing Radioisotope Production Facilities and Aqueous Homogeneous Reactors," October 17, 2012, ADAMS Accession No. ML12156A069.

7. "Final Interim Staff Guidance Augmenting NUREG-1537, Part 2, 'Guidelines for Preparing and Reviewing Applications for the Licensing of Non-Power Reactors: Standard Review Plan and Acceptance Criteria,' for Licensing Radioisotope Production Facilities and Aqueous Homogeneous Reactors," October 17, 2012, ADAMS Accession No. ML12156A075.

8. Letter from U.S. Nuclear Regulatory Commission (S. Lynch), to SHINE Medical Technologies, Inc. (R. Bynum), "Exemption from Certain Requirements of 10 CFR 2.101(a)(5), Regarding the Submission of a Construction Permit Application in Two Parts," dated March 20, 2013, ADAMS Accession No. ML13072B195.

9. Letter SMT-2013-010 from SHINE Medical Technologies, Inc., "Request for Exemption to Submit Application for Construction Permit in Two Parts," dated February 18, 2013, ADAMS Accession No. ML13051A007.

10. Letter from U.S. Nuclear Regulatory Commission (S. Lynch), to SHINE Medical Technologies, Inc. (R. Bynum), "Acceptance of Docketing of Part One of the Application for Construction Permit," dated June 25, 2013, ADAMS Accession No. ML13150A280.

11. Letter from U.S. Nuclear Regulatory Commission (S. Lynch), to SHINE Medical Technologies, Inc. (R. Bynum), "Status of the Acceptance Review of Part Two of the

Application for Construction Permit," dated August 28, 2013, ADAMS Accession No. ML13233A356.

12. Letter from U.S. Nuclear Regulatory Commission (S. Lynch), to SHINE Medical Technologies, Inc. (R. Bynum), "Acceptance for Docketing of Part Two of the Application for Construction Permit," dated December 2, 2013, ADAMS Accession No. ML13316B387.

13. SHINE Medical Technologies, Inc., "Preliminary Safety Analysis Report," dated June 16, 2015, ADAMS Package Accession No. ML15175A274.

14. Letter from U.S. Nuclear Regulatory Commission (A. Adams), to SHINE Medical Technologies, Inc. (R. Bynum), "Request for Additional Information Regarding Application for Construction Permit," dated September 19, 2014, ADAMS Accession No. ML14195A159.

15. Letter from U.S. Nuclear Regulatory Commission (D. Hardesty *for* A. Adams), to SHINE Medical Technologies, Inc. (R. Bynum), "Request for Additional Information Regarding Application for Construction Permit," dated January 6, 2015, ADAMS Accession No. ML15005A407.

16. Letter from U.S. Nuclear Regulatory Commission (A. Adams), to SHINE Medical Technologies, Inc. (R. Bynum), "Request for Additional Information Regarding Application for Construction Permit," dated March 25, 2015, ADAMS Accession No. ML15055A116.

17. Letter from U.S. Nuclear Regulatory Commission (S. Lynch), to SHINE Medical Technologies, Inc. (R. Bynum), "Request for Additional Information Regarding Application for Construction Permit," dated April 15, 2015, ADAMS Accession No. ML15099A607.

18. Letter from U.S. Nuclear Regulatory Commission (A. Adams), to SHINE Medical Technologies, Inc. (R. Bynum), "Request for Additional Information Regarding Application for Construction Permit," dated September 24, 2015 ADAMS Accession Package No. ML15259A164.

19. Application from SHINE Medical Technologies, Inc., "Preliminary Safety Analysis Report," dated August 27, 2015, ADAMS Accession Package No. ML15258A431.

20. Letter SMT-2014-033 from SHINE Medical Technologies, Inc., "Application for Construction Permit, Response to Request for Additional Information," dated October 15, 2014, ADAMS Package Accession No. ML14296A189.

21. Letter SMT-2014-040 from SHINE Medical Technologies, Inc., "Application for Construction Permit, Response to Request for Additional Information," dated December 3, 2014, ADAMS Package Accession No. ML14356A527.

22. Letter SMT-2015-004 from SHINE Medical Technologies, Inc., "Application for Construction Permit, Response to Request for Additional Information," dated February 6, 2015, ADAMS Package Accession No. ML15043A404.

23. Letter SMT-2015-008 from SHINE Medical Technologies, Inc., “Application for Construction Permit, Response to Request for Additional Information 11.1-9,” dated March 23, 2015, ADAMS Package Accession No. ML15092A397.

24. Letter SMT-2015-012 from SHINE Medical Technologies, Inc., “Application for Construction Permit, Response to Request for Additional Information,” dated April 10, 2015, ADAMS Package Accession No. ML15120A248.

25. Letter SMT-2015-014 from SHINE Medical Technologies, Inc., “Application for Construction Permit, Response to Request for Additional Information,” dated May 1, 2015, ADAMS Package Accession No. ML15131A464.

26. Letter SMT-2015-018 from SHINE Medical Technologies, Inc., “Application for Construction Permit, Response to Request for Additional Information,” dated May 14, 2015, ADAMS Package Accession No. ML15147A211.

27. Letter SMT-2015-020 from SHINE Medical Technologies, Inc., “Application for Construction Permit, Response to Request for Additional Information 13a2.2-5,” dated May 20, 2015, ADAMS Package Accession No. ML15140A734.

28. Letter SMT-2015-033 from SHINE Medical Technologies, Inc., “Application for Construction Permit, Response to Request for Additional Information,” dated June 19, 2015, ADAMS Package Accession No. ML15183A292.

29. Letter SMT-2015-036 from SHINE Medical Technologies, Inc., “Application for Construction Permit, Response to Request for Additional Information 6b.3-30,” dated June 19, 2015, ADAMS Package Accession No. ML15222A231.

30. Letter SMT-2015-037 from SHINE Medical Technologies, Inc., “Application for Construction Permit, Response to Request for Additional Information,” dated August 7, 2015, ADAMS Package Accession No. ML15236A140.

31. Letter SMT-2013-034 from SHINE Medical Technologies, Inc., “Application for Construction Permit, Response to Environmental Requests for Additional Information,” dated October 4, 2013, ADAMS Accession No. ML13303A887.

32. Letter SMT-2015-019 from SHINE Medical Technologies, Inc., “SHINE Medical Technologies, Inc. Preliminary Safety Analysis Report Revisions Resulting from Request for Additional Information,” dated May 21, 2015, ADAMS Accession No. ML15161A336.

33. Nuclear Waste Policy Act of 1982, Public Law No. 97-425, 96 Stat. 2201, January 7, 1983.

34. National Fire Protection Association, “Standard for the Installation of Sprinkler Systems,” NFPA 13, 2013 Edition, Quincy, MA.

35. SHINE Medical Technologies v. 0 - Chapter 03 - Figures 3.4-001 through 3.4-014, dated May 31, 2013, ADAMS Accession No. ML13172A291.

36. SHINE PSAR, Section 8a2.1.4, “SHINE Facility Loads Supported by SDG,” references Table 8a2.1-2, “Standby Diesel Generator Load List,” dated May 31, 2013, ADAMS Accession No. ML13172A270, page 8a2-6.

37 U.S. Nuclear Regulatory Commission Regulatory Guide 1.69, Revision 1, “Concrete Radiation Shields and Generic Shield Testing for Nuclear Power Plants,” dated May 2009, ADAMS Accession No. ML090820425.

38. U.S. Department of Transportation, Federal Aviation Administration, “Flight Standards Information Management System (FSIMS),” Order 8900.1, September 13, 2007.

39. U.S. Nuclear Regulatory Commission, “Memorandum and Order, In the Matter of Private Fuel Storage L.L.C.,” CLI-05-19, dated September 9, 2005, ADAMS Accession No. ML052520232.

40. U.S. Department of Energy, “Accident Analysis for Aircraft Crash into Hazardous Facilities,” DOE-STD-3014-96, October 1996, Reaffirmed May 2006.

41. International Atomic Energy Agency, “Consideration of External Events in the Design of Nuclear Facilities other than Nuclear Power Plants, with Emphasis on Earthquakes,” IAEA-TECDOC-1347, March 2003.

42. U.S. Nuclear Regulatory Commission, Regulatory Guide 1.78, Revision 1, “Evaluating the Habitability of a Nuclear Power Plant Control Room During a Postulated Hazardous Chemical Release,” December 2001, ADAMS Accession No. ML013100014.

43. National Oceanic and Atmospheric Administration, ALOHA® (Areal Locations of Hazardous Atmospheres), Version 5.4.4, Technical Documentation, Technical Memorandum NOS OR&R 43, November 2013.

44. U.S. Nuclear Regulatory Commission, “Safety Evaluation Report for the American Centrifuge Plant in Piketon, Ohio,” Docket No. 70-7004, NUREG-1851, September 2006.

45. SHINE Medical Technologies v. 0 - Chapter 02 - Figures 2.4-001 through 2.4-011, SHINE PSAR Figure 2.4-4, “Simplified Groundwater Table Contours Based on Measured Groundwater Elevations in Monitoring Wells,” dated May 31, 2013, ADAMS Accession No. ML13172A288.

46. “Bedrock Geologic Map of Wisconsin,” prepared by Mudrey et al., published in 1982, is available for download from the Wisconsin Geological and Natural History Survey’s website (http://wgnhs.uwex.edu/pubs/download_m078paper/).

47. SHINE Medical Technologies v. 0 - Chapter 08 - Figure 8a2.2-001, SHINE PSAR, Section 8a2.2.1, “Class 1E UPSS,” references SHINE PSAR Figure 8a2.2-1, “One-Line Diagram – Uninterruptible Electrical Power Supply System,” dated May 31, 2013, ADAMS Accession No. ML13172A298.

48. U.S. Nuclear Regulatory Commission, Regulatory Guide 1.180, “Guidelines for Evaluating Electromagnetic and Radio-Frequency Interference in Safety Related

Instrumentation and Control Systems", Revision 1, October 2003, ADAMS Accession No. ML032740277.

49. National Fire Protection Association (NFPA) 70-2008, "National Electric Code"

50. IEEE Std. 384-2008, "IEEE Standard Criteria for Independence of Class 1E Equipment and Circuits."

51. IEEE Std. 1202, "IEEE Standard for Flame-Propagation Testing of Wire and Cable"

52. NUREG-0849, "Standard Review Plan for the Review and Evaluation of Emergency Plans for Research and Test Reactors," issued October 1983, ADAMS Accession No. ML062190191.

53. U.S. Nuclear Regulatory Commission, Regulatory Guide 2.6, "Emergency Planning for Research and Test Reactors," revised March 1983, ADAMS Accession No. ML003740234.

54. ANSI/ANS-15.16-2008, "Emergency Planning for Research Reactors," revised September 23, 2008.

55. ANSI/ANS 15.1-2007, "The Development of Technical Specifications for Research Reactors," Reaffirmed April 24, 2013.

56. U.S. Nuclear Regulatory Commission, Regulatory Guide 5.59, "Standard Format and Content for a Licensee Physical Security Plan for the Protection of Special Nuclear Material of Moderate or Low Strategic Significance," Revision 1, February 1983, ADAMS Accession No. ML003739253.

57. ANSI/ANS-15.8-1995, "Quality Assurance Program Requirements for Research Reactors."

58. U.S. Nuclear Regulatory Commission, Regulatory Guide 2.50, "Quality Assurance Program Requirements for Research and Test Reactors", Revision 1, June 2010, ML101650030.

59. U.S. Nuclear Regulatory Commission, NUREG-2183, "DRFC Environmental Impact Statement for the Construction Permit for the SHINE Medical Radioisotope Production Facility Draft Report for Comment," dated May 31, 2015, ADAMS Accession No. ML15127A241.

60. U.S. Nuclear Regulatory Commission, NUREG-1520, Revision 1, "Standard Review Plan for the Review of a License Application for a Fuel Cycle Facility," May 2010, ADAMS Accession No. ML101390110.

61. SHINE Medical Technologies v. 0 - Chapter 13 – "Accident Analysis," dated December 3, 2014, ADAMS Accession No. ML14356A465.

62. ANSI/ANS-8.1-1998 (Reaffirmed in 2007), “Nuclear Criticality Safety in Operations with Fissionable Materials Outside Reactors,” American Nuclear Society, La Grange Park, Illinois, U.S.A.

63. ANSI/ANS-8.3-1997 (Reaffirmed in 2003), “Criticality Accident Alarm System” American Nuclear Society, La Grange Park, Illinois, U.S.A.

64. ANSI/ANS-8.7-1998 (Reaffirmed in 2007), “Nuclear Criticality Safety in the Storage of Fissile Materials,” American Nuclear Society, La Grange Park, Illinois, U.S.A.

65. ANSI/ANS-8.10-1983 (Reaffirmed in 2005), “Criteria for Nuclear Criticality Safety Controls in Operations With Shielding and Confinement,” American Nuclear Society, La Grange Park, Illinois, U.S.A.

66. ANSI/ANS-8.20-1991 (Reaffirmed in 2005), “Nuclear Criticality Safety Training,” American Nuclear Society, La Grange Park, Illinois, U.S.A.

67. ANSI/ANS-8.21-1995 (Reaffirmed in 2001), “Use of Fixed Neutron Absorbers in Nuclear Facilities Outside Reactors,” American Nuclear Society, La Grange Park, Illinois, U.S.A.

68. ANSI/ANS-8.23-2007, “Nuclear Criticality Accident Emergency Planning and Response,” American Nuclear Society, La Grange Park, Illinois, U.S.A.

69. ANSI/ANS-8.24-2007 (Reaffirmed in 2012), “Validation of Neutron Transport Methods for Nuclear Criticality Safety Calculations,” American Nuclear Society, La Grange Park, Illinois, U.S.A.

70. ANSI/ANS-8.26-2007, “Criticality Safety Engineer Training and Qualification Program,” American Nuclear Society, La Grange Park, Illinois, U.S.A.

71. IEEE Std 379-2000, “IEEE Standard Application of the Single-Failure Criterion to Nuclear Power Generating Station Safety Systems,” Institute of Electrical and Electronics Engineers, Piscataway, NJ, 2000.

72. U.S. Nuclear Regulatory Commission, Regulatory Guide 1.53, “Application of the Single-Failure Criterion to Safety Systems,” November 2003, ADAMS Accession No. ML033220006.

73. ASME N511, “Standard for In-Service Testing of Nuclear Air Treatment, Heating, Ventilating, and Air Conditioning Systems”

74. ASME AG-1-2009, “Code on Nuclear Air and Gas Treatment”

75. U.S. Nuclear Regulatory Commission, Regulatory Guide 3.71, Revision 2, “Nuclear Criticality Safety Standards for Fuels and Material Facilities,” December 2010, ADAMS Accession No. ML103210345.

76. ANSI/ANS-8.19-2005, “Administrative Practices for Nuclear Criticality Safety,” American Nuclear Society, La Grange Park, Illinois, U.S.A.

77. U.S. Nuclear Regulatory Commission, NUREG/CR-6698, “Guide for Validation of Nuclear Criticality Safety Calculational Methodology,” January 2001 ADAMS Accession No. ML050250061.

78. U.S. Nuclear Regulatory Commission, “Control of Heavy Loads at Nuclear Power Plants,” NUREG-0612, July 1980, ADAMS Accession No. ML070250180.

80. U.S. Nuclear Regulatory Commission, Regulatory Guide 8.2, “Guide for Administrative Practices in Radiation Monitoring,” Rev 1., May 2001, ADAMS Accession No. ML110460093.

81. U.S. Nuclear Regulatory Commission, Regulatory Guide 8.7, “Instructions for Recording and Reporting Occupational Radiation Exposure Data,” Rev. 2, November 2005, ADAMS Accession No. ML052970092.

82. U.S. Nuclear Regulatory Commission, Regulatory Guide 8.9, “Acceptable Concepts, Models, Equations, and Assumptions for a Bioassay Program,” July 1993, ADAMS Accession No. ML003739554.

83. U.S. Nuclear Regulatory Commission, Regulatory Guide 8.24, “Health Physics Surveys During Enriched Uranium-235 Processing and Fuel Fabrication,” Rev. 2, June 2012, ADAMS Accession No. ML110400305.

84. U.S. Nuclear Regulatory Commission, Regulatory Guide 8.34, “Monitoring Criteria and Methods To Calculate Occupational Radiation Doses,” July 1992, ADAMS Accession No. ML090770221.

85. U.S. Nuclear Regulatory Commission, Regulatory Guide 4.20, “Constraint on Releases of Airborne Radioactive Materials to the Environment for Licensees other than Power Reactors,” Rev. 1, April 2012, ADAMS Accession No. ML110120299.

86. U.S. Nuclear Regulatory Commission, Regulatory Guide 1.109, “Calculation of Annual Doses to Man from Routine Releases of Reactor Effluents for the Purpose of Evaluating Compliance with 10 CFR Part 50, Appendix I,” Rev. 1, October 1977, ADAMS Accession No. ML003740384.

87. U.S. Nuclear Regulatory Commission, Regulatory Guide 8.8, “Information Relevant to Maintaining Occupational Radiation Exposure as Low as Practicable (Nuclear Reactors),” July 1973, ADAMS Accession No. ML13350A229.

88. U.S. Nuclear Regulatory Commission, Regulatory Guide 8.10, “Operating Philosophy for Maintaining Occupational Radiation Exposures As Low As Practicable,” April 1974, ADAMS Accession No. ML13350A207.

89. Regulatory Issue Summary 2005-31, “Control of Security-Related Sensitive Unclassified Non-Safeguards Information Handled by Individuals, Firms, and Entities Subject to NRC Regulation of the Use of Source, Byproduct, and Special Nuclear Material,” December 2005, ADAMS Accession No. ML053480073.

90. NUREG-1301, “Offsite Dose Calculation Manual Guidance: Standard Radiological Effluent Controls for Pressurized Water Reactors,” April 1991, ADAMS Accession No. ML091050061.

91. U.S. Nuclear Regulatory Commission, Regulatory Guide 4.1, “Radiological Environmental Monitoring For Nuclear Power Plants,” Rev. 2, June 2009, ADAMS Accession No. ML091310141.

92. U.S. Nuclear Regulatory Commission, Regulatory Guide 4.15, “Quality Assurance for Radiological Monitoring Programs (Inception Through Normal Operations to License Termination)—Effluent Streams and the Environment,” Rev. 2, July 2007, ADAMS Accession No. ML071790506.

93. U.S. Nuclear Regulatory Commission, Regulatory Guide 1.143, “Design Guidance for Radioactive Waste Management Systems, Structures, and Components Installed in Light-Water-Cooled Nuclear Power Plants,” Rev. 2, November 2001, ADAMS Accession No. ML013100305.

94. NUREG/BR-0204, Rev. 2, “Instructions for Completing NRC’s Uniform Low-Level Radioactive Waste Manifest,” July 1998, ADAMS Accession No. ML071870172.

95. U.S. Nuclear Regulatory Commission, Information Notice No. 90-09, “Extended Interim Storage of Low Level Radioactive Waste by Fuel Cycle and Materials Licensees,” February 5, 1990.

96. U.S. Nuclear Regulatory Commission, Regulatory Issue Summary 2008-12, “Considerations for Extended Interim Storage of Low-Level Radioactive Waste by Fuel Cycle and Materials Licensees,” May 9, 2008, ADAMS Accession No. ML073330725.

97. U.S. Nuclear Regulatory Commission, Regulatory Issue Summary 2011-09, “Available Resources Associated with Extended Storage of Low-Level Radioactive Waste,” August 16, 2011, ADAMS Accession No. ML111520042.

98. U.S. Nuclear Regulatory Commission, Regulatory Guide 8.15, “Acceptable Programs For Respiratory Protection,” October 1976, ADAMS Accession No ML003739512.

99. Letter SMT-2015-039 from SHINE Medical Technologies, Inc., “SHINE Medical Technologies, Inc. Application for Construction Permit Preliminary Safety Analysis Report Revisions,” dated August 27, 2015, ADAMS Accession No. ML15258A348.

100. Letter SMT-2015-046 from SHINE Medical Technologies, Inc., “Updated General Information for SHINE Medical Technologies, Inc.,” dated September 16, 2015, ADAMS Accession No. ML15259A272.

101. Letter SMT-2015-040 from SHINE Medical Technologies, Inc., “SHINE Medical Technologies, Inc. Application for Construction Permit Response to Request for Additional Information,” dated September 2, 2015, ADAMS Accession No. ML15247A067.

102. Letter from SHINE Medical Technologies, Inc., “SHINE Medical Technologies. Inc. Application for Construction Permit, SHINE Strategy for Extended Plant Shutdowns,” dated September 28, 2015, ADAMS Accession No. ML15271A314.

103. Letter from SHINE Medical Technologies, Inc., “SHINE Medical Technologies, Inc. Application for Construction Permit, SHINE-Definition of ‘Safety-Related Activities,’” dated September 28, 2015, ADAMS Accession No. ML15271A290.

104. Letter from SHINE Medical Technologies, Inc., “Updated Construction Permit Completion Dates for SHINE Medical Technologies, Inc.,” dated September 29, 2015, ADAMS Accession No. ML15272A395.

105. NUREG-2115, “Central and Eastern United States Seismic Source Characterization for Nuclear Facilities,” January 2012, ADAMS Accession No. ML12048A804.

106. American Concrete Institute Committee 349-06, “Code Requirements for Nuclear Safety-Related Concrete Structures,” American Concrete Institute, 2007.

APPENDIX C. PRINCIPAL CONTRIBUTORS

Name	Chapter	Area of Expertise
Adams, Mary	4, 9	Project Management
Alexander, Stephen	7, 8	Instrumentation and Controls
Atchison, John	5, 6, 9	Mechanical Engineering,
Back, David	2	Seismic
Barss, Daniel	12	Emergency Preparedness
Bland, J. Stuart	7, 11	Radiation Protection
Boyle, Thomas	4, 13	Neutronics
Chapman, Gregory	6, 11	Radiation Protection, Criticality Safety
Cintron-Rivera, Jorge	8	Electrical Engineering
Downs, James	9	Fire Protection
Essig, Thomas	11	Radiation Protection
Gitnick, Mary T.		Project Management
Gorden, Milton	2	Seismic
Guardiola, Maria	13	Chemical Safety
Hammelman, James	13	Chemical Safety
Harwell, Shawn	15	Financial Qualifications
Heysel, Christopher	6	Civil/Structural Engineering
Hofer, Gregory	3, 9, 14	Mechanical Engineering
Huckabay, Victoria	12	Quality Assurance
Lynch, Steven	1, 14	Project Management
Marschke, Stephen	2	Environmental Engineering
McIlvaine, James	11	Radiation Protection
Mlynarczyk, Diane	12	Quality Assurance
Morrissey, Kevin	6, 13	Accident Analysis
Munson, Jeremy	6	Criticality Safety
Prescott, Paul	12	Quality Assurance
Rodriguez, Michael	12	Emergency Preparedness
Salay, Michael	4, 13	Accident Analysis
Skarda, J. Raymond	4, 13	Thermal Fluids, Neutronics
Sherbini, Sami	13	Dose Analysis
Smith, Jim	4, 9, 13	Radiation Protection
Soto-Lugo, Soly	12	Quality Assurance
Staudenmeier, Joseph	4, 13	Thermal Fluids, Neutronics
Tripp, Christopher	6	Criticality Safety
Tuttle, Glenn	12	Material Control and Accounting
Vollert, Frank	3	Civil Engineering
Weitzberg, Abe	5, 7	Thermal Hydraulics, Neutronics
Zaki, Tarek	4, 13	Project Management

APPENDIX D. REPORT BY THE ADVISORY COMMITTEE ON REACTOR SAFEGUARDS

UNITED STATES
NUCLEAR REGULATORY COMMISSION
ADVISORY COMMITTEE ON REACTOR SAFEGUARDS
WASHINGTON, DC 20555 - 0001

October 15, 2015

The Honorable Stephen G. Burns
Chairman
U.S. Nuclear Regulatory Commission
Washington, DC 20555-0001

SUBJECT: REPORT ON THE SAFETY ASPECTS OF THE CONSTRUCTION PERMIT APPLICATION FOR SHINE MEDICAL TECHNOLOGIES, INC. MEDICAL ISOTOPE PRODUCTION FACILITY

Dear Chairman Burns:

During the 628th meeting of the Advisory Committee on Reactor Safeguards (ACRS), October 7-10, 2015, we completed our review of the construction permit application for the SHINE Medical Technologies, Inc. (SHINE) medical isotope production facility. We reviewed the Preliminary Safety Analysis Report (PSAR) submitted by SHINE and the draft final Safety Evaluation Report (SER) prepared by the NRC staff. Our Subcommittee on Radiation Protection and Nuclear Materials reviewed this matter during meetings on June 23-24, August 19, and September 22, 2015. During these reviews, we had the benefit of discussions with representatives of the NRC staff and SHINE. We also had the benefit of the documents referenced. This report fulfills the requirement of Section 182b of the Atomic Energy Act of 1954, as amended that ACRS shall review each application under Section 103 or Section 104b for a construction permit or an operating license for a facility.

RECOMMENDATION

The Construction Permit for the SHINE medical isotope production facility should be approved.

BACKGROUND

For the past two decades, the U.S. has relied on imported medical radioisotopes to perform approximately 50,000 medical procedures daily. The Energy Policy Act of 2005 called for a study of ways to ensure a reliable supply of medical isotopes and, furthermore, to do so without the use of highly enriched uranium (HEU). Global shortages of medical isotopes during 2009 and 2010 have underscored the need for prompt action to ensure a reliable domestic supply. The National Academy of Sciences' 2009 publication "Medical Isotope Production without Highly Enriched Uranium" encouraged the creation of a domestic supply of molybdenum-99 (^{99}Mo) that does not rely on use of HEU. Following this report, the National Nuclear Security Administration pledged financial support to accelerate the development of technology necessary to establish a domestic commercial supply of ^{99}Mo using processes that do not utilize HEU. SHINE was created in 2010 to pursue the production of medical isotopes from low-enriched uranium (LEU) based technology and address the weakness of the existing supply chain.

In 2011, SHINE notified the NRC of its intent to submit applications to construct and operate a unique medical isotope production facility. SHINE's facility would include an irradiation facility and a radioisotope production facility housed in a single building, and is proposed to be built in Janesville, Wisconsin. Wisconsin is an Agreement State.

The NRC staff recognized that the proposed irradiation units would not be nuclear reactors as defined in 10 CFR 50.2. These units do not meet the regulatory definition of a nuclear reactor, because they are not designed or used to produce nuclear fission in a self-sustained chain reaction (i.e., $k_{eff} \geq 1.0$). Therefore, the 10 CFR Part 50 regulations governing licensing of production and utilization facilities did not apply to SHINE's irradiation facility or irradiation units. The NRC staff issued a direct final rule amending the definition of utilization facility in 10 CFR 50.2 to include SHINE's proposed irradiation units. This rule was of particular applicability to SHINE and would not affect any other NRC licensees or applicants. The direct final rule and the companion proposed rule were codified on December 31, 2014. The NRC staff also published interim staff guidance (ISG) to augment NUREG-1537, "Guidelines for Preparing and Reviewing Applications for the Licensing of Non-Power Reactors," since the NUREG did not specifically address facilities, such as SHINE, which use homogeneous fuels.

On March 26, 2013, and May 31, 2013, SHINE submitted the required parts of a construction permit application. SHINE's application describes its proposed medical isotope production facility and provides a PSAR. The SHINE irradiation facility consists of eight irradiation units. Each irradiation unit uses an accelerator-driven neutron source to induce fission in LEU in a subcritical operating assembly. This is used for the irradiation of an aqueous uranyl sulfate target solution, resulting in the production of ^{99}Mo and other fission products. The accelerator creates deuterium-tritium fusion reactions resulting in the formation of high-energy neutrons. The flux of neutrons into the target solution vessel is intensified in a neutron multiplier. The aqueous LEU solution undergoes subcritical fission of ^{235}U present in solution. Operation of the accelerator is needed to maintain the fission process. After irradiation, radioisotopes of interest are extracted by a chemical separation process in the radioisotope production facility of conventional design.

DISCUSSION

In accordance with the required licensing process for a construction permit, the applicant must provide a PSAR. As stated in the ISG for non-power reactor licensing, the PSAR is less detailed than that required for an operating license application. Of course, "less detailed" is not fully defined, but the application demonstrates knowledge of the requirements for the safety analysis and the kinds of accidents that ought to be of concern. We have identified many places where, while reasonable for the purposes of a construction permit, the analyses and assumptions are not supported well enough for an operating license. We document some of these in later paragraphs.

Process system chemical and radiological materials are not present during construction. Therefore, when we examine the application from a safety point of view, we must ask what activities during construction could affect chemical and radiological risk later, when the facility is

operating. That is, we seek issues that could create safety concerns in an operating facility, after the building is literally set in concrete. It could be difficult or impractical to correct these issues related to the configuration of the structure, once the buildings are in place. There have been instances in chemical processing plants (e.g., nuclear reprocessing facilities), where the completed facilities could not be operated after construction was complete, because of safety and operational problems that could not be resolved. In our review, we identified two such possibilities for SHINE—layup capability and analysis of aircraft crashes. Both have been addressed, such that we can recommend issuing the construction permit.

Nuclear chemical processing facilities need to have built-in capability to support layup following unexpected process interruptions. It must be possible to stop the process, safely remove materials within the system, clean the system, and place it in a safe condition for an extended period in a way that does not challenge the facility piping systems and chemical reactors. Using temporary, *ad hoc* processes to resolve process system failures may not be possible, could subject the operators and maintenance staff to unnecessary risks, and introduces possibilities for error. There are financial and worker risk issues. Under some circumstances, there may also be a public risk issue. Because of the significance of ^{99}Mo to medical procedures and the diminishing capacity at other sources, loss of the SHINE facility would also present an indirect health risk to the public.

There was no evidence in the applicant's PSAR or the draft SER that layup capability had been considered in the design. SHINE has submitted a letter indicating that they have twice the necessary capacity within the facility to store all target solution batches and that they will develop procedures to facilitate this process before operations. The staff has reviewed this submittal, found it sufficient, and is including the commitment for developing these procedures in its SER. The submittal does not demonstrate that an evaluation of possible system failures has been performed to ensure installed systems can address relevant failure modes. We expect that such analyses will be included in the integrated safety assessment.

For aircraft crashes, the protection of the facility depends on the as-built structure. All areas of the plant that contain safety-related systems and equipment are protected against damage from the identified design-basis aircraft impacts.

The SHINE facility handles fissile material, fission products, and hazardous process chemicals. The potential for their release is the focus of the accident analyses. SHINE employs confinement rather than a leak-tight containment structure. Confinement is achieved via a robust structure combined with engineered and tested cascading ventilation and filtration systems, and automatic isolation dampers actuated on high radiation levels. The design, construction, maintenance, and operation of the facility assure that the confinement protects workers and the public, and are key to the very low radiological consequences calculated in the PSAR. The facility meets 10 CFR 20 requirements.

The staff identified a number of issues where further technical and design information must be supplied in the Final Safety Analysis Report (FSAR) and where the applicant identifies necessary research and development. These issues are documented in Appendix A to the SER. In some cases the staff has proposed construction permit conditions, which must be resolved before construction is completed. They also identified regulatory commitments that must be addressed in the FSAR.

We reviewed important safety aspects of the SHINE application, including the site characteristics; the design of structures, systems, and components; radiation protection and waste management; conduct of operations and technical specifications; and accident analysis. We found the state of the PSAR adequate for the construction permit. Looking ahead to SHINE's future application for an operating license, we had questions related to criticality control and margin, adequacy of confinement, systems that provide support to safety-related systems, partial losses of electrical power, hydrogen generation and control, underwater maintenance issues, and possible "red oil" and acetohydroxamic acid reactions[1]. When the FSAR is submitted, assumptions should be justified and margins or uncertainties should be identified and quantified or bounded.

The staff demonstrated an ability to develop a practical licensing approach for a unique facility. We look forward to reviewing the application for an operating license.

Sincerely,

/RA/

John W. Stetkar
Chairman

REFERENCES

1. SHINE Medical Technologies, Inc. letter to NRC, dated May 31, 2013, Part Two of the SHINE Medical Technologies, Inc. Application for Construction Permit (ML13172A324)
2. Final Draft SER (Package Accession No. ML15267A796)
3. SHINE PSAR, Rev 2, Chapters 1, 2, 3, 4, 5, 6, 7, 8, 9, 11, 12, 13, and 14 (Package Accession Nos. ML15175A094 and ML15175A274)
4. SHINE RAI response dated: October 15, 2014 (ML14296A203); December 3, 2014 (ML14357A380, ML14357A381 and ML14357A382); February 6, 2015 (ML15043A443 and ML15043A397); March 23, 2015 (ML15092A371); April 10, 2015 (ML15120A254); May 1, 2015 (ML15131A483); May 14, 2015 (ML15147A284); May 20, 2015 (ML15140A734); September 2, 2015 (ML15247A067); September 15, 2015 (ML15259A024)
5. SHINE Emergency Plan (ML13269A379)
6. SHINE letter dated September 28, 2015, "SHINE-Definition of "Safety-Related Activities"" (ML15271A290)

[1] "Red oil" is an unstable compound of uncertain composition formed by interaction of organic liquids and nitric acid solutions in the solvent extraction processes. Red oil has been observed to decompose explosively in industrial-scale facilities. The exact reaction is unknown, but the conditions existing prior to these events have been documented. Acetohydroxamic acid is the common name for N-hydroxyacetamide [CAS Number 546-88-3]. It is used in the UREX process much as hydroxylamine is used in the PUREX process. Hydroxylamine has been implicated in several energetic industrial accidents. There is less operational experience with N-hydroxyacetamide.

7. SHINE letter dated September 28, 2015, "SHINE Strategy for Extended Plant Shutdowns" (ML15271A314)
8. U.S. Defense Nuclear Facilities Safety Board, Robinson et al, "Control of Red Oil Explosions in Defense Nuclear Facilities," DNFSB/TECH-33, November 2003
9. Whipple, C., S.M. Larson, C. Atkins-Duffin, A.E. Boardman,T.J. Ruth, J. Vujic, R.G. Wymer, "Medical Isotope Production Without Highly Enriched Uranium", Committee on Medical Isotope Production Without Highly Enriched Uranium, National Research Council, National Academy Press, Washington, 2009
10. Final Interim Staff Guidance Augmenting NUREG-1537, Part 1, 'Guidelines for Preparing and Reviewing Applications for the Licensing of Non-Power Reactors: Format and Content,' for Licensing Radioisotope Production Facilities and Aqueous Homogeneous Reactors, dated October 17, 2012
11. Final Interim Staff Guidance Augmenting NUREG-1537, Part 2, 'Guidelines for Preparing and Reviewing Applications for the Licensing of Non-Power Reactors: Standard Review Plan and Acceptance Criteria,' for Licensing Radioisotope Production Facilities and Aqueous Homogeneous Reactors, dated October 17, 2012
12. Stephen Marschke, "Aircraft Crash Cutoff Probabilities for the SHINE Medical Facility," Information Systems Laboratories, Inc., S. Cohen & Associates, Inc., prepared for the U.S. Nuclear Regulatory Commission, dated September 2015

NRC FORM 335
(12-2010)
NRCMD 3.7

U.S. NUCLEAR REGULATORY COMMISSION

BIBLIOGRAPHIC DATA SHEET

(See instructions on the reverse)

1 REPORT NUMBER
(Assigned by NRC, Add Vol., Supp., Rev., and Addendum Numbers, if any.)
NUREG-2189

2 TITLE AND SUBTITLE
Safety Evaluation Report Related to SHINE Medical Technologies, Inc. Construction Permit Application for a Medical Radioisotope Production Facility

3 DATE REPORT PUBLISHED
MONTH: August
YEAR: 2016

4 FIN OR GRANT NUMBER

5 AUTHOR(S)
See Appendix C of the Report

6 TYPE OF REPORT
Technical

7 PERIOD COVERED (Inclusive Dates)

8 PERFORMING ORGANIZATION - NAME AND ADDRESS (If NRC, provide Division, Office or Region, U.S. Nuclear Regulatory Commission, and mailing address; if contractor, provide name and mailing address.)
Division of Policy and Rulemaking
Office of Nuclear Reactor Regulation
U.S. Nuclear Regulatory Commission
Washington, DC 20555-0001

9 SPONSORING ORGANIZATION - NAME AND ADDRESS (If NRC, type "Same as above"; if contractor, provide NRC Division, Office or Region, U.S. Nuclear Regulatory Commission, and mailing address.)
Same as 8 above

10 SUPPLEMENTARY NOTES

11 ABSTRACT (200 words or less)
This safety evaluation report (SER) documents the U.S. Nuclear Regulatory Commission (NRC) staff's technical review of the construction permit application submitted by SHINE Medical Technologies, Inc. (SHINE) for a medical radioisotope production facility to be located in Janesville, Wisconsin. The proposed facility would comprise an irradiation facility (IF) and radioisotope production facility (RPF) for the irradiation and processing of special nuclear material to produce medical radioisotopes, such as molybdenum-99. The IF would consist of eight subcritical operating assemblies (or irradiation units), which would each be licensed as utilization facilities as defined in Title 10 of the Code of Federal Regulations (10 CFR) 50.2, "Definitions." The RPF would consist of three hot cell structures, licensed collectively as a production facility, as defined in 10 CFR 50.2.

Based upon the review documented in the SER, the staff finds that the preliminary design and analysis of the SHINE IF and RPF (1) provides reasonable assurance that the final design will conform to the design basis, (2) includes an adequate margin of safety, (3) SSCs adequately provide for the prevention of accidents and the mitigation of consequences of accidents, and (4) meets applicable regulatory requirements as well as NRC guidance.

12 KEY WORDS/DESCRIPTORS (List words or phrases that will assist researchers in locating the report.)
SHINE Medical Technologies, Inc., SHINE, construction permit, safety evaluation report, medical radioisotope production facility, irradiation facility, utilization facility, radioisotope production facility, production facility

13 AVAILABILITY STATEMENT
unlimited

14 SECURITY CLASSIFICATION
(This Page)
unclassified
(This Report)
unclassified

15 NUMBER OF PAGES

16 PRICE

Printed
on recycled
paper

Federal Recycling Program

UNITED STATES
NUCLEAR REGULATORY COMMISSION
WASHINGTON, DC 20555-0001

OFFICIAL BUSINESS

@NRCgov