Official Transcript of Proceedings

NUCLEAR REGULATORY COMMISSION

Title: Advisory Committee on Reactor Safeguards
Subcommittee on Plant Operations and Fire Protection Meeting with Region II

Docket Number: N/A

Location: Atlanta, Georgia

Date: July 28, 2016

Work Order No.: NRC-2506 Pages 1-235

NEAL R. GROSS AND CO., INC.
Court Reporters and Transcribers
1323 Rhode Island Avenue, N.W.
Washington, D.C. 20005
(202) 234-4433

UNITED STATES OF AMERICA

NUCLEAR REGULATORY COMMISSION

+ + + + +

----------x

ADVISORY COMMITTEE ON :

REACTOR SAFEGUARDS :

SUBCOMMITTEE ON PLANT OPERATIONS :

AND FIRE PROTECTION MEETING :

WITH REGION II :

----------x

Thursday, July 28, 2016

U.S. NRC Region II Office

8th Floor, Salon A

245 Peachtree Center Ave NE

Atlanta, Georgia

The above-entitled meeting was conducted at 8:30 a.m.

SUBCOMMITTEE MEMBERS:

GORDON R. SKILLMAN, Chair

RONALD G. BALLINGER

DENNIS C. BLEY

MARGARET SZE-TAI Y. CHU

WALTER L. KIRCHNER

JOSE A. MARCH-LEUBA

HAROLD B. RAY

MATTHEW W. SUNSERI

NRC STAFF:

DEREK WIDMAYER, Designated Federal Official

CATHY HANEY, Regional Administrator

MIKE CAIN, DFFI, SRI, Brunswick

BRENDAN COLLINS, DRS

ROBERT MATHIS, DCI

PHIL McKENNA, DRS, SRI, Surry

JEREMY MUNSON, DFFI

ANTHONY PONKO, DCI

SCOTT SHAEFFER, DRS

JIMI YEROKUN, Director, DCI

C-O-N-T-E-N-T-S

ITEM PAGE

Introduction.....4

Welcome and Regional Overview.....7

Division of Construction Inspection

Code Translation: Design to Construction.....8

Plant Specific Issues:

Surry - FLEX Modification Leads to Low Head Safety Injection Missile Protection Vulnerability.....48

Brunswick - EDG Relay Commercial Grade Dedication.....58

Division of Reactor Safety

Weld Overlay/Stress Corrosion Crack Issue.....70

Cyber Findings.....89

Division of Fuel Facility Inspection

Natural Phenomena Hazards (NPH),.....115

Temporary Instruction (TI) audits currently being performed to assess (fuel facility) licensees' compliance with

their respective licensing basis for NPH events

Subcommittee Discussion/Closing Remarks.....123

P R O C E E D I N G S

MR. SKILLMAN: The meeting will now come to order. This is a meeting of the Advisory Committee on Reactor Safeguards and Plant Operations and Fire Protection.

My name is Dick Skillman, and I'm chairman of this subcommittee. ACRS members that are in attendance today are Ron Ballinger, Matt Sunseri; Dennis Bley, to my left, who is the ACRS chairman; Margaret Chu, Jose March-Leuba, Harold Ray, ands Walt Kirchner.

Derek Widmayer, of the ACRS staff, is the designated federal official for this meeting.

The purpose of today's meeting is for the subcommittee to meet with representatives of Region II to discuss activities and issues of mutual interest. The subcommittee will gather information, analyze relevant issues and facts, and formulate proposed positions and actions as appropriate for consideration of the full ACRS.

The rules for participation in today's

meeting were announced as part of the notice of this meeting previously published in the *Federal Register*. The meeting will be open to the public attendance, except for portions of the meeting whereby security or personnel issues may be discussed. We have received no written comments or requests for time to make oral statements at this meeting.

A transcript of today's meeting is being kept and will be made available, as stated in the *Federal Register* notice. Therefore we request that meeting participants use the microphones located throughout the room here when addressing the subcommittee. Participants should first identify themselves and speak with sufficient clarity and volume so that they can be readily heard.

I ask at this time you please silence all cell phones and mobile devices. I would like to communicate that the meeting is being broadcast by webinar to the sites. Participants will be asked if they wish to participate at selected points during the meeting.

I would like to make a comment as we begin, and this comment comes from experience that we've had in very similar meetings. And the question is what is

the Advisory Committee on Reactor Safeguards? Who are we?

And I will answer that question as follows: The Advisory Committee on Reactor Safeguards is statutorily mandated by the Atomic Energy Act of 1954, as amended. The committee has four primary purposes: to review and report on safety studies and reactor facility licenses and the license renewal applications; to advise the Commission on the hazards of proposed and existing production and utilization facilities and the adequacy of proposed safety standards; to initiate reviews of specific generic matters or nuclear facility related items; and to provide advice in the areas of health physics and radiation protection.

The ACRS is independent of the NRC staff and reports directly to the Commission, which appoints its members. The operational practices of the ACRS are governed by the provisions of the Federal Advisory Committee Act, FACA. Advisory committees are structured to provide a forum where experts representing many technical perspectives can provide independent advice that is factored into the Commission's decision-making process.

Most committee meetings are open to the public, and any member of the public may request an opportunity to make an oral statement during the committee meeting. Those who wish to do so should contact the ACRS point of contact indicated on the public meeting schedule.

With that, I would welcome you all, and we will proceed with the meeting, and I will call on Cathy Haney, the administrator of Region II, to make introductory remarks.

Thank you.

MS. HANEY: Well, good morning. I just wanted to take a minute and welcome you to Region II, to our Atlanta office here. Out of this office we have responsibility for the operating nuclear power plants and the plants under construction at Vogtle and Summer in the Southeast.

Region II is somewhat unique from the other regions, in that we also have responsibility for all the fuel cycle licensees. Most of those are in the Southeast, but we do have some that go out to the West Coast, so a very broad aspect of the areas that we cover here.

You are going to be hearing from a lot of

our staff today. Thank you for showing interest in the topics; we're very excited to make these presentations to you, so I'm really going to turn quickly over to our technical staff.

But before we do that, I want to just take a safety moment, because this is -- some of you are not familiar with our Region II offices, and in case we have any members of the public here, in case we have to evacuate, if Kathleen will lead us out of the area, I will be the last one to exit and to clear the room.

Basically what we'll be doing is going across the hallway and then down the stairwell, and we do walk down the street to a garage. Hopefully that won't happen, but the last time I had an all-hands meeting, in the middle of the meeting there was a fire drill, so it was very good that we started out with that safety moment.

So with that, several of my senior leaders are here today and will be sitting through the meeting, so if there's anything they can do, please feel free to ask for any assistance. We're here to help you, and I hope you enjoy the meeting topic discussions that you'll have today.

So thank you very much.

MR. SKILLMAN: Cathy, thank you. And with that we begin our first agenda item: Division of Construction Inspection, and first up are Tony and Robert.

MR. PONKO: Good morning. My name's Tony Ponko; I'm a senior construction inspector in the Civil Structural Branch, Division of Construction Inspection, here in Region II.

I've been with the NRC a little over five years now. Prior to that I worked in private industry as a consulting structural engineer. Responsibilities now at the NRC are mainly leading and conducting inspections at the construction sites -- the new reactor construction sites at Vogtle and V.C. Summer.

I'll be giving the first half of this presentation, and Robert Mathis, who's a construction inspector in the Electrical Branch in the Division of Construction Inspection, will give the second part.

This presentation is on Translating Technical Requirements and Licensing Commitments into Construction at the AP1000 sites. It's intended to provide a regional perspective and a current vantage point on completion and implementation of the detailed design of the AP1000 construction sites.

Just a brief agenda: We'll do an overview of design implementation at the AP1000 construction sites, and I'll talk through some examples of inspection findings associated with translation of structural code requirements into final design output documents, and then Robert's going to come up, and he's going to talk about digital I&C implementation at the sites.

Overview: Vogtle Units 3 and 4 and V.C. Summer Units 2 and 3 are the first AP1000 plants under construction in the United States. The detailed engineering and construction documents are at various stages of completion, depending on the specific structure system or component.

They're also subject to the construction process. That construction process in and of itself will impact those final documents due to contractor-proposed changes, unanticipated conflicts, and final as-built configurations.

Both these plants are licensed under 10 CFR Part 52 and reference the AP1000 design certification document. Those design requirements are throughout the AP1000 DCD. Detailed design of the structures, systems, and components must comply with AP1000 DCD,

in particular the Tier 1 and Tier 2* information, which includes applicable codes and standards and inspections, tests, analysis, and acceptance criteria, the ITAAC, which is specifically associates with the design and structures of systems and components.

Mostly notably ITAAC is associated with piping design and digital I&C design. The Tier 1 and Tier 2* information is information that the licensee cannot depart from without prior NRC approval.

This slide just highlights the importance placed on design control. Obviously design control is one of the 18 quality assurance criteria in Appendix B to 10 CFR Part 50. And also design/engineering is one of the six cornerstones of safety identified in the construction reactor oversight process.

MR. RAY: Just before you go, let me ask a question. We're talking about construction inspection.

MR. PONKO: Yes, sir.

MR. RAY: Typically, when something is found that's problematic, the NRC will look back and cite against design control, for example, as the basis for a notice of violation.

Are you doing anything, though, to look at

the programmatic implementation, which usually isn't described as inspection? Is there somebody who's looking at the program being implemented, irrespective of inspection findings that may be good or bad?

MR. PONKO: Yes. There are inspections -- I think I have a slide that highlights this. There are inspections, routine ITAAC and programmatic inspections which are conducted at the reactor sites, and there's also engineering design verification inspections which are conducted at vendor facilities to ensure that the vendor is implementing the high-level design in the AP1000 DCD, in compliance with design requirements and regulations.

MR. RAY: Is some of that done by Vendor Inspection Branch, and other done by the region or what --

MR. PONKO: It's done in conjunction and collaboration between the Vendor Inspection Branch and Region II inspectors. Particularly when Robert comes up and talks about some of the digital I&C inspections, those inspections are looking at the entire design process of the digital I&C software.

So they're being led, I believe, that vendor inspectors, but Region II inspectors are accompanying

those vendor inspections at the facilities.

MR. RAY: The importance of this has gotten a little more focus recently in AP1000, as you probably are aware. But the main point of it all is are we just looking at inspection findings to determine whether things are being done as they are required to, or are we looking at the process to see if it's in compliance with the requirements?

MR. PONKO: We're looking at the design process, in particular the design process compliance with the quality assurance requirements. You know, it goes through -- the design goes through a rigorous process and is subject to design verification and the requirements of quality assurance requirements.

And this slide actually talks about the type of inspections that are being conducted to verify design implementation. Routine ITAAC and programmatic inspections conducted by regional and resident inspectors, in accordance with Inspection Manual Chapters 2503 and 2504.

These inspections typically look at final construction documents, some final engineering documents and will review design deviations, dispositions of nonconformance, and design change

documents to ensure that they're being done in accordance with the applicable requirements.

Then also as I mentioned, conducting engineering design verification and ITAAC inspections at vendor facilities in accordance with Inspection Manual Chapter 2507 and Inspection Manual Chapter 2503. Those inspections ensure that the high-level design information contained in the SSAR and the AP1000 DCD are translated into detailed engineering procurement and construction document consistent with NRC requirements and the requirements of the SSAR.

MR. SKILLMAN: Let me reinforce Harold's question. Have there been any CRs derived out of the Southern Company QA program on site that identified failure in any of the processes?

In other words, have they written themselves up for any process failures?

MR. PONKO: They have self-identified issues with design control on the sites. Yes, sir.

MR. SKILLMAN: And those have been entered into their Criterion 16 Program?

MR. PONKO: When they self-identify something, a particular problem with design control, yes, they enter it into their corrective action

program.

MR. SKILLMAN: And do they deep-dive into the root and dig that out and come to a conclusion?

MR. PONKO: Some of those issues have -- to my knowledge, depending on the classification of them, have required an apparent cause or root cause evaluation.

MR. SKILLMAN: Have there been many?

MR. PONKO: I don't have numbers.

MR. SKILLMAN: You got a feel? More than one, more than 10?

MR. PONKO: I would say, you know -- well, I couldn't really speak to it, sir, as far as the ones that they -- my gut feeling is it's probably an order of magnitude of 10 or so, but I really don't know.

MR. SKILLMAN: It's the same kind of question that we might ask on a 5059 process: How many have not been as thorough or as accurate as they should have been? And when a finding like that is discovered, is there really a CR, and is there really a followup to make sure there's not a programmatic issue? It's the programmatic issue that we're kind of picking on here.

MR. PONKO: Yeah. And I -- you know,

they're writing CRs every day about issues, and a lot of them are associated with design control. It's a question of how many of those CRs are significant enough that they would require a root cause analysis.

MR. SKILLMAN: Thank you.

MR. PONKO: That's really what I'm sure of. My feel for a number is really -- things of that significant magnitude that would require that review and examination.

MR. RAY: I know you're well aware of this, but of course Appendix B contains criteria applicable to construction other than just design control, and so I assume that all of that is looked at programmatically --

MR. PONKO: Yes, sir.

MR. RAY: -- inspection and so on, material procurement. Anyway, so it's not just design control, even if that's the most important one.

MR. PONKO: That's right. And the programmatic inspections are looking across the board at all 18 criteria. We have QA inspections; I believe they're still conducted semiannually at the sites. Those QA inspections will look at a sampling of all those criteria.

Resident inspectors on site are also looking at the quality assurance criteria routinely, so all 18 of those criteria are reviewed across the board at the AP1000 construction sites.

This just gives a current status of -- at the construction sites. There have been 14 NRC-identified violations associated with design control since implementation of the construction Reactor Oversight Process.

Those are more-than-minor violations. The total population is approximately -- for constructions findings, approximately 35. It's the largest grouping of violations of any one criterion.

Out of -- all the violations have been terms to be of very low safety significance, green. Both plants are currently in the License Response column of Construction Action Matrix, which means the baseline inspection program is being implemented; there's been no reactive inspections at the sites.

Going into some of the structural inspection examples, the first example deals with anchorage and spacing of headed shear reinforcement in structural components of nuclear island.

During routine review of construction

drawings it was determined that the anchorage and spacing of headed reinforcement used to resist out-of-plane shear forces in slabs and walls in the nuclear island did not meet the requirements of ACI 349-01, which is the applicable concrete code reference in the AP1000 DCD, as code requires that the shear reinforcement be adequately anchored, provide for ductility, and appropriately spaced to intersect any postulated shear crack.

The bars were not adequately developed. They were spaced too far apart to be fully effective. Again, this affected the basemat slab -- areas of the basemat slab and also walls of the nuclear island throughout the radiologically controlled non-rad area of the nuclear island.

The headed reinforcement would use little hooks to alleviate congestion and enhance constructability. And if you're not aware of what a headed bar is, it's essentially just a steel plate that's threaded onto an end of a bar to develop a reinforcing bar for the mechanical anchorage, as opposed to extension of the bar into the structural component or use a hook on the bar.

MR. RAY: I'm sorry. Could you repeat that

last explanation again, just a little bit further? I was listening, but I'm not sure I got it.

Was that the fix, to put the anchorage --

MR. PONKO: No. The bars were detailed as headed reinforcement bars, and the detailing of the headed reinforcement bars, in the concrete code there's specific requirements for developing those bars.

The bars that were detailed on the construction drawings did not meet those requirements.

MR. RAY: And do you happen to know why that occurred? What was the reason? Was the code just not understood by the designer? I'm asking a question you may not know the answer to, but if you do, I'd be interested.

MR. PONKO: I really don't know why they missed those requirements. I will say, though, that in the older codes, like ACI 349, those requirements are not necessary explicitly stated.

If you go to the issue resolution on this slide, because of that, one of the approaches to resolving the issue was in the design stage -- a lot of it was in the design stage; some of the reinforcement was installed already.

One of the proposals to resolve issue was to adopt alternate acceptance criteria that's provided in ACI 318-11; that's the commercial code. But 318's relation to 349 is that 318 is essentially a baseline document, whereas 349 is dates, and then where it was impossible to meet the ACI 318-11 requirements, they had to redesign some of the elements -- some of the structural elements that included increasing the thickness of some slabs and also they had to revise the spacing of the reinforcement.

DR. BLEY: Tony?

MR. PONKO: Yes, sir.

DR. BLEY: Could you give me a little -- very brief tutorial on the construction ROP. Why would this be not safety significant? You said all of the findings were not safety significant?

MR. PONKO: They were very low safety significance.

DR. BLEY: Because?

MR. PONKO: Because it was determined that even if it was built with the nonconforming reinforcement, the construction would have satisfied its design function.

DR. BLEY: Thank you.

MR. PONKO: And so the cROP has levels of findings and significance based upon the functionality of the component.

DR. BALLINGER: Is this the issue that required them to increase the strength of the concrete?

MR. PONKO: That was actually a previous issue having to do with reinforcement embedment at Vogtle. That did occur there, yes, sir, in the basemat. But I do not believe one of the approaches specifically to address this issue was to increase the strength of the concrete.

This resulted in a departure from a Tier 2* code or standard, AP1000 DCD, so it also required a license amendment, and that license amendment essentially adopted the alternate criteria provided in ACI 318-11.

Any other questions associated with this example?

DR. BALLINGER: This was picked up after the fact?

MR. PONKO: It was picked up on a regional inspection, where the inspectors were looking at the placement of the reinforcement in the basemat prior to

the placement of concrete, so reinforcements in the slab; the concrete had not been placed; reviewing final construction documents and seeing something that looked out of the ordinary and asking the question and going from there.

A second example has to do with weld allowable stress not in compliance with the licensing basis. This was identified at the Vogtle site, and it was identified during review of detailed engineering documents.

It was determined that the welds used to connect mechanical couplers to steel plates did not meet the requirements of AISC N690-94, which is the applicable code for steel construction referenced in the AP1000 DCD.

This primarily affected embedments used to transmit loads of concrete structures. This included those embedments that are used to anchor the CA20 module to the nuclear island basemat. The CA20 module houses the spent-fuel pool and gas-handling areas.

These are embedments fabricated with reinforcement anchors, mechanical couplers, and steel plates; essentially a piece of reinforcement which extends into a concrete element.

It has a threaded connection to a steel mechanical coupler, which is attached to a structural plate that they provide partial joint penetration and fillet weld. Design requirements of this system is they occur in the reinforcing bar and not the brittle welds.

In order to demonstrate that, any stress on the welds and the demand placed on them needs to be less than the allowable stress in the AISC code. It was determined that there was an error in the calculation such that the stress in these welds exceeded the AISC allowable stress.

MR. SKILLMAN: Had that design already been covered in the concrete floor so that it was not accessible for repair?

MR. PONKO: In some areas it had been covered in the concrete floor, the Unit 3 at Vogtle -- the Unit 3 in that place where the CA20 module had already been installed. It was in that construction that this was identified.

MR. SKILLMAN: So the same question here as Dr. Bley asked: Why is this not safety significant?

MR. PONKO: Well, it's safety significant, but it has low significance because it was, again,

demonstrated that the reinforcement would satisfy -- the design would have satisfied its design function as detailed.

And part of that rationale comes through the issue of resolution. They conducted destructive testing of welds to demonstrate that failure was in the coupler alone; it was not in the brittle weld, which is really the only design requirement in the system. So even though they were exceeding the allowable stresses provided in AICS N690, it really didn't interfere in the functionality of the system.

MR. SKILLMAN: Okay. Thank you.

Professor?

DR. BALLINGER: This would seem to go to a process issues as well. I mean, this kind of calculation would seem to be pretty simple, so someone did something somewhere. Does that have to do with the process?

MR. PONKO: I don't know if it has to do necessarily with a weakness in the design process itself. There was a mistake that was clearly made in the calculation. There was an incorrect assumption that was made.

That assumption went through the entire

process, and that calculation was released for construction. You know, clearly a rigorous process would hope to catch all those sort of mistakes, but I think a certain amount of them are going to to get through. There's going to be some errors and omissions in construction.

Again this impacted or was a departure from Tier 2* information, so it required a licensing amendment to adopt the alternate acceptance criteria.

MR. SKILLMAN: Tony, independent from the presentation, I'm not sure your microphone is picking up, and I want to make sure our reporter --

MR. PONKO: All right.

MR. SKILLMAN: Thank you, Tony. Please proceed. Thank you.

MR. PONKO: Sure. Are there any other questions about this example?

(No response.)

MR. PONKO: Actually, that concludes the structural examples. Now I've got my microphone fixed, so I'll get Robert up here to deal with the -- talk to the digital I&C.

MR. MATHIS: Good morning. My name is Robert Mathis. I've been with the NRC for about six

years, and before the NRC, I was involved in manufacturing, as a technical manager, and also automation integration, just for different industries and facilities.

So today I'm going to talk about digital I&C inspection examples as relates to translations of the code and standards into design for construction. And in this sense when we're talking about digital I&C construction, we're talking about the system and software development.

So for background, our inspections are performed under IP 65001.22, and that inspection procedure was issued in late 2011. One aspect of this inspection procedure is that it wanted to have a front-loaded approach to the inspection, which means that it was going to be a series of programmatic implementation and in-process testing observations. And by taking this approach, we can validate the licensee's development process.

And the samples that we focus on in our inspections include the system and software life cycle attributes, and I'll go into more detail what those are, as well as the design outputs.

And for digital I&C, digital instrumentation

and control, this is very important, because there's a reliance that the licensee has a rigorous process and that they have a strong independent verification and validation program.

Also the inspection's going to place emphasis on the process, the configuration management, IV&V, and the traceability throughout the development life cycle. In terms of --

MR. RAY: Excuse me. Let me ask a semantic question, because you're describing exactly the right approach, in my personal judgment, but it used to be that we called these audits, when you're talking about a program, rather than inspection. Is that just not an important distinction, or are there other things that are done that are called audits?

MR. MATHIS: From the regional perspective, we're performing only inspections, so those inspections will be either -- for the first example I give you will be against the licensee, so those are resulting in violations against the licensee.

And also when we do other inspections, we'll go out with the Vendor Branch, and those will be against the vendor in terms of if we have any findings of e-notices or nonconformances.

MR. RAY: No, I was just asking really a semantic question, not a what are you doing question, but we used to differentiate between inspections on the one hand and audits on the other hand. It looks to me like everything's now deemed to be an inspection even though what you described was more like an audit, because it's front-loaded; it's process-oriented.

MR. YEROKUN: I think I can take that question. I'm Jimi Yerokun; I'm director of Construction Inspection. To your question specifically, though, what we do is entirely inspections. You know, we inspect construction against license requirements. They have a license to do that.

So the other things you're talking about, you know, going out to the vendor, in the old days -- I'm not sure that's -- you don't do that against the discrete requirements, so everything we do is completely in this inspection domain. They have a license, they have codes and requirements they have to meet, and do inspections.

So there's absolutely no confusion of what we do, you know, akin to what you might call it in the previous case. So we have all inspections. I hope

that helps.

MR. RAY: Okay. Well, for the purpose of my colleagues anyway, I understand; we call them all inspections. But to the extent you're looking at, is the process working, in the old days, as you called it, I would have termed it an audit, but I think you're doing the same thing.

MR. YEROKUN: Again, when we do inspections, if the process is not -- some requirements have not been adhered to, there are potential issues with that. I think when you do audits it's more, you know, yeah, you look at it against the process and design, and if there are some discrepancies or issues in there, I'm not sure, you know, the approach to dealing with those, but inspections demand strict regulatory requirements or commitments.

MR. RAY: Okay. Well, we -- I don't want to go on with it now, but I'm saying this because we're going to be dealing with this issue in a couple of months as a committee, in the wake of some of the things in AP1000 that have occurred on the design side.

So that's why I was just asking if you're calling all of this inspection, but it looks to me

like you're focused on the process on the front end, so I wanted to be sure that we weren't talking about something else that was also being done.

I understand that's not the case. Okay.

MR. SUNSERI: Somewhat related to this -- and maybe you're going to get to this in your presentation, but we were at the Vogtle site, and they're reporting that their nuclear I&C integration is something on the order of 80-plus percent complete.

So how does that translate into when do you do the inspections and how many inspections -- have you inspected that work already? And we're kind of -- if you're going to get to that, that's fine, but if not, I'd like to hear about that.

MR. MATHIS: Okay. Yes. And it's related to the inspection strategy, and the next slide will show you just the different points at which we are triggered to do our inspections.

But our inspections are driven by milestones, and those milestones are -- they coincide with the appendices of the inspection procedure. And as you can see, it's modeled after the system and software life cycle phases.

And you can see from this slide that you

have six phases: You have the planning phase, requirements phase, the design implementation, integration, validation and test, and the installation.

And at the completion of each of those phases triggers an inspection point for us to go out to do -- to review and inspect the activity associated with each phase.

So each phase will consist of output documents, output activities, whether it be plans, whether it be requirements traceability; it could be the system code. So at each phase we will go in and inspect the different outputs of the phases.

And on this slide you can see, just at the bottom, it's just a general kind of anticipatory time line of when we anticipate the phases to be complete and that we can go out and do our inspections.

At the milestone 5 you see that there's going to be a transition that's made from inspecting the development side of the software to the as-built verification, which will be done through an installation phase at the plant, at the site-specific plants.

And all of our inspections are a coordinated

effort between NRO and Region II, so the inspection teams consist of Region II inspectors, as well as vendor oversight inspectors and technical staff from the Division of Engineering.

MR. SKILLMAN: Robert, what OE, what operating experience has been integrated into your inspection protocol? For instance, various plants have upgraded their control systems to digital. So I would presume that there have been many lessons learned from old Part 50 plants that did upgrades, and I would think that would have influenced your inspection strategy and perhaps the thickness of your magnifying glass for certain features that you might be inspecting.

Can you speak, please, to what OE may have been incorporated into your inspection activities here?

MR. MATHIS: Okay. And, yes, we were -- we've been privy to some of the lessons learned that -- at some of the operating plants.

One of the differences for the AP1000 digital I&C development is that they committed to the life cycle process of development, and a lot of the operating plants did not have that same commitment, in

the sense of how they're going to develop, how they're going to implement those digital upgrades.

So it's going to be a little different. It's sort of apples and oranges in the sense that the AP1000 development is going to go through that rigorous process where you have to complete each phase, you have to have required inputs; you have to have required outputs; you have to have independent verification and validation at each stage.

And that's different from what the operating plants are doing, but what we have seen is that it's paramount that you do look at the process as it develops, that you make sure that you have inspection points that cover just critical aspects of the development process, and then at the end we want to make sure that when they install it that everything is in alignment with what they've -- what the process that they've laid out that we've inspected prior to installation.

MR. SKILLMAN: Okay. Thank you, sir.

DR. BLEY: Jimi, I want to -- I'm sorry. Jimi's back here.

Robert, I apologize. Some years ago the committee dug into this area in quite a bit of detail,

and eventually we got some assurances that because of the state of the I&C design during the certification process, which wasn't nearly complete, such that it didn't get the normal kind of review it would have had at that stage, that at this stage of inspection, rather -- at least at the guts of the design, rather than an audit-like approach, this would be a more thorough examination.

And eventually there was an SRM that said that our committee should be involved in the first of these that go through under Part 52. So we're real interested in that.

We've got a scheduled meeting on ITAAC, but I think that's with respect to piping, and nothing yet on I&C, which we're a little more interested in.

I'm glad to hear that you have the headquarters staff involved, and I'm assuming that's one of the reasons. Can you say anything about the general topic I just raised and how that fits in, how that might change how one carries out this inspection over the normal kinds of inspections for ITAAC?

MR. MATHIS: Yes. So the intention of -- and you're referring to when you don't have the complete design to review at the licensing phase.

DR. BLEY: Which we did not.

MR. MATHIS: And so what this process is going to do and help to ensure is that, first of all, they commit to a rigorous process, and then we want to ensure that they follow that process meticulously.

And what that does with our inspections and with the way the ITAAC is laid out is that it ensures that we don't miss key critical points in the development process.

So that's going to help to ensure that the design that's being developed is going to be -- you know, it's going to be for safe operation of the plant.

DR. BLEY: Okay. That sounds good, and we look forward to learning more as you go ahead. Just one that comes off the top of my head is there's an IEEE standard that they have to meet as an ITAAC on single failure examination.

But your examination needs to be more than just, yeah, they did that IEEE -- they met that standard; that you actually -- that actually some people were taken in to make sure they did it reasonably well.

MR. MATHIS: Yes, definitely.

DR. BLEY: Okay. Thank you.

MR. MATHIS: And that brings us to our first example. Our first example comes from inspection that occurred in May of 2012, and it was the inspection of the Protection and Safety Monitoring System, and it's the requirements phrase.

Now, this inspection was for Vogtle's Units 3 and 4, so it was an inspection of the licensee, but the inspection was performed at Westinghouse, where the developers reside.

Now, one of the results of this inspection was a notice of violation, a green ITAAC finding, and it was associated with ITAAC 2.5.02.11.Bravo, and that deals with the development process, and Bravo spells out the requirements phase specifically.

And 2.5.02.12 deals more with the management of the process; deals with the software management, configuration management, and the independent verification and validation.

So those were the ITAACs that were associated with that finding, and it related to the -- it related to design control inadequate translation of those requirements from several standards into the design, and one being IEEE 1012, which is the software

verification and validation.

And that has a requirement that the IV&V team, the independent verification and validation team perform minimum tasks and generate certain reports. And it was identified that some of those tasks were not complete, which included software requirements evaluation, interface criticality, hazard and risk analysis.

So we identified that those hadn't been completed as required by the IEEE standard, and also for ASME NQA-1, the quality assurance program requirements, it's a requirement in there that talks about verification and validation activities must be separate from design activities. And there was a situation where the design team -- the IV&V team was taking credit for some of the design activity, so there was no independence.

And also in relation to IEEE 1074, that talks about the overall development process, and that's where the life cycle -- where we went through those six phases, and that says that all code development -- all software development must follow that process, that life cycle process, and it was identified that it's a package of software that's

called Reusable Software Element Documents.

And what that is is like -- it's a packaged logic that you're going to use in multiple areas of the development or the software. For example, the coincidence logic for two out of four; you're going to use that in multiple areas, so that will be considered a reusable software element.

And it was identified that the development of that logic didn't follow the life cycle process. They kind of brought it in kind of after the fact. And we identified that, and it was determined that, you know, it does need to be -- it does need to follow that process and make sure that it's implemented according to 1074.

And then IEEE 803 talks about the software requirement specification, and that standard requires that the specification be unambiguous, it be complete, which means fully traceable, and also that all requirements are ranked for importance, and so we were able to identify that a couple of requirements were ambiguous, which means that they could be interpreted in several ways.

So unambiguous means there's really only one way you can interpret that requirement, so the

requirement has to be detailed enough that you don't -- there's no misinterpretation of what it's saying.

And then also it wasn't -- there was some requirements that were not complete, as in you could not fully trace it all the way back to its foundational requirements and then also were not ranked for importance. You know, what's safety related, what needs to be addressed in certain ways in certain areas.

And so the resolution for these issues: The corrective actions have been completed and have been verified by inspection, and some of the -- and those corrective actions included the minimum IV&V tasks being performed; traceability to the software requirements specification being complete; and then also all the requirements being ranked for their importance.

And they also did training of the personnel on key processes so that they all understood how different things affect the incorporation of standards and codes into their processes and procedures.

And then finally they also performed the -- a detailed mapping of the codes and standards into

their implementing processes and procedures.

MR. SUNSERI: So that all sounds good. Were those issue resolutions applied on a broader scale, or was it just specific to this protection and safety monitoring system? Because the issues that were missed looked like they could be broad reaching and not just for Vogtle 3 and 4 but the whole AP1000 setup.

MR. MATHIS: Yes. So this initial inspection was our first cut at using the IP, and the first rollout of that was to inspect Vogtle's 3 and 4. But, yes, it did require that corrective actions be applied across the board to all the units.

And it was at Westinghouse, so as Westinghouse are implementing these corrective actions. It's going to impact all four units.

MR. SUNSERI: So just a follow-up: I confess that I don't know the thresholds for the risk ranking of the violations. Green seems fairly minor compared to the most significant of this issue, though.

MR. MATHIS: Yes. It's low safety significance, similar to what Tony was talking about, in the sense that the issue would not impair the

safety function, so that's why it's a low safety significance.

It's still significant, but since it didn't impair the safety function of the system, that it was considered low.

DR. BALLINGER: The IEEE requirements are specific. The NQA-2 is much broader. So I think what Matt was thinking about was did this trigger maybe an awareness that in future inspections, looking to see if there are any other issues related to not adhering to NQA-1 that are not even -- not instrumentation control?

MR. MATHIS: For our purposes, that was our focus. Now, when we come back from our inspections, we will pass on -- well, we will make known our findings, and those are tracked. And at that time you can generate inspection samples for the programmatic inspections that will be performed at the sites specifically.

MR. SKILLMAN: Robert, you communicated with respect to IEEE 1074 that the issue there was the use of reusable logic, and the logic that was found to be reused was the two out of four --

MR. MATHIS: That was what --

MR. SKILLMAN: -- and it was used multiple times. It seems to me that that's just a setup for a common cause failure. So I would wonder how broadly was the recyclable logic incorporated, and how would the corrective action make sure that the fix fixed everything that had been impacted by the oversight?

MR. MATHIS: So when we do our inspections and we review those corrective actions, we are able to -- in their software configuration they have to identify all code, so they will identify all RCS reusable software.

And when we look at those, we're looking to make sure that those were implemented according to the IEEE 1074. So it's -- they will do -- they have been good to do an extent of condition and looking at everything that's been done.

One of the key things about this finding is it was at a high enough programmatic level that anything that was developed as a part of the reusable logic was in question, so they had to review, and then we would go back in and make sure that we were satisfied with their corrective actions.

MR. SKILLMAN: Okay. Thank you, Robert.

DR. BLEY: Just one more. This was all on

the requirements phase. Are you finished inspections on the requirement phase, or have you just begun that or in the midst?

MR. MATHIS: No. We're complete with the requirements phrase. We're now through into the testing phase.

DR. BLEY: So you've been through the design and implementation phase? That's all finished?

MR. MATHIS: Yes.

DR. BLEY: And all those inspections are done and documented?

MR. MATHIS: Yes.

DR. BLEY: Okay. Thank you.

MR. MATHIS: So actually our next example is an inspection that was performed last year in March, and it was the PMS, and it covered the design, implementation, and testing phase.

This inspection was considered what you call a one for four, which means all -- it was an inspection that will impact all units: Vogtle's 3 and 4 and V.C. Summer 2 and 3. This inspection was at Westinghouse as well.

This inspection, which was different from the previous example -- the previous example, it was a

Region II led inspection. This inspection was led by the Vendor Oversight Branch, and the inspection team was still consistent with regional inspectors and technical staff from the Division of Engineering.

The result of this inspection were several notices of noncomformance, and they were related to inadequate equipment qualification. One of the issues identified was current transients in isolation devices. In IEEE 384 there's a requirement that isolation devices on the nonsafety side cannot impact the safety circuit.

And in this current issue, the qualification testing did not take into account the maximum current transient. They did not use a maximum current fault that the isolation device can see.

They used a less conservative lower current when they did that test, and we identified that testing, looking at their test reports, and seeing how they implemented that test and saw that that current level was not the worst-case scenario for what that device would see, so -- which meant that they couldn't determine what would happen if that isolation device did see the maximum credible fault current.

In relation to the electromagnetic

compatibility testing for PMS cabinets, this was a issue where they qualified one brand, make, and model of a cabinet, with the intention to envelope other brands and other makes and models used in other areas of the PMS system.

When we reviewed those test results and what was currently being used, we found that it didn't adequately envelope the other cabinet, which means there were certain frequencies in certain configurations that were not enveloped. So it sort of -- it brought in -- the qualification testing in question.

And then also there's a last issue with the dedication of measuring and test equipment used for the electromagnetic compatibility testing, and in that case it was just -- they used a third-party calibration service, and they did not require the right critical characteristics in the sense of tolerances, accuracies, things that were associated with the qualification of that equipment.

For this example the corrective actions were still in process, and we will verify those corrective actions by inspection, but we anticipate those corrective actions to include the retesting of those

isolation devices.

As a matter of fact, I believe we just came back from an observation for that in one of the labs, and also they would perform an analysis of those PMS cabinets that were not enveloped, to determine if retesting was required for these and then also to ensure proper dedication of the M&TE services.

Are there any questions on that example?

MR. RAY: Let me just use for my -- any of my colleagues here. If the outcome -- this could be very serious, but if the outcome determined after they did all these things correctly that there wasn't a serious problem, then you'd -- it'd be a green finding, but it would still be a violation for having failed to implement these requirements properly.

So I think we're kind of perceiving, well, gee whiz, this could have been a significant outcome. The green finding, if it's a green finding, if there's a violation, simply indicates that while, in this case, it didn't turn out to result in something that wouldn't meet performance requirement, but that doesn't mean that these omissions and failures weren't very significant in and of themselves from a process standpoint.

MR. MATHIS: That's correct. And in this situation, this was led by the Vendor Oversight Branch, so it was a notice of nonconformance, but each of these findings always inform our future inspections. They're going to inform things to look at, whether we need to increase our inspection samples, because when we see things like this, we want to make sure that we don't -- that there's -- essentially that we have reasonable assurance that what they're developing is going to be safe.

So we try to use those things to make sure we dig into the program. As we see different findings and issues, we'll increase our sample size, we'll increase our inspections.

For example, the first example of those corrective actions, it took I think three or four inspections for us to be able to close out those corrective actions, and it spanned over a year and a half, so these are things that, you know, from a regional perspective we don't take lightly and we try to inform our future inspections based on the current performance.

DR. BLEY: From what you said earlier, can I infer that you've also finished your inspections on

the integration phase?

MR. MATHIS: Yes, in terms of the digital I&C, yes, the integration is complete.

DR. BLEY: And you're partway through the validation and testing inspections?

MR. MATHIS: Yeah. We are currently doing inspections observing their testing.

DR. BLEY: Okay.

MR. MATHIS: Their validation and testing of the --

DR. BLEY: And then the only thing left would be inspections at -- after installation on the site?

MR. MATHIS: That's correct. We'll be -- we are going to have inspections as they install them and then ensure that everything is as they've developed today.

DR. BLEY: Thank you.

MR. MATHIS: Are there any other questions?

MR. SKILLMAN: Colleagues, any questions for Robert?

Walt?

DR. KIRCHNER: So I'll start with a specific question and then turn it to a generic one. When you

get -- we've been provided a critical path schedule for Units 3 and 4, and other than -- the only thing I see on it that's I&C related is cable tray being on the critical path in early '17.

But I'm curious how many ITAACs are associated with the control systems and instrumentation in the plant and what kind of resources are needed to deal with that inspection schedule. I suspect that it will be a very compressed time period to do those inspections if they are to stay close to this schedule that we were provided with.

So just as -- now I'll make the more generic question: We were told that there are about 800-plus ITAACs for each of the two plants. And it looks like you have to dispense with on the order of 600 or so in the next two years as -- to stay on schedule close to what's been published.

And I'm just curious about what that means in terms of field inspections resources and such that meet that ambitious schedule?

MR. MATHIS: From the first question about the ITAACs associated with digital I&C, it's about, I want to say, six or seven that are associated with

digital I&C, but what's different about those, they are primarily -- they cover the program, so they're bulleted, they're -- they have subparts to each of them.

And from a digital I&C perspective, one of those subparts is installation, and so from the regional perspective, we have our inspection branches, and we have planned and, you know, we are privy to the construction schedule, and we tailor our inspection schedule to that and make sure that resources are available through the regional planning.

Did that answer your question?

DR. KIRCHNER: Yes.

MR. SKILLMAN: Colleagues, any other questions for Robert?

(No response.)

MR. SKILLMAN: If not, Robert, thank you.

Tony, thank you.

And our next team up will be Phil and Mike, and we're going to push on to stay on schedule. We've got members with critical travel, so we're going to do our best to stay right on schedule here. Thank you.

MR. McKENNA: Good morning. I'm Phil McKenna. I am the senior resident inspector at Surry

Power Station. I've been there for three years. Before that I was the resident inspector at the Salem plant in New Jersey in Region I. I joined the agency in 2008, and prior to that I was in the Navy as a submarine officer for 25 years.

Today I will present the finding we had at Surry on the FLEX modification they placed in their low head safety injection system.

Surry Power Station, just to familiarize yourself, is a three-loop PWR, Westinghouse design. They have a unique design-based accident decay heat removal system, in which they have gravity flow from their ultimate heat sink, which is a two-mile-long intake canal, which I'll show you next.

It's right there, heading from the top of the slide to the bottom of the slide from the James River. On the right-hand side is the intake canal; on the left-hand side is the discharge canal.

MR. SKILLMAN: That is the James River Reserve Fleet?

MR. McKENNA: That is the James River Reserve Fleet. That is correct.

MR. SKILLMAN: Yes, sir. Thank you.

MR. McKENNA: So this presentation will be a

little unique; I'm going to put you through a bunch of photos to explain how they hooked this up.

So starting off, looking at the circled portion is the safeguards enclosure on the Unit 1 containment that's between the RWST on the right-hand side and the containment structure on the left-hand side.

This photo's a little blurry, but it shows the safeguard vault where the connection was made. Again, that's the safeguards vault. This is the door leading into the valve pit of the safeguard vault, where the low head injection pumps, piping, and valves are located.

The red lines we're going to show you are the connections on how they would hook up their FLEX modification from the safeguards room to their valve pit. So heading into the safeguards room, they put in a mechanical connection to their containment spray system. There's the containment spray pump. And this is how they would move water out of the RWST and any enclosed primary system.

So they would hook up a hose to that mechanical connection, put it through their temporary RCS injection pump; that would provide the mode of

force for the water into the valve pit and into the connection they supplied for their low head safety injection.

So this connection is at ground level, goes down two levels, through the valve pit, to where the low head safety injection pumps are and the valves and the piping. I will show you through these pictures -- there's the hose connection. This is a little more detailed photo -- it shows the seismic support of the piping system, which is important and I'll get to next -- and then down through the first level of the shielded deck.

I only have a picture of the piping after it was cut, and I'll get to that next. So going through the top hole to the safety-related containment isolation valve, which is shown right there, into the welded connection on the low head safety injection pump, which came off the isolation valve to the pumps, going into the hot leg injection.

So I will stop right here and show you what the violation was. So as you look at that piping going into the safeguards building, directly above it was this roofing structure which was just sheet metal.

So when they designed the modification, they

did not take into account a missile that could come through this shielded roof -- or unshielded roof -- sorry -- and hit the structure and translate through to the low head safety injection piping and potentially break that piping upstream of the containment isolation valve with no isolation.

So they fixed that -- there's the old design and new design. When we brought this to their attention, we were doing an inspection as part of plant modifications, an inspection we could do as part of the ROP.

This finding happened back in November of 2013 as licensees were just starting to place their mechanical and electrical FLEX modifications into their system during refueling outages.

We had guidance from the region that we needed to inspect these. Later on there would be a TI to do the whole inspection of the system, but as we were putting them in, there's a risk that they could have some type of unforeseen consequence, which happened in this case.

So we inspected the plant modification inspection procedure, and originally we brought it to their attention that this was the only support they

had on the piping system for seismic support, so we questioned if that adequate or not.

We questioned their civil design engineer person. He went and walked down the system and said, Yes, that's per design, but this was not per design. They didn't take into account this roofing structure when they placed this piping here that translated through the deck.

So they originally, when we brought that to their attention, went and walked it down. They declared the system operable but nonconforming. And by the time that we could have agreed or disagreed with that, they decided to cut the pipe so they would not have a potentially inoperable system.

Now I'll show you how they redesigned it. Again, they redesigned the seismic structure because they put in a braided flex hose that went from the top of the shielded deck down into the low head safety injection piping, and that shielded -- that braided flex hose would absorb any missile that would hit the piping above, so that was the corrective action.

MR. SKILLMAN: Well, if you'd go back to the previous image, it appeared as though, in the old design, that is a very long cantilever. Any impact on

the dead end to the left would have, I would think, tended to shear right at the seismic support.

MR. McKENNA: Exactly. So it was good for seismic, but it was not good for missile that would hit this and --

MR. SKILLMAN: Okay.

MR. McKENNA: -- translate that. Exactly.

MR. SKILLMAN: So below what is the new design, there's a vent valve goes through the -- or the T goes through the deck; that goes down and marries up to that flexible piece?

MR. McKENNA: That's correct.

MR. SKILLMAN: So that there is no transmission of the load.

MR. McKENNA: Transmission of the load to the low head safety injection.

MR. SKILLMAN: Now I understand. Thank you.

MR. McKENNA: And this is the summarization of all the photos that was placed in our inspection newsletter article that we wrote for this issue. We've seen all those photos.

So now for just some words at the end here and follow with some questions. Again, we were doing the inspection per a plant modification IP, inspection

procedure. The way we divvied it up, one resident inspector looked at all the mechanical systems; that was me. The other resident inspector looked at all the electrical modifications.

Surry completed their FLEX modifications on Unit 1 back in May of 2015 and Unit 2 in December 2015, and now they're waiting for their safety analysis to be completed before the TI 191 is conducted on them.

Again, our inspections were done out the TI 191. In fact, TI 191 was not even issued yet while we were doing our inspections.

MR. SKILLMAN: Phil, in the images that you showed before and after, when was the mod completed for the before configuration. You showed the old and the new, so for the old, when had the VEPCO team completed that original FLEX mod?

MR. McKENNA: That insulation happened during a Unit 1 outage just before they started up from the Unit 1 outage.

MR. SKILLMAN: But I was -- the reason I asked the question is because back in 2011, 2012, in our full committee meetings, we pondered the idea that well-meaning men and women would march ahead,

anticipating what was needed for what was going to be FLEX.

And we knew that some of those folks were at risk, and we knew that there would have -- or we presumed there might have to be rework. And so we were very sensitive to maybe the industry, in their zeal to implement, might have to do mods twice.

And I'm wondering if this is one of those examples.

MR. McKENNA: So this is probably one of those examples. This happened in November of 2013. What I failed to mention was their original design, which was done up in Dominion headquarters, knew there may be an issue with missile in this case.

They originally had that containment isolation valve on the upper portion of the deck. They moved the containment isolation valve down below the shielded area --

MR. SKILLMAN: But the load was still there.

MR. McKENNA: -- but didn't take into account the cantilever issue that you brought up.

MR. SKILLMAN: Okay.

MR. McKENNA: So it was a little bit of a miscommunication between Dominion headquarters and the

onsite civil engineer, who knew that would have been an issue.

MR. SKILLMAN: Thank you, Phil.

MR. McKENNA: So again our violation development, the seismic support, we were back and forth; tornado missile concern. They originally declared it operable but nonconforming, and they decided to cut the pipe right away, because they knew they had an issue with operability -- potentially had an issue with operability and went back to the drawing board to redesign it.

And the performance deficiency we cited it against was their procedure for failure to do the walkdown to ensure there was no adverse effects from the design change as part of their procedure.

And the violation itself was this 10 CFR 50, Appendix Bravo, Criterion III, design control. And it was green finding.

On this last slide I just wanted to highlight -- a lot of words here, but what I really wanted to highlight in this slide was the agency has issued a Regulatory Issue Summary back in 2015 on tornado missile protection and Enforcement Guidance Memorandum 15-002, which has some enforcement

discretion for missile-protection issues, but Surry would not have fallen into this case if this was issued, because this was really a self-inflicted -- they did a design change, and it wasn't their original licensing basis; they were affecting their original licensing basis, so they would not have fallen under the enforcement discretion in this case.

And that is my last slide. Any questions?

DR. BLEY: Well, not quite related to your presentation, but your one slide showed your article in the inspector newsletter, which I didn't know there was such a thing.

Are those on the in-house websites where anybody can find them and read them?

MR. McKENNA: Yes. They are on the in-house website.

DR. BLEY: That's pretty interesting.

MR. McKENNA: They're issued quarterly, and they typically have about seven to ten articles from inspectors that are submitted from regional inspectors and from the inspectors out in the field.

DR. BLEY: All right. I'll keep an eye on that. Thank you.

MR. McKENNA: In fact, the last one was just

issued this week.

DR. BLEY: Thanks.

MR. SKILLMAN: Colleagues, any questions for Phil, please?

(No response.)

MR. SKILLMAN: Phil, thank you very much, sir.

Mike, you're up, please.

MR. CAIN: Good morning. My name's Mike Cain. I'm currently the senior resident inspector assigned at the BWXT Fuel Facility; it's a Cat 1 facility in Lynchburg, Virginia. Prior to that I spent seven years as senior resident at Plant Vogtle Units 1 and 2, the operating units.

MR. SKILLMAN: Let's hold -- let's get the correct images up there. We need the Mike Cain set, please.

MR. CAIN: Prior to Vogtle, I was a senior construction inspector based here out of Region II Division of Construction Inspection; also senior reactor inspector in Division of Reactor Safety; and then prior to that I was a resident inspector at V.C. Summer. Before that I spent 10-1/2 years working for a licensee, CP&L, H.B. Robinson plant; and before that

15 years with the Navy.

My briefing for you today concerns PI&R inspection I was a team member on. Just a note: This is probably my fifth consecutive PI&R inspection at Brunswick Nuclear Power Plant, Southport.

MR. SKILLMAN: For my colleagues, explain PI&R, please.

MR. CAIN: Problem identification and resolution inspection. It's now a biennial inspection. Two weeks onsite, one week off; one week prep, one week docs. It's a significant time.

MR. SKILLMAN: Thank you, sir. Thank you.

MR. CAIN: This issue concerned this particular relay. This is an Allen Bradley 700-RTC relay. It was purchased commercial grade off the shelf from Texas Instruments. This is, of course, a picture straight down -- looking straight down at the relay.

The picture on your left shows a 16-pin dual inline package Motorola timing chip. This was a custom-made chip by Motorola for Allen Bradley. Allen Bradley had not been selling too many of these. Motorola raised the price because, again, it was a custom chip.

Allen Bradley decided to go with a different design, so the picture on your right shows right here a new device -- or similar device, is what Brunswick called it when they were investigating the issue that we're about to talk about.

This device, if you plug that part number in in Google, it will come up -- your very first hit will tell you it's CPLD, a complex programmable logic device made in China.

I think you can also kind of see this is a daughterboard that's riding up on top of the motherboard here, whereas the Motorola chip was hard-mounted -- surface-mounted to the motherboard.

A little closer picture of the CPLD. And then here this picture shows where the CPLD board is sitting in a plug-in package. This raised another issue during the inspection as to whether or not the seismic qualification of this relay was valid, because now you have a different mounting configuration for a component.

So here's kind of the timeline. In March of '15, EDG3, the output breaker, fails to close during LOOP/LOCA, and that's loss of offsite power/loss-of-coolant accident test.

This was the first time that this test had been run in this configuration. They had just done changes to the procedure to allow them to recoup some critical path time. So they're doing the test a little bit differently than years past, which is kind of one of the major reasons why this problem reared its ugly head.

The next day they replaced the RCR and RCR-X relays as kind of a shotgun approach to the issue. They rerun the test, and it passed. They go ahead and make EDG3 operable again, take EDG4 out -- now, Unit 2 is in an outage at this point; you have to understand that.

Take EDG4 out of service and, as a proactive measure, they go ahead and replace the RCR relay, simply because of the issues that they saw on 3. And they go to PMT, the EDG4, it fails to close; it chatters. It slams in four separate times and then subsequently opens back up on anti-pump.

They pull all of these 700-RTC relays out of stock, total of nine. They bench test them in a configuration similar to the hookup in the field, and all nine of the relays chatter. Now they know they have a real issue.

They go back and retest EDG3, this time a little bit differently, because in the original test, when they were trying to do the right thing, they took a recorder and they hooked it up across the RCR relay. By doing that, the recorder acted as a suppression device and masked the problem.

So this time they tested it without the recorder hooked across the RCR-X relay -- or the RCR relay, and same thing, the breaker cycled several times before it opened up on the anti-pump.

So on a loss of offsite power, the RCR relay energizes, it's got a .7 time delay, which is what that CPLD does. A CPLD is pretty neat from an electronics perspective. It allows you to program various logic gates and/or gates into numerous configurations.

You can make it a timer, an oscillator, just lots of different things, and they're cheap, very cheap. So that's what a CPLD does. But what we didn't realize or what Brunswick didn't realize at the time was, number one, that the design change had been made by Allen Bradley.

Original Allen Bradley reported back that they made the change in 2009, 2010 time frame. We

basically refuted that, because the relay that was taken out of EDG3 had a 2008 date stamp on it.

Further research, it was inconclusive, but it's possible this design change could have taken place as early as 1994.

MR. SKILLMAN: So, Mike, just let me catch up to you here.

MR. CAIN: Okay.

MR. SKILLMAN: I'm finding this saga very interesting. It appears to me as though EDG3 and 4 were both inoperable because neither had output breaker commands that were dependable.

MR. CAIN: That is correct.

MR. SKILLMAN: So even though the unit is in outage, at least the work we did at Three Mile Island, we demonstrated that the risk during outage and risk during power operation are almost identical.

So you must have -- this plant must have been in a very high risk status with both EDGs inop.

MR. CAIN: There was a time period of approximately 12 minutes when both diesel generators were inoperable, and it was a total loss of safety function --

MR. SKILLMAN: Yes, sir. Okay.

MR. CAIN: -- for Unit 2.

MR. SKILLMAN: Serious.

MR. CAIN: And that's one of the issues that Brunswick failed to properly identify, was the loss of safety function, which, you know, triggers a series of events that they have to go through. They had to be prompted to do that.

Testing confirmed that the old-style relays, the ones that had the 16-pin Motorola chip, they worked fine every time. Any relay that had this new CPLD device was subject and did chatter, based on EMI that was produced by downstream relays de-energizing, so the inductive kick, as a coil de-energizes and the magnetic field collapses, generates a voltage spike on the terms of about 32- to 3500 volts.

That spike is then transmitted back upstream to the RCR relay, and it basically kept resetting the timer. So now the breaker would reclose, and we'd go through the process again, and it would sit and pump until the breaker opened up on anti-pump. So that was the issue.

April 1, NLI, which is a third-party dedication facility, issues a Part 21, stating that Allen Bradley had made this unannounced design change,

again in the 2009, 2010 time frame.

As this issue progresses, we'll come to find out there were a total of five dedication facilities that had dedicated nearly 700 of these 700 relays to 12 different licensees, used in safety-related applications incorrectly.

The dedication facility located in -- what's the town right next to Harris? They used to call it the E&E center; it's now called CRDF, Central Receiving Dedication Facility, so Duke has their own dedication facility. They do not use a third party.

They used a package -- a dedication package that was originally developed in 1999 that was subsequently revised, look at again in 2001, and it was the 2001 package that was used to dedicate the entire series of relays that was found in stock at the point that this issue arose.

Basically the dedication package only looked at two things: onsite physical dimensions and did it time? That was it. So nobody ever opened it up originally when we started asking questions; you know, why didn't you open it up and look?

We were told, It's too hard. Well, there's two screws that you have to undo to open this thing

up, then that circuit board pops out at you.

It was a bad dedication package, is what it came down to. And this is only the beginning. As analog devices become obsolete, these CPLDs are going to be used in numerous applications.

The licensee attempted to say, Well, Texas Instruments didn't tell us they made a design change. Well, the fact is you're buying it off the shelf; they don't have to. They can make any change they want. It's up to that dedication facility and the testing to identify whether or not you meet design and the critical characteristics; that was not done during this.

So I don't know where else these CPLDs are going to pop up. We've already found them in the Hagan 71-, 7300 process systems used in reactor protection safeguards.

MR. SKILLMAN: So has a bulletin been issued? Has enough information been blast-cast to the industry that communicates, heads up, be careful?

MR. CAIN: This is what got done. Initially an OE note was released July 2015. It was followed up by an OpE COMM in August of 2015. They also issued Information Notice 1601 and a Regulatory Issue Summary

regarding commercial-grade dedication. So as an agency, we thought it was pretty important.

MR. SKILLMAN: Did this result in a red finding at Brunswick?

MR. CAIN: It did not. Where we ended up, as you see there at the top, it went through a Phase 3 SRA evaluation. It screened green, mostly due to the exposure time of only 12 minutes.

So gave them a violation against Criterion III for design control, basically a bad dedication, and then also Criterion XVI for failure to promptly identify conditions adverse to quality, one of which was significant, and that is the total loss of safety function.

MR. RAY: Let me intervene here for a second. This sort of illustrates, in response to Dick's question, what I was saying earlier.

A significant issue, in terms of the violation and what the violation cites against, but because in this particular case it had only the effects that were described, it winds up not being highly safety significant.

We have to keep in the mind the separation of those two things. What are the implications of it?

We note that the citation, again, is back against Appendix B, but were we ever inspecting or auditing or whatever words you want to use -- audit is one of the 18 criteria -- against Appendix B? Well, that's a question for another day, but that's a question that can be asked.

In other words, if they weren't implementing Appendix B Criterion III, why didn't we realize that before we found this consequence?

MR. CAIN: Yes, sir. It's a good question. I know going forward the Vendor Branch within NRR has taken a hard look at commercial-grade dedication and implementing, I guess, gates to ensure that this type of issue, this programmatic issue that we saw with five dedication facilities doesn't happen, and also trying to get word out to the industry that you're going to have to start opening these things up and look.

MR. RAY: Well, one other comment: Having run a plant, as some of my colleagues have, too, for many years, this is an expensive process to meet these requirements, relatively speaking.

I'll note that yesterday an announcement was made by the industry that there will be a 30 percent

reduction in O&M spending within the next three years as an industry-wide initiative. These things are going to be in tension, in my personal opinion.

MR. CAIN: And priority has to play a role in where you're going to reduce: things that are important to safety, things that --

MR. RAY: Well, it could be whether you reduce, also.

MR. CAIN: True.

MR. SKILLMAN: Mike, I think you made a very important point. This is just a headline example of failure to understand critical characteristics, and in this particular case there are characteristics occasioned by capacitance, inductance, secondary effect when you change a little doodad on one of these cards.

And you're right. As we go from analog and replace analog with digital, we are probably going to see more and more of these. But we can stem the unintended consequence by making sure that the people who are dedicating understand how sensitive this equipment is, because that cycle for time and reclose, time and reclose, that's really getting down into understanding the circuit and understanding how the

little device is affected by a very slight change.

So this is really the critical characteristic poster child.

MR. CAIN: It is.

MR. SKILLMAN: Thank you, thank you.

MR. CAIN: If there aren't any further questions, that concludes my presentation.

MR. SKILLMAN: Colleagues, any further questions for our colleague Mike Cain?

(No response.)

MR. SKILLMAN: If none, Mike, thank you.

Phil, thank you.

We are going to recess until 1030 hours. We are in recess.

(A recess was taken.)

MR. SKILLMAN: Ladies and gentlemen, we are back in session, and we are on Topic 5, Weld Overlay.

Brendan, you're up. Thank you.

MR. COLLINS: Thank you, sir. Good morning, everyone. Since we don't have the presentation up right now, I will give you a little background on myself.

I'm Brendan Collins, reactor inspector here in the Division of Reactor Safety and Engineering

Branch III. A little of my background, since my colleagues did so, I was nuclear Navy operator for 12 years, then I went and got my bachelor's and master's in material science and engineering, specifically in metallurgy, so that comes to bear here.

Then I got hired by the NRC, and my best friend likes to refer to that event as me coming back to the mother ship. And now I've been working here for about 10 years.

So with that, we're going to talk about weld overlays today. That's sort of generic, so I'm going to make it a little more specific. Specifically -- and this is the breaking news portion of the presentation -- breaking news is this is we may have had the first instance in the industry of a crack caused by intergranular stress corrosion cracking, or what many of you may know as IGSCC, going all the way into the overlay material itself. So that's what we're going to talk about today.

So first I thought I would start with a broad overview of everything that's happened for more or less the past 20 years, to give you an understanding of what's happening recently.

On the upper left you can see back in the

1980s we were well aware that IGSCC occurred. The way that it was being addressed was it was being detected by ultrasonic examination, and that was being driven by ASME section XI requirements.

There were various repair mechanisms or mitigation strategies that were in place at the time, which were weld overlay, which is specifically something different than a full structure weld overlay, and we're going to talk about that; mechanical stress improvement process, which is where they literally squeeze the pipe and change the stress condition which is supposedly mitigation in strategy.

Down on the left you'll see that January 1988 we put out two documents that sort of gave the industry guidelines about this is the way that -- once you find this condition, if it exceeds the ASME requirements in terms of an allowable flaw, these are ways that you can deal with it.

And it more or less reiterates what had already been stated through the '80s, but it set up some guidelines for frequency of the inspections, depending on the strategy that you chose.

So one of the other reasons that this is important is because at the time, in 1988, when this

particular site found this issue, there was no such thing as a full structural weld overlay. We're going to talk about why that was, but it's important to know that they didn't have that option at the time, so they couldn't have possibly chosen that option.

MR. SKILLMAN: Brendan, before you go on, you've mentioned, at the site. Can you disclose what site this is that we're talking about?

MR. COLLINS: That's a great question. I had meant to do that during the opening. Unlike my colleagues, one of the challenges of this particular presentation is that we are still in the middle of assessing the site's actions for this.

So because it's predecisional, it's very generic. I will do my best to answer questions, and we're going to stay on the topic of the technical aspect of this --

MR. SKILLMAN: Fair enough.

MR. COLLINS: -- rather than --

MR. SKILLMAN: Okay. Fair enough. I was just curious.

MR. COLLINS: Yes. Thank you very much for asking.

MR. SKILLMAN: Because we do have a member,

not with us today, who is very deeply involved in this, and I know that that member would be very interested in your material.

MR. COLLINS: You know the imagery of somebody with the whip and the chair and the lion? That's where headquarters is at with this right now. They're very excited to start the process. We've got people who are interested.

MR. SKILLMAN: That's why I read my intro. We're not here to oversee or to judge; we've gathering information. We are an information-gathering team, and we'll caucus back home.

MR. COLLINS: Hopefully by the time I'm done you have all the information you need.

MR. SKILLMAN: Thank you.

MR. COLLINS: So with that, the site found this issue in 1988 and installed a weld overlay, which was a leak barrier, not a full structural weld overlay.

Since that time they've been doing UT exams, all the way up into March 2016, where they found that the crack had actually grown through, possibly into the overlay, and they installed a full structural weld overlay.

Along with that, what this slide also represents is that in March 2006 we approved BWRVIP-75-Alpha. Well, the largest change in that document from what we had previously issued was we relaxed the requirements for inspection from a very frequent inspection to a once-every-ten-years kind of a situation, because we had a much better understanding of how IGSCC affects these particular welds.

So with that, let me go through actual illustration. Now, this is a representative sample; it is not the particular site's configuration. However, at that particular site they are dealing with a recirc nozzle in particular, and for those who don't know, a recirc nozzle is more or less the inlet nozzle to the reactor vessel.

So we're talking about, on the right-hand side, when you see "nozzle," that's actually integral with the reactor vessel. Then on the left-hand side you see safe end; that is the pipe that, obviously, connects to that nozzle.

And what's used to connect that is dissimilar-metal weld, which I labeled DMW in the center. The safe end is stainless steel; the carbon steel nozzle is on the right, and then in the middle

we have alloy 182.

And when the sites first started using this particular alloy, they weren't really that concerned with IGSCC at the time. Although it was an understood mechanism, it wasn't the driving force for what they chose alloy-wise, and frankly there weren't other alloys that were better at the time. So we're going all the way back to the '60s and '70s, obviously, when we're dealing with this.

So as I said, in 1988 they found a crack, which is now illustrated in there. The crack exceeded the ASME code standard, so, like any site, they said, well, what are our options? And they chose to install a weld overlay.

Now, one of the keys that you're going to see here is that the weld overlay only goes to the edge of the alloy 182 portion; it does not go on to the ferritic carbon steel nozzle.

The reason for that was because at the time, as I said, in 1988, they didn't have the methodology to be able to apply a weld to that carbon steel nozzle and maintain the heat control necessary without affecting the mechanical properties of that carbon steel nozzle.

So along comes 1993, and that technology becomes available. However, the site -- that would have been kind of a situation where they didn't need to; this was an adequate thing that they had done, installed in 1988, so they left it as is.

There were other nozzles at that site where this similar issue has occurred, and since 1993 they have installed many full structural weld overlays, so since that has been available to them, they have utilized that.

Now, going into 2016, as you can see, the crack has grown into the overlay. So the licensee found this, and they installed, as I said, a full structural weld overlay.

Now, I said I would detail the difference between a weld overlay and a full structural weld overlay. The intent of the weld overlay was a leak barrier, meaning hopefully it would provide a little bit of mitigation by the heat input into and the compressive stresses and so on that were involved in the dissimilar-metal weld, but it was never intended to be a structural replacement for the underlying pipe.

That's the difference between a full

structural weld overlay. The full structural weld overlay literally replaces the design factor of the piping underneath it.

So with that, I said that my education background was in metallurgy, and I actually did my thesis on nickel-based alloys. That said, it's been 10 years, so forgive me. I'll try and answer whatever questions you have beyond this, but this is a little bit of detail.

These are some compositions from the ASME code. These are the allowable limitations on the compositions, and really what I'm trying to illustrate here is that chromium is the big player in this.

In order to prevent IGSCC, there are some major factors, one of which is the depletion of chromium in the grains at the grain boundary, if that depletes that chromium to form carbides in the grain boundary itself, it leaves the grains themselves susceptible to the mechanism of IGSCC.

So one of the mechanisms to offset that is to just increase the chrome. So even if you steal some chrome, there's still plenty left in the grain itself; you don't have such susceptibility.

As you can see on the left, alloy 182 is

what they used for the dissimilar-metal weld, and that had relatively less chrome. The improvement -- alloy 82 was what they installed for the weld overlay, the leak barrier, that has a little bit more chrome, but as you can see on the alloy 52, which is now what's acceptable for the full structural weld overlay, they've significantly increased the percentage of chrome.

There is a whole discussion of why all of the other elements, and for those of who know about alloying, it is incredibly complex, all of the things that go into this; what you can add and what effect it has and how much of this you add and so on. So, again, if you have questions about that, we can go over it, but that was what I intended with this slide.

I apologize for this slide up front. I used to go to conferences all the time, and I hate slides like this, because what people typically do is stand up here and read them to you. I'm not going to do that. I'm going to allow you a minute to read it, and then I'll talk about it.

(Pause.)

MR. COLLINS: This is really awesome. This might be the most silent I've ever heard a room with

the NRC.

So what I wanted to point out are a few different things about this slide, one of which was this is -- I chose two documents that were written by international bodies, and the reason I chose that was to illustrate that this is a globally known and understood issue.

And when I say "understood," there's a limitation on that, and this also illustrates that. At the top it talks about the fact that the IGSCC problem has not been fully solved and is still a concern for BWR components. That was in 2011. That statement still exists today. So we are obviously still dealing with the science behind this.

On the bottom it talks about the NRC saying, well, even though we recognize that IGSCC can be created in a lab in alloy 82, this is kind of the best option for resistance to that particular mechanism.

So now that's where the breaking news part is. Maybe we need a better option. Well, the alloy 52 is certainly available, but the implications on a crack that may have grown into the alloy 82 material is certainly something that people are champing at the bit to say, well, what are the issues at other sites

and so on.

So what we're doing right now is, as I said, we're still addressing the site issue. We're finishing assessing the site's actions and identifying any performance deficiencies, at which point we will obviously issue the inspection report.

And literally the minute that that's done, I am calling my colleague at headquarters and say, Ready, go. And that ready, go is going to be to assess the potential -- whether this actually was the first instance. We need to confirm some of the data that's been found; make sure that this is actually the first instance of that. And then if we do, evaluate possible implications on other plants.

This site will have to do an extent of condition through their actions, but we want to know, sort of along the lines of the Part 21, well, how will this affect other sites.

And then whatever we find, we're going to engage the industry to make sure that the information is communicated and that the recommendations/new requirements are made obvious.

MR. SKILLMAN: Brendan, let me ask this: How do you and we know that this crack through that

182 weld material is solely the result of the intergranular stress corrosion cracking and not a phenomenon that is occasioned by that design of that nozzle on that reactor vessel that simply has a stress riser at that location?

MR. COLLINS: We don't. That is one of the things that we will have to effort when we are doing the follow-up.

What we're doing right now is assessing the site's actions. The science project that remains is to answer exactly those types of questions. How do we know this is IGSCC? Well, we're going to have to make use of the best data that we have available, and there are some limitations because of what -- actually the process that happened at the site.

But what we are going to do is look back at prior UT exams to get a better feel of, well, how long did this exist. Were there any events at certain point that may have exacerbated; obviously the earthquake scenario is in our minds, and things like that. We plan on evaluating all of those.

MR. SKILLMAN: I want to pause. We do have Dr. Ballinger, who is an international expert on this kind of stuff.

Ron, any comment you might make? Any question?

DR. BALLINGER: 82 and 182 crack in the lab all the time, so 52 if the replacement, and nobody's going to use 82 or 182 anymore ever.

So this -- and the full structural overlay solves the problem. The whole thing is in compression anyway.

MR. COLLINS: The real issue that we have, and this is where it's really important to talk about what's going on at the other sites, is to find out whether any of the other sites are still implementing the approved actions from 1988.

DR. BALLINGER: And back in the '80s, back in the dim, dark past, doing UT on welds was a very difficult thing to do. About the only thing they could do was X-ray the things, see if they had gross defects.

MR. COLLINS: Even so much -- you bring up a great point, and that's not only has the technology improved, but our knowledge of how to utilize that technology and our knowledge of the results and being able to look at the results and discern more information, that's actually been something during

this process that has come to light.

DR. BALLINGER: It's interesting. I don't think the Europeans actually allow full structural overlay. They'll allow inlay weld, but not a full structural overlay. I could never figure out why that was.

MR. COLLINS: You're talking to the wrong guy. I wondered why we didn't just replace the things to begin with. I had an entire -- extensive conversation with Rudy Burnhart, for those who know him, about that topic.

DR. BALLINGER: But 52 and 152, which is other material for -- depending on whether it's covered electrode or not -- covered electrode; that's the difference. Those are much more difficult weld materials to actually do right. It's much easier -- 82 and 182 are much easier to use. So you have to be much more careful.

DR. MARCH-LEUBA: This is a situation for piping. Have you characterized it for vibrations? Could there be excessive vibrations on the pipe?

MR. COLLINS: Maybe. We have not done that yet. That would go along with what Mr. Skillman said about the aspects of the science that we need to --

DR. MARCH-LEUBA: I mean, you need to get a measure.

MR. COLLINS: Absolutely.

DR. MARCH-LEUBA: And is there any fluence? I mean, this is close to the vessel, so nuclear-induced damage?

MR. COLLINS: The second of the international documents that I pulled out earlier, that actually addresses the fluence issue, so I'm quite certain that even a cursory review of any of the industry documentation out there will lead us in that direction.

DR. MARCH-LEUBA: Okay.

MR. RAY: How big a -- what amount of the arc of the full circle is involved here?

MR. COLLINS: Thank you for asking that question. One of the things that this can't illustrate, because it's not a 3D drawing, is this particular flaw was axial in nature, rather than circumferential. It is possible that it could be circumferential, but this was on the order of -- I want to say at the surface it was on the order of about a half an inch, and I think the major dimension would have been about three inches in the actual

direction.

MR. SKILLMAN: But that suggests a hoop-stress issue.

MR. RAY: Yeah, right.

MR. COLLINS: That may have been the stress that was at play in the IGSCC issue, but they are confident that it was an IGSCC issue to begin with.

Again, one of the things that we're going to have to assess is was it IGSCC that continued to propagate or was it that combined with another mechanism? These are all definitely questions that we'll try --

MR. SKILLMAN: Being the skeptic that I am, why should I be comfortable that a full structural weld overlay of type 52 material is going to solve the problem? Why won't that crack just find its way right to the surface on that overlay?

MR. COLLINS: I think the way that I would approach the answer to that question is the way that they probably approached it originally, which is to say, well, we think alloy 82, based on lab results and so on, is resistant to that, and if nothing else, it will provide a slowdown mechanism to prevent that from occurring.

So what we know is that it's better than what's there now. I don't know that in metallurgy there's ever a perfect answer; we continue to strive for a better answer until we find something that is perfectly resistant.

But for now that's what I think I would tell people: We have done studies on the allow 52; it is significantly more resistant than the other two alloys in question, and we feel that it's an appropriate option.

MR. SKILLMAN: Seems to me that this might also introduce another line of questioning when we begin to deliberate on issues of subsequent life renewal for where plants have actually used a full structural weld overlay and where there were underlying flaws that were remediated by that overlay. How long will these last --

MR. COLLINS: I definitely agree.

MR. SKILLMAN: -- if we're going to run from 60 to 80 years on some of these plants.

MR. COLLINS: One of the ironies here, if you want to call it that, is that our branch, that's one of the things that we inspect, is the license renewal aspect, so I'm quite sure that we will have

that dialogue with headquarters about the -- not only the implications for plants now but into the subsequent license renewal period.

MR. SKILLMAN: Thank you.

DR. BALLINGER: These full structural overlays put the pipe in heavy compression, so they eliminate one leg of the stress --

MR. SKILLMAN: Of the hoop.

DR. BALLINGER: -- issue. It's compressive stress, and you don't grow cracks.

MR. RAY: I's compressive radially or longitudinally? In other words, is it compressing the pipe in resistance to the pressure or to --

DR. BALLINGER: In both.

MR. RAY: Both.

DR. BALLINGER: Because it's a solidification issue when they do the weld.

MR. RAY: Yeah. No, I didn't understand how it arises, but I didn't know if it was --

MR. SKILLMAN: In both axes.

MR. RAY: -- credited both directions.

DR. BALLINGER: And, again, and axial crack will eventually run out of gas, so to speak, because it runs into different material, and it runs out of

residual stress associated with the weld. A circumferential crack is a little different; it's much worse.

MR. COLLINS: Not only from that aspect but also from the significance aspect of being able to have a lot more water on the floor, so to speak.

MR. SKILLMAN: Brendan, thank you very much.

Colleagues, any more questions for Brendan, please?

(No response.)

MR. SKILLMAN: If none, sir, thank you.

MR. COLLINS: Thank you.

MR. SKILLMAN: Okay. Next we have Rodney, please.

MS. HANEY: We need to replace our speaker, and Scott Shaeffer is actually going to do the presentation.

MR. SKILLMAN: Okay. Scott, welcome to you.

MR. SHAEFFER: I'm Scott Shaeffer. I'm a branch chief here at Region II. I have three functional areas. There'll all mutually exclusive, and it is cybersecurity, fire protection, and target set.

MR. SKILLMAN: And what?

MR. SHAEFFER: Target set review.

MR. SKILLMAN: Okay. We found ourselves abiding in a very clear target set yesterday morning.

MR. SHAEFFER: Oh, really.

MR. SKILLMAN: Yes, sir.

MR. SHAEFFER: We try not to talk to those public meetings. It keeps me safe.

MR. SKILLMAN: Well, we knew what we were looking at.

MR. SHAEFFER: Just a little background: mechanical engineering by trade. I worked for the NRC for 33 years; about 13 of that was out in the field, resident inspector, senior resident inspector. I've been a branch chief for the rest of the time.

So I'll go to the next slide. Topics I want to talk about, and I apologize in advance. I don't know how familiar you are with cyber security and then the words we use to describe that, so I'm going to go through that a little bit, because it is pertinent to how we're going through the program.

What we'll touch on is the security aspect. We'll go through the guidance documents that we use, and I hope to give you an update on what we've done so far in our milestones 1 through 7 inspections and our

future milestone 8 and describe what those are, and go through some other subjects on some recent reporting requirement rules that we've put in place and some other topics.

So the limitations for this discussion: Just right off the bat, since this is a public meeting, most cyber security reports and other information are security related, so I'm not going to be able to get into details about inspection findings, characterization of those, but I'll do my best to give you a general discussion on it.

If any of you have specific questions, I'll be happy to come over to your lunch. I like free lunches.

Unique cyber security language: So I want to give you just a couple of little definitions here so you know where and why we're talking about some things.

First of all, just kind of what is cyber security to folks? It varies. Some folks have an idea that a digital device is something that you can slap an antivirus and walk away from it; it will be done. Others, they might think of cyber security as it's a dark night and it's full of terrors, and you

just can't address it. So you look at it in different respects.

We are looking at cyber security under the cyber security rule in an analytic manner. We're taking each digital device, seeing what threat vectors, what things can attack that digital device, and apply different controls to that. And there's 140 different controls, and there can be thousands of CDAs, digital devices, within the plant.

One thing I want to point out the term critical digital asset, that term would describe any digital device that's in the plant that could possibly affect a core function or a very, very small function, trip a condensate pump or something to that effect, or even smaller than that.

The term "critical" is kind of -- I don't like the term. It implies an importance that's probably not there, just the term "critical." It's a distinguishing feature that I don't think we describe it very well.

And when we're distinguishing between important ones and not-important ones, we did have a distinguishing feature of target sets. Since this program was founded in NSIR security organization,

these target sets describe what's important. It could be safety related. There's another term, SSEP, which is safety, security, and EP functions. That's probably the closest thing we want to have because envelops both safety related and non-safety related things that could be digital and impact the plant.

So milestones is the last thing I want to just talk about here. We broke the program up into two distinguishing implementation features. Milestones 1 through 7 cover what they call the target set CDAs; they're the important critical digital assets, things that can possibly impact the core functions; impact the ECCS function. Those would be things that we would deem as target set CDAs.

All the other CDAs are going to be looked at in depth in milestone 8, so that's kind of the distinguishing feature; milestone 8 things are things that can impact the plan. If you trip the plant by attacking a CDA, that would be looked at mostly in milestone 8.

Getting into the history, 2002, -3, that was when this was first looked at as far as a threat order. 2005 there was an iteration there where licensees were trying to get a voluntary program up.

We went through that and did a rule in 2009. So you're probably very familiar with that.

In 2010 we started publishing what we want in terms of a program to look like, so that was the initial guidance, so that's one of bibles, Reg Guide 5.71.

20112, December 31, that was when the implementation of the milestones 1 through 7 had to be done by the licensees. So that was relatively thrust upon them in a three-year to define -- do all the reviews to figure out what their target set critical digital assets would be and put the controls in for those important key assets.

2014 to -15, basically in that time frame, really from 2012, you have thousands of CDAs, and you have 140 controls to assess. It's coming up with a commonality of how and what are effective controls is a big challenge. There's lots of ways you could do things, lots of ways could be adequate to protect CDAs.

We have put out NEI 13-10 in four revisions now; probably is going to a fifth one coming out. And those are meant to define what's going to be acceptable. So when we go out and we do our reviews

of milestone 8, we'll have something to point out, and we could say for Fisher controllers, if you do these things, that's what adequate protection for those CDAs look like, for example.

And we did -- last note, December 2015, we completed all of our initial cyber inspections at all the Part 50 plants for milestones 1 through 7, and while I can't give you specifics of inspection findings, there were inspection findings that I would characterize it as they were expected in the areas they were; the numbers of CDAs that they identified were expected to us. Were there some issues here and there? Yes. But in general the utilities stepped up and did what they had to do for that first initial deadline that they made.

MR. SKILLMAN: What -- without going into any specifics, what does that conclusion -- you basically said non real surprises, so may some unique details among different plants. What does that tell us about the robustness of what was the Part 50 licensing process?

MR. SHAEFFER: I would -- let me see if this answers your question. What I take from it, or what we took from this was it confirmed that the number of

digital assets that could grossly impact the plant were small, in general.

And what I'm going to get to later, we have -- we touched on the Part 52 licenses; that could be a totally different story.

MR. SKILLMAN: That's what I was thinking. That's exactly what was going through my mind.

MR. SHAEFFER: So it confirmed, at least for me, that the key threats are of a smaller nature, and then there's lots of other digital assets that can impact operations.

The trick, to me, is not negating looking at those things that can just impact the small amount of operation or something, because those things can also be pathways to get in to a system. If you have an open port on something and it's connected to a LAN, you can take it in in other places.

So that's the program -- even though we talk about milestone 8 might be things that aren't as significant as milestones 1 through 7 issues, they're important because they can be a pathway, so we can't negate that. And an adversary insider can use those things.

That answer your question?

MR. SKILLMAN: Yeah. It could also be representative of the, if you will, relatively sparse application of digital on some of the old plants, some of whom have held very tightly to some of their old analog equipment that is immune to the cyber security threat.

But as time goes on, we're seeing more of the older plants upgrade to digital assets that now need the protection that is incumbent upon the Part 52 with the digital systems to provide.

So it just could be that these are moldy oldies and they're hanging on to some of that old technology, and as a consequence, they are not as vulnerable.

MR. SHAEFFER: I guess through our 1 through 7 inspections we came across -- not at all plants, but each plant would have a unique feedwater upgrade or something like that --

MR. SKILLMAN: Right.

MR. SHAEFFER: -- and we'd have to incorporate that into our reviews as we would a brand-new plant, because they have lots of digital.

MR. SKILLMAN: Okay. Thank you.

MR. SHAEFFER: All right. So just a

refresher on the guidance documents we have. I mentioned 5.71 is really what we want utilities programs to look like in the cyber security world. NEI 08-09, lots of revisions, but effectively it's you must have a cyber security plan; it's part of their license. That's how we regulate through that.

They don't like to change it a lot right now, because we're in the initial phases, so I think we're doing a lot of documentation of the guidance in the next one, the NEI 13-10, and, again, that's Cyber Security Assessments; it's figuring out what controls should be applied to what kind of critical digital assets.

And the big play going on here is licensees are struggling to get through this in that they have to -- if they want to be efficient at doing it, they don't have it -- okay, here's a Fisher controller, here's the threat vectors, here's the controls -- and have questions on that. They want to have a firm, this is going to be acceptable if we go and implement this mod -- this type of mod, this type of control, where in the other controls they've assessed them and they've considered them -- they really don't feel like they need much more.

If you have it locked in a box, it's in the middle of the control room, yes, it's digital, but you have other controls: physical and technical controls on it. Maybe you don't need some of these other more elaborate, expensive ones that you don't have to implement.

Reg Guide 5.71, a couple of things I just want to point out here is just how they approach it. Along the left side, you form a cyber security team, and this is not just a couple of engineers meeting in a room. It's a dedicated team that knows cyber security; they have technical competence in that group, and they also have management's buy-in that they're going to support what this team comes up with.

Then they have to go through and identify all their critical digital assets, figure out how they want to proceed in applying controls. This defensive architecture is a graded approach. Just in general, you know, you could have -- along the bottom there's five levels that we generally have them put their architecture in. To the right side you can see how the business LANs, they might be very well protected by firewalls, but while a firewall might be allowed in the level 4 of level 3, that's not necessarily the

best level of protection. You want things behind a data diode, much better protection. Firewalls in general can be hacked. There's just -- they're not that great a protection.

Some of the controls are to prevent movement of information between levels and things like that. These are the kind of levels they're talking about, just where -- so they'll identify their critical digital assets, see what level they're appropriate to be in. Some sites we might be challenging the licensee on, wouldn't that be better suited if you upgraded those to level 4, for example, because we look at the controls that they have at that time between 3 and 4, and we point out these differences or vulnerabilities.

DR. MARCH-LEUBA: Whose responsibility is it to define those critical assets?

MR. SHAEFFER: Who?

DR. MARCH-LEUBA: Who is responsible for the final -- and let me go what I'm thinking from. You think of your email system, your LAN, it's basically known that there can be a cable coming from China. There are many more malware vectors out there. Everybody has the LAN, but then you could have the USB

device now everybody's going to focus on, but then there are the CDs that you get at the conferences and everybody brings them back to the office.

And you've found malware vectors inside hard drives, in hidden sectors, where the manufacturer installs in there. And these complex programmable devices we were talking about this morning, you can hide malware in there, and nobody would ever think of looking inside a relay to see if this was hardware was needed.

MR. SHAEFFER: There are many, many things. I deal with the contractors a lot, and in their -- on the front line of hearing all the new things that come up that are potential challenges.

I mean, if -- what's the common one that folks laugh about, the vapor cigarettes. If you charge your vapor cigarette on your computer, that USB hookup, you could give yourself a virus by charging your cigarette.

Sometimes we laugh at those things, but they are delivery pathways, and sometimes there are simple controls that can be put in place to cover those.

But that's why this -- this is going to be something that you have to stay on top of. It's not a

one-time endeavor. The threat vectors are going to continue to change, and they have to recognize these, so it has to be a living, breathing program. This is not a project.

DR. MARCH-LEUBA: I was extremely concerned this week about this 30 percent reduction in cost. Unless we the inspectors are on top of them and telling them no cap on this part, we need to keep on reinforcing on that, because nobody's going to look inside a relay for a virus.

MR. SHAEFFER: I'll say this. I gave a little talk at the NITSL presentation last week, and during that presentation the utilities up there, and they are talking about reliability, so they're talking about the reliability. That is in step with what the cyber rule is about as well, because they don't want a cyber vulnerability to take down the unit for reliability purposes.

It's exactly what we don't want, either. We don't want that impact on the plant. Really we're in sync with having the same ultimate goal. Different pathways but -- so I do believe that they are conscious of this. They do not want this to happen, or any consequence.

It could be a very small consequence, but if it's outside, it could have a grave impact. I'm sure you're all -- you've heard about the two German plants that have -- they shut down because they found something in one of their support systems. And just because it was there and they didn't know where else it could be, they shut down those two units.

And the question I get in the U.S., would we be prepared to do that, too? And we haven't been challenged like that, but I think that's something we attend to.

So hopefully these programs are going to put in place things that will make us think those through, and we'll come up with a logical, reputable solution there.

DR. BLEY: Scott?

MR. SHAEFFER: Yes, sir.

DR. BLEY: When you look at the kind of diagram you had up there, we see the levels, and we've looked at these plans, some of them, and certainly in this area.

Where in the cyber program -- and you've been reviewing -- inspecting the programs at this point. Right? Do you look at the supply chain? You

know, it's what you were getting at earlier. The supply chain feeding things that go down to level 4 or level 3, because that's not something directly in the network, that's something you're bringing in in the new reactors.

So we were looking at the commercial dedication stuff this morning. Do the commercial dedication facilities have the capability to even look for these kind of problems?

MR. SHAEFFER: The program's set up that predominant in milestone 8 is where we're going to look at a lot of the supply chain controls.

Remember where we started, though. We started with a rule imposed on the utilities. They all had their digital assets there; they could have been -- who knows where they were made. Who knows whose hands were on them.

They could have what they call, you know, a time bomb set up in them, that someday they'll go off and they won't function, that controller won't work.

So, yes, we need to look at supply chain in general. It's what we're going to focus on during the milestone 8; that's what the licensees are doing right now. It's an ongoing question when it comes to the new

reactors. A lot of those new reactors have components that are parked already at the site in a warehouse.

So the question is -- I think utilities would like to say we can develop kiosks and testing things that can identify malware. We're questioning whether they can adequately do that or not.

DR. BLEY: Okay.

MR. SHAEFFER: One of the biggest examples just recently is if you have a USB you have both hardware and software on those things. It was long thought that you could take your USB, and if you have picked up something corrupt on it, you stick it in a kiosk and scan it. If you get the green light, you're okay to go.

The hardware side of that could be corrupt, and that scan will not pick up that, and it's embedded in code, and you can't -- it's difficult to find.

DR. MARCH-LEUBA: Antivirus won't catch any of these viruses. We have these specific one-of-a-kind that will never be catch by McAfee. It will be catch --

MR. SHAEFFER: The technology is out there. People can do that if they wanted to.

MR. RAY: Well, laypeople like me think

about an air gap as being the solution, but that's not.

MR. SHAEFFER: It's difficult. You have to rely on people. You have to rely on portable media controls. There's -- if you remember how Stutznet got in, they basically put it on a USB and made it attractive for people to pick that up: Here's a free one. And then inevitably someone plugged it in.

DR. MARCH-LEUBA: Most classified systems, what you use is a heat gun and glue in all their USB ports to make sure nobody can put in a stick.

MR. SCOTT: Right. Those are part -- that is a control; that's one of the 144 controls that they can assess.

DR. MARCH-LEUBA: One other thing, when you're not expecting it, there is no USB port to put it in, no matter how much they want it.

MR. SKILLMAN: Scott, this is fascinating. I'm going to ask you to pick up the pace.

MR. SHAEFFER: Okay. So milestones, we talked through a lot of these. We've done inspections for milestones 1 through 7. We do have some outstanding I'll call them generic issues that we're working with NEI and bringing together solutions for

what those controls for those specific things should be.

There's only a handful; there's not a lot of those. And we're going to produce a -- we're going to an audit of the corrective actions for the initial findings coming up here in '16 and '17; we're going to do those at all sites.

So we're kind of in a little hiatus here. Milestones 1 through 7 took a long time. We're going to get through the PI&R aspect of it and then full implementation inspections begin sometime in the middle of 2017.

I'm not going to go through this. These are just the basic requirements expected of you: identify your assets; defense-in-depth technologies; train people; incorporate as far as your physical security plan. That's where the CSP's going to live.

Milestone activities again; it's going to be full implementation controls on all the CDAs. I like to say a CDA is like a valve. There's an important valve at the plant, sump valve; there's valves that are not important. So it's going to be for all those.

And against, to look at the least common denominator, you're basically trying to block the

attack pathways. And these are some of the other things. There's your supply chain that comes in in milestone 8.

Two last things: ongoing evaluation of management of cyber risk. That's what the licensees are -- I'd say if the last two things are things that they're really thinking hard on how to do that, how do we evaluate our cyber risk on an ongoing basis? Every day there are reports of new viruses and new things. How are they going to incorporate that into the programs? They scan their things and say it is susceptible to it or not.

And then effectiveness reviews, we had a lot of discussion on that two weeks ago. What can we do to make sure; it's kind of a QA look. How much QA is necessary in a cyber world is what that's trying to answer.

So coming up we are prepping a lot for these milestone 8s. We're having many tabletops with the utilities to try to come up with this guidance so that we don't get into the middle of the inspection and have deep discussions about what are adequate controls for certain things. That is the bulk of our material that we have to go through.

So we have thousands of CDAs in milestone 8 and 140 controls to assess in each one; we try to make that more efficient.

Training our inspectors: TTC put together a very good two-week course to give us a primer and keep us to speed, and it will probably work into a recurring training. Like I said, we're starting the milestone 8 inspections in July 2017.

Really briefly, cyber reporting requirements came into effect in May of 2016. There's the Reg Guides and the guidance that it covered, but in general you have some -- you can read the one-hour notifications. If you impact a safety and security EP function with a cyber issue, these are the notifications for one-hour, and you have four-, eight-, and 24-hour reportables.

So the licensees are on notice to do these things now. We have been for the past two years, if the plant hiccups, and there's anything digital, we ask, could this be cyber related, and we go through and hear that answer. Perhaps one of you might have asked those questions, too.

MR. SKILLMAN: Is the reporting consistent with Parts 72 and 73?

MR. SHAEFFER: It mirrors it. That was an intention. And we're going after thresholds here. We don't want to overreport, we don't want to underreport.

The NRC has its own internal monitoring of cyber threats. I don't know if you guys have ever been exposed to that, but there's a group in NSIR that does just that, and there's a weekly output report that I get that talks about what's going out there on industry. We're looking for key things that we might want to flag to the utilities quick, to say, look for this. So that is going on.

MR. SKILLMAN: Thank you.

MR. SHAEFFER: All right. Almost done. Staff's evaluating for decommissioning units and ISFSIs. If you have this cyber full implementation go into effect later the next couple of years, what does that mean for a plant that's shutting down?

The utilities are going to want to probably not implement all the controls or come up with some kind of a variation, but right now we have the requirement, so we have to get through that hurdle.

New reactors, again, they're the same requirements as Part 50. They have difference in CDA

profiles, systems, and numbers. System architecture is going to be different. To get your early report point, Gordon, the new Part 52s might have all their digital stuff in a box. Maybe they'll be a little better gapped, in that respect, and then you can bury what controls you have on them. If they're going to have more, then it might be easier to protect; that is to be determined still. Basically the last slide, we have to update all the other reg guides now that cyber's included.

Fuel cycle, the Commission approved high-level rulemaking. Rulemaking's graded -- this is kind of key -- graded based on consequence of concern for the facility type. They couldn't find a one-size-fits-all, so that's how we're going to propose the rulemaking there.

DR. BLEY: When are you going to start looking at the Part 52 plans, and when do they have to comply?

MR. SHAEFFER: We've -- they have a license already.

DR. BLEY: They do, but they don't have a plan.

MR. SHAEFFER: So in general, when they get

their plan, when they get fuel, is when they'll be accountable.

DR. BLEY: Before fuel load --

MR. SHAEFFER: But before fuel load we have to do an awful lot to verify they have a program, they're protecting the CDAs, because that's -- but they do already have that license.

DR. BLEY: Okay.

MR. SHAEFFER: And there are just the targets for 2018 for the fuel cycle cyber security.

MR. SKILLMAN: Scott, let me ask this. While we think of design control Criterion III to Appendix B of 10 CFR 50, when we think of the procurement role, the gentleman spoke about the relay and the daughterboard on the motherboard, which was really -- modification of a component was expected and intended to perform in a certain function, is the current body of regulation, Part 50, Appendix B, plus the procurement role adequate for the cyber security challenge, or is there something else that is needed?

For instance, we use the term quality assurance. We've all become comfortable with that term, but it has a connotation of, if you will, making sure the thing does what it's supposed to do.

But in this particular environment, it is beyond having the device perform as intended. It is a philosophy of understanding what is in that gizmo so that it doesn't surprise you.

It's not a relay that closes when it's given voltage and current. It is actually a device that can have a latent timer that can surprise you. So it's almost a variation on this issue of quality assurance.

So my question is, is the regulation adequate, or is there something else needed, particularly when it comes to digital assets?

MR. SHAEFFER: I don't think anything else is needed, in that the cyber rule incorporates the cyber security plans, and within that is the requirement for the quality assurance aspect of it.

And the design control is going to be part of the procurement process, it's going to be putting in place the various cyber controls for the digital aspect of that design.

So that's what hasn't been required before this, so if we go in and we look at a design and they don't have proper controls, they're in violation of their cyber security plan right there; we don't have to go any further with that.

MR. SKILLMAN: You're saying that the issue that I was raising has already been addressed deep within the text of the cyber rules.

MR. SHAEFFER: And it does keep popping up. We have a lot of good QA inspectors, and they keep coming down the QA mark, but we don't really have to go there; we already have it right in front of us, ready to go. They have to do this.

MR. SKILLMAN: Okay. Thank you.

MR. SHAEFFER: And I won't go through all these, but what does cyber security implementation mean? It depends. It's going to depend on what CDAs they have and what particular controls -- sets of controls they come up with.

So it's going to vary a little bit. A running cyber security program, it's got -- you just recognize that your attack vectors are going to change. They have to have it all the time and anticipate what other things are coming at them and from what different attack vectors.

And the last thing is the sites have to be reminded, and we have to encourage this, that it's a role of everyone to recognize and protect their cyber security now. They're training their guards to look

around. Why is that computer hooked up and going into that cabin? And if it's not part of a work order, they should be questioning it.

The operator's doing the same thing. They're going to do their 5059 reviews for modifications that cyber has to be a piece of that now. Are they introducing something else that's going to give them a vulnerability?

So it's a program, not a project.

If you have any specific questions about what we were finding on inspections, we can do that offline.

DR. CHU: Do you have enough resource to do all this? And, you know, with the technology advancing so fast outside, so my real questions: Do you have the right resource to tackle this important task?

MR. SHAEFFER: We're approaching the inspections with inspectors and contractors, and we're getting some consistency by having a lot of folks at headquarters come to those inspections.

Licensees have been very kind in allowing us to bring a lot of people, and I think the answer is, yes. I think these early first couple of years we

definitely need the contractors, because they are more in tune with the threat vectors that can attack things.

And we have inspectors that are becoming up to speed. I think our challenge is to keep a set of inspectors that are very cognizant of these things together and not perhaps go on to other areas. We need some specialized -- like centralizing things could probably help in that area, but we'll see where this goes after we get through the initial implementation.

DR. MARCH-LEUBA: And in your experience do the plants have enough staff resources to handle it?

MR. SHAEFFER: I would say overall, yes. It varies, depending on whether they're approaching this from a corporate or a site level.

Those that do with the corporate I'm more impressed with, because they gain the consistency, and if I go to one site and I see these issues, when I go to the next site under that corporate umbrella, they already know about those issues, and they fixed them already.

MR. SKILLMAN: Scott, thank you.

Colleagues, any further questions for Scott?

(No response.)

MR. SKILLMAN: Okay. Everybody listen up. We're going to take a one-minute recess.

(A brief recess was taken.)

MR. SKILLMAN: Ladies and gentlemen, we are back in session, and we have Jeremy Munson.

Jeremy, it's yours.

MR. MUNSON: Thank you.

MR. SKILLMAN: Yes, sir.

MR. MUNSON: My name is Jeremy Munson; I'm with the Division of Fuel Facility Inspection here in Region II. I'm a fuel facility inspector specialized in nuclear criticality safety.

Today I wanted to give you an update on the Natural Phenomena Hazards Generic Letter, and Temporary Instruction that is currently ongoing for fuel facilities.

Just a little bit of background. Everyone is aware of the earthquake and tsunami that occurred in Japan in 2011. This sent a shockwave through the industry, obviously, and included in that were our fuel facilities here in the United States under our NRC regulation.

We issued an Information Notice in 2011 to

notify licensees of the impact of the earthquakes in Japan and to pass on our expectations that they assess their own facilities for potential vulnerabilities.

A Temporary Instruction was issued to confirm compliance with 10 CFR Part 70 Subpart H in 2012, and we did inspections around that time to look at just that. The inspections identified that there were some issues. Unresolved items were opened, and later a Generic Letter was issued in 2015 for the licensees to look at their facilities and make any needed upgrades in order to restore compliance with that section of the regulation.

In addition to that, an Interim Staff Guidance was issued in 2015. Some of the potential safety concerns that were identified in the initial TI were the age of the facilities. Some facilities have buildings that are very old; some were built to old building codes.

Some of them didn't specifically address NPH requirements in terms of initiating events or accident sequences. There was a noted lack of documented bases for some of the analyses.

For the Part 70 facilities they're expected to perform an integrated safety analysis which

identifies anything that could lead to intermediate- or high-consequence events and either prevent or mitigate them, depending on the nature of the accident sequence.

A lot of NPH-related accident sequences were screened out without any sort of justification. Just for example --

MR. SKILLMAN: Jeremy, just for the record, NPH is natural physical hazard?

MR. MUNSON: Natural phenomena hazards.

MR. SKILLMAN: Natural phenomena. Thank you.

MR. MUNSON: So we're talking -- I'll talk a little bit more about this, but in general we're talking about earthquakes, flooding, tornadoes, possibly hurricanes, things of that nature.

Some of the code requirements that the buildings were built to also have changed. So the purpose of the Generic Letter was to request information from licensees to verify that they were in compliance, specifically with the natural phenomena hazards aspect as it applies to Subpart H of 10 CFR Part 70.

And we wanted to verify -- wanted the

licensees to verify that their ISA addressed the natural phenomena hazards events. The regulatory basis for this is built within 10 CFR Part 70 Section 70.62(c)(1), which essentially -- and I'm paraphrasing here, but it essentially requires licensees to conduct and maintain an integrated safety analysis which identifies potential accident sequences. Does that make sense?

MR. SKILLMAN: Uh-huh.

MR. MUNSON: Okay. So to get back to your earlier question, these are some of the type of NPH events you might expect to see: seismic, which would be an earthquake; flooding; high winds, tornadoes; excessive precipitation; lightning strikes; fires; meteorites; volcanoes; tsunamis; rapid erosion, sinkholes. In essence, it very well could include beyond-design-basis sort of initiating events.

So now I'd like to talk about the current status. If you remember, on the previous slide, on the background slide, we performed an initial TI which identified that some of the plants did have issues, and we issued unresolved items in the inspection reports for that TI.

They have been open ever since then, and we

now have a Temporary Instruction to go and inspect these facilities, based on their responses to the Generic Letter, and verify that they are in fact in compliance.

So in response to -- with regard to the Generic Letter, we received responses from all of our fuel facility licensees. We are still conducting site visits, technical evaluations, and we have recently begun the actual new TI inspections. We've only performed one, and it was the week before last.

DR. BLEY: Jeremy, just a question.

MR. MUNSON: Yes, sir.

DR. BLEY: When you have temporary instructions, are those truly temporary and they're going to go away, or are those things that eventually will get written into the inspection manual?

MR. MUNSON: My understanding is that the basis for this is already within the regulation, 10 CFR Part 70, and that the licensees essentially should have been doing thing for a very long time.

We haven't necessarily been focused on it. It's now been brought to our attention to pay more attention to it. The temporary instruction is to specifically evaluate natural phenomena hazards;

however, our current core inspection program from here on out should accommodate that.

Does that answer your question?

DR. BLEY: So it should get updated to include this.

MR. MUNSON: Correct. Because we perform operations inspections, we perform criticality safety inspections, all sorts of inspections that are related to the integrated safety analysis, and it gets inspected at length.

DR. BLEY: Okay.

MR. MUNSON: Okay. So talking about the site visits, we've performed the site visits at Westinghouse, Nuclear Fuel Services, Babcock & Wilcox or BWX Technologies they're called now. There has not been a site visit yet performed at Global Nuclear Fuels, and we do not plan to perform site visits at Honeywell, MOX, Urenco, or Areva.

Now, the reason for that is because in the original TI, a lot of needed upgrades were identified for Honeywell, and they actually went into a voluntary shutdown, and they fixed a lot of these issues. A lot of them were structural: The building's going to fall down if you have an earthquake.

MOX is -- but also they have higher quality assurance standards than some of these other facilities. They will be a new facility if they're ever actually completed, and they will have the NPH hazards directly incorporated into their design basis, whereas some of these older facilities didn't.

Sort of the same thing with Urenco, the gas centrifuge enrichment facility out in New Mexico: a newer facility. They've for the most part accommodated these sorts of things already. And Areva we are going to perform an inspection, but we're not going to do a site visit.

Now, in terms of the new TI, as I said before, we've completed one, and it was at Westinghouse, just a couple of weeks ago. We have Areva scheduled for the end of August, and we are still waiting to schedule all the other sites.

A lot of that -- some of that has to do with the fact that the technical evaluations and the responses to the generic letter have not yet been completed by our staff, and some of it is scheduling conflicts for the licensees at this point.

Are there any questions about that?

(No response.)

MR. MUNSON: So, again, this was just intended to sort of give you a little bit of background and bring you up to speed as to where we're at in terms of the temporary instruction with regard to the natural phenomena hazards for the fuel cycle facilities.

DR. BLEY: How did the inspections turn out at Westinghouse? You hit on that a little. Or can you talk about it?

MR. MUNSON: Well, actually the original set of slides that I gave you actually told you.

DR. BLEY: So you're not going to talk about that.

MR. MUNSON: The report hasn't been issued yet. It wasn't anything too specific, but there were a couple of issues identified. I just don't want to be too specific since the report's not been issued.

DR. BLEY: Okay.

MR. MUNSON: But hopefully we can talk more about that at a later date.

MR. SKILLMAN: Should we think about the sequence of inspections having been established based on some recognition of risk; in other words, the ones that are inspectable that might have had a greater

amount of risk will be the first facilities that get the TI inspection?

MR. MUNSON: That's a good question. Back when the original TI was performed, part of that scope was, are they safe to operate.

MR. SKILLMAN: Yes.

MR. MUNSON: And with the exception of Honeywell, everyone was determined to be safe to operate. In other words, you need to fix this, but it's not an immediate safety concern.

MR. SKILLMAN: Except for Honeywell.

MR. MUNSON: Except for Honeywell. Correct.

MR. SKILLMAN: Okay.

MR. MUNSON: So in that regard, yes, but the new TI, to my knowledge, that's not necessarily been their approach. The reason I say that is because obviously we would do NFS first, probably, if that were the case, or perhaps BWXT.

MR. SKILLMAN: Thank you.

MR. MUNSON: Sure. Any other questions?

MR. SKILLMAN: Colleagues, any further questions for Jeremy?

(No response.)

MR. SKILLMAN: Hearing none, I thank you,

and I believe at this point we are able to adjourn. I do not see remaining business, and so for my colleagues, are there any other questions that you wish to ask?

(No response.)

MR. SKILLMAN: Let me say for the record how much we appreciate this region taking the time, the resources, the effort for the presenters, for the management team, all who have worked hard to allow us to come here to participate with you.

Again, this is not our doing QA, this is our visiting a region and spending time with this team, and I just want to say thank you very much. To all who travel, I wish safe travels, and with that, we are adjourned.

(Whereupon, at 11:38 a.m., the meeting was adjourned.)

U.S.NRC
UNITED STATES NUCLEAR REGULATORY COMMISSION
Protecting People and the Environment

AP1000 Construction

Translating Technical Requirements and Licensing Commitments into Construction

Anthony Ponko & Robert Mathis
Division of Construction Inspection

Region II
July 28, 2016

Agenda

- Overview of design implementation at AP1000 construction sites
- Examples of inspection findings associated with translation of structural code requirements into final design output documents
- Digital I&C inspection implementation

Overview

- Vogtle Units 3 & 4 and V.C. Summer Units 2 & 3 are first AP1000 Plants under construction in U.S.
- Both plants licensed under 10 CFR 52 and reference AP1000 design certification document (Pt. 52, App. D)
- The detailed design of structures, systems, and components must comply with AP1000 DCD Tier 1 & Tier 2* information, including applicable codes and standards, and Inspections, Tests, Analysis and Acceptance Criteria (ITAAC)

Overview

- The importance of design control to safety is reflected in quality assurance requirements and the construction reactor oversight process (cROP)
  - Design Control one of 18 Quality Assurance Criteria in 10 CFR Part 50, Appendix B
  - Design/Engineering one of six cornerstones of safety identified in cROP

Overview

AP1000 design implementation during construction verified through:

- Routine ITAAC and programmatic inspections conducted by regional and resident inspectors in accordance with IMC 2503 and 2504
  - Review final construction documents
  - Review design deviations (disposition of nonconformances) and design change documents
- Engineering Design Verification (EDV) and ITAAC inspections conducted at vendor facilities in accordance with IMC 2507 and IMC 2503

Overview

Current status of AP1000 construction sites:

- 14 NRC identified violations associated with design control since implementation of cROP (6 Vogtle & 8 V.C. Summer)
- All violations of Very Low Safety Significance (Green)
- Both Plants currently in Licensee Response Column of Construction Action Matrix

Structural Inspection Examples

Anchorage and spacing of headed shear reinforcement in structural components of the nuclear island not in compliance with licensing basis (NCV 05200027/2013010-01)

- Bars used to resist out of plane shear forces in slabs and walls
- Typically used to enhance constructability/ alleviate congestion
- Anchorage and spacing not in compliance with Tier 2* code - ACI 349-01
- Bars too short and spaced too far apart to be fully effective

U.S.NRC
UNITED STATES NUCLEAR REGULATORY COMMISSION
Protecting People and the Environment

Structural Inspection Examples, cont.

Issue Resolution

- Adopt alternate acceptance criteria provided in ACI 318-11.
- Revise design as necessary where does not meet ACI 318-11 criteria for headed reinforcement
- LAR (License Amendment 5) required due to departure from Tier 2* information (ACI 349-01)

Structural Inspection Examples, cont.

Weld allowable stress calculation not in compliance with licensing basis (NCV 05200025/2015002-01)

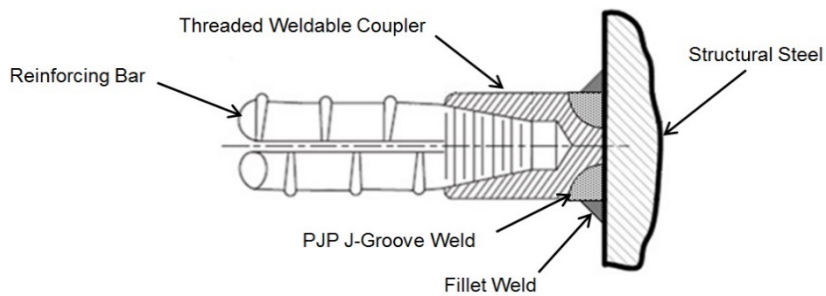

- Design of weld attaching mechanical coupler to steel plate not in compliance with Tier 2* code - AISC N690-94
- Embedments used to transmit loads to concrete structures
- Identified at V.C. Summer but affected both sites

Structural Inspection Examples, cont.

Issue Resolution

- Destructive testing of weld to verify sufficient capacity and to support approval of special system of design or construction in accordance with AISC N690-94

- LAR (License amendment 40) due to departure from Tier 2* information (AISC N690-94)

U.S.NRC

UNITED STATES NUCLEAR REGULATORY COMMISSION

Protecting People and the Environment

AP1000
Digital I&C ITAAC Inspection

Region II

July 28, 2016

Background

- IP 65001.22, Inspection of Digital Instrumentation and Control (DI&C), Issued 12/19/2011
- Front-Load Approach – Series of programmatic, implementation, and in-process testing observations
- Sampling Focus – System/Software life cycle attributes and design outputs. For DI&C, there is reliance on the Licensee having a rigorous process and Independent Verification & Validation (IV&V) program
- Inspection Emphasis: Process, Configuration Management, IV&V, Traceability throughout the development life cycle

Inspection Strategy

- Inspections driven by milestones
- Milestones coincide with IP 65001.22 Appendices 1-6 also modeled as system/software life cycle phases:
  - Planning Phase (Milestone 1)
  - Requirements Phase (Milestone 2)
  - Design & Implementation Phase (Milestone 3)
  - Integration Phase (Milestone 4)
  - Validation & Testing Phase (Milestone 5)
  - Installation Phase
- Inspections consist of a coordinated effort between Region II and NRO

DI&C Inspection Strategy

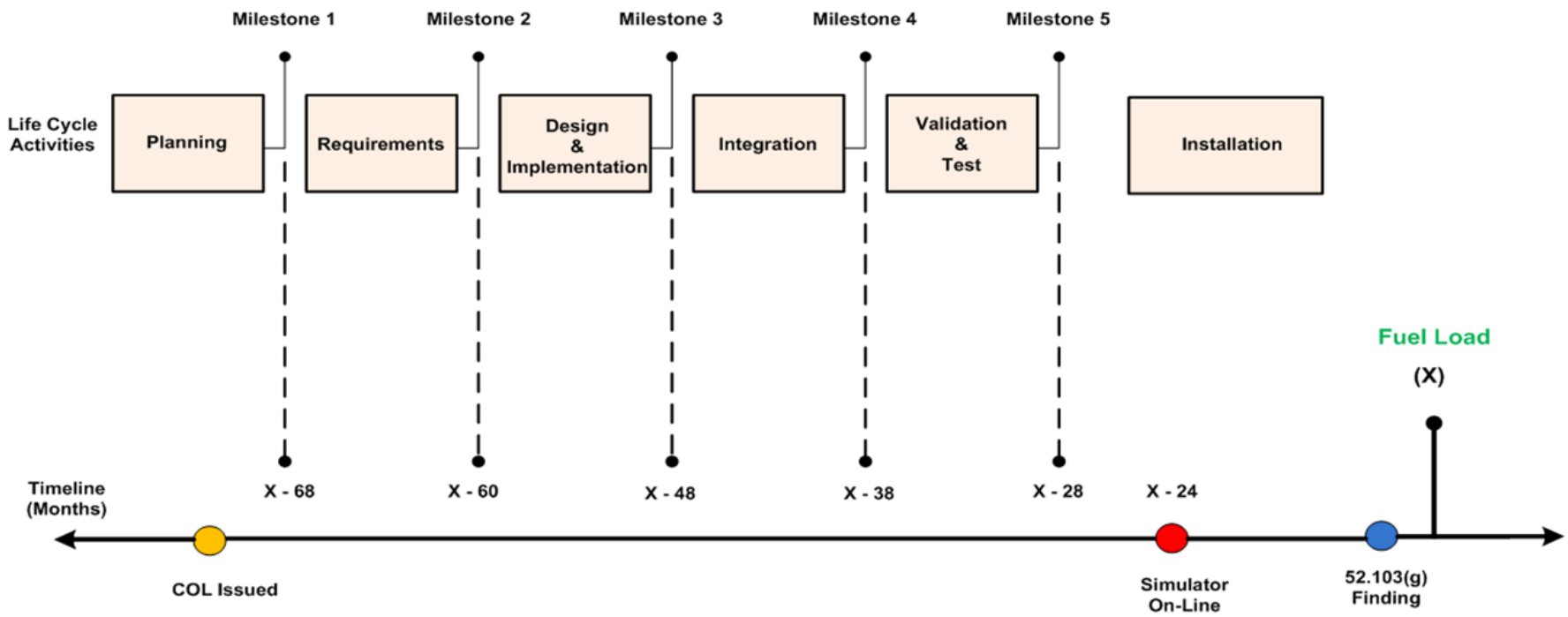

Digital I&C Development and Inspection Chronology

DI&C Inspection Examples

- Protection and Safety Monitoring System (PMS) Requirements Phase Inspection (Vogtle 3&4 @ Westinghouse) - May 2012
- Results: NOV, Green ITAAC Finding (ITAAC 2.5.02.11.b, 2.5.2.12)
- Inadequate translation of requirements contained in:
  - IEEE 1012, Software Verification and Validation
  - ASME NQA-1, Quality Assurance Program Requirements
  - IEEE 1074, Developing Software Life Cycle Processes
  - IEEE 803, Software Requirements Specification
- Issue Resolution: IV&V tasks and reports were completed; Traceability to Software Requirements Specification completed; Training on key processes, industry codes and standards; and Mapping of codes and standards to process and procedures performed.

DI&C Inspection Examples, cont.

- PMS Design, Implementation, and Testing Inspection (Vogtle 3&4 and VC Summer 2&3 @ Westinghouse) - March 2015
- Results: Notice of Nonconformance
- Inadequate Equipment Qualification associated with:
  - Current Transients in Isolation Devices
  - Electromagnetic Compatibility Testing for PMS Cabinets
  - Dedication of M&TE used for EMC Testing Services
- Corrective actions are in-process and will be verified by inspection

Surry Power Station – FLEX Modification Leads to Low Head Safety Injection Missile Protection Vulnerability

U.S. NRC REGION II

ACRS Brief

July 28, 2016

Phil McKenna, Senior Resident Inspector, Surry Power Station

Surry Power Station

- Two Westinghouse 3-loop PWR units
- Unit 1 & 2 - 920 MWe (gross) capacity each
- Unique DBA DHR system supplied by gravity flow. Ultimate heat sink is a 2 mile long intake canal.
- Unit 1 began operation in 1972, licensed until 2032
- Unit 2 began operation in 1973, licensed until 2033

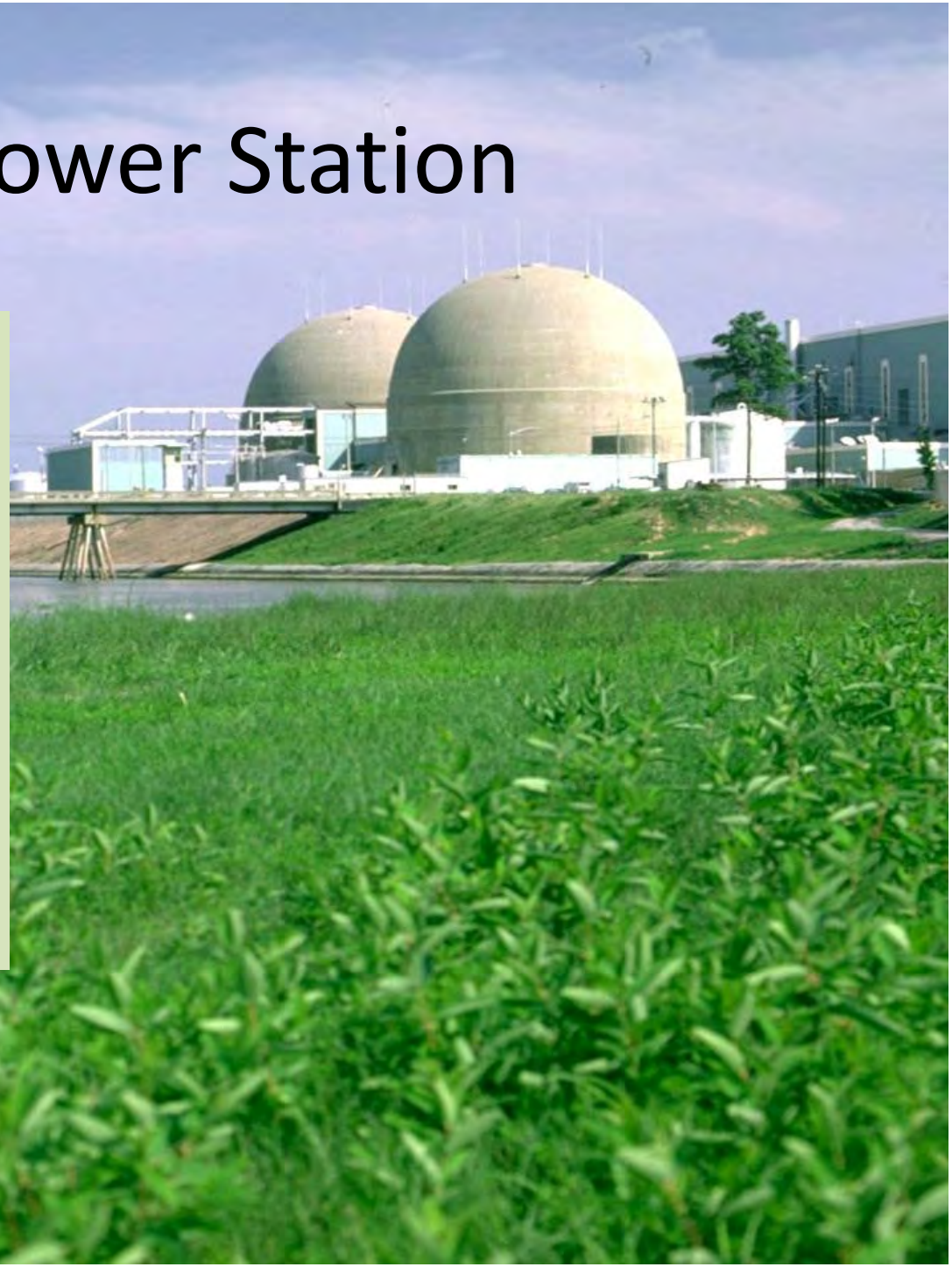

FLEX

A program of diverse and flexible coping strategies to mitigate a beyond design basis event.

- NRC Order EA-12-049, “Order Modifying Licenses with Regard to Requirements for Mitigation Strategies for Beyond Design Basis External Events
- NEI 12-06, “Diverse and Flexible Coping Strategies (FLEX) Implementation Guide

Safeguards
Vaults

CAUTION

DO NOT BLOCK OR HOLD DOOR OPEN
CAUTION
RADIATION AREA
RADIOACTIVE MATERIAL(S)
CAUTION
CAUTION

To Valve Pit
Connection
RCS Injection Pump
Location
From Containment
Spray Connection

CAUTION

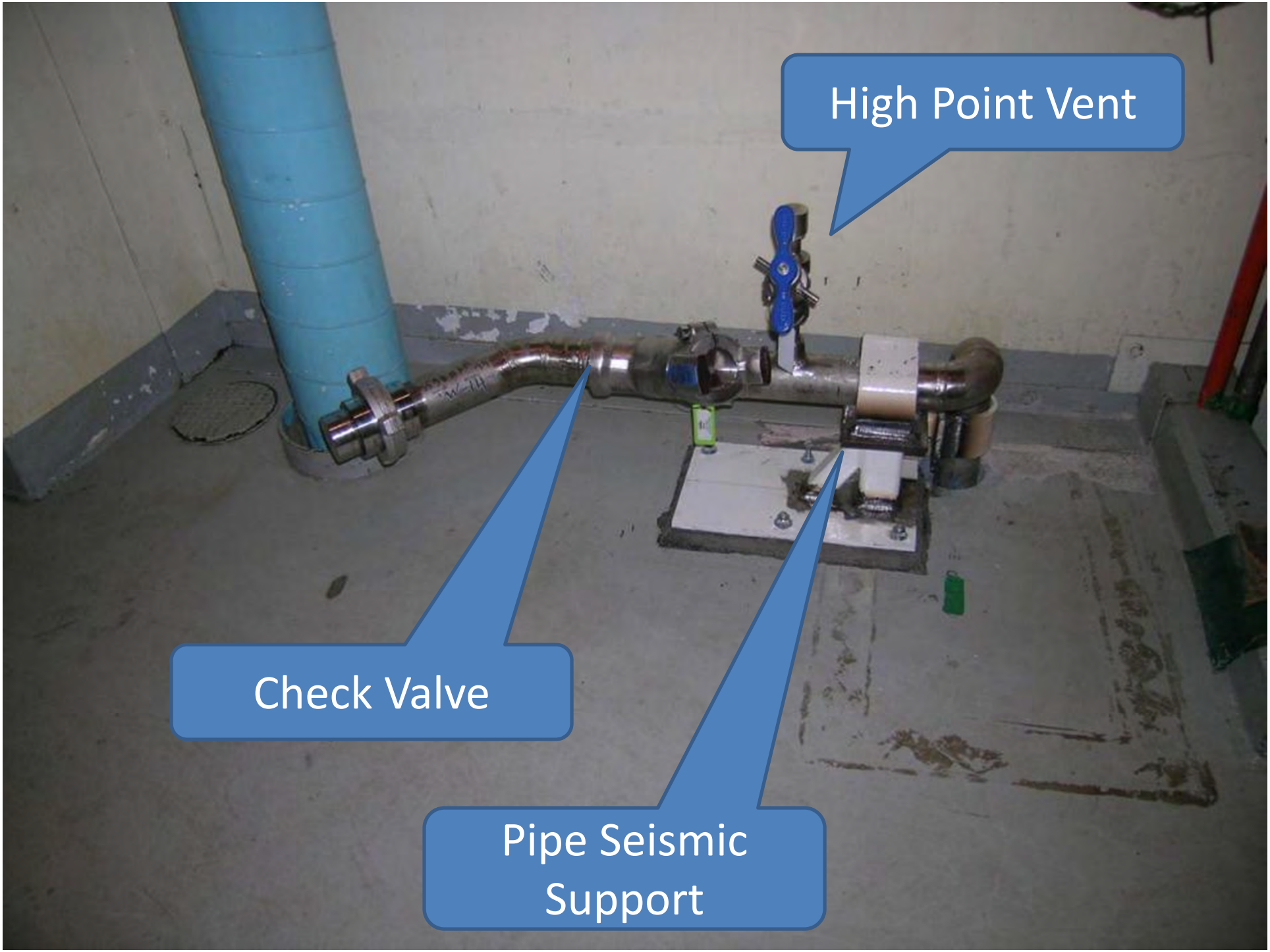
High Point Vent
Check Valve
Pipe Seismic Support

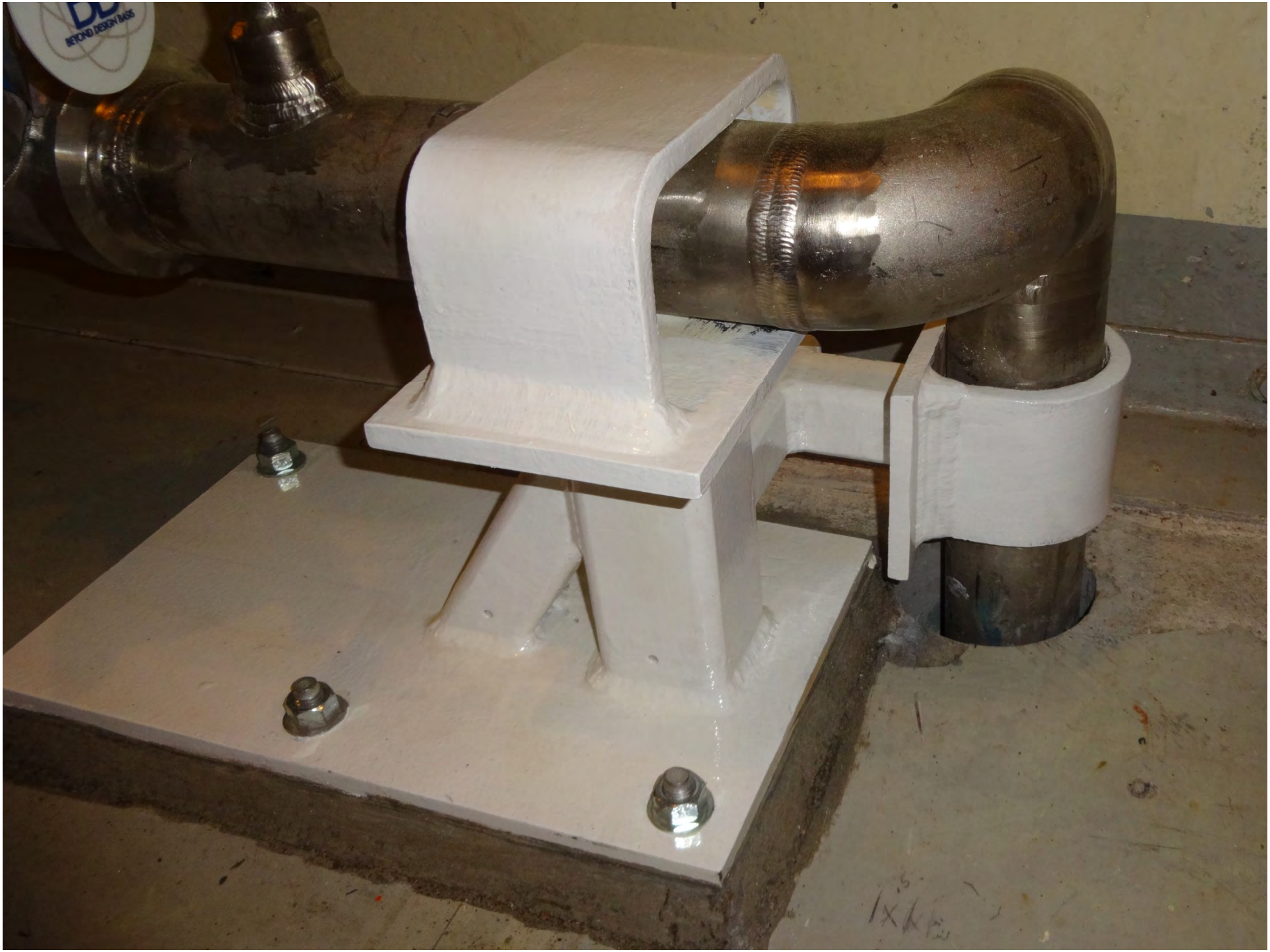
BEYOND DESIGN LABS

Pipe was cut below the seismic support

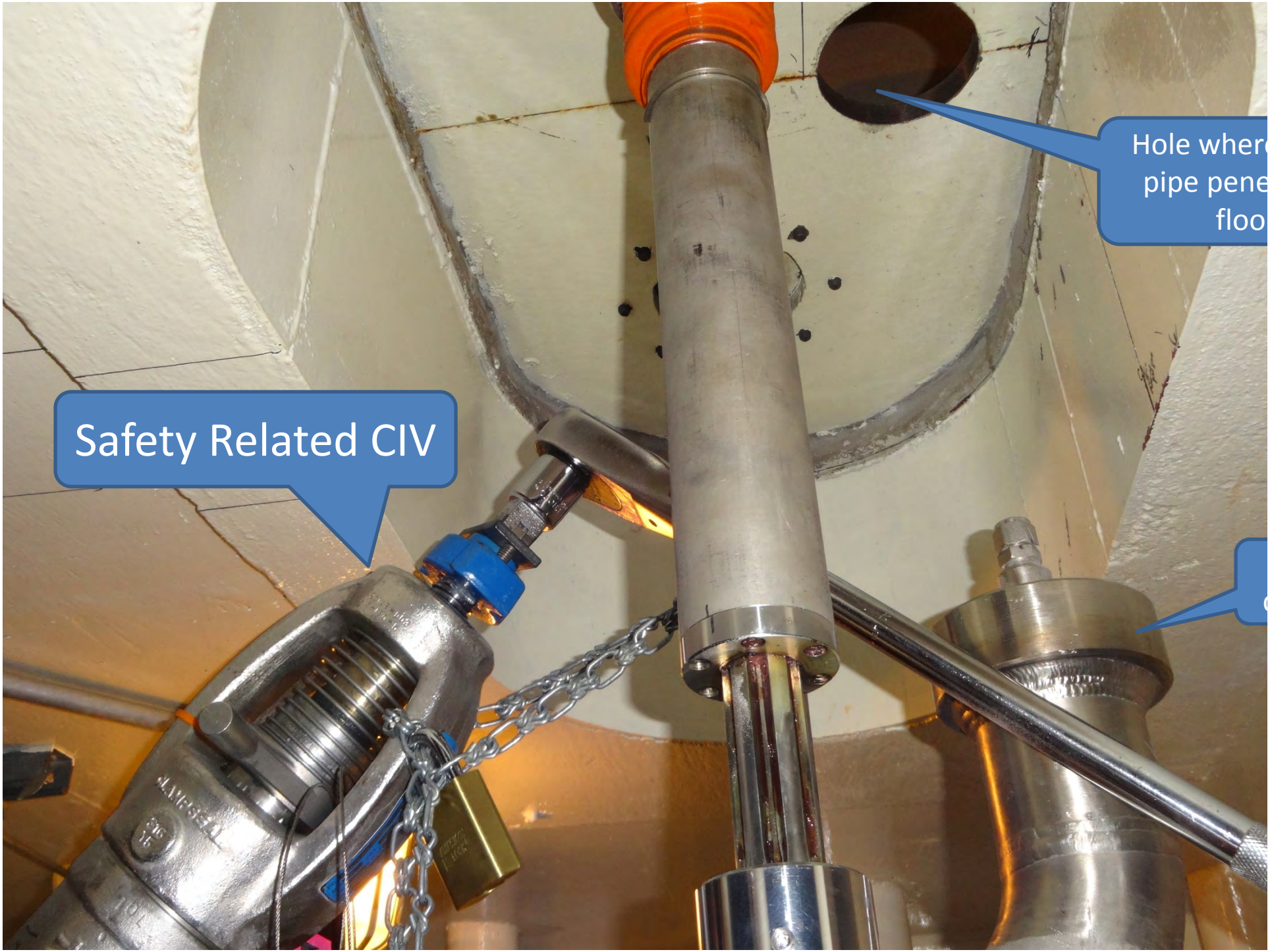
Hole where
pipe pene
floo
Safety Related CIV

ID tag that Surry uses to mark all FLEX equipment
Safety Related CIV

Safety Related CIV
Welded Connection to LHSI Hot Leg Injection

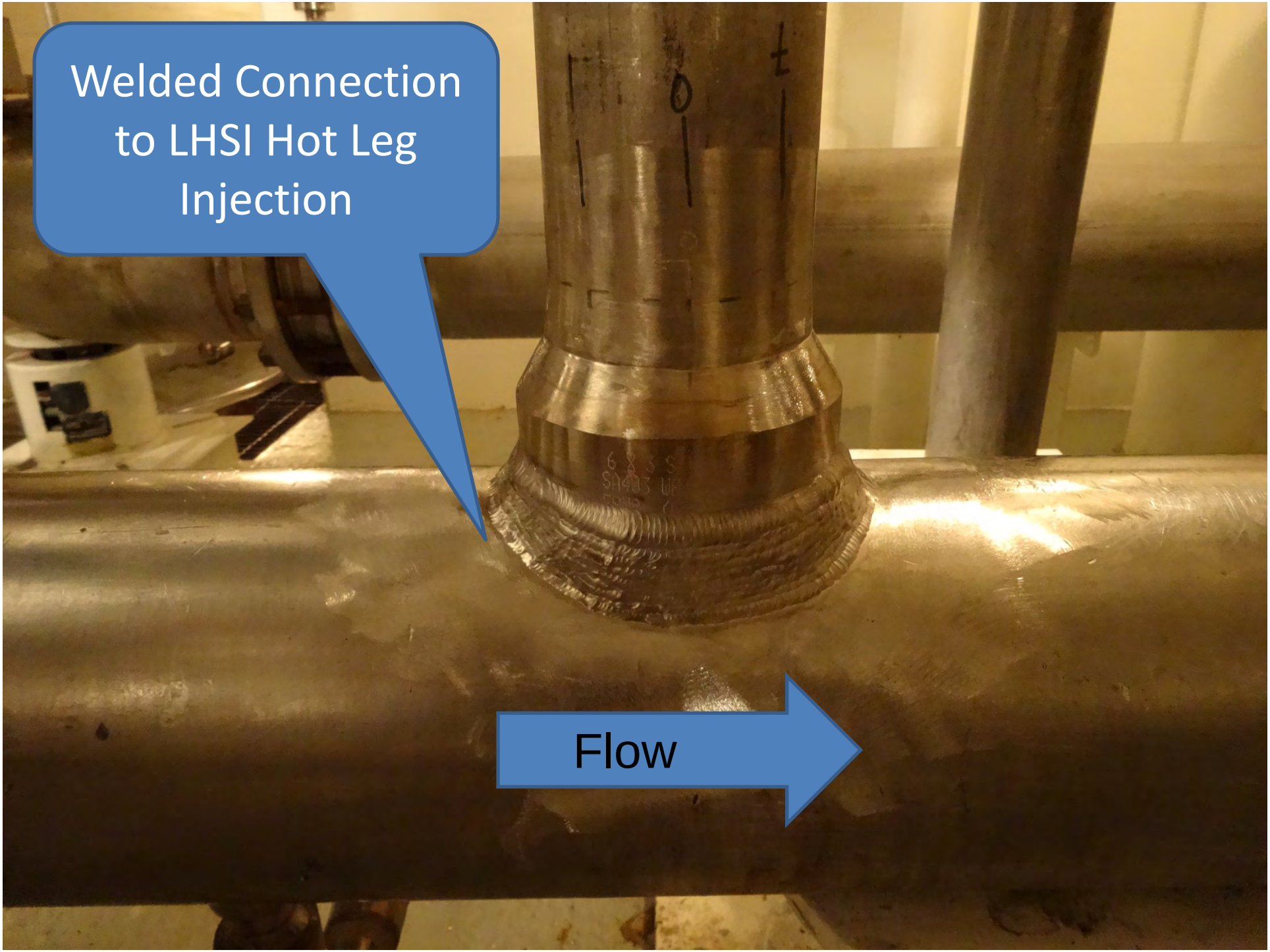
Welded Connection to LHSI Hot Leg Injection
Flow

This is the roof of the enclosure looking up. Flex Mod piping and valves are directly below

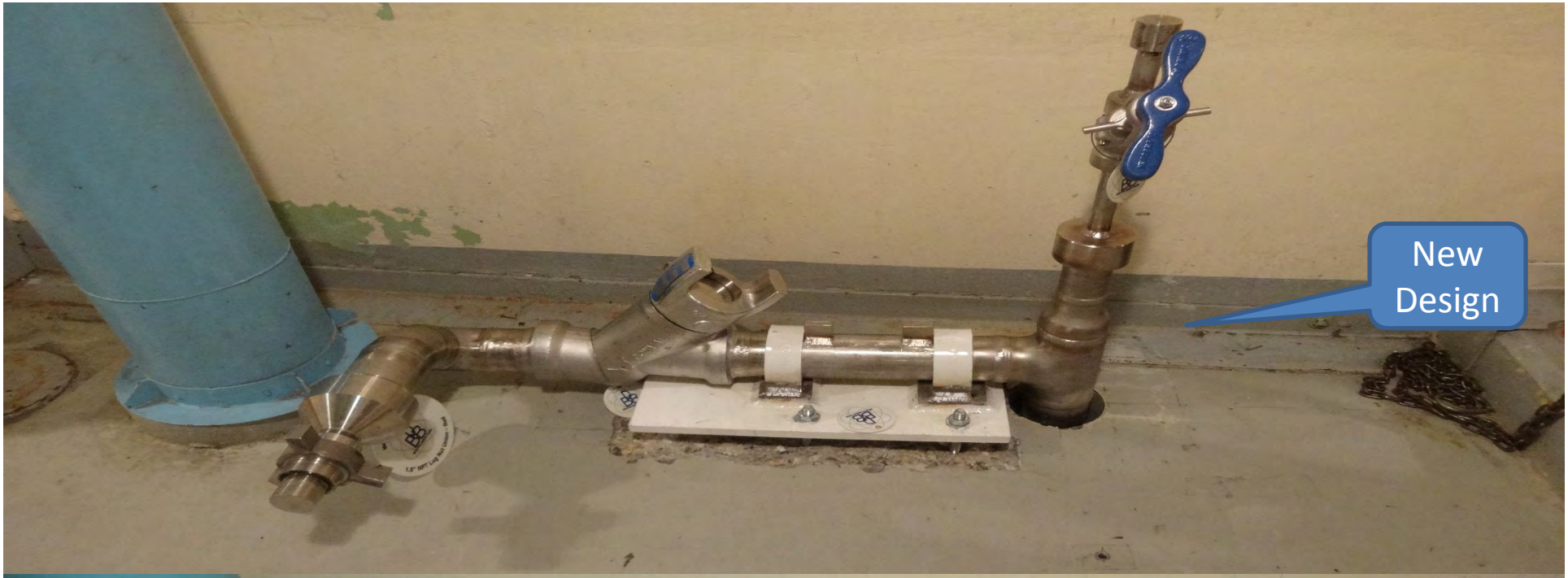
New
Design

Old
Design

New
Design

Inspector Newsletter Article

Photo 1: This is the horizontal run of piping that is installed at grade level (28.6 foot elevation) in the safeguards valve pit. The corrugated metal roof of the safeguards building (Photo 4) is directly above this run of piping. The green arrow points to the hole drilled into the floor which allows the run of piping to traverse down two levels to the welded LHSI piping connection. The resident's original concern was that a tornado missile impact to the piping on this level would transmit down two levels and potentially break the welded LHSI connection.

Photo 2: This photo shows the run of piping 2 levels below grade and upstream of valve 1-SI-500 (new containment isolation safety related boundary). The green arrow indicates where the pipe was temporarily cut out following the discovery of the inadequate tornado missile protection (pipe end is capped). The vertical run of this piping originally traversed up through two levels of the safeguards valve pit and connected to the horizontal piping run at grade level, but was redesigned to include a section of flexible braided steel piping.

Photo 3: This photo shows the welded connection to the LHSI piping (green arrow) two levels below grade. The resident's original concern was that a tornado missile impact to the piping two levels above this level would transmit down and potentially break this welded connection. The horizontal run of piping (red arrow) connects to valve 1-SI-500.

Photo 4: This photo shows the inside corrugated metal roof of the safeguards valve pit which is directly above the horizontal run of FLEX piping at grade level (looking up from the floor).

Photo 5: This photo shows (one level below grade) the updated FLEX piping design which includes a section of flexible braided steel piping. The green arrow shows were the piping penetrates the grade-level structure to meet with the horizontal piece of FLEX piping.

Background

- Inspection was being accomplished while Surry was installing the modifications during the Unit 1 fall 2013 refueling outage.
- Documented under inspection procedure (IP) 71111.18 (Plant Modifications).
- One resident reviewed electrical FLEX mods and the other resident reviewed mechanical FLEX mods.
- Surry completed their FLEX modifications on Unit 1 in May 2015 and on Unit 2 in December 2015.
- TI 2515/191 “Inspection of the Licensee’s Implementation of Mitigation Strategies and Spent Fuel Pool Instrumentation Orders and Emergency Preparedness Communication/Staffing Plans.

Violation Development

- Inspectors questioned the seismic support as part of inspection sample.
- Back and forth, discussions, walkdowns.
- Tornado missile concern.
- Licensee originally declared the LHSI piping “Operable but non-conforming to its design basis” in their immediate operability determination (and assigned a prompt operability determination (POD)).
- Licensee decided to cut the piping before the POD was completed to eliminate the possibility of a tornado missile impact.
- Performance Deficiency – Site specific design change procedure - “walkdowns required to confirm no adverse effects from the design change”.
- Violation – 10 CFR 50, Appendix B, Criterion III (Design Control).
- Risk Significance – Green.

Tornado Design Basis Documents

Systems, Structures, and Components (SSCs) are designed to withstand natural phenomena

- 10CFR50, App A (General Design Criteria), Criterion 2, “Design Bases for Protection Against Natural Phenomena”
- Critierion 4, “Environmental and Dynamic Effects Design Basis”

Methods acceptable to comply with these regulations are in:

- Reg Guide 1.76, “Design Basis Tornado for Nuclear Power Plants”
- Reg Guide 1.117, “Tornado Design Classification” (Rev. 2 was issued in July 2016 and changed title to “Protection Against Extreme Wind Events and Missiles for Nuclear Power Plants”
- Note: Appendix to RG 1.117 lists the SSCs that should be protected
- NUREG-0800, Section 3.5.1.4 of the Standard Review Plan

Newer Documents

- NRC Regulatory Issue Summary 2015-06, “Tornado Missile Protection”
- Enforcement Guidance Memorandum 15-002, “Enforcement Discretion for Tornado-Generated Missile Protection Noncompliance”
  - Plant can not comply with its current licensing basis for tornado generated missile protection (Would not have been applicable for Surry in this case)

Questions?

ACRS Briefing: Brunswick Nuclear Power Plant Emergency Diesel Generator Commercial Grade Dedication Finding

July 28, 2016

Mike Cain, SRI BWXT

Allen Bradley
700-RTC Relay

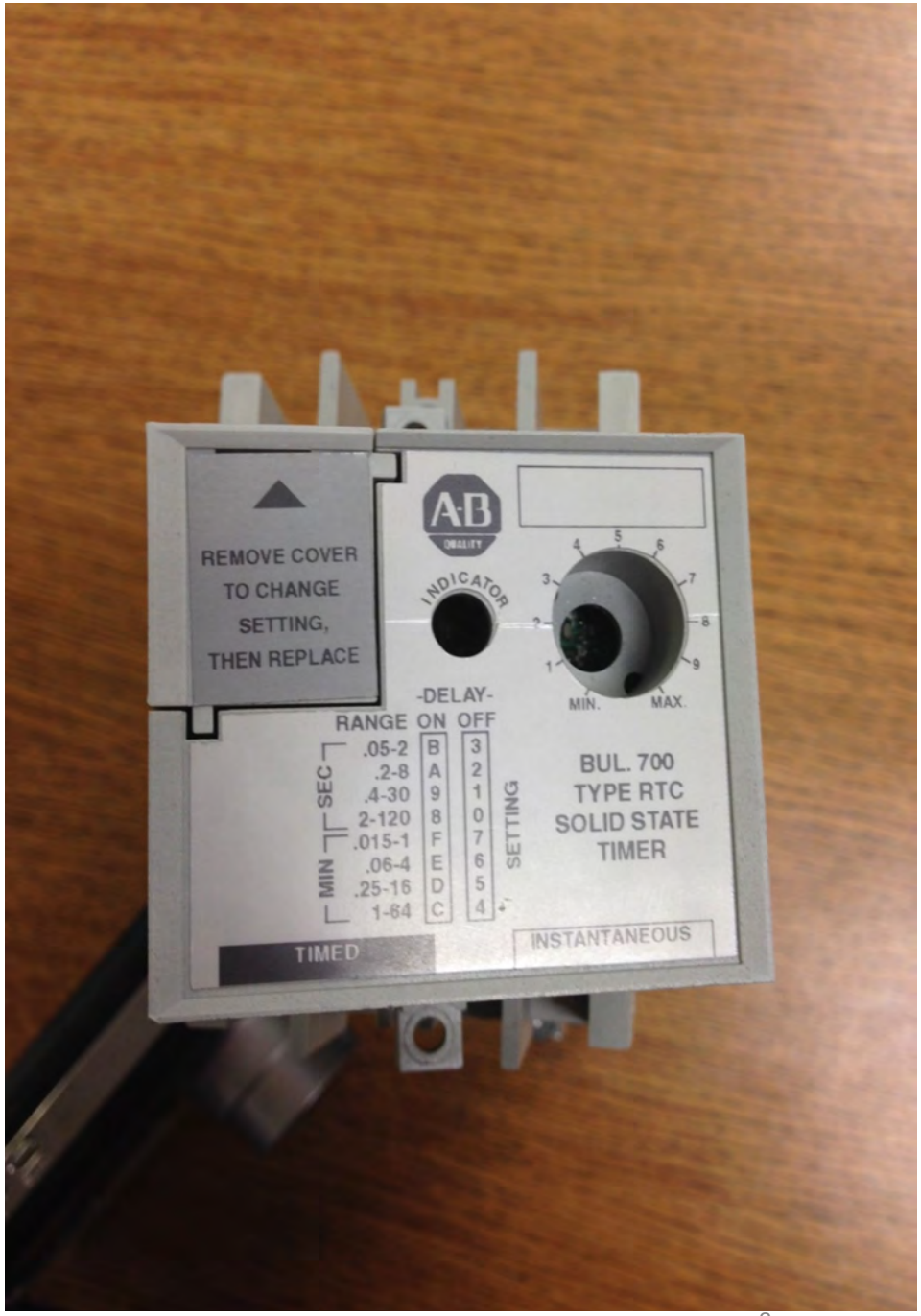

Allen Bradley 700-RTC Relay Internals

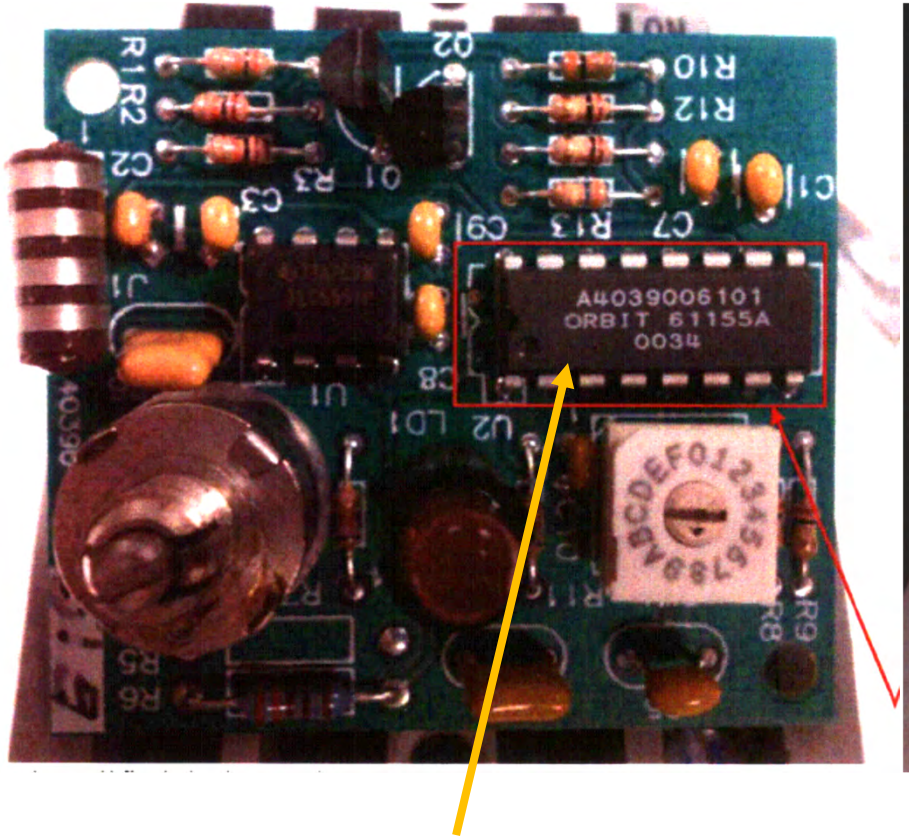

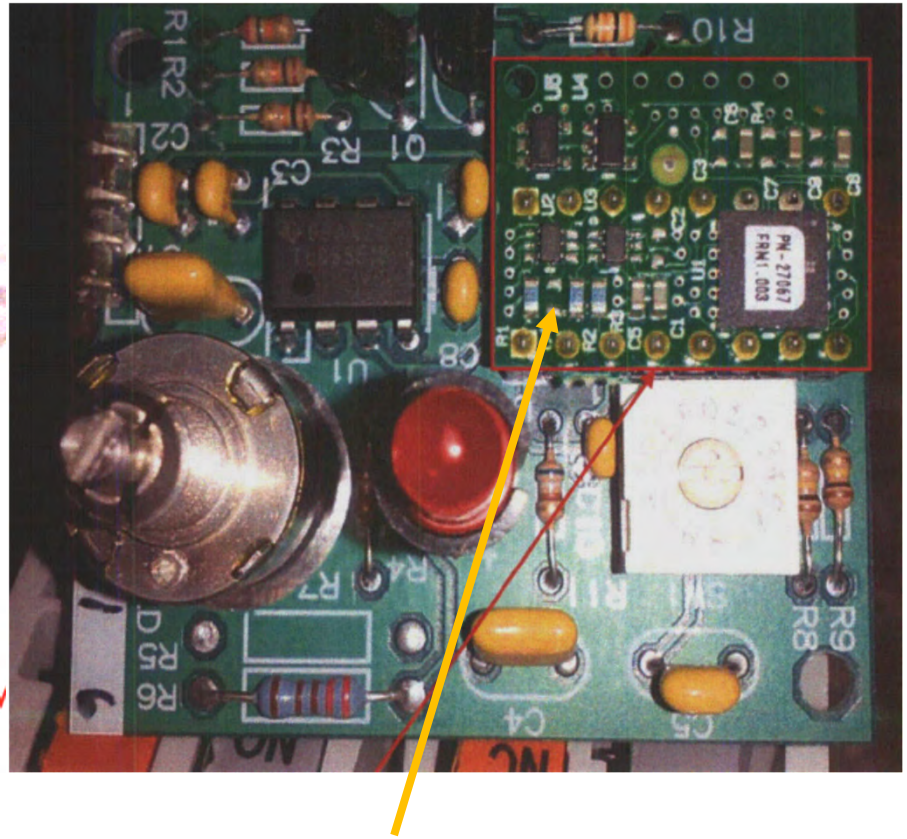

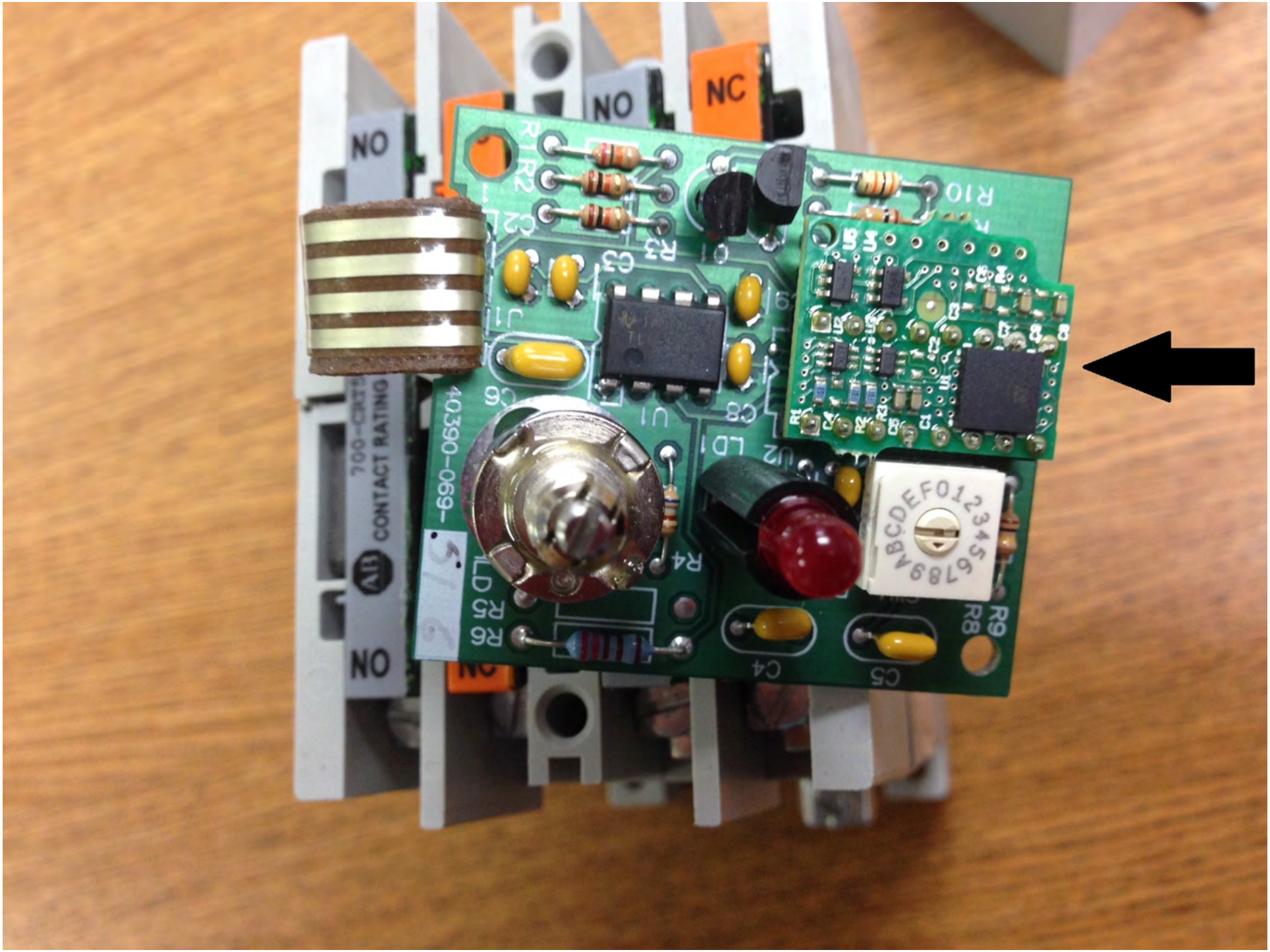
NO
NC
NO
NO
CONTACT RATING
40390-069-
R10
R3
C3
U1
C8
LD1
U2
R4
R5
R6
LD
C4
C5
R8
R9

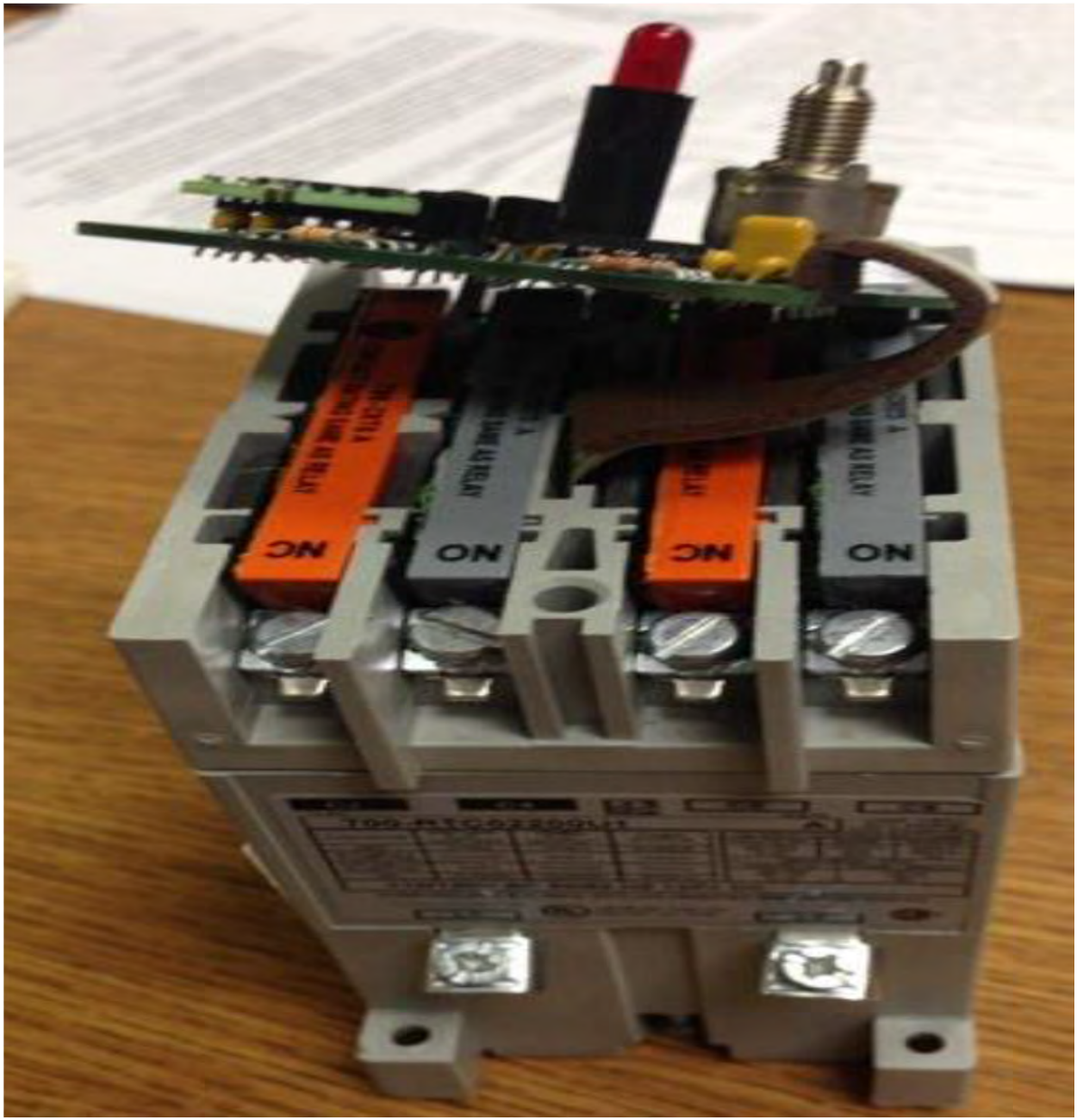
NC
NO
NC
NO

TIMELINE

- 3/17/15 – Emergency diesel generator (EDG)3 output breaker fails to close during LOOP portion of LOOP/LOCA test
- 3/18 – New RCR and RCR-X Allen Bradley 700-RTC relays are installed, EDG3 passes LOOP/LOCA test satisfactorily
- 3/19-21– EDG4 taken out of service for maintenance, RCR relay is proactively replaced . EDG4 LOOP test performed, output breaker attempted to close four times (chattered) before finally closing
- 3/21 – all 9 Allen Bradley 700-RTC relays in stock were bench tested and all chattered
- 3/22 – EDG4 original RCR relay reinstalled, no chattering
- 3/23 – Due to EDG4 issues, EDG3 relay was re-tested and this time failed due to relay chatter. Licensee installed a suppressive diode across the RCR-X relay to prevent electromagnetic interference (EMI) determined to be the cause of the relay chatter. It was later determined that the installation of a recorder across the RCR-X relay had acted as a suppression device, masking EMI and resulting in a SAT test on 3/18

Cause

What causes the trip of the output breaker –

On a LOOP, the RCR relay has a 0.7 second time delay between the time the DG output breaker is tripped and when it can reclose (breaker itself takes longer).

The RCR relay energizes first on an emergency diesel start signal, closing the contact to energize the RCR-X relay.

The RCR-X relay energizes to close the DG output breaker. DG3 passed the LOOP/LOCA portion of the test where the DG is originally in standby when the output breaker is closed, but **failed the subsequent LOOP portion of the test where the DG is running when the output breaker is opened and then recloses.** The failure occurred when the breaker closed and reopened several times, causing an anti-pump lockout, and a trip of the output breaker.

Issue

Testing confirmed that the ‘new’ series of Allen Bradley relays had a complex programmable logic device (CPLD) instead of the old style 16 pin Motorola timing IC chip, and were now susceptible to ‘DC Inductive Kick’ produced by the downstream RCR-X relay when it de-energizes.

5/1/15, Nuclear Logistics Inc. (NLI) issues a Part 21, stating that Allen Bradley 700-RTC relays had undergone an unannounced design change by the manufacturer sometime in the 2009-2010 timeframe.

These relays are commercial grade items. Brunswick commercial grade dedication did not detect the vendor design change.

A CPLD meets the NEI definition of a ‘digital-device’ per NEI guidance 01-01

What Happened Next

- PI&R follow-up inspection conducted week of June 15
- This issue was complex and encompassed several different aspects to include:
  - Design control
  - Operability of the other diesels
  - Past operating experience (North Anna, Diablo Canyon, and Vogtle). Same Brunswick EDG 3 relay chattered in 2013; however, breaker still closed
  - Duke commercial grade dedication processes
  - Vendor issues for both relay manufacturers and commercial grade dedication entities
  - Part 21 reporting
  - Cyber issues with the introduction of digital assets

Where We Ended Up

RII issued two GREEN, NRC Identified violations to Brunswick for:

- Failure to meet requirements of 10CFR50 App. B, Criterion III – Design Control

- Failure to meet the requirements of 10CFR50 App. B, Criterion XVI – Corrective Action, more specifically for failure to promptly identify conditions adverse to quality, one of which was significant

HQs issued the following generic communications:

- “The Operating Experience Note,” #008, July 2015 included an article concerning the subject relays

- Issued OpE COMM in August 2015 detailing the BNP issue

- Issued IN 16-01 and a RIS concerning Commercial Grade Dedication

Questions

WELD OVERLAY ISSUE

July 2016

Brendan Collins

RII (EB3)

TIMELINE

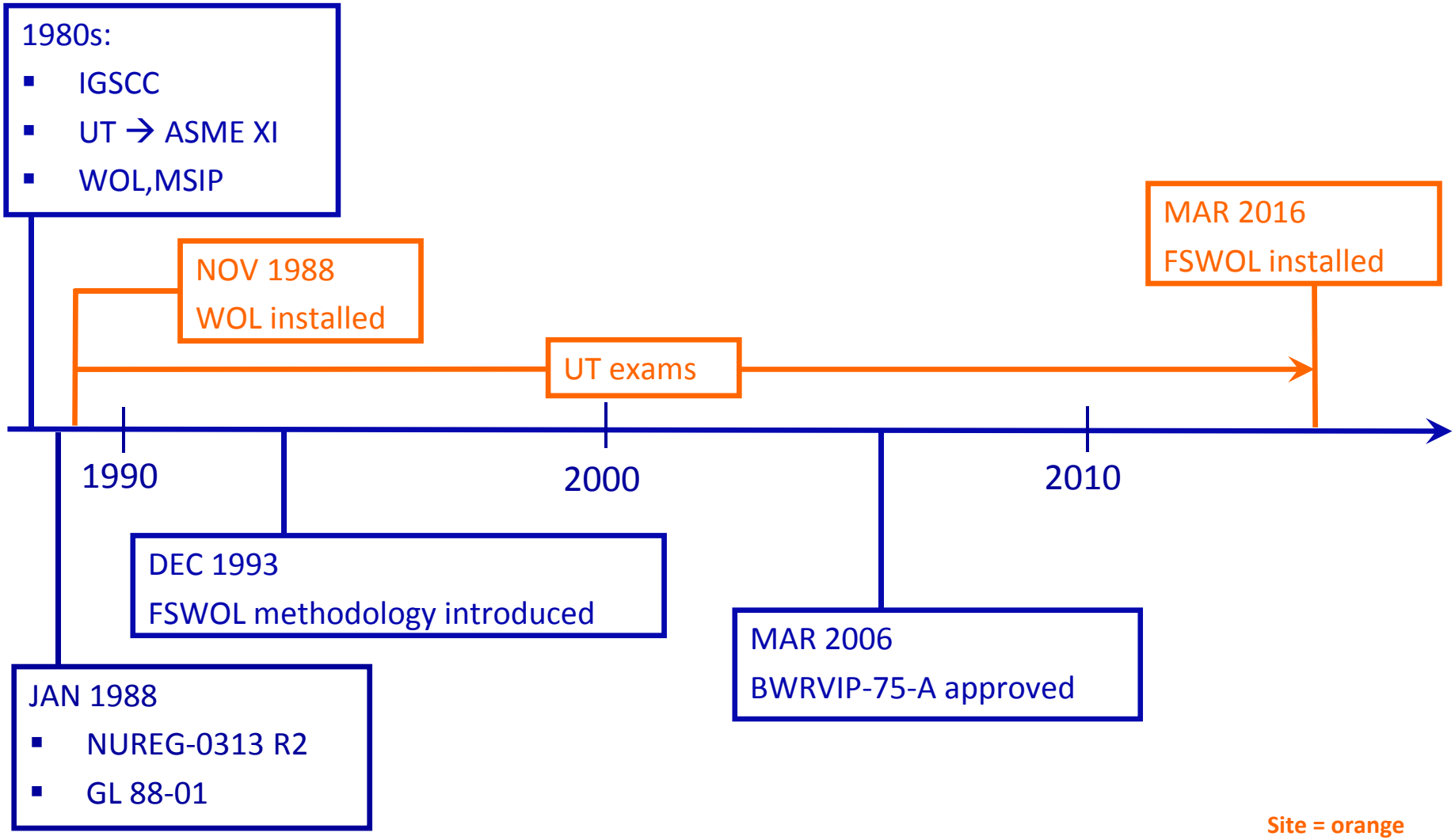

Site = orange

Industry = blue

RECIRC NOZZLE

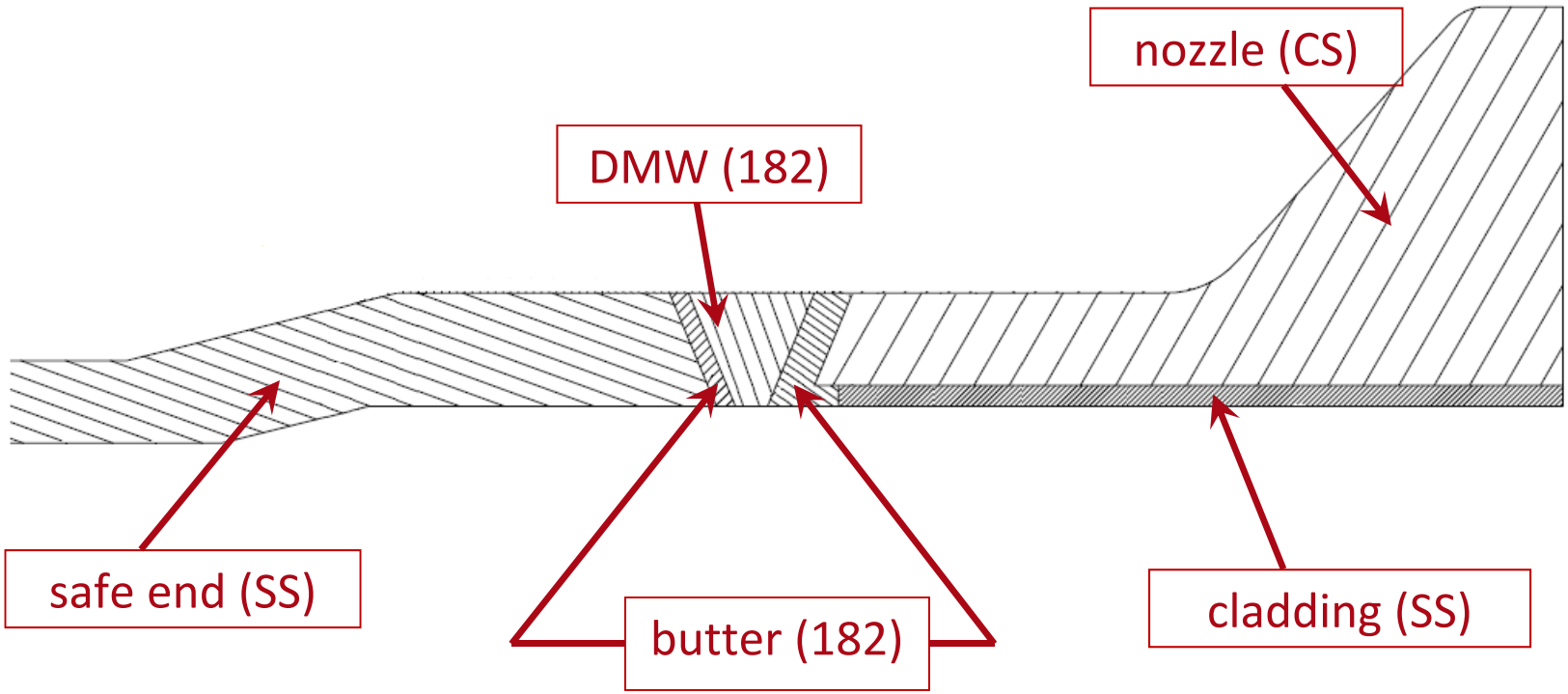

RECIRC NOZZLE

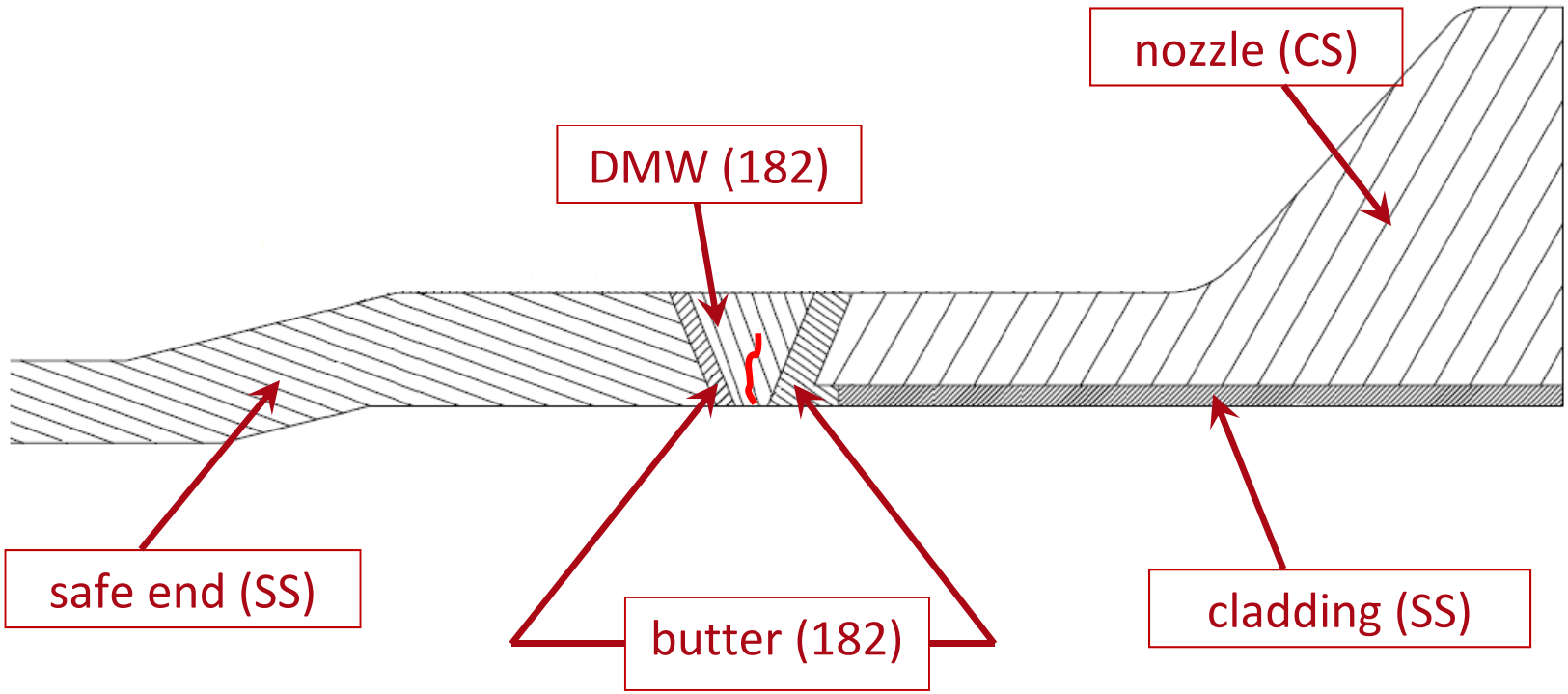

RECIRC NOZZLE

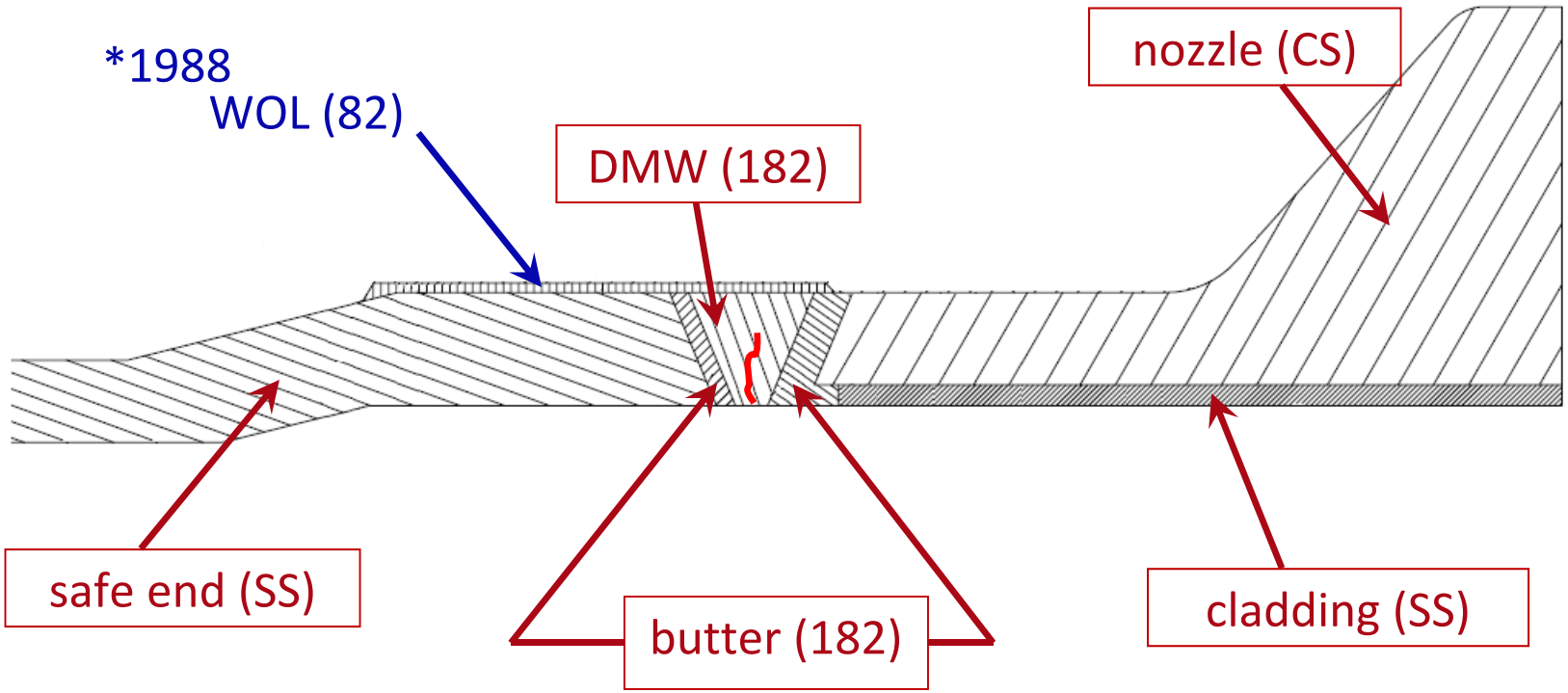

RECIRC NOZZLE

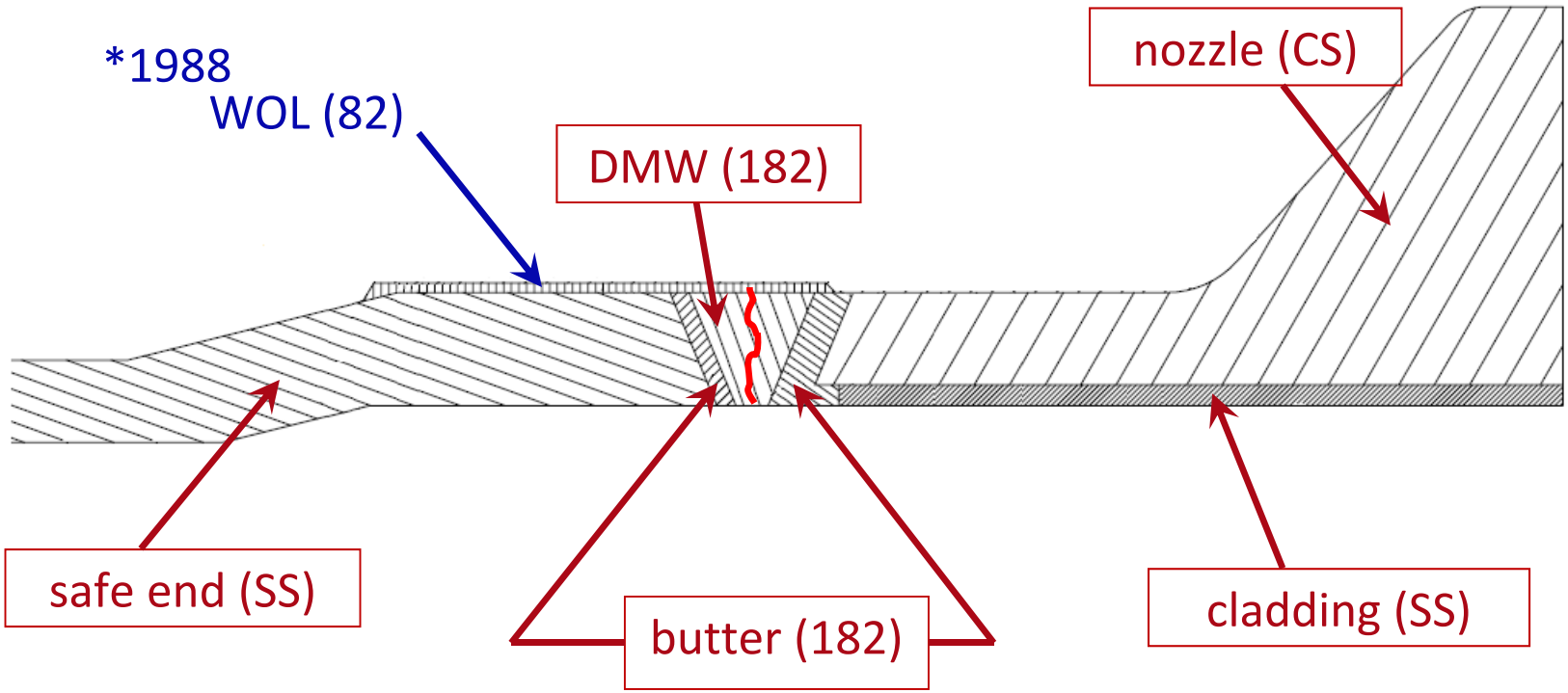

RECIRC NOZZLE

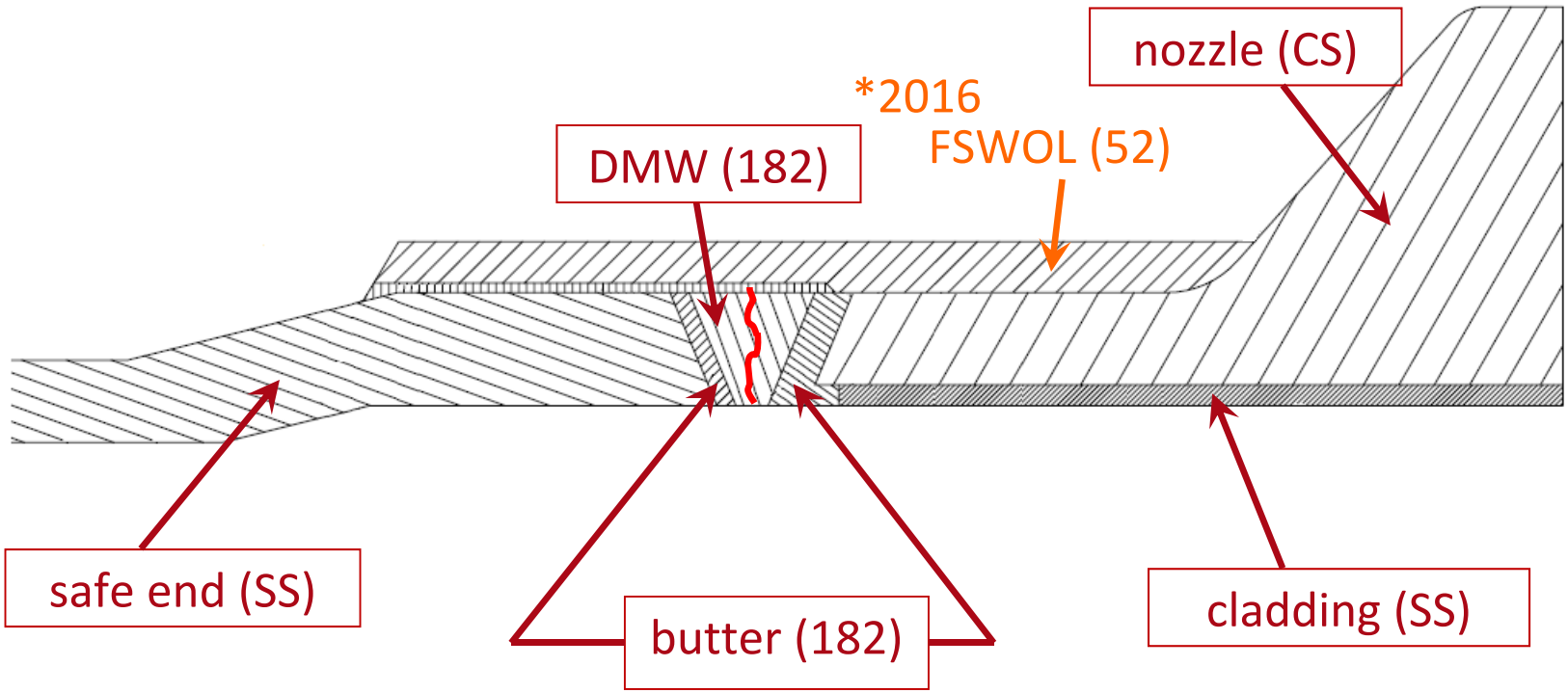

ALLOY COMPOSITION

	alloy 182 UNS W86182 ASME 2007 ERNiCrMo-3	alloy 82 UNS N06082 ASME 2007 ERNiCr-3	alloy 52 UNS N06052 ASME 2007 ERNiCrFe-7
C	0.10	0.10	0.04
Mn	5.0-9.5	2.5-3.5	1.0
Fe	10.0	3.0	7.0 - 11.0
P	0.03	0.03	0.02
S	0.015	0.015	0.015
Si	1.0	0.50	0.50
Cu	0.50	0.50	0.30
Ni	59.0 min	67.0 min	Rem
Co	0.12	0.12	-
Al	-	-	1.10
Ti	1.0	0.75	1.0
Cr	13.0-17.0	18.0-22.0	28.0 - 31.5
Mo	-	-	0.50
Nb(Cb)	-	-	-
Nb(Cb) + Ta	1.0-2.5	2.0-3.0	0.10
Al + Ti		0.010	1.5
Others	0.50	0.50	0.50

INDUSTRY INFORMATION

- **IAEA, "Stress Corrosion Cracking in Light Water Reactors: Good Practices and Lessons Learned," (NP-T-3.13, 2011)**
  - "For some components in boiling water reactors (BWRs) made of austenitic stainless steel or nickel based alloy; e.g. the recirculation piping, … intergranular stress corrosion cracking (IGSCC) has been a significant ageing degradation mechanism."
  - "The mechanism of IGSCC of BWR components has been evaluated in detail and various kinds of measures for preventing, mitigating and repairing IGSCC have been established. Nevertheless, the IGSCC problem has not been fully solved and is still a concern for some BWR components."
- **ANT International, "Environmentally-Assisted Degradation of Nickel-Base Alloys in LWRs" (2011)**
  - "Although IGSCC can be initiated in laboratory tests in the higher Cr content alloys, such as Alloy 82, there have been no occurrences of IGSCC in BWRs operating under the water chemistry guidelines recommended by EPRI. Indeed, in 1988, the United States Nuclear Regulatory Commission (USNRC) issued a statement … based on plant experience that '*Inconel 82 is the only commonly used nickel-base weld alloy (in BWRs) considered to be resistant (to SCC)*'."

NRC ACTIONS

- **Address Site Issue**
  - Finish assessing site's actions
  - Identify any Performance Deficiencies
  - Issue inspection report

- **Address Potential Industry-Wide Implications**
  - Assess potential first instance of crack growth into Alloy 82 overlay material
  - Evaluate possible implications on other plants
  - Engage industry to ensure information is communicated

WELD OVERLAY ISSUE

July 2016

Brendan Collins

RII (EB3)

U.S.NRC
Protecting People and the Environment

Nuclear Regulatory Commission

Cyber Security Program Implementation Updated for ACRS

Scott Shaeffer, Branch Chief, RII/DRS/EB2

July 28, 2016

Briefing Topics to be Discussed

- NRC Cyber Security History
- Guidance Documents
- Completed Milestone 1-7 Interim Cyber Security Program Attributes
- Milestone 8 Full Implementation
- Cyber Reporting Requirements
- Other Cyber Related Topics

Limitations for Cyber Discussions

- Most Cyber Security reports and other information are security related (not Public)

- Unique Cyber Security Language

  - Critical Digital Assets (CDAs), threat vectors, digital controls, portable media controls, etc.

NRC Cyber Security History

- **2002-2003:** NRC included the first cyber requirements in Physical Security and Design Basis Threat Orders
- **2005:** NRC supported industry voluntary cyber program (NEI 04-04)
- **2009:** 10 CFR 73.54, Cyber Security Rule
- **2010:** NRC published Regulatory Guide 5.71
- **2012:** Implementation of Interim Cyber Security measures
- **2014-2015:** Endorsed NEI 13-10 Cyber Security Control Assessments
  - Graded Consequence Based Approach
- **December 2015** – Completed initial cyber inspections at all Part 50 reactors

Guidance Documents for Cyber Implementation

- Regulatory Guide (RG) 5.71 "Cyber Security Programs for Nuclear Facilities" (Jan 2010)
- NEI 08-09, Rev. 6 "Cyber Security Plan For Power Reactors" (April 2010)
- NEI 13-10, Rev 4 "Cyber Security Assessments" (December 2015)

RG 5.71 Conceptual Approach

Cyber Security Assessment Team

↓

Identify Critical Digital Assets

↓

Apply Defensive Architecture

↓

Address Security Controls

1. Address each control for all CDAs, or
2. Apply alternative measures, or
3. Explain why a control is N/A

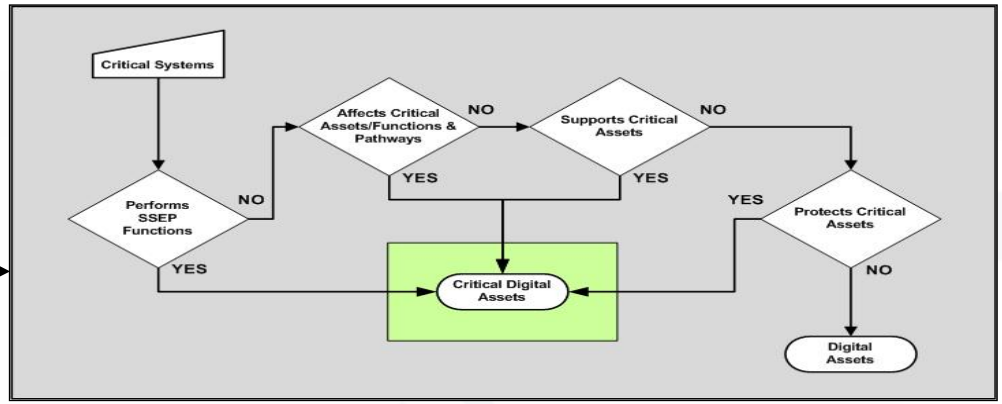

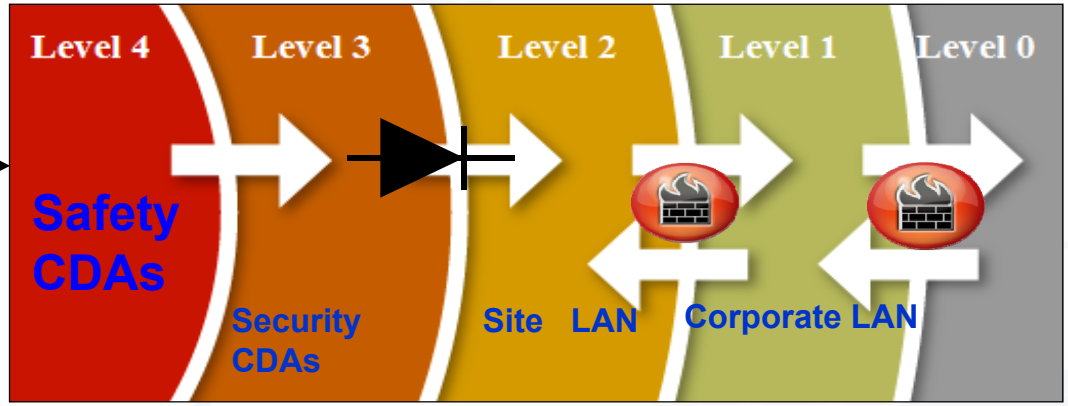

Milestones 1-7 Interim Implementation

- Required controls for key CDAs by 12/31/2012
- Initial NRC inspections completed 12/31/2015
- Working with NEI/industry on the resolution to generic issues via the SFAQ process
- NRC to audit the corrective actions associated with the Milestone 1-7 cyber security inspection findings in CY2016 & CY2017

NRC Cyber Security Program

Inspected 10 CFR 73.54 Basic Requirements:

1. Identify digital assets and communication systems associated with SSEP functions.

2. Apply & Maintain a Defense-in-Depth Protective Strategy. (portable media, scanning, data diode, etc).

3. Implement Security Controls to protect digital assets and communications systems.

4. Identify, Respond and Mitigate against cyber attacks.

NRC Cyber Security Program

10 CFR 73.54 Basic Requirements:

5. Training commensurate with roles and responsibilities to facility personnel.

6. Review/Maintain the CSP as a component of the Physical Security Plan.

7. Retain records and supporting technical documentation.

Full Implementation (Milestone 8)

Milestone 8 Activities:

- Full Implementation of controls on **all** CDAs
- Cyber Attack Mitigation and Incident Response
- Supply Chain
  - -Adds security requirements relevant to vendors
- Enhance CDA integrity to prevent CDAs from accessing, receiving, transmitting, or producing unverified information
- Configuration Management
- Ongoing Evaluation and Management of Cyber Risk
- Effectiveness Reviews of the CSP program and controls

Cyber Security Plans
Milestone 8 Preparations

- Conducting tabletops, pilots, and workshops to develop additional guidance
- Regional inspectors included in Milestone 8 tabletop review to improve consistency, additional NRC cyber training has been developed
- NRC to initiate Milestone 8 inspections starting July 2017

Cyber Reporting Requirement

- The Cyber Security Notification rulemaking became effective on December 2, 2015
- Implementation date – May 2, 2016
- RG 5.83 provides NRC guidance
- NEI guidance document (NEI 15-09)

Cyber Security Event Notification Rule

- **One-hour notifications**
  - a cyber attack that adversely impacted SSEP function
- **Four-hour notifications**
  - cyber attack that could have caused an adverse impact to SSEP
  - suspected or actual cyber attack initiated by personnel with physical or electronic access to digital computer and communication systems
- **Eight-hour notifications**
  - After receipt or collection of information regarding observed behavior, activities, or statements that may indicate intelligence gathering or pre-operational planning related to a cyber attack
- **24-hour recordable events**

Other Cyber Related Topics

- Staff evaluating cyber security for decommissioning units and ISFSIs
- New reactors (Part 52) cyber application
  - Same requirements as Part 50
  - Differences in CDA profiles, systems, and numbers
  - Different controls
- Updating applicable RGs associated with DBT, Security Training, and Insider Mitigation requirements consistent with Cyber Security Program

Fuel Cycle Cyber Security

- NRC Commission approved high-priority rulemaking to develop cyber security requirements for fuel cycle facility licensees
- The rulemaking will be graded based on the consequence of concern for the facility type
- The proposed rulemaking should be sent to the Commission early in 2017
- The final rulemaking is targeted for 2018

Full Cyber Implementation

- What does full cyber implementation mean?
- What does a running cyber program look like?
- The cyber security staff at the corporate and site level need awareness and understanding of NRC guidance and requirements.

Cyber Security is a Program not a Project

Questions

Natural Phenomena Hazards Update: Advisory Committee Reactor Safeguards (ACRS)

Jeremy Munson
Division of Fuel Facility Inspection
July 2016

U.S.NRC
United States Nuclear Regulatory Commission
Protecting People and the Environment

U.S.NRC
United States Nuclear Regulatory Commission
Protecting People and the Environment

Background

- Fukushima earthquake in 2011
- Information Notice (IN) 2011-008
- Temporary Instruction (TI) 2600/15 to confirm compliance with 10 CFR Part 70 Subpart H in 2012
- Inspections identified potential generic issue
- Un-Resolved Items (URIs) were issued
- Generic Letter (GL) 2015-01 issued on June 22, 2015 (ADAMS ML14328A029)
- Interim Staff Guidance (ISG) FCSE-ISG-15 issued on July 7, 2015 (ML15121A044)

U.S.NRC
United States Nuclear Regulatory Commission
Protecting People and the Environment

Potential Safety Concerns

- Age of facilities – 60 yrs
- Built to old building codes
- Lack of NPH requirements
- Lack of documented basis for conclusions in Integrated Safety Analysis (ISA)
- Code requirements and hazards have changed

U.S.NRC
United States Nuclear Regulatory Commission
Protecting People and the Environment

Purpose of GL

- Request information to verify compliance with 10 CFR Part 70 Subpart H regarding NPH
- Verify that ISAs address the impacts of natural phenomena hazard events

Regulatory Basis

- Regulations in 10 CFR 70.62 (c)(1) require:
  - Licensee shall conduct and maintain an ISA
  - ISA identifies potential accident sequences including the effects from natural phenomena events

U.S.NRC
United States Nuclear Regulatory Commission
Protecting People and the Environment

Types of NPH Events

- Seismic
- Flooding
- High winds/tornadoes/missiles
- Excessive precipitation
- Lightning strikes/fires
- Meteorites
- Volcanoes
- Tsunamis
- Rapid erosion/sinkholes

Current Status

- Responses received from all licensees
- Site visits in-progress
- Technical evaluations in-progress
- TI inspections in-progress

U.S.NRC
United States Nuclear Regulatory Commission
Protecting People and the Environment

Site Visits

- Westinghouse – December 2015
- NFS – February 2016
- BWXT – April 2016
- GNFA – TBD
- No site visits planned for Honeywell, MOX, Urenco, or Areva

TI Inspections

- First TI Inspection completed (Westinghouse) on July 14, 2016
- AREVA scheduled for week of August 29, 2016
- All other sites TBD

Questions

U.S.NRC
United States Nuclear Regulatory Commission
Protecting People and the Environment

Reference Slides

Information Requested

- Definitions of “unlikely,” “highly unlikely,” and “credible” for NPH events
- Current risk evaluation of NPH events
- List of IROFS for NPH events
- Results of ISA review
- Results of walkdowns or assessments

Interim Staff Guidance (ISG)

- ISG-15 issued on July 7, 2015
- General guidance on ISA content & definitions
- Use of graded approach
- Evaluation of existing structures, including internal components and IROFS
- Seismic design and evaluation guidance
- Emergency response

Closure Process

- GL closure strategy described in ML15195A474.
- Closure strategy consists of 3 parts:
  - Evaluation of licensee responses
  - Perform TI inspections
  - Issue closure letter to licensee
- Goal of completing GL closure activities (review of responses, site visits, and inspections) by end of 2016.

HQ Technical Evaluation

- Similar to a Safety Evaluation Report (SER)
- Includes issuance of RAIs
- Verify **reasonable assurance** that the licensees' approved ISA methodology adequately addresses NPH events such that the performance requirements are met.
- Staff will prepare a written evaluation of their findings and formally issue it to the licensee by letter.

U.S.NRC
United States Nuclear Regulatory Commission
Protecting People and the Environment

TI 2600/016

- Temporary Instruction (TI) 2600-016 was issued on December 17, 2015 (ML111030453).
- The TI was developed to independently verify the licensee's implementation of the GL responses.
- All licensees of operating facilities will be inspected using the TI and an inspection report will be issued.
- For licensees with URIs, the TI will provide the mechanism for closure.

Structure of TI

- Assessment of NPH ISA accident sequences
- Prevention/Mitigation strategies
- Focuses on implementation instead of methodology
- Validation of ISA assumptions

Potential Inspection Topics

- Review of NPH ISA accident sequences
  - Criticality
  - Chemical
  - Fire
- Independent walkdowns to validate ISA assumptions
- Facility modifications
- Emergency preparedness procedures
- Structural

TI 2600/016

Inspection Team

- DFFI Team Lead (PPM)
- DFFI inspector (NCS/ISA)
- DFFI inspector (CHEM/FIRE/ISA) – as needed
- DFFI inspector (EP)
- HQ Specialized Structural Expertise

Support Staff

- HQ Project Mgr. – licensing questions
- HQ Tech. Reviewers – ISA methodology questions
- Other Technical Experts

TI 2600/016 Schedule

- Westinghouse – July 11, 2016
- Areva Richland – August 29, 2016
- All others - TBD

GL 2015-01 Progress Checklist

1. Westinghouse

- ✓ **GL Response (8/26/15)**
- ✓ **RSI (2/26/16)**
- ✓ **Site Visit (12/8/15)**
- **RSI Response** (4/1/16)
- **Technical Review**
  - ☐ Staff Evaluation Report
  - ☐ TI Inspection (7/11/16)
  - ☐ Closure Letter

2. NFS

- ✓ **GL Response (9/14/15)**
- ✓ **RSI (2/8/16)**
- ✓ **Site Visit (2/23/16)**
- **RSI Response (3/9/16, extension: 6/7/16)**
- **Technical Review**
  - ☐ Staff Evaluation Report
  - ☐ TI Inspection
  - ☐ Closure Letter

GL 2015-01 Progress Checklist (Cont.)

3. BWXT

- ✓ **GL Response (9/18/15)**
- ✓ **Site Visit (4/18/16)**
- ☐ RSI
- ☐ RSI Response
- **Technical Review**
  - ☐ Staff Evaluation Report
  - ☐ TI Inspection
  - ☐ Closure Letter

4. GNF-A

- ✓ **GL Response (7/22/15)**
- ☐ RSI
- ☐ Site Visit (mid June)
- ☐ RSI Response
- **Technical Review**
  - ☐ Staff Evaluation Report
  - ☐ TI Inspection
  - ☐ Closure Letter

GL 2015-01 Progress Checklist (Cont.)

5. AREVA

- ✓ **GL Response (9/18/15)**
- ✓ **RSI (12/4/15)**
- ✓ **Site Visit (4/18/16)**
- ✓ **RSI Response (2/25/16)**
- **Technical Review**
  - ☐ Staff Evaluation Report
  - ☐ TI Inspection
  - ☐ Closure Letter