SBK-L-16071

ENCLOSURE 3

MPR-4273, Revision 0, "Seabrook Station - Implications of Large-Scale Test Program Results on Reinforced Concrete Affected by Alkali-Silica Reaction," July 2016.

(Non-Proprietary)

--Non-Proprietary Version--

MPR

MPR-4273
Revision 0
(Seabrook FP# 101050)
July 2016

-- Proprietary to NextEra Energy Seabrook and MPR Associates --

Seabrook Station - Implications of Large-Scale Test Program Results on Reinforced Concrete Affected by Alkali-Silica Reaction

QUALITY ASSURANCE DOCUMENT
This document has been prepared, reviewed, and approved in accordance with the Quality Assurance requirements of 10CFR50 Appendix B and/or ASME NQA-1, as specified in the MPR Nuclear Quality Assurance Program.

Prepared for

NextEra Energy Seabrook
P. O. Box 300; Lafayette Rd. Seabrook, NH 03874

--Non-Proprietary Version--

MPR

Seabrook Station - Implications of Large-Scale Test Program Results on Reinforced Concrete Affected by Alkali-Silica Reaction

MPR-4273
(Seabrook FP# 101050)
Revision 0
July 2016

QUALITY ASSURANCE DOCUMENT
This document has been prepared, reviewed, and approved in accordance with the Quality Assurance requirements of 10CFR50 Appendix B and/or ASME NQA-1, as specified in the MPR Nuclear Quality Assurance Program.

Prepared by: C. W. Bagley

Reviewed by: John W. Simons

Approved by: James E. Moroney

Additional Contributors

R. Vayda
A. Card

Prepared for

NextEra Energy Seabrook
P. O. Box 300; Lafayette Rd. Seabrook, NH 03874

RECORD OF REVISIONS

Revision	Affected Pages	Description
0	All	Initial Issue

Acknowledgements

This report documents large-scale test programs conducted to support evaluation of the impact of alkali-silica reaction on reinforced concrete structures at Seabrook Station. The test programs were a collaborative effort between MPR Associates and the Ferguson Structural Engineering Laboratory (FSEL) (which is part of The University of Texas at Austin). These programs required a large team of engineers and researchers, and countless man-hours over a four-year period. Successful completion of such an ambitious project is a testament to the dedication, commitment, and technical contributions of the entire MPR/FSEL team, and active engagement and support by NextEra Energy.

The individual team members from each organization are acknowledged below:

NextEra Energy
Brian Brown
Michael Collins
Richard Noble
Theodore Vassallo

MPR Associates
Christopher Bagley
Amanda Card
Scott Eisele
Benjamin Frazier
Tom King
James Moroney
Kathleen Mulvaney
Monique Neaves
John Simons
Robert Vayda

University of Texas at Austin
Gloriana Arrieta-Martinez
Morgan Allford
John Bacon
Oguzhan Bayrak
Katelyn Beiter
Michael Brown
Nicholas Dassow
Anthony Defurio
Dean Deschenes
Anthony Dondrea
Daniel Elizondo
Dennis Fillip
Joe Klein
Richard Klingner
Cody Lambert
Alissa Neuhausen
Joshua Ramirez
Daniel Sun
David Wald
Sara Watts
Heather Wilson
Hossein Yousefpour
Elizabeth Zetzman

Executive Summary

On behalf of NextEra, MPR directed several large-scale test programs to investigate the structural impact of alkali-silica reaction (ASR) on reinforced concrete specimens. The test programs involved fabrication and testing of [redacted] large-scale test specimens that were designed to represent reinforced concrete structures at Seabrook Station and testing of two ASR-affected bridge girders. Testing included [redacted] anchor capacity tests, [redacted] shear load tests, [redacted] flexural load tests, and evaluation of [redacted] instrument configurations (total of [redacted] instruments) for monitoring through-thickness expansion. This report integrates the conclusions of those studies to present the implications for structural assessments and monitoring of reinforced concrete structures at the plant, as follows:

- ASR causes expansion of affected concrete that initially proceeds in all directions regardless of reinforcement configuration. The two-dimensional reinforcement mats in the test specimens confined expansion in the plane of the reinforcement mats (i.e., the in-plane directions) after [redacted]% expansion. Subsequent expansion was primarily in the through-thickness direction. The reinforcement configuration of the test specimens reflects Seabrook Station structures. Accordingly, in-plane expansion measurements at Seabrook are sufficient for monitoring ASR progression until expansion reaches [redacted]%, after which through-thickness expansion measurements are necessary.

- The Combined Cracking Index (CCI) methodology (and the Seabrook Station procedure, in particular) provides a reasonable approximation of true engineering strain and is an acceptable methodology for in-plane expansion monitoring.

- Snap ring borehole extensometers (SRBEs) provide an accurate and reliable methodology for monitoring through-thickness expansion from the time the SRBE is installed.

- To determine total through-thickness expansion, NextEra will also need to identify the through-thickness expansion before the SRBE is installed. The test programs identified that elastic modulus is sensitive to ASR degradation and provides a repeatable correlation with through-thickness expansion. Through-thickness expansion determined from the empirical correlation may be added to the SRBE-determined expansion to calculate the total through-thickness expansion. (See MPR-4153 for details.)

- Results from the Anchor Test Program indicate that there is no reduction in anchor capacity in ASR-affected concrete with in-plane expansion levels of less than [redacted] mm/m ([redacted]%). Because in-plane expansion of fabricated test specimens plateaued at [redacted]% expansion, anchor testing was performed on two ASR-affected bridge girders to investigate anchor performance at higher expansion levels. Anchor capacity is insensitive to through-thickness expansion and time of installation relative to ASR expansion (i.e., installed before or after the onset of expansion).

- Results from the Shear Test Program indicate that there is no reduction of shear capacity in ASR-affected concrete with through-thickness expansion levels up to [redacted]%, which was the

maximum ASR expansion level exhibited by shear test specimens. (Test results show that the shear capacity actually increases due to pre-stressing from ASR expansion, but MPR recommends that this "benefit" should not be credited.)

- Results from the Reinforcement Anchorage Test Program indicate that there is no reduction in the performance of reinforcement lap splices in ASR-affected concrete with through-thickness expansion levels up to [redacted]%, which was the maximum ASR expansion level exhibited by reinforcement anchorage test specimens.

- The progression of ASR in the reinforcement anchorage test specimens resulted in a notable change in stiffness, characterized by a decrease in deflection at yield. The increase in stiffness is due to pre-stressing from ASR expansion.

A companion report (MPR-4288, "Seabrook Station: Impact of Alkali-Silica Reaction on the Structural Design Basis") describes the effect of ASR on the structural design basis of affected structures at Seabrook Station and provides guidance for evaluations of those structures. Content from this report provides evaluation criteria for selected limit states (shear, reinforcement anchorage, anchor capacity).

Execution of a multi-year large-scale test program to support evaluation of ASR-affected reinforced concrete structures is unique in the nuclear industry in purpose, scale, and methodology. Application of the results of the FSEL test programs requires that the test specimens be representative of reinforced concrete at Seabrook Station, and that expansion behavior of concrete at the plant be similar to that observed in the test specimens. Test specimen design addressed representativeness of the test specimens, and promoted expansion behavior consistent with the plant (e.g., use of two-dimensional reinforcement mats). To confirm that expansion behavior at Seabrook Station is similar to the FSEL test specimens, this report recommends that NextEra perform the checks identified in the table below.

Recommendations for Confirming Expansion Behavior at Seabrook Station is Similar to Test Programs

Objective	Recommended Approach	When
Ongoing Monitoring		
Expansion within limits from test programs	Compare measured in-plane expansion (ε_{xy}) and through-thickness expansion (ε_z) at the plant to limits from test programs ($\varepsilon_{xy} \leq$ [redacted]% and $\varepsilon_z \leq$ [redacted]%)	Intervals as specified in Structures Monitoring Program (SMP) or Aging Management Program (AMP)
Lack of mid-plane crack	Inspect cores removed from ASR-affected structures (and boreholes) for evidence of mid-plane cracks	When cores are removed to install extensometers or for other reasons.
Periodic Confirmation of Expansion Behavior		
Lack of mid-plane crack	Review of records for cores removed to date or since last assessment	Periodic assessments • At least 5 years prior to the Period of Extended Operations (PEO) • Every 10 years thereafter
Expansion initially similar in all directions but becomes preferential in z-direction	Compare ε_{xy} to ε_z using a plot of ε_z versus Combined Cracking Index (CCI)	
Expansions within range observed in test programs	Compare measured ε_{xy} and ε_z at the plant to limits from test programs ($\varepsilon_{xy} \leq$ [redacted]% and $\varepsilon_z \leq$ [redacted]%) to check margin for future expansion	
	Compare measured volumetric expansion to range from beam test programs ([redacted]%) and check margin for future expansion	
Corroborate modulus-expansion correlation with plant data	For 3 extensometer locations with pre-instrument ε_z in the range of [redacted]% to [redacted]% (e.g., [redacted]%, [redacted]% and [redacted]%): • Remove cores for modulus testing at extensometer locations with more significant changes in extensometer readings. • Compare $\Delta\varepsilon_z$ determined from the modulus-expansion correlation with $\Delta\varepsilon_z$ determined from the extensometer	At least 2 years prior to PEO

Contents

1 Introduction 1-1

1.1 Purpose 1-1

1.2 Background 1-1

1.3 Commercial Grade Dedication 1-4

1.4 Report Scope 1-4

2 Selection of Approach for Test Programs 2-1

2.1 Summary of Literature Review 2-1

2.2 Importance of Confinement 2-2

2.3 Available Structural Test Data 2-4

2.4 Test Program Considerations 2-5

3 Test Specimen Configuration 3-1

3.1 Fabricated Test Specimens 3-1

3.2 Girder Test Specimens 3-3

4 Characterizing ASR Development 4-1

4.1 Methods for Determining ASR Development 4-1

4.2 Expansion Monitoring 4-2

4.3 Material Properties 4-8

4.4 Petrography 4-10

4.5 Conclusions 4-12

5 Test Results 5-1

5.1 Anchor Testing 5-1

5.2 Shear Testing 5-5

5.3 Reinforcement Anchorage Testing 5-10

5.4 Instrumentation Testing 5-15

6 Implications for Seabrook Station 6-1

6.1 Expansion 6-1

6.2 Structural Performance 6-3

Contents (cont'd.)

7 References 7-1

A Test Specimens A-1

B Guidelines for Periodic Expansion Behavior Check B-1

Tables

Table 1-1. Summary of Support Documentation 1-5

Table 2-1. Comparison of Test Specimen Approaches 2-6

Table 3-1. Comparison of Fabricated Test Specimens 3-2

Table 5-1. Proof-of-Concept Testing for Shear Retrofit 5-8

Table 5-2. Proof-of-Concept Testing for Reinforcement Anchorage Retrofit 5-15

Figures

Figure 1-1. ASR Expansion Mechanism 1-1

Figure 1-2. Activities for Evaluating Structural Capacity of ASR-Affected Structures 1-2

Figure 2-1. Effect of Confinement on ASR-affected Concrete 2-3

Figure 2-2. Representativeness of Information Sources for Evaluating Structural Performance 2-7

Figure 4-1. ASR-related Expansion in Specimen [redacted] 4-2

Figure 4-2. Large Crack from Surface Between Reinforcement Mats 4-4

Figure 4-3. Expansion Profile of Specimen [redacted] (as Measured with the Z-Frame) 4-5

Figure 4-4. Expansion Behavior of Test Specimens 4-6

Figure 4-5. Normalized Compressive Strength of Test Specimens 4-9

Figure 4-6. Normalized Elastic Modulus of Test Specimens 4-9

Figure 4-7. DRI (Traditional and Modified) vs. Through Thickness Expansion 4-11

Figure 4-8. VAR vs. Through Thickness Expansion 4-11

Figure 5-1. Kwik Bolt 3 Anchor Test Results 5-3

Figure 5-2. Shallow Drillco Maxi-Bolt Anchor Test Results 5-4

Figure 5-3. Full-Depth Drillco Maxi-Bolt Anchor Test Results 5-4

Figure 5-4. Test Setup for [redacted]-inch Shear Test Specimens (Elevation View) 5-6

Figure 5-5. Normalized Shear Stress-Deflection Plots for [redacted]-inch Shear Test Specimens 5-7

Figure 5-6. Test Setup for Reinforcement Anchorage Test Specimens (Elevation View) 5-10

Figure 5-7. Load-deflection Plots for Selected Reinforced Anchorage Test Specimens 5-11

Figure 5-8. Initial Part of Load Deflection Plot for Reinforcement Anchorage Control Specimen 5-12

Figure 5-9. Effect of ASR-Related Expansion on Initial Flexural Stiffness 5-13

Figures (cont'd.)

Figure 5-10. Effect of ASR-Related Expansion on Service Level Flexural Stiffness 5-14

Figure 5-11. Comparison of SRBE Instrument Measurements with Depth Gauge Measurements 5-17

Figure 5-12. Illustration of SRBE during Installation 5-18

Figure A-1. Photo of Girder Series Anchor Test Specimen A-2

Figure A-2. Photo of Block Series Anchor Test Specimen with Anchors Installed A-2

Figure A-3. Diagram of Block Series Anchor Test Specimen Showing Reinforcement A-3

Figure A-4. Diagram of 24-Inch Shear Test Specimen Showing Reinforcement A-4

Figure A-5. Diagram of Reinforcement Anchorage Test Specimen Showing Reinforcement... A-5

Figure A-6. Diagram of Instrumentation Test Specimen Showing Reinforcement (Elevation View) A-6

Figure A-7. Diagram of Instrumentation Test Specimen Showing Reinforcement (Plan View) A-6

Figure B-1. Volumetric Expansion Check Criterion B-3

Figure B-2. Expansion Direction Trend Chart B-4

1 Introduction

1.1 PURPOSE

On behalf of NextEra, MPR directed several large-scale test programs to investigate the structural impact of Alkali Silica Reaction (ASR) on reinforced concrete specimens. This report integrates the conclusions of those studies to present the implications for structural assessments and monitoring of reinforced concrete structures at the plant.

1.2 BACKGROUND

1.2.1 Alkali-Silica Reaction

ASR occurs in concrete when reactive silica in the aggregate reacts with hydroxyl ions (OH^-) and alkali ions (Na^+, K^+) in the pore solution. The reaction produces an alkali-silicate gel that expands as it absorbs moisture, exerting tensile stress on the surrounding concrete and resulting in cracking. Typical cracking caused by ASR is described as "pattern" or "map" cracking and is usually accompanied by dark staining adjacent to the cracks. Figure 1-1 provides an illustration of this process.

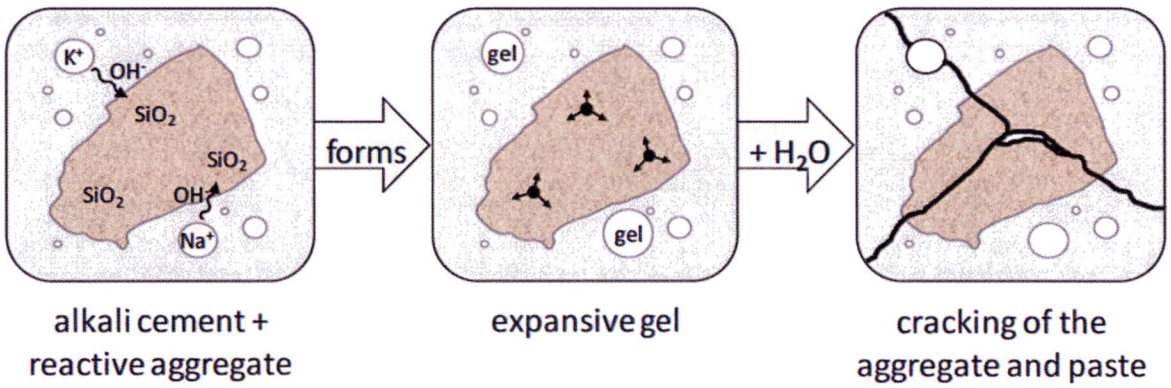

Figure 1-1. ASR Expansion Mechanism

The cracking may degrade the material properties of the concrete, necessitating an assessment of the adequacy of the affected structures and supports anchored to the structures.

1.2.2 ASR at Seabrook Station

NextEra has identified ASR in multiple safety-related, reinforced concrete structures at Seabrook Station (Reference 1.1). After an extent of condition determination that identified potentially

affected structures at the site, MPR performed an interim structural assessment (Reference 2.1) of selected ASR-affected structures to evaluate their adequacy given the presence of ASR. Based on the low level of observed cracking and the apparent slow rate of change, MPR concluded that these structures are suitable for continued service for at least an interim period (i.e., at least several years).

The interim structural assessment (Reference 2.1) utilized a conservative treatment of data from existing literature, supplemented by limited testing of anchor bolts, to produce conclusions suitable for a short-term structural assessment. NextEra will perform follow-up evaluations to assess the long-term adequacy of the concrete structures and attachments at Seabrook Station. In support of these evaluations, MPR conducted large-scale test programs of specimens that were designed and fabricated to represent reinforced concrete at Seabrook Station to the maximum extent practical. Results from the large-scale test programs provide input to determine the potential effects of ASR on adequacy of structures at Seabrook Station.

Because the design codes for Seabrook Station do not include provisions for ASR, NextEra is submitting a License Amendment Request (LAR) to incorporate a methodology for evaluating ASR-affected structures into the plant's licensing basis. This report provides the technical basis for portions of the LAR that were developed from the results of the large-scale test programs.

Figure 1-2 provides a high-level summary of the key activities of the ASR project at Seabrook Station related to evaluation of structural capacity of ASR-affected structures[1].

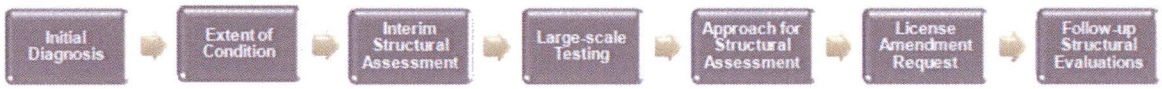

Figure 1-2. Activities for Evaluating Structural Capacity of ASR-Affected Structures

1.2.3 Test Programs at FSEL

MPR directed four test programs at the Ferguson Structural Engineering Laboratory (FSEL) at The University of Texas at Austin (UT-Austin) to support NextEra's efforts to resolve the ASR issue identified at Seabrook Station. Three of the test programs focused on the structural performance data necessary to complete the follow-up structural evaluations of ASR-affected structures. The fourth test program evaluated instruments for monitoring expansion at Seabrook Station.

In each structural test program, ASR developed in the fabricated test specimens and was routinely monitored so that testing could be performed at particular levels of ASR distress. This approach enabled systematic development of trends for structural performance with the

[1] The LAR will include the methodology for the final structural assessment; the actual assessment may be completed after submittal of the LAR.

progression of ASR. The resulting data sets were a significant improvement upon the collection of published literature sources, because test data across the range of ASR distress levels were obtained using a common methodology and identical test specimens.

A brief overview of each test program is provided below.

- Anchor Test Program – This test program evaluated the impact of ASR on performance of expansion anchors and undercut anchors installed in concrete. Test specimens included [redacted] large-scale blocks that were designed and fabricated to represent the reinforced concrete structures at Seabrook Station and two sections of a reinforced concrete bridge girder that was available at FSEL. The test program consisted of a total of [redacted] anchor tests. (Reference 4.1)

- Shear Test Program – This test program evaluated the impact of ASR on shear capacity of reinforced concrete specimens. Three-point load tests were performed on large-scale beams that were designed and fabricated to represent the reinforced concrete structures at Seabrook Station. FSEL fabricated [redacted] shear test specimens and conducted a total of [redacted] tests (two tests performed on most specimens). (Reference 4.2)

- Reinforcement Anchorage Test Program – This program evaluated the impact of ASR on reinforcement anchorage of rebar lap splices embedded in concrete and also provided insights on flexural strength and stiffness. Four-point load tests were performed on large-scale beams that were designed and fabricated to represent the reinforced concrete structures at Seabrook Station. FSEL fabricated [redacted] reinforcement anchorage test specimens and conducted a total of [redacted] tests (one test per specimen). (Reference 4.2)

- Instrumentation Test Program – This program evaluated instruments for the measurement of through-thickness expansion. Insights gained from this program were used to select which instrument to use at Seabrook Station and to refine installation procedures. The test specimen was a large-scale reinforced concrete beam that was designed and fabricated to represent reinforced concrete structures at Seabrook Station. Testing included a total of [redacted] instruments over [redacted] different configurations. FSEL periodically monitored expansion using these instruments for one year. (Reference 4.3)

1.2.4 Additional Testing

The Anchor, Shear, Reinforcement Anchorage, and Instrumentation Test Programs were designed to produce data that would ultimately be used as inputs for safety-related evaluations at Seabrook Station. Additional testing was performed to inform decisions on directing these test programs and provide insights that help interpret test program results.

Expansion Behavior

As part of each test program, expansion of the test specimens was monitored in a variety of ways to characterize ASR progression. An additional study was performed outside the scope of the test programs that focused on monitoring the total axial and volumetric expansion of concrete cubes with varying reinforcement layouts, reinforcement density, and concrete mix designs.

This additional study provides insights on the factors for expansion behavior and their relative importance. (Reference 6.1)

Retrofit Testing

For the Shear and Reinforcement Anchorage Test Programs, the original intent was to develop ASR and perform tests until a threshold for ASR distress was identified where structural performance declined. FSEL would then install retrofits to specimens at higher ASR levels (e.g., by installing grouted rods to function like shear reinforcement) and perform load testing to qualify a repair methodology. Proof-of-concept testing of candidate retrofits was performed using specimens that were not affected by ASR[2]. (References 6.2 & 6.3)

Uniform Load Testing

The load test setup for the Shear Test Program used a hydraulic ram and two beam supports to apply three-point loading. Use of point loads is convenient, but a uniform distribution would be more representative of the loads applied to some actual structures (e.g., hydrostatic loading on the exterior surface of a below-grade wall). FSEL performed uniform load shear testing on specimens with a design comparable to the specimens for the Shear Test Program to assess the difference in shear capacity for the different loading conditions. The load test setup for the uniform load tests applied force using an air bladder to exert uniform pressure to the underside of each specimen. (References 6.4 & 6.5)

1.3 Commercial Grade Dedication

The test programs were performed by FSEL with technical direction and quality assurance oversight from MPR. The testing was governed by MPR test specifications (References 3.1 & 3.2) and was conducted under FSEL's project-specific quality system manual using test procedures approved by MPR. MPR commercially dedicated the testing services performed by FSEL and prepared Commercial Grade Dedication (CGD) Reports for the Anchor, Shear, Reinforcement Anchorage, and Instrumentation Test Programs (References 5.1, 5.2, 5.3, & 5.4).

The additional studies on expansion behavior of concrete cubes, retrofit testing on non-ASR affected specimens, and uniform load distribution were not commercially dedicated. Conclusions from these efforts inform the overall project, but were not used to develop quantitative inputs for evaluation of structures at Seabrook Station.

1.4 Report Scope

This report combines the key conclusions from the four test programs, results from the additional testing studies, and information gathered as part of MPR's overall investigation of ASR at Seabrook Station to provide integrated conclusions that support NextEra's follow-up structural evaluations and monitoring of ASR-affected reinforced concrete. Detailed information on the specimen designs, test methods, and test results are provided in the test program reports (References 4.1, 4.2, & 4.3), which provide complete documentation of the test programs.

[2] Ultimately, the retrofits were not tested on ASR-affected specimens, because structural testing of ASR-affected specimens without retrofits did not identify a decrease in structural performance for the ASR levels that were achievable within the duration of the test programs.

Further information on the additional testing studies is provided in UT-Austin documents (References 6.1, 6.2, 6.3, 6.4, & 6.5).

Table 1-1 summarizes the primary source documentation for test results from the MPR/FSEL test programs.

Table 1-1. Summary of Support Documentation

Test Program	Test Reports	CGD Reports
Anchor	MPR-3722 (Reference 4.1)	MPR-3726 MPR-4247 MPR-4286 (References 5.1, 5.2, & 5.4)
Shear	MPR-4262 (Reference 4.2)	MPR-4259 MPR-4286 (References 5.3 & 5.4)
Reinforcement Anchorage		
Instrumentation	MPR-4231 (Reference 4.3)	
Information Only	UT-Austin Documentation (References 6.1, 6.2, 6.3, 6.4, & 6.5)	N/A

A companion report (MPR-4288, "Seabrook Station: Impact of Alkali-Silica Reaction on the Structural Design Basis") describes the effect of ASR on the structural design basis of affected structures at Seabrook Station and provides guidance for evaluations of those structures.

2 Selection of Approach for Test Programs

This section highlights the reasons for pursuing large-scale test programs and summarizes the rationale for key decisions that shaped and focused the approach for testing. These key decision points were as follows:

- Focus on structural testing to capture the interplay between ASR expansion and the restraint provided by the reinforcement (i.e., confinement).
- Address limit states of interest for structures at Seabrook Station where there were limitations or gaps in the available literature, especially where available margins are low or the apparent effect of ASR is high.
- Use laboratory-prepared test specimens to facilitate separate effects studies to determine the impact of ASR on structural performance as a function of the severity of ASR.
- Ensure results are applicable to structures at Seabrook Station by designing specimens to be representative and using test approaches consistent with those used to calibrate the code equations.

The decisions that defined the test program were informed by a comprehensive review of literature on ASR degradation and its impacts on structural performance. The literature review and the key decision points are discussed below.

2.1 Summary of Literature Review

As part of developing the approach for addressing ASR-affected concrete at Seabrook Station, MPR conducted a comprehensive review of published research on the structural implications of ASR and industry guidance for evaluating ASR-affected structures. Most research on ASR has focused on the science and kinetics of ASR, rather than engineering research on structural implications. Structural testing of ASR-affected test specimens has been performed, but application of the conclusions to a specific structure can be challenged by lack of representativeness.

Industry guidelines from the Institution of Structural Engineers (Reference 1.2) and the Federal Highway Administration (Reference 1.3) provide a summary of potential implications of ASR and high level information that MPR used to identify focus areas for addressing ASR at Seabrook Station. MPR's literature review included over a hundred detailed references to explore approaches for evaluating ASR-affected structures. These efforts led to the initial series of actions at Seabrook Station including petrographic examinations to confirm the presence of ASR, extent of condition walkdowns that utilized crack width summation to quantitatively

characterize the effect of ASR, and development of a protocol for monitoring further development of ASR during the ongoing project.

The literature also established the expectation for a reduction in material properties of cores from ASR-affected concrete, and identified that such a reduction does not necessarily reflect a corresponding decrease in structural capacity. The presence of two-dimensional reinforcement mats at Seabrook Station provides confinement that differentiates structural performance from un-reinforced concrete structures (e.g., dams) that are more appropriately represented by cores. ASR-induced expansion in reinforced concrete has a "prestressing" effect that mitigates loss of structural capacity.

A focused review of published research on the structural implications of ASR (Reference 2.2) identified dozens of technical references on testing of ASR-affected concrete. The most relevant references were used to support the interim structural assessment for Seabrook Station by providing a conservatively bounding capacity reduction factor for structural limit states (e.g., shear) to account for the presence of ASR. For these technical papers, Reference 2.2 discussed the extent to which the experimental design and test specimens were representative of structures with two-dimensional reinforcement (like structures at Seabrook Station). For completeness, Reference 2.2 also identified testing of ASR-affected concrete that was poorly representative of Seabrook Station and why it should not be used for a structural evaluation.

2.2 IMPORTANCE OF CONFINEMENT

The presence of confinement is a central factor for the effect of ASR on structural performance. Reinforcing steel, loads on the concrete structure (e.g., deadweight), and the configuration of the structure (i.e., restraint offered by the structural layout) provide confinement that restrains in-situ expansion of the ASR gel and limits the resulting cracking in concrete. Structural testing of full-scale specimens simulates the in-situ confinement and therefore provides much more representative results than simpler approaches that do not account for confinement (e.g., material property testing).

Confinement limits ASR expansion of the in-situ structure, which reduces the extent of deleterious cracking and the resultant decrease in structural performance. Publicly available test data for structural performance of ASR-affected structures indicate a significant difference in results when adequate confinement is present. As an example, test data show that the one-way shear capacity of a specimen containing three-dimensional reinforcement was not significantly affected by ASR, but specimens without such reinforcement exhibited loss of capacity by up to 25% (References 1.4 & 1.5).

The difference in structural performance observed in published test data with varying degrees of confinement results from a "prestressing" effect. When reinforcement is present to restrain the tensile force exerted by ASR expansion, an equivalent compressive force develops in the concrete. If loads applied on the structure result in tensile stresses (direct, diagonal, or otherwise), the compressive stresses in the concrete must be completely overcome before additional tensile load is reacted by the reinforcement. Cracking in confined concrete would not occur until the tensile stress in the concrete exceeds the compressive stress in the concrete from the prestressing effect. The prestressing effect does not reduce the ultimate tensile capacity of

the reinforcement. In some cases, literature indicates that the prestressing effect of ASR creates a stiffer structural component with a higher ultimate strength than an unaffected member[3]. Test data show that this prestressing effect applies even when ASR expansion has yielded the reinforcing bars. (Reference 1.5)

Given the interplay between ASR-induced cracking and structural restraint, it is imperative that evaluation of the structural impacts due to ASR focus on structural testing rather than material property testing of cores removed from the structure. The concrete prestressing effect is only present when the expansion is confined. If the concrete is removed from the stress field, the concrete prestressing effect is lost. A core sample from an ASR-affected, reinforced concrete structure will not be confined by the stresses imparted by the reinforcement and surrounding concrete after it is removed from the structure. Therefore, such a core is not representative of the concrete within its structural context. Measured mechanical properties from a core taken from a confined ASR-affected structure have limited applicability to in-situ performance; such results only represent the performance of an unconfined or unreinforced structure.

Figure 2-1 illustrates the effect of confinement with photographs of two surfaces of the same ASR-affected, reinforced concrete beam[4].

Confined Face of ASR-affected Beam (left); Unconfined face of Same ASR-affected Beam (right)

Figure 2-1. Effect of Confinement on ASR-affected Concrete

Based on the importance of the prestressing effect on structural performance, the typical approach of re-evaluating structural calculations using updated material properties from cores

[3] The planned approach for structural evaluations at Seabrook Station (MPR-4288) does not credit the possibility that ASR could increase the ultimate strength of the member in question.

[4] The beams shown in Figure 2-1 are not from the MPR/FSEL large-scale test programs.

would not be representative of structures at Seabrook Station. Instead, evaluations need to rely on structural test data of ASR-affected reinforced concrete.

2.3 Available Structural Test Data

The interim structural assessment considered the various limit states for reinforced concrete (e.g., shear, reinforcement anchorage) and applied capacity reduction factors based on data in publicly available literature. However, determination of appropriate reduction factors was limited by the poor representativeness of available data for ASR-affected concrete with reinforcement comparable to structures at Seabrook Station (i.e., two-dimensional reinforcement mats).

2.3.1 Shear Capacity

The interim structural assessment (Reference 2.1) assumed a strength reduction of 25% for out-of-plane shear (References 1.4 & 1.6), but this was a conservative treatment that is not necessarily representative of the expected performance of the walls at Seabrook Station.

- The available data on out-of-plane shear show a range of impacts from a reduction of 25% to a gain of 12% (Reference 1.4). Use of the 25% reduction for a structural assessment is on the conservative edge of the range.

- The shear capacity reduction due to ASR of 25% is based on small-scale testing using 5-inch × 3-inch beams (Reference 1.6). It is well known that shear test results do not scale well. In fact, the study that generated the results suggesting a 25% reduction specifically noted that the small test specimens likely exaggerated the deleterious effect of ASR, because the depth of ASR cracks is relatively greater in smaller specimens.

The literature review (Reference 2.2) included published research on large-scale testing, such as the research that had been performed at the Delft University of Technology on test specimens that had been recovered from an existing bridge deck that exhibited ASR (Reference 1.8). MPR concluded that these tests were less representative than the smaller scale laboratory tests discussed above. In the example of the Delft University study, test specimens included significant differences in configuration relative to structures at Seabrook Station. Specifically, the bridge deck had plain reinforcement (i.e., no deformation) with a low yield strength (approximately 30 ksi) and the specimens required extensive laboratory retrofit to generate a shear failure. In addition, the process of harvesting a specimen from an existing structure inherently results in damage that affects the results (see Section 2.4.1 for additional discussion).

2.3.2 Reinforcement Anchorage

The interim structural assessment (Reference 2.1) assumed a strength reduction of 40% for reinforcement lap splices in ASR-affected concrete (Reference 1.9), but this was a conservative treatment that is not necessarily representative of the expected performance at Seabrook Station.

- While the study producing an average strength reduction of 40% was the most relevant for the reinforcement anchorage limit state without transverse reinforcement, this study was

based on a rebar pullout test method that is outdated and known to be unrealistic. In a rebar pullout test, the rebar is placed in tension and the concrete is placed in compression. This stress state is much different than the service condition for most reinforced concrete members, in which both the rebar and the surrounding concrete are in tension. Accordingly, a report from the ACI Technical Committee 408 stated that the rebar pullout method is "inappropriate and not recommended." (Reference 1.10)

- Testing performed for the study showing a 40% strength reduction used reinforcing steel significantly smaller (#5 bars) than the reinforcement in structures at Seabrook Station (typically #8 bars or larger for safety-related structures).

2.3.3 Anchor Capacity

Review of publicly available literature did not identify test data on capacity of anchors or shallow embedments in ASR-affected concrete (Reference 2.2).

For the interim structural assessment, MPR conducted testing on an ASR-affected bridge girder to provide a basis for the potential degradation.

2.3.4 Conclusion

While the literature review and girder testing provided information to support the interim structural assessment, it also highlighted that the state of knowledge on ASR did not include test data that were closely representative of reinforced concrete structures at Seabrook Station. Therefore, NextEra commissioned MPR to conduct testing to provide more representative data that would support follow-up structural evaluations.

2.4 TEST PROGRAM CONSIDERATIONS

2.4.1 Test Specimen Approach

Large-scale structural testing of ASR-affected concrete typically involves specimens that are either harvested from existing ASR-affected structures or fabricated using constituents that accelerate ASR development. Table 2-1 summarizes the differences between these approaches.

Table 2-1. Comparison of Test Specimen Approaches

Harvested Specimens	Fabricated Specimens
Advantages • ASR developed along a timescale that represents an actual structure • Does not require capability to fabricate specimens and store specimens while ASR is developing	Advantages • Allows precise control of test variables, which permits separate effects testing where there is only one variable (e.g., ASR level) • Enables aging beyond currently-exhibited ASR levels • Common basis for ACI Code provisions
Disadvantages • The harvesting process may damage the test specimens and affect results • Range of testing is limited by currently-exhibited ASR levels	Disadvantages • ASR development is much faster than for actual structures

Specimens for the MPR/FSEL test programs were fabricated by FSEL so that the impact of ASR could be determined as a function of its severity, including levels of ASR expansion beyond those currently seen at Seabrook Station. The fabricated test specimens were designed with a reinforcement configuration and concrete mixture that represented structures at Seabrook Station to the maximum extent practical.

Using fabricated test specimens avoids the process of cutting out a section of reinforced concrete and transporting it to the laboratory, which results in damage that affects the test results. Specifically, the newly cut concrete surfaces would be subject to rapid expansion due to stress relaxation in the absence of the structural context. Additionally, cutting of rebar precludes its full development under loading, which also reduces representativeness. Design features of fabricated test specimens ([redacted]) can restore a portion of the continuity that represents the original structure, thereby making the test results more representative of true structural performance. For these reasons, published research using harvested test specimens (e.g., the Delft University study, Reference 1.8) was avoided, and structural tests relied primarily on fabricated specimens.

NextEra and MPR considered harvesting samples from the canceled Unit 2 at Seabrook Station, but ultimately decided against this approach. In addition to the damage incurred during the harvesting process, samples from Unit 2 would only be able to represent ASR-affected concrete to currently-observed expansion levels at Unit 2. Accelerated aging was an essential element of the MPR/FSEL test programs, because the results needed to address ASR-induced expansion that could occur in the future.

2.4.2 Representativeness Objectives of Test Programs

MPR designed test programs for NextEra to evaluate shear capacity, reinforcement anchorage, and anchor capacity with the following key features:

- Large size to represent the scale of structures at Seabrook Station
- Experimental design that is consistent with the design basis of Seabrook Station and accepted in the concrete industry
  - Test methods and experimental setups for shear and reinforcement anchorage testing are consistent with those used for tests that calibrate ACI Code equations
  - Test methods for anchor capacity testing are consistent with those performed in response to NRC IE Bulletin 79-02 (Reference 2.3)
- Specimen design that uses a reinforcement configuration and concrete mixture design that reflects reinforced concrete structures at Seabrook Station
- Presence of ASR to an extent that is consistent with levels currently observed at Seabrook Station and at levels that could be observed in the future

Additional details on these features are provided in the subsequent sections of this report.

Figure 2-2 presents various sources of information and indicates their relative representativeness for evaluating structural performance of ASR-affected reinforced concrete structures at Seabrook Station. The data set obtained as part of the MPR/FSEL test programs is a marked advancement from the collection of published literature sources and forms the definitive technical basis for evaluation of reinforced concrete structures at Seabrook Station for the applicable limit states.

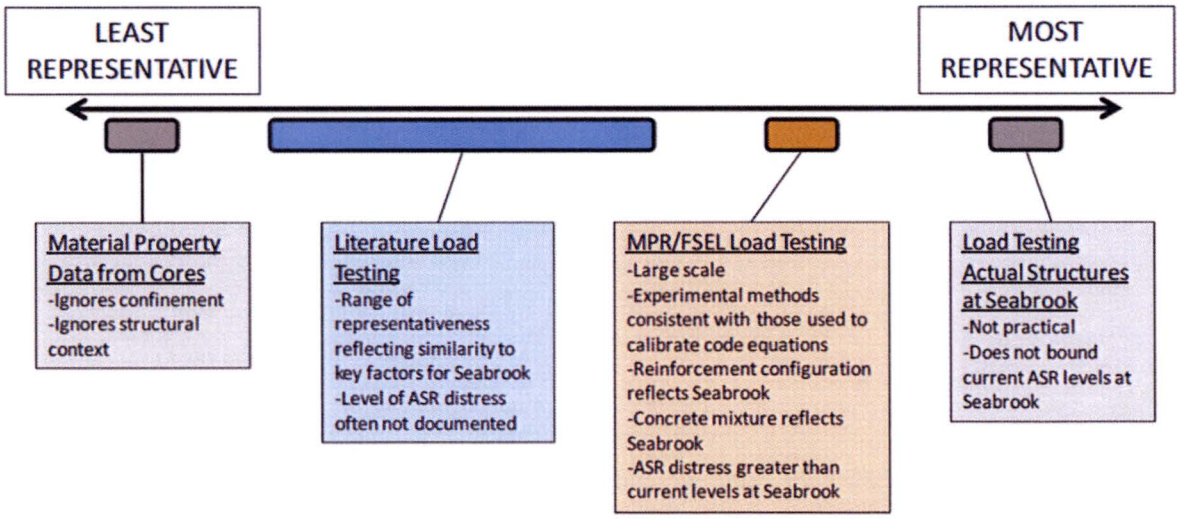

Figure 2-2. Representativeness of Information Sources for Evaluating Structural Performance

3 Test Specimen Configuration

Development of ASR in concrete and symptoms of ASR that can be used to monitor the condition of the concrete are strongly influenced by the design of the affected member. The large-scale test programs used specimens that represented reinforced concrete structures at Seabrook Station to the greatest extent practical. Fabricated test specimens were designed to incorporate specific features to maximize representativeness, while the bridge girder was selected for anchor testing because it contained high levels of ASR distress. Content in this section is drawn from References 3.3, 4.1, 4.2, and 4.3.

3.1 Fabricated Test Specimens

3.1.1 General Description

Test specimens designed and fabricated for the test programs incorporated several key characteristics that provide strong representativeness to Seabrook Station, as follows:

- Reinforcement configuration of two-dimensional rebar mats with comparable reinforcement ratios to the plant in each in-plane direction
- Clear cover above reinforcement mats consistent with the plant. For the Shear, Reinforcement Anchorage, and Instrumentation Test Programs, the specimen design specified cover of 2 inches on the side representing the interior surface and 3 inches on the side representing the exterior surface. For the Anchor Program, the specimen design specified clear cover of 2 inches on both sides, which enabled installation and testing of anchors on both sides of the test specimen. Anchors of interest at Seabrook Station are installed on interior surfaces, so the presence of 3 inches of cover on the opposite wall face to simulate the exterior surface was not necessary.
- [redacted]
- [redacted]
- [redacted]
- Large overall size (see Table 3-1 for dimensional summary)

The concrete mixture design for the fabricated test specimens included highly reactive fine aggregate [redacted], which accelerated development of ASR. The shear, reinforcement anchorage, and instrumentation specimens also included reactive coarse aggregate and cement with high alkali content. In this manner, the test specimens could reach

levels of ASR beyond that observed at Seabrook Station after only a short time of conditioning (i.e., maximum of 2.5 years for these test programs).

To the extent practical, concrete constituents were obtained from sources that were consistent with concrete at Seabrook Station. [redacted]

3.1.2 Differences Between Specimens

The different purposes of the test programs necessitated dimensional differences between the fabricated test specimens. Table 3-1 below summarizes selected parameters of interest and the associated differences. Appendix A contains photographs, diagrams, and drawings of the test specimens.

Table 3-1. Comparison of Fabricated Test Specimens

Parameter	Anchor Block Specimens	Reinforcement Anchorage Specimens	24-inch Shear Specimens	Instrument Specimen
Height	[redacted]	[redacted]	[redacted]	[redacted]
Width	[redacted]	[redacted]	[redacted]	[redacted]
Length	[redacted]	[redacted]	[redacted]	[redacted]
Presence of Lap Splice	No	Yes	No	No
Vertical Rebar Size & Spacing	[redacted]	[redacted]	[redacted]	[redacted]
Horizontal Rebar Size & Spacing	[redacted]	[redacted]	[redacted]	[redacted]
Stirrups Size & Spacing	[redacted]	[redacted]	[redacted]	[redacted]

*Two half-length specimens were fabricated in a single placement

The most significant difference in the specimen configuration relates to the reinforcement ratio in the horizontal direction for the shear specimens. This difference was needed for two reasons: (1) for consistency with the shear test specimens used to derive the concrete contribution to shear strength for the design code and (2) to preclude failure of the test specimen via flexure at loads less than the expected shear capacity. The differences in reinforcement enabled a review of the potential impact of reinforcement ratio on ASR distress level and expansion behavior.

The anchor, shear, and reinforcement anchorage test specimens included transverse reinforcement (i.e., stirrups) outside of the test region to ensure that the test specimen failed in the test region by the desired failure mode. These stirrups also supported constructability. The differences in stirrup configuration enabled a review of the potential impact of confinement at the edges of the specimen on ASR distress and expansion behavior.

3.2 Girder Test Specimens

In addition to the fabricated test specimens, the Anchor Test Program also included testing on ASR-affected bridge girders. These specimens exhibited high levels of in-plane expansion, beyond what was achieved in the fabricated specimens. A bridge girder was used in the initial phase of the Anchor Test Program because it was available for immediate testing, which was necessary to support the interim structural assessment. A second phase of anchor testing used another bridge girder to obtain more test data at higher levels of expansion. The girder contains vertical #4 reinforcing bars spaced at 18 inches with a 1-inch minimum cover. Horizontal prestressing strands are also present at the bottom of the beam.

4 Characterizing ASR Development

The objective of each structural test program was to develop a trend for structural capacity as a function of ASR distress level. Accordingly, it was essential to accurately characterize the extent of ASR development in the test specimens. Routine monitoring of ASR development allowed load tests to be performed at pre-defined levels across the range of ASR distress achieved over the duration of the test programs.

Over the course of routine monitoring, observations on ASR development and expansion behavior informed decision making on the test program and ultimately influenced recommended monitoring practices at Seabrook Station.

This section discusses the efforts from the test programs to characterize ASR development, insights gained from these efforts that affected the course of the test programs, and the implications of key conclusions for structural evaluations and long-term monitoring at Seabrook Station. Content in this section is drawn primarily from References 4.1, 4.2, and 4.3.

4.1 Methods for Determining ASR Development

Several different methods were used to characterize ASR development in the fabricated test specimens:

- Expansion Monitoring - ASR-related expansion is a volumetric effect that results in dimensional changes in all three directions. FSEL monitored expansion on the surfaces adjacent to the reinforcement mats (i.e., the in-plane direction) and in the direction normal to the reinforcement mats (i.e., the through-thickness direction) using several different methods, including crack width summation, measurement of through-specimen embedded rods, and profiling of the specimen thickness in several locations over the specimen height.

- Material Properties - Technical literature identifies that ASR degrades the material properties of the concrete. FSEL tested concrete cylinders fabricated at the same time as the test specimens and cores obtained from the test specimens for compressive strength, elastic modulus, and tensile strength to quantify this degradation.

- Petrography - ASR distress may also be characterized by quantifying observed degradation symptoms in concrete samples. A petrographic examination was performed on a polished sample from a core taken from each test specimen at the time of load testing. The petrographer examined the sample under a microscope to confirm the presence of ASR and to quantify the extent of degradation using the Damage Rating Index (DRI) and Visual Assessment Rating (VAR) methodologies.

For the girder specimens used in the Anchor Test Program, FSEL performed in-plane expansion measurements prior to testing and provided a core to a petrographer to confirm the presence of ASR by petrographic examination[5].

4.2 Expansion Monitoring

4.2.1 Expansion Direction

All test specimens exhibited significantly more pronounced expansion in the through-thickness direction than the in-plane direction. Expansion in the in-plane direction plateaued at low levels, while expansion in the through-thickness direction continued to increase. Figure 4-1 is a plot of expansion for Specimen [redacted] and illustrates this behavior. Expansion behavior in this test specimen is typical of other fabricated test specimens[6].

The blue line represents expansion in the through-thickness direction. FSEL obtained most of these measurements from pins that were embedded in the test specimen during fabrication (open data points). In May 2015, FSEL implemented a more comprehensive approach whereby thickness measurements along the height profile of the specimen were averaged (solid data points). The red and green lines represent expansion in the in-plane directions (horizontal and vertical) obtained using embedded pins. The orange line represents expansion in the in-plane directions from crack width measurement (i.e., cracking index).

[redacted]

Figure 4-1. ASR-related Expansion in Specimen [redacted]

[5] DRI and VAR were not utilized on the girder cores.

[6] Expansion of the girder specimens from the Anchor Program was measured at the time of testing, but was not monitored with time. The instrumentation specimen exhibited comparable in-plane expansion, but through-thickness expansion was strongly influenced by the lack of stirrups on the beam ends (see Section 4.2.5).

At low expansion levels (~[redacted]% to [redacted]%), expansion occurred in all three directions. At higher ASR levels, expansion occurred preferentially in the through-thickness direction.

The difference between in-plane expansion and through-thickness expansion is due to reinforcement detailing and the resulting difference in confinement between the in-plane and through-thickness directions. The reinforcement mats confine expansion in the in-plane directions, whereas the lack of reinforcement in the through-thickness direction allows free expansion. Therefore, expansion occurs preferentially in the through-thickness direction.

4.2.2 Assessment of Combined Cracking Index Methodology

NextEra has been monitoring expansion of ASR-affected concrete at Seabrook Station using crack width measurement (i.e., combined cracking index (CCI)) since 2011. Measurement of concrete expansion can be approximated by crack width summation because concrete has minimal capacity for expansion before cracking. While true engineering strain is represented by the sum of material elongation and crack widths, the crack width term rapidly dominates the overall expansion.

As shown in Figure 4-1, in-plane CCI values agreed closely with the observed expansion from embedded pins in terms of both the trend and magnitude. The expansion values measured using embedded pins are a better measure of true engineering strain because these measurements reflect both material elongation and crack width. However, because of the close agreement with CCI, results from the large-scale test programs for expansion monitoring support use of CCI as an approximation for in-plane expansion.

The procedure used by FSEL personnel to determine CCI was controlled under the FSEL Quality Assurance program and was identical to the procedure used to determine CCI at Seabrook Station. To assess the repeatability of CCI measurements obtained by FSEL personnel, the individual performing CCI at Seabrook Station traveled to FSEL to perform measurements on the test specimens (Reference 2.4). In general, results from this effort were consistent with results obtained by FSEL personnel with an average difference of [redacted] mm/m. For most locations, the results were very close. The most significant difference in the measurements was related to the minimum recording threshold for a crack width. The Seabrook methodology only includes cracks with a width of 0.05 mm/m or greater. Evaluation of the CCI comparison results indicated that different operator judgment of the width of very small cracks resulted in the different CCI values. Where ASR is more significant, cracks are larger and repeatability improves. The threshold for structural evaluations at Seabrook Station is 1.0 mm/m, so measurement variability in the range observed by the CCI comparison study is acceptable.

An important advantage of the CCI methodology for Seabrook Station is that results can be used to approximate total expansion in the in-plane directions since the time of original construction. Other methodologies (e.g., installing reference pins and monitoring change in relative position) only determine expansion since the time of the first measurement, which establishes the baseline.

4.2.3 Large Crack on Specimen Edge

As ASR developed in the test specimens, a large crack was noted in the center of the surfaces of the beam that were between the reinforcement mats. Figure 4-2 is a photograph showing the large crack in one of the beam specimens.

Figure 4-2. Large Crack from Surface Between Reinforcement Mats

This large crack is not representative of expansion behavior of structures at Seabrook Station, which have a network of members that are either cast together or integrally cast with special joint reinforcing details. In an actual structure, a vertical wall with two-dimensional reinforcement will be confined in the through-thickness direction at its intersection with neighboring members (i.e., at the top and bottom with floor and ceiling slabs, at the sides with perpendicular walls, and uniformly along the wall face by the subgrade for below grade external walls). The confinement provided by the network of members in a structure is likely sufficient to preclude large cracks like those seen in the FSEL test specimens.

Sectioning of Test Specimens

To confirm that this large crack was an edge effect that did not compromise the representativeness of the test region, FSEL sectioned the beam cross section (i.e., cut with a saw) to assess the depth of the crack for one anchor test specimen and two shear test specimens (after testing was completed). In all cases, FSEL observed that the large crack penetrated only a few inches into the specimen height.

Although the large crack was an edge effect, it was not clear whether it had affected the ability to measure expansion in the through-thickness direction using the embedded pins (which are shown in Figure 4-2). The large crack concentrated the expansion between the embedded pins, rather than distributing the expansion across the entire specimen width, as would be expected in actual structures at Seabrook Station. Damage incurred to the specimens by the sectioning process and

the immediate expansion after sawing resulting from relaxation of confinement prevented quantitative evaluation of the sectioned specimen.

Expansion Measurements over Specimen Height Profile

FSEL developed a new methodology for measuring expansion in the test specimens that obtained measurements along the entire height of the shear and reinforcement anchorage test specimens using a laboratory-fabricated frame (i.e., the z-frame). The frame fit around a test specimen and enabled repeatable measurements of through-thickness (i.e., z-direction) expansion at nine points along the height of the beam. Figure 4-3 provides a plot showing the expansion profile for Specimen [redacted] using the nine measurement locations. The blue dots and solid line show the nine specific points and the dashed line gives the average value. This plot is typical of the other test specimens.

Figure 4-3. Expansion Profile of Specimen [redacted] (as Measured with the Z-Frame)

The z-frame expansion measurements demonstrated that the expansion measured near the edge of the beam (i.e., where the large crack exists) is consistent with the expansion measured over the entire beam height. Based on the relatively low variation about the mean, the results of the z-frame expansion study confirmed that use of an average value to describe through-thickness expansion of the entire specimen is appropriate.

Crack Development Profile

The z-frame data and the observations from sectioning indicate that while total expansion in the through-thickness direction is consistent across the profile of the test specimen, the cracking behavior is different. These observations suggest that along the specimen edges, expansion is concentrated into a large crack; whereas away from the edges, expansion is distributed into finer cracks along the specimen cross-section. Figure 4-4 illustrates this expansion behavior.

Figure 4-4. Expansion Behavior of Test Specimens

4.2.4 Effect of Reinforcement Ratio on Expansion

Test specimens from all test programs exhibited comparable expansion behavior in the reinforced (i.e., in-plane) directions. The magnitude of ASR-related expansion in each case plateaued at ~[redacted] to [redacted]%. These observations indicate that the differences in reinforcement ratio between the shear test specimens ([redacted]%), the reinforcement anchorage and instrumentation test specimens ([redacted]%), and the anchor test specimens ([redacted]%), did not have a noticeable effect on the expansion behavior of the test specimens. The nature and magnitude of ASR-related expansion is more affected by the direction of the reinforcement than the reinforcement ratio. The test specimens were reinforced in the same direction, and as a result, experienced similar directionality in ASR-related expansion.

4.2.5 Effect of Stirrups at Ends of Specimen on Expansion

Expansion monitoring from the various test specimens identified that the presence of any level of confinement at the specimen ends was an important parameter for expansion behavior. Fabricated specimens for the Shear, Reinforcement Anchorage, and Anchor Test Programs included stirrups (ranging from [redacted] to [redacted] stirrups) on each end of the beam. Development of ASR in the through-thickness direction was comparable for these specimens (up to ~[redacted]% maximum over ~2.5 years; all values obtained away from the stirrup region).

The Instrumentation specimen did not include stirrups on the end of the specimen and the resulting expansion caused a wide crack in the concrete between the reinforcement mats. Measured through-thickness expansion at the ends of the beam exceeded [redacted]% after one year. The wide crack in the instrumentation specimen was an exaggerated version of the mid-plane crack described in Section 4.2.3; however, this crack progressed from the end of the specimen toward the center, where expansion was less than [redacted]% after one year. The ends of concrete members at Seabrook Station have some confinement in the through-thickness direction (e.g., connection with a wall). Accordingly, the expansion behavior of the shear, reinforcement anchorage, and anchor test specimens is more representative of the plant.

4.2.6 Environmental Conditioning Effects

ASR proceeds more rapidly in hot and moist conditions. Test specimens were stored in an Environmental Conditioning Facility (ECF) with alternating wet and dry cycles to promote ASR development. To simulate the potential presence of groundwater on one side of the reinforced concrete at Seabrook Station, FSEL wetted absorbent fabric that was placed on the top side of each specimen. Misters in the ECF maintained a humid environment during wet cycles.

Comparison of expansion data from both sides of the test specimens did not identify a discernible bias in ASR development resulting from the wet fabric. The internal humidity of the concrete and the atmospheric conditions in the ECF were sufficient to drive progression of ASR uniformly throughout the test specimens.

4.2.7 Additional Testing - Confined Cubes

FSEL is currently performing a study to monitor expansion of a set of 19-inch cubes with varying reinforcement configurations and concrete mix designs. A total of 33 cubes are involved in the study. This testing is not part of the MPR/FSEL test programs for NextEra, but does provide valuable insights on expansion behavior.

Preliminary results indicate that the most significant factor for expansion behavior is the presence of reinforcement or lack thereof (Reference 6.1). Specific observations include the following:

- Cubes with one-dimensional reinforcement exhibited significantly less expansion in the reinforced direction than the unreinforced directions. Variation of the reinforcement ratio in the reinforced direction did not affect the relative degree of expansion in any direction. The same relative distribution of expansion was observed for cubes with two-dimensional reinforcement. This expansion behavior is consistent with the results from the MPR/FSEL test programs, where expansion occurred predominantly in the unreinforced direction.

- Cubes with unequal two-dimensional and three-dimensional reinforcement exhibited slightly less expansion in the directions with higher reinforcement ratios. Specifically, a reinforcement ratio difference of 1.1% vs. 0.5% resulted in a maximum expansion differential of about 0.1% between the different directions. These results are consistent with the conclusion from the MPR/FSEL test programs that differences in reinforcement

ratio between the various types of test specimens did not have a noticeable effect on the aging mechanism.

- Cubes with identical reinforcement configurations, but slightly different concrete mix designs (i.e., substitution of coarse aggregate that is not reactive) resulted in comparable expansion behavior in terms of the relative distribution of expansion in the different directions. While the specimens for each MPR/FSEL program used a common concrete mix design, all specimens came from different batches with minor variations. The repeatable results among the MPR/FSEL program test specimens are consistent with the observation from the new FSEL expansion study, that the presence (or lack) of reinforcement is more impactful than minor differences in the concrete mixture (as would be expected with different concrete placements during original construction of Seabrook Station).

4.2.8 Comparison to Literature

The expansion behavior of the test specimens agrees with literature data from many sources, as summarized in References 1.2, 1.3, and 2.2. Of particular interest is Reference 1.11, which reports on ASR expansion of concrete blocks with varying reinforcement. This study concluded that the presence of reinforcement decreased the expansion parallel to the reinforced direction, without reducing (and in some cases increasing) expansion in other directions. Literature sources state that dominant cracks form parallel to the direction of reinforcement, which is consistent with the observation from the MPR/FSEL test programs that the majority of the expansion occurred in the through-thickness (i.e., the unreinforced) direction. Additionally, the literature sources are consistent with the observation of the large crack between the reinforcement mats observed in the test specimens for the MPR/FSEL test programs.

Data collated from multiple studies in Reference 1.2 yielded a conclusion that even a comparatively small amount of reinforcement significantly restrains expansion. This conclusion supports the observation on the effect of stirrups, which significantly reduced expansion in the regions of the beams where they were present.

4.3 MATERIAL PROPERTIES

In addition to expansion monitoring, concrete material properties of the test specimens were used as an independent means for monitoring progression of ASR. To determine the baseline, FSEL tested cylinders that were fabricated at the same time as the test specimens. To determine the ASR-affected material property, FSEL obtained and tested cores from each specimen at the time of testing. For the Instrumentation specimen, FSEL tested cores that were removed as part of instrument installation.

Test Results

For the shear, reinforcement anchorage, and instrumentation test specimens, FSEL performed material property testing for compressive strength and elastic modulus. Results were normalized by calculating the ratio of the material property at the time the core was obtained to the material property result from the corresponding 28-day cylinder. Figures 4-5 and 4-6 present the material properties as a function of through-thickness expansion for the reinforcement anchorage test

specimens (A-Series; blue diamonds), shear test specimens (S-Series, green triangles), and instrumentation specimen (IB-Series; purple circles).

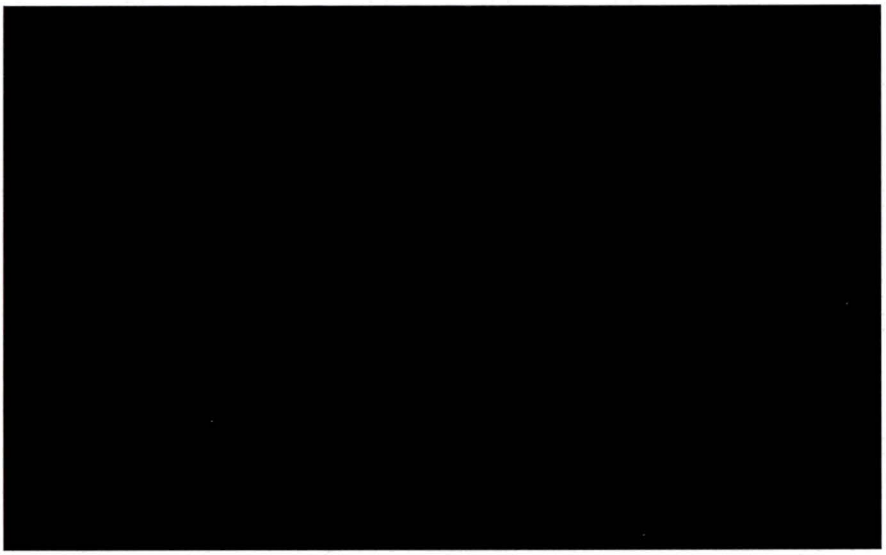

Figure 4-5. Normalized Compressive Strength of Test Specimens

Figure 4-6. Normalized Elastic Modulus of Test Specimens

Figure 4-5 indicates a relatively shallow decrease in compressive strength as a function of ASR development, which is consistent with literature data. As compared to compressive strength, modulus of elasticity (Figure 4-6) exhibited a greater sensitivity to ASR-related degradation and less data scatter. The observation that elastic modulus is a stronger function of expansion is consistent with literature.

Although FSEL performed compressive strength testing on cylinders and cores representing anchor test specimens, these data are not included in Figure 4-5. The methodology for determining through-thickness expansion of the block anchor test specimens was less sophisticated, so direct comparison of the results with those from the shear, reinforcement anchorage, and instrument specimens is somewhat misleading. The material property test data from the anchor test specimens show average normalized compressive strengths of approximately [redacted] and [redacted] at through-thickness expansions of about [redacted]% and [redacted]%, respectively. These data agree with the overall conclusion of a relatively shallow decrease as a function of ASR development. Through-thickness measurements from the girder series anchor tests were not possible, so compressive strength data cannot be directly compared with the other results. Elastic modulus results were not obtained as part of the Anchor Test Program, so anchor test specimen data could not be included in Figure 4-6.

As part of the Shear, Reinforcement Anchorage, and Instrumentation Test Programs, FSEL also performed testing on cylinders and cores for splitting tensile strength, although this practice was instituted late in the MPR/FSEL test programs, so only limited data are available. These data showed a weak sensitivity to ASR development.

Comparison of Material Property Data for Different Test Programs

As identified in published literature (e.g., Reference 1.2), changes in material properties are characteristic of the ASR aging mechanism. The results observed in the MPR/FSEL test programs identify no discernible difference between the test specimens over the course of aging, despite the differences in dimensions, reinforcement ratios, and presence of stirrups between the various specimens. The consistent relationship between aging and expansion for the various beam designs suggests that the aging mechanism is insensitive to the specific boundary conditions of a particular specimen design.

4.4 PETROGRAPHY

4.4.1 Presence of ASR

Cores were obtained from most test specimens for petrographic examinations, which were performed by Wiss, Janney, Elstner Associates (WJE) to assess the general properties of the concrete and to confirm the presence of ASR.

The results of the petrographic investigations confirmed the presence of ASR in the test specimens and determined that results of ASR were observed throughout the entire test specimen, not just at the surface. For cores from the control specimens, petrographic examinations noted the presence of ASR gel in pores and voids, but there were no indications of concrete distress. Therefore, the control specimens provided an appropriate baseline for the test programs.

4.4.2 Investigation of Petrography as a Correlating Parameter

For shear and reinforcement anchorage specimens, WJE also determined the degree of ASR using Damage Rating Index (DRI) and Visual Assessment Rating (VAR). Both methods rely on tabulating visual observations to quantify the extent of ASR distress. The DRI and VAR

methods have been used in evaluation of cores from Seabrook Station. Petrographic studies were included in the test programs to determine if Traditional DRI, Modified DRI (which incorporates symptoms of ASR in fine aggregate), or VAR could be used to estimate expansion to-date at Seabrook Station.

Figures 4-7 and 4-8 compare the petrographic examination results against the corresponding through-thickness expansion for each test specimen.

[redacted]

Figure 4-7. DRI (Traditional and Modified) vs. Through Thickness Expansion

[redacted]

Figure 4-8. VAR vs. Through Thickness Expansion

When compared to measured through-thickness expansion, Traditional DRI, Modified DRI, and VAR all increased as ASR degradation increased. However, the scatter in the data increased at higher levels of ASR-related expansion. In addition, interpretation of petrographic examination results depends on petrographer judgment, which is less repeatable than purely quantitative measurements. Therefore, it may be misleading to apply a correlation of DRI or VAR to through-thickness expansion based on measurements made by another petrographer, such as those of concrete cores from Seabrook Station. Accordingly, MPR does not recommend using DRI or VAR to correlate expansion levels in the test programs with those at Seabrook Station.

4.5 CONCLUSIONS

As part of the large-scale test programs, MPR evaluated test data for ASR development across the various specimen types. Key conclusions from an evaluation of all data include the following:

- Observed expansion in the test specimens was much greater in the through-thickness direction than in the in-plane directions. The test specimen design included two-dimensional reinforcement mats that confined expansion in the in-plane directions, which is representative of Seabrook Station. These observations are consistent with published literature, which indicates that expansion of reinforced concrete will occur predominately in the unreinforced direction(s).

- The rate of expansion was approximately the same in all three directions until expansion reached [redacted]% - [redacted]% (i.e., [redacted] mm/m). In-plane monitoring by crack width summation (i.e., CCI) sufficiently characterizes ASR development until this level, after which through-thickness monitoring is required to track further ASR expansion.

- Total expansion in the through-thickness direction is consistent across the profile of the test specimen. However, the cracking behavior is different. At the test specimen edges, expansion is concentrated in a large crack that runs the length of the surface; whereas away from the edges, expansion is distributed into finer cracks across the test specimen cross-section. The single large crack is an edge effect and is not representative of structures at Seabrook Station.

- CCI values agree closely with the observed in-plane expansion from embedded pins, which is more representative of true strain. Based on this close agreement, CCI data obtained by Seabrook Station is confirmed to be a reasonable approximation for in-plane expansion. Additionally, a study of CCI measurements performed by FSEL personnel and the individual performing CCI for NextEra at Seabrook Station confirmed that repeatability is suitable for monitoring expansion at Seabrook. The procedure used by FSEL is the same as the procedure used at Seabrook.

- The internal humidity of the concrete and the atmospheric conditions in the ECF were sufficient to drive progression of ASR uniformly throughout the test specimens. Wet fabric placed on the top side of the test specimens to simulate groundwater at Seabrook Station did not result in a discernible bias in ASR development.

- Material properties decreased with increasing ASR-related expansion. Elastic modulus was the property that was most sensitive to ASR degradation. The trend between elastic modulus and ASR expansion was also the most repeatable among the material properties investigated. Therefore, elastic modulus is preferred over compressive strength or splitting tensile strength as a parameter for determining ASR development in the absence of monitoring instrumentation.

- The consistent relationship between material properties and expansion for the various beam designs suggests that the specific boundary conditions of a particular specimen design do not affect the ASR aging mechanism.

- Petrographic investigation of cores obtained at the time of testing confirmed the presence of ASR. Cores from control specimens showed ASR gel, but only in voids, and without accompanying concrete distress, which established that the control specimens were free of ASR degradation. Quantitative petrographic results using DRI and VAR trended with observed through-thickness expansion measurements. However, the data scatter increased significantly at higher levels of ASR distress. In addition, the DRI and VAR methodologies rely on subjective petrographer judgment and may not be as repeatable as more purely quantitative methods. Accordingly, neither technique is recommended for correlating expansion levels in the test programs with those at Seabrook Station.

5 Test Results

Testing performed at FSEL included four test programs completed during a period of about four years. The test reports for the test programs provide detailed results (References 4.1, 4.2, & 4.3). This section summarizes the results from each test program.

5.1 Anchor Testing

The purpose of the Anchor Test Program was to quantify the relative impact of ASR on anchor performance by comparing anchor tests at various levels of ASR expansion to tests performed prior to the development of ASR.

5.1.1 Test Description

The approach for anchor testing was consistent with testing performed by the anchor vendor (Hilti) for original construction of Seabrook Station. The vendor testing was used as an input to the plant evaluation demonstrating compliance with NRC IE Bulletin 79-02, which represents the plant design basis for anchor bolts.

FSEL performed testing on two ASR-affected girders, and [redacted] fabricated test specimens that were designed to reflect reinforced concrete at Seabrook Station to the extent practical[7].

Two different types of anchors were used to represent post-installed anchors and cast-in-place embedments at Seabrook Station: the Hilti Kwik Bolt 3 expansion anchor, and the Drillco Maxi-Bolt undercut anchor.

- The Hilti Kwik Bolt 3 is the preferred torque-controlled expansion anchor for Seabrook Station. It is a more modern version of the Hilti Kwik Bolt 1 and Kwik Bolt 2 anchors that were used when Seabrook Station was constructed and installed over time at the beginning of plant life. The Kwik Bolt 3 is representative of its predecessors, as the basic design of the anchor family has not significantly changed.

- The Drillco Maxi-Bolt is an undercut anchor used at Seabrook Station. Undercut anchors are similar to cast-in-place anchors as they both utilize a positive bearing surface to transfer load to the concrete. Thus, undercut anchors are suitable representatives of cast-in-place anchors.

A range of anchor sizes and embedment depths were used for the series of tests. FSEL installed some anchors shortly after fabrication (i.e., prior to ASR development) and some anchors just

[7] FSEL fabricated [redacted] specimens, but one specimen was not tested.

before testing (i.e., after ASR development). Anchors installed shortly after fabrication were set prior to ASR development, so expansion occurred around the anchor shank. Anchors installed just before testing were set after ASR development, so expansion was independent of the presence of an anchor. These conditions simulated the potential bounding conditions at Seabrook (i.e., anchor installed at original construction; anchor installed into ASR-affected concrete as part of a recent modification).

Anchor performance was evaluated using an unconfined tension test. This test method applies a tensile load to the anchor, and uses a reaction frame to distribute the load to a concrete surface a sufficient radius away from the anchor to avoid any confining stress (which could preclude concrete breakout). Load is increased until anchor failure, which occurred by one of the following modes:

- Concrete Breakout - Fracture of the concrete around the anchor in a cone-like shape emanating from the anchor head.
- Anchor Failure - Fracture of the anchor shank.
- Anchor Pull-out/Pull-through - Loss of load resistance due to local concrete failure and/or deformation of the anchor head. (This mode only applies to expansion anchors; i.e., the Hilti Kwik Bolt 3 for this test program.)

The level of ASR degradation was characterized by in-plane expansion, as measured using crack width summation (i.e., Combined Cracking Index). In-plane expansion due to ASR creates microcracks parallel to the axis of an anchor, which are most pronounced in the concrete cover. These microcracks that open perpendicular to the concrete surface have the potential to provide a preferential failure path within a potential breakout cone, leading to degraded anchor performance.

5.1.2 Test Results

Expansion Anchors

Figure 5-1 presents the results of unconfined tension testing of Hilti Kwik Bolt 3 expansion anchors in the girders and the blocks. Test results have been normalized relative to the measured 28-day compressive strength of the specimen, as failures were related to anchor pull-out/pull-through or concrete breakout (not anchor failure). Figure 5-1 includes results from the range of tested anchor sizes and embedment depths. For reference, the dashed lines show the theoretical concrete failure load for each anchor type, normalized by the measured 28-day compressive strength of the control test specimen, which was not affected by ASR.

[redacted]

Figure 5-1. Kwik Bolt 3 Anchor Test Results

The results presented in Figure 5-1 indicate that there is no performance reduction for expansion anchors when in-plane expansion is less than [redacted] mm/m, which is the maximum ASR level exhibited by the test specimens used for expansion anchor testing.

The majority of the test results were for in-plane expansion at [redacted] mm/m or less, because in-plane expansion of the block specimens did not exceed this level. The girder series tests extended the range of expansion covered by the test program. The low level of in-plane expansion in the fabricated specimens is consistent with the test specimens fabricated for the other test programs, which were also designed with two-dimensional reinforcement mats that provide confinement in the in-plane direction and closely represent the reinforced concrete at Seabrook Station.

Undercut Anchors

Figures 5-2 and 5-3 present the results of unconfined testing of Drillco Maxi-Bolt undercut anchors in the girders and the blocks. Results from the range of tested anchor sizes and embedment depths are provided. The dashed lines show the normalized theoretical concrete failure load for each anchor type.

Some of the Drillco Maxi-Bolt tests were installed at a depth less than the manufacturer's recommendation to ensure that tensile performance was limited by concrete failure, and would therefore investigate the effect of ASR in the concrete. Figure 5-2 provides the results of shallow depth testing. Test results in Figure 5-2 were normalized relative to measured 28-day compressive strength of the specimen, because anchor failure was related to concrete breakout. Figure 5-3 provides the results of full depth testing. Test results in Figure 5-3 were not normalized for compressive strength of concrete, because failure of full depth undercut anchors is governed by steel failure of the anchor (i.e., concrete strength is not limiting).

[redacted]

Figure 5-2. Shallow Drillco Maxi-Bolt Anchor Test Results

[redacted]

Figure 5-3. Full-Depth Drillco Maxi-Bolt Anchor Test Results

The results presented in Figures 5-2 and 5-3 indicate that no decrease in anchor performance was observed until in-plane expansion exceeded [redacted] mm/m. The reduction in performance observed in

the test program was only for anchors installed at a significantly reduced embedment depth such that concrete failure limits anchor performance. Anchors with full embedment depth in ASR-affected concrete may perform satisfactorily at an expansion level of [redacted] mm/m or higher.

Anchor Installation Timing

Figures 5-1, 5-2, and 5-3 include results from testing of anchors installed shortly after specimen fabrication (i.e., before development of ASR) and anchors installed just prior to testing (i.e., after development of ASR). Test results indicate that there is no significant difference in anchor performance related to when the anchor was installed.

Through-Thickness Expansion

For the block specimens, through-thickness expansion was estimated at [redacted]% for [redacted] of the test specimens and [redacted]% for [redacted] specimens. The results indicate that anchor performance is not sensitive to through-thickness expansion.

Through-thickness expansion has the potential to create microcracks perpendicular to the axis of an anchor. These potential microcracks that open parallel to the concrete surface do not provide a preferential failure path to result in degraded anchor performance. An anchor loaded in tension would compress the through-thickness expansion and close any potential microcracks within the area of influence of that anchor. Without a "short-circuit" of the breakout cone, through-thickness expansion does not affect anchor performance. This observation with through-thickness expansion is in contrast to in-plane expansion where the potential for a "short-circuited" breakout cone exists.

5.1.3 Additional Testing - Confined Anchor Tests

During the first phase of the girder series in 2012, FSEL performed confined anchor testing that focused on the pullout behavior of expansion anchors in ASR-affected concrete. The testing rig for the confined tests placed the reaction load in the area immediately around the anchor, which prevents the breakout failure mode. The testing demonstrated that there is no significant loss of pullout/pull-through anchor capacity in ASR-affected concrete until higher levels of ASR expansion. Minor losses were observed beginning at an in-plane expansion of [redacted] mm/m.

The confined anchor test data were not included in the test results described in Section 5.1.2, because the stress state in the concrete around the anchor was not consistent with actual conditions for anchors in-service.

5.2 Shear Testing

The purpose of the Shear Test Program was to determine the effect of ASR on out-of-plane shear capacity of reinforced concrete elements without shear reinforcement.

5.2.1 Test Description

The effects of ASR were evaluated using three-point bending tests on large reinforced concrete beams. [redacted] [redacted]-inch wide shear test specimens were fabricated for this test program. [redacted] of these specimens were controls that were tested approximately 30 days following fabrication (i.e., prior to the development of ASR). The other [redacted] test specimens were allowed to develop ASR

and were evaluated relative to the performance of the control tests[8]. Figure 5-4 shows the test setup for the [redacted]-inch shear test specimens.

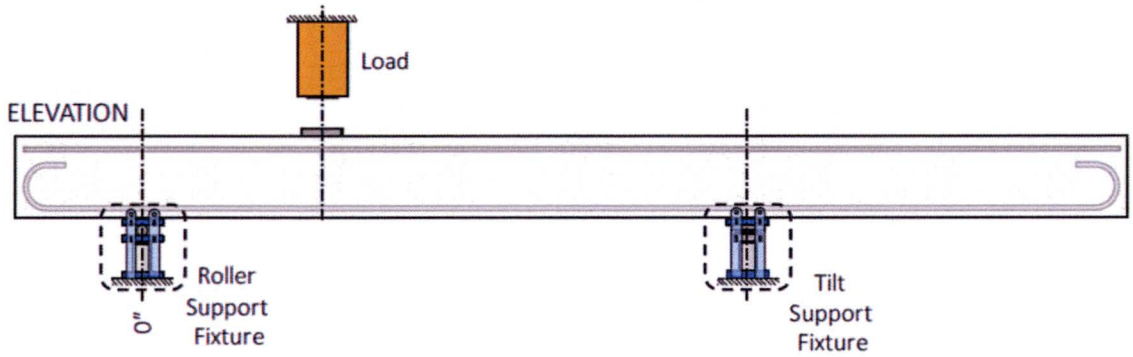

Figure 5-4. Test Setup for [redacted]-inch Shear Test Specimens (Elevation View)

The test span, or test region, is defined as the region between the point where the load is applied and the nearest support point. This loading configuration made it possible to conduct one shear test on each end of the shear test specimens, thereby providing two sets of test results for each specimen.

ACI 318 defines shear capacity based on the onset of diagonal cracking. During the load test, FSEL identified this point visually. In addition, the test equipment monitoring load as a function of deflection would indicate a slight reduction in load followed by a reduction in the slope of the overall response. Load testing continued until failure of the specimen, as identified by a rapid loss in load carrying capacity.

5.2.2 Test Results

Figure 5-5 provides the stress-displacement plots for the [redacted] shear test specimens. For clarity, only one of the two tests from each specimen is presented. The pair of results from each test specimen were nearly identical, so Figure 5-5 is representative of all [redacted] shear test results. The stress was normalized by the measured 28-day compressive strength of concrete for consistency with the approach used in ACI code calculations.

[8] Results from one of these test specimens ([redacted]) is for information only due to a test specimen nonconformance.

Figure 5-5. Normalized Shear Stress-Deflection Plots for [redacted]-inch Shear Test Specimens

The dashed circle indicates the region where diagonal cracking appeared, which is the shear capacity defined by ACI 318. The [redacted] plots in Figure 5-5 (representing twenty shear tests) indicate a clear and repeatable trend of higher levels of ASR expansion correlating with higher shear capacity. All [redacted] of the shear test results exceed the theoretical shear capacity calculated per ACI 318-71, which is a normalized shear capacity of 2.0. The apparent increase in shear capacity resulting from ASR is explained by the prestressing effect discussed in Section 2.2. The large number of tests and the repeatability of the data provide strong confidence in the conclusion that there was no adverse effect on shear capacity at the expansion levels tested.

5.2.3 Comparison to Literature

Published literature on structural testing of ASR-affected reinforced concrete includes a range of results that generally reflects the degree of reinforcement. Literature notes that triaxially reinforced concrete will only be slightly affected even by fairly severe ASR expansions (Reference 1.1). As discussed in Section 2.3.1 of this report, published literature of ASR-affected test specimens without shear reinforcement indicate shear capacity results ranging from a slight increase to a loss of 25%. Based on the results from the Shear Test Program showing no loss in shear capacity, the test specimens actually behaved more like triaxially reinforced concrete. Because the MPR/FSEL test program specimens were much more representative of Seabrook Station than published literature (e.g., [redacted]″ × [redacted]″ specimen cross-section, as compared to 5″ × 3″) and the MPR/FSEL test results were highly repeatable, structural evaluations for Seabrook Station can use the MPR/FSEL conclusion (i.e., no loss of capacity) in lieu of the results from published literature.

5.2.4 Additional Testing - [redacted]-Inch Specimen, Retrofits, and Uniform Loading

[redacted]-Inch Specimen

[redacted]-inch test specimen was tested prior to the development of ASR to evaluate the effect of specimen depth on shear capacity. The specimen was designed and fabricated with reinforcement detailing typical of structures at Seabrook Station and a concrete mix design identical to the other shear test specimens. Although the allowable shear stress in the ACI code is independent of beam depth, there are test data that show the shear stress at initiation of diagonal cracking decreases at greater beam depths (Reference 1.7). The Shear Test Program included evaluation of the effect of specimen depth to ensure that it could be taken into account if tests of ASR-affected specimens had shown a decrease in shear capacity.

Results from this testing indicate that the normalized shear capacity of the [redacted]-inch test specimen was less than that observed in the [redacted]-inch control specimens. The normalized capacity was approximately [redacted]% of the theoretical value specified by the ACI code. This result is consistent with the data available in the ACI database for shear tests of larger width specimens (Reference 1.12). It is important to note that this test was conducted on a non-ASR-affected test specimen and does not impact the conclusions regarding the effect of ASR-related expansion on shear performance.

Retrofit Concept Testing

The original scope of the Shear Test Program included testing of retrofit concepts on specimens exhibiting ASR-induced expansion above which a deleterious effect was observed. A reduction in shear capacity was not observed at the highest expansion levels exhibited by the test specimens, so retrofit testing was not performed as part of the test program.

FSEL performed proof-of-concept testing on retrofit concepts installed in trial specimens (Reference 6.3). Shear performance of specimens with retrofits was compared to shear performance of control specimens. Two retrofit methods were investigated in this testing: (1) undercut anchors installed in the through thickness direction and tensioned on the surface with a nut and plate to provide confinement, and (2) threaded rod grouted into a drilled hole in the concrete and tensioned on the surface with a nut and plate. Four specimens were fabricated for this testing and each specimen was tested on both ends. Table 5-1 summarizes the test specimens used for retrofit testing.

Table 5-1. Proof-of-Concept Testing for Shear Retrofit

Specimen	End	Shear Reinforcement	Retrofit
LD1	North	No	None
LD1	South	No	None
SR1	North	No	Grouted Rods
SR1	South	No	Undercut Anchors
SR2	North	No	Undercut Anchors
SR2	South	No	None

Table 5-1. Proof-of-Concept Testing for Shear Retrofit

Specimen	End	Shear Reinforcement	Retrofit
SR3	North	Yes	None
SR3	South	No	Grouted Rods

Test results indicated that both undercut anchors and grouted rods were effective at shear strengthening. Shear strength and deformation capacity can be increased significantly by adding the retrofit anchors. The anchors behave similar to cast-in-place transverse reinforcement.

Uniform Load Testing

The test setup for the Shear Test Program used asymmetric three-point loading. Use of point loads is convenient and consistent with the test data used to calibrate the ACI code equations for shear. A uniform distribution would be more representative of the loads applied to some structures (e.g., hydrostatic loading on the exterior surface of a below-grade wall). Information in technical literature on the effect of uniform loading is generally based on small-scale test specimens, and indicates a higher capacity with uniform loading. FSEL performed uniform load shear testing on two sets of specimens with designs comparable to the specimens for the Shear Test Program. Force was applied using an air bladder to exert uniform pressure to the underside of each specimen. (References 6.4 & 6.5)

The first set of tests (Reference 6.4) included six beam specimens, three with point loading comparable to the Shear Test Program, and three with uniform loading applied over the middle 2/3 of the test specimen. For these tests, uniformly loaded specimens exhibited a slightly higher shear capacity than specimens subjected to point loads. Additional data on two 24-inch specimens were obtained as part of an investigation of uniform load testing of 48-inch specimens (Reference 6.5). For those tests, the uniformly loaded specimen exhibited lower shear capacity than the specimen subjected to point loads.

In the second set of tests (Reference 6.5), two 48-inch thick specimens and two 24-inch thick specimens were fabricated. The design of these specimens was comparable to the Shear Test Program specimens, although the 48-inch specimens were considerably longer (i.e., 45 feet, 4 inches). One specimen of each thickness was tested with uniform load and one specimen of each thickness was tested with point loads. Load test results indicated that the shear capacity associated with uniform load distribution was slightly less than the shear capacity for point loading of the 48-inch specimen.

The observation from Reference 6.4 and other literature that a uniform load distribution results in higher shear capacity may not apply for larger member depths. Reference 6.5 identified that uniform loading of 24-inch and 48-inch specimens was lower than corresponding tests performed with point loading. Considering these results, MPR concludes that uniform loading cannot be used to recover shear margin for the typical wall thicknesses in structures at Seabrook Station.

5.3 Reinforcement Anchorage Testing

The objectives of the Reinforcement Anchorage Test Program were to determine the effect of ASR on (1) the reinforcement anchorage performance (including lap splice), and (2) the flexural stiffness of reinforced concrete elements.

5.3.1 Test Description

The effects of ASR were evaluated using four-point bending tests to apply flexural load on large reinforced concrete beams that contained reinforcement splices at the longitudinal center of each beam (i.e., the constant moment region). The length of the reinforcement overlap (i.e., the lap splice) is specified by provisions in the ACI code, and was reflected in the test specimen design.

[redacted] test specimens were fabricated for this test program. One of these specimens was a control that was tested approximately 30 days following fabrication (i.e., prior to the development of ASR). The other [redacted] test specimens were allowed to develop ASR and were evaluated relative to the performance of the control test. Figure 5-6 shows the test setup for the reinforcement anchorage test specimens.

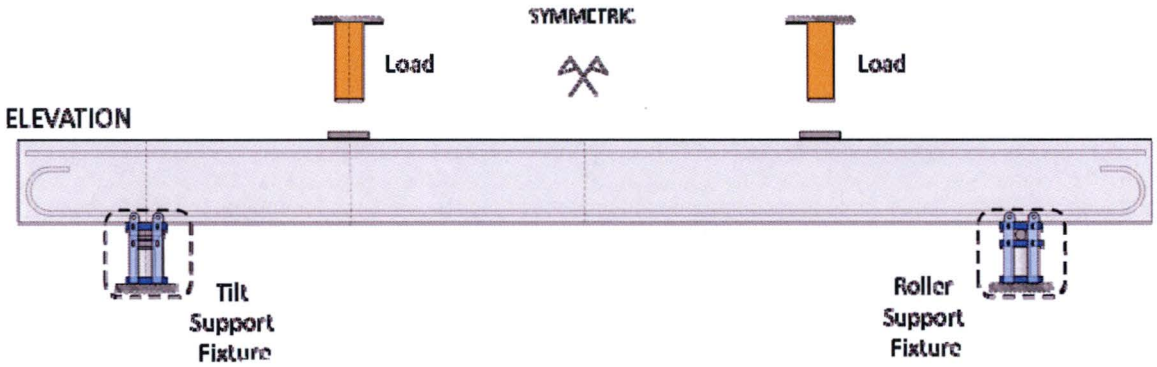

Figure 5-6. Test Setup for Reinforcement Anchorage Test Specimens (Elevation View)

Ideally, a concrete element with spliced reinforcing bars should perform similarly to elements with continuous reinforcement. Performance of the splice in the test specimens was considered satisfactory if the following criteria were met:

- Flexural yielding of the test specimens occurred at (or above) the theoretical "yield moment" (M_y), which is calculated by a moment-curvature analysis. Reinforced concrete members are designed such that the reinforcement will yield prior to failure. If the load applied to the test specimen results in a "yield moment" that is at least M_y, then the reinforcement has been developed up to its yield strength and the splice is performing like a continuous segment of reinforcement bar.

- Failure of the specimen occurs at or above its nominal flexural capacity (M_n), which is calculated using the provisions of ACI 318-71, and represents the maximum capacity of a

flexural element. If the applied load to the test specimen demonstrates a flexural capacity of at least M_n, then the bond between the reinforcement bars and the concrete has not been adversely affected.

In summary, if both criteria are satisfied, then the presence of ASR has not adversely affected reinforcement anchorage or flexural capacity of the test specimen.

5.3.2 Test Results

Figure 5-7 provides load-displacement plots for the control test ([redacted]) and a test specimen that exhibited the highest level of expansion ([redacted]), which is typical of all ASR-affected specimens (total of [redacted] ASR-affected specimens).

[redacted]

Figure 5-7. Load-deflection Plots for Selected Reinforced Anchorage Test Specimens

The test results shown in Figure 5-7 indicate that ASR in the test specimens did not result in any adverse effect on the reinforcement anchorage capacity, although there is a change in the stiffness behavior, as shown by the lower deflection at flexural yielding and the absence of a notable slope change at low loads (~[redacted] kip) when flexural cracking begins.

Detailed evaluation identified that the criteria for satisfactory reinforcement anchorage performance were satisfied for each of the nine reinforcement anchorage tests. Specifically, the applied load resulted in a "yield moment" that exceeded the theoretical value (M_y) by [redacted]%, and the flexural capacity exceeded the nominal flexural capacity (M_n) by [redacted]%. The large

number of tests and the repeatability of the data provide strong confidence in the conclusion that there was no adverse effect on reinforcement anchorage at the expansion levels tested.

5.3.3 Comparison to Literature

The published study discussed in Section 2.3.2 (Reference 1.9) included test results for reinforcement anchorage both with and without transverse reinforcement. Testing on specimens with transverse reinforcement indicated no significant loss of reinforcement anchorage strength, while testing on specimens without transverse reinforcement exhibited 40% decrease. Based on the results from the Reinforcement Anchorage Test Program, the test specimens actually behaved more like concrete with transverse reinforcement. Because the MPR/FSEL test program used a more realistic test method (e.g., flexural test of a large-scale beam containing a rebar splice, as compared to a rebar pullout test of a small specimen), specimens were more representative of structures at Seabrook Station, and the test results were highly repeatable, structural evaluations for Seabrook Station can use the MPR/FSEL conclusion (i.e., no loss of reinforcement anchorage) in lieu of the results from published literature.

5.3.4 Evaluation of Flexural Stiffness

The flexural behavior of a reinforced concrete element is non-linear over the full range of loading for two reasons: (1) changes in the stress-strain relationship of concrete in the tension zone as cracks initiate and grow and, (2) a non-linear (approximately parabolic) stress-strain relationship in the concrete compression zone. This behavior is illustrated in Figure 5-8, which shows a portion of the load-deflection response for the control test specimen.

Figure 5-8. Initial Part of Load Deflection Plot for Reinforcement Anchorage Control Specimen

Evaluation of the effect of ASR on flexural stiffness requires consideration of test specimen stiffness over the entire range of loading. Figure 5-8 identifies the following loads of interest:

- P_{crack} (Point B) is the load at which tensile stresses at the bottom of the test specimen (tension side) reach the tensile strength of concrete, resulting in flexural cracking.
- $P_{service}$ (Point D) is the load on the test specimen at the service-level condition (defined by ACI as 60 percent of the flexural yielding load).
- P_y (Point E) is the load corresponding to the flexural yielding of the test specimen.

The flexural stiffness of each test specimen over various regions can be calculated by finding the slope of the load-deflection plot between two selected points of reference.

Initial Flexural Stiffness

The initial flexural stiffness (prior to the onset of flexural cracking) is the slope from Point A to Point C (from Figure 5-8). This value provides a direct comparison to the calculated flexural stiffness, which is typically used in structural evaluations, and is referred to as the un-cracked concrete stiffness. Figure 5-9 shows the initial flexural stiffness for each test specimen relative to the theoretical value determined from material properties of the 28-day cylinders.

[redacted]

Figure 5-9. Effect of ASR-Related Expansion on Initial Flexural Stiffness

While Figure 5-9 shows a decrease in initial normalized flexural stiffness in the ASR-affected test specimens with respect to the control test specimen, there is no clear trend of changing

stiffness as a function of through-thickness expansion. The decrease in initial stiffness may be due to the presence of small ASR-induced cracks at the onset of testing.

Service Level Flexural Stiffness

The service level flexural stiffness is the slope from Point A to Point D (from Figure 5-8), and represents the stiffness of the test specimen linearized from initial loading to the service level load (defined as 60 percent of the flexural yield load in ACI 318-71). This value is commonly used in reinforced concrete structural evaluations and is referred to as the cracked concrete stiffness. Modern design codes (ACI 318-11) allow the flexural stiffness of cracked beams and walls due to service loads to be taken as 0.35 times the nominal stiffness (EI). Figure 5-10 plots the measured flexural stiffness (normalized to the calculated flexural stiffness) as a function of through-thickness expansion.

[redacted]

Figure 5-10. Effect of ASR-Related Expansion on Service Level Flexural Stiffness

Figure 5-10 shows that the stiffness in ASR-affected test specimens is clearly greater than the control test specimen and that there is an increasing trend with respect to through-thickness expansion.

Summary of Results on Flexural Stiffness

The Reinforcement Anchorage Test Program provided data to assess changes in the flexural stiffness of reinforced concrete caused by development of ASR. Test results indicated that the initial flexural stiffness (i.e., prior to onset of flexural cracking) was generally lower than the theoretical value when ASR was present. However, the service level flexural stiffness, which is commonly used in structural evaluations, is within the limits specified by modern design codes.

5.3.5 Additional Testing - Retrofit for Reinforcement Anchorage

The original scope of the Reinforcement Anchorage Test Program included testing of retrofit concepts on specimens exhibiting ASR-induced expansion above which a deleterious effect was observed. A reduction in reinforcement anchorage was not observed at the expansion levels exhibited by the test specimens, so retrofit testing was not performed as part of the test program.

However, MPR and FSEL performed proof-of-concept testing on trial specimens (Reference 6.2). Specimens were fabricated with inadequate lap splice development length (relative to the ACI 318-71 requirement) to enable testing of a retrofit to augment reinforcement anchorage. The test specimens were comparable to those used in the Reinforcement Anchorage Test Program. The retrofit consisted of post-installed undercut anchors placed in the through-thickness direction that would behave like cast-in-place transverse reinforcement, confining the lap splice region. Retrofits were only installed from one side of the test specimen to simulate an actual structure where only one surface was accessible (e.g., underground structures at Seabrook Station).

Proof-of-concept testing was performed on four test specimens, as summarized in Table 5-2.

Table 5-2. Proof-of-Concept Testing for Reinforcement Anchorage Retrofit

Specimen	Lap Splice Development Length	Retrofit	Moment Capacity Relative to Design
AR0	Meets ACI 318-71 Requirement	No	1.13
AR1	Half of ACI 318-71 Requirement	No	0.83
AR2	Half of ACI 318-71 Requirement	Yes	0.98
AR3	Half of ACI 318-71 Requirement	Yes	1.02

The results indicated that the retrofit concept can increase the strength of a member with a deficient lap splice. However, specimens with the retrofit did not exhibit ductility that was comparable to the control specimen (AR0).

5.4 INSTRUMENTATION TESTING

The purpose of the Instrumentation Test Program was to evaluate the performance of several candidate instruments for measuring through-thickness expansion of reinforced concrete structures that have been affected by ASR.

5.4.1 Test Description

The Instrumentation Test Program evaluated three candidate instruments including one vibrating wire deformation meter (VWDM) and two extensometers. All instruments are installed in the concrete after core drilling to create a core bore.

- The VWDM consists of a vibrating wire strain gauge in series with a spring, which extends the effective range of the strain gauge. Measurements from the VWDM are performed using a battery-powered readout device. The observed expansion is calculated by comparing the readout device output with a baseline value recorded at the time of instrument installation.

- The snap ring borehole extensometer (SRBE) uses a spring-loaded, expanding snap ring to affix two anchors in a bore hole. A gauge rod of known length is connected to the base anchor (i.e., the deep anchor) and extends to the collar anchor (i.e., the shallow anchor). Expansion of the concrete is determined by using a calibrated depth micrometer to measure the distance between the reference surface on the collar anchor and the end of the gauge rod.

- The hydraulic borehole extensometer (HBE) uses a copper bladder, which is expanded with hydraulic fluid that is injected with a hand pump, to affix two anchors in the bore hole. A check valve in the fluid injection line maintains pressure in the bladder. Similar to the SRBE, a gauge rod of known length is connected to the base anchor and extends to the collar anchor. Expansion of concrete is determined by using a calibrated depth micrometer to measure the distance between the reference surface on the collar anchor and the end of the gauge rod.

The two types of extensometers were installed with [redacted] different gauge lengths, resulting in a total of [redacted] different configurations. Reduced length extensometers were investigated because they would not be installed as deep and would therefore reduce the risk of cutting rebar on the exterior reinforcement mat during installation.

To provide a point of reference to compare the expansion measured by each instrument, FSEL drilled companion holes through the entire thickness of the instrumentation specimen, such that each instrument location had companion holes on the left and right. A milled flat plate was placed on the opposite face of the beam to serve as a contact point for measurements with a depth gauge.

FSEL cast the instrumentation test specimen in July 2014 and installed instruments on selected dates from August 2014 through May 2015. The test program concluded in July 2015. Staggering instrument installation investigated the impact of installing instruments after the onset of ASR (as will be the case at Seabrook Station).

5.4.2 Results

Based on the experience during the test program regarding quality of data, ease of installation, and reliability, the SRBE was identified as the best instrument for measuring through-thickness expansion at Seabrook Station.

Data Quality

Measurements obtained from the standard-length SRBE showed the best agreement with the reference measurements from the depth gauge. Instrument data agreed to within about [redacted]% with the reference measurements at expansion values below [redacted]%, which exceeds the range of estimated expansion levels currently observed at Seabrook Station (less than [redacted]%, based on information available at the time this report was published). Figure 5-11 presents the data obtained from the [redacted] standard-length SRBEs installed in the instrumentation specimen. The purple line represents SRBE measurements and the blue lines are the reference measurements (one dashed line for each companion hole; the solid line is the average). Other instruments exhibited irregular data that did not agree as well with the reference measurements (HBE, reduced length SRBE) or failed at higher levels of expansion (VWDM).

[redacted]

Figure 5-11. Comparison of SRBE Instrument Measurements with Depth Gauge Measurements

Figure 5-11 shows a large increase at the end of the test program for two of the four SRBEs. Those instruments were located nearer to the end of the beam where the wide cracking (as discussed in Section 4.2.3 and 4.2.5) occurred due to the lack of stirrups.

Ease of Installation

The SRBE and HBE were much easier to install than the VWDM, which requires refilling the volume around the instrument with grout after installation. Figure 5-12 illustrates the configuration of an installed SRBE.

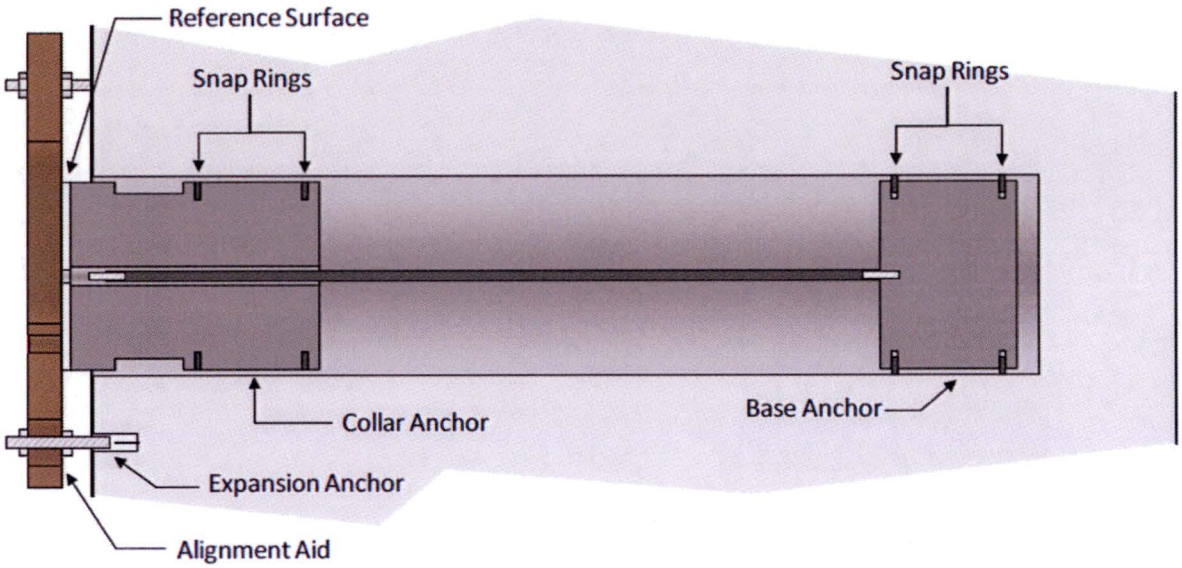

Figure 5-12. Illustration of SRBE during Installation

Long-Term Reliability

None of the SRBEs exhibited reliability problems during the test period. [redacted] of the [redacted] VWDMs stopped functioning after [redacted]. Additionally, the VWDM is calibrated by the vendor but cannot be recalibrated following installation. FSEL observed slippage of the anchors for the HBEs, which resulted in erroneous measurements.

5.4.3 Conclusion

For the reasons listed above, MPR recommended normal-length SRBEs as the instrument for monitoring through-thickness expansion at Seabrook Station.

6 Implications for Seabrook Station

Results from the large-scale test programs will be used to support evaluations of ASR-affected reinforced concrete structures and future monitoring activities. This section summarizes the key implications for Seabrook Station identified as part of the large-scale test programs and related activities.

6.1 Expansion

6.1.1 Expansion Behavior

The reinforcement configuration of the test specimens in the large-scale test program included two-dimensional reinforcement mats in the in-plane directions to match most concrete structures at Seabrook Station. Expansion monitoring during the test programs identified that expansion will initially occur in all directions. However, after expansion in the in-plane directions reached [redacted]% to [redacted]%, the confinement provided by the reinforcement mats caused in-plane expansion to plateau. Subsequent expansion occurred primarily in the unreinforced through-thickness direction.

Technical literature (References 1.2, 1.3, and 1.13) and the large-scale test programs identified that expansion below [redacted]% ([redacted]mm/m) does not result in significant structural consequences. Accordingly, expansion monitoring at Seabrook Station in only the in-plane directions is sufficient until expansion reaches [redacted]%, at which point through-thickness monitoring should begin.

The Structures Monitoring Program for Seabrook Station requires periodic visual inspections of all concrete surfaces. These inspections will identify new locations with ASR symptoms or existing locations with changing ASR symptoms. (Reference 2.5)

6.1.2 In-Plane Expansion Measurements

NextEra has been monitoring expansion of ASR-affected concrete at Seabrook Station using crack width measurement (i.e., combined cracking index (CCI)) since 2011. In the large-scale test programs, in-plane expansion monitoring of specimens included both CCI and measurement of the distance between pins embedded in the specimen during fabrication. The expansion values measured using embedded pins are a better measure of true engineering strain because these measurements reflect both material elongation and crack width. However, the test data showed that CCI and embedded pin measurements were in close agreement both in trend and magnitude, as the crack width measurements rapidly dominate the overall expansion. Therefore, use of CCI at Seabrook Station is a reasonable approximation for in-plane expansion since the beginning of plant life.

CCI is a labor-intensive methodology that may be cumbersome to maintain. As an alternative, NextEra could install embedded pins, which can be measured more rapidly with calipers, but will only provide expansion data from the time the pins are installed by taking the difference between the original distance between the pins and the measured distance. Adding this difference to the CCI measured at the time the pins are installed will provide an approximation for total in-plane expansion since the beginning of plant life.

6.1.3 Through-Thickness Expansion Measurements

The Instrumentation Test Program identified that the snap ring borehole extensometer (SRBE) is a reliable instrument that can provide accurate measurements of through-thickness expansion at Seabrook Station. The SRBE uses spring-loaded, expanding snap rings to affix two anchors in a bore hole. A gauge rod of known length is connected to the base anchor (i.e., the deep anchor) and extends to the collar anchor (i.e., the shallow anchor). Expansion of the concrete is determined by using a depth micrometer to measure the distance between the reference surface on the collar anchor and the end of the gauge rod.

6.1.4 Determining Total Through-Thickness Expansion

Installation of extensometers provides a means for monitoring expansion from the time that the instrument is installed. For structural evaluations at Seabrook Station, NextEra must be able to determine the total expansion from original construction.

In the large-scale test programs, material property testing of cylinders and cores representing the test specimens at various levels of ASR development identified that modulus of elasticity is a sensitive and repeatable indicator of through-thickness expansion. MPR-4153 (Reference 2.6) provides a methodology for using this observation to enable Seabrook Station to determine total through-thickness expansion, as follows:

- Determine the current elastic modulus of the concrete by material property testing of cores removed from the structure at the extensometer location.

- Establish the original elastic modulus by either (1) using the ACI 318-71 correlation to calculate elastic modulus from the 28-day compressive strength records, or (2) obtaining cores from representative ASR-free locations and testing for elastic modulus.

- Calculate the reduction in elastic modulus by taking the ratio of the current elastic modulus of the ASR-affected area to the original elastic modulus.

- Determine through-thickness expansion from original construction to the time the extensometer is installed using an empirical correlation. The correlation relates reduction in elastic modulus with measured expansion from test specimens used during the large-scale ASR structural testing programs. The recommended method in MPR-4153 applies a reduction factor of [redacted] to the elastic modulus ratio, which results in a conservatively high calculation of pre-instrument expansion.

- Calculate total expansion by adding the extensometer measurements to the expansion at the time of instrument installation.

6.1.5 Recommendations for Implementation

Execution of a multi-year large-scale test program to support evaluation of ASR-affected reinforced concrete structures is unique in the nuclear industry in purpose, scale, and methodology. Application of the results of the FSEL test programs requires that the test specimens be representative of reinforced concrete at Seabrook Station, and that expansion behavior of concrete at the plant be similar to that observed in the test specimens. Test specimen design addressed representativeness of the test specimens, and promoted expansion behavior consistent with the plant (e.g., use of two-dimensional reinforcement mats). To confirm that expansion behavior at Seabrook Station is similar to the FSEL test specimens, MPR recommends that NextEra perform checks to ensure that expansion behavior at Seabrook Station is similar to expansion behavior of the FSEL test specimens, as follows:

- Inspect cores obtained for determining through-thickness expansion for mid-plane cracks. As discussed in Section 4.2.3, the test specimens did not exhibit large cracking between the reinforcement mats away from the specimen edges.

- Perform routine inspections of through-thickness and in-plane expansion and compare results to the limits of the test program. Application of the test results beyond the limits of the test program would require further evaluation.

- Periodically compare expansion behavior trends at Seabrook Station with observations to FSEL test specimens. Appendix B of this report provides guidelines for the approach and content of these periodic comparisons. MPR recommends that an initial comparison be performed in the near term after extensometers are installed. MPR recommends follow-up comparisons at least 5 years prior to the Period of Extended Operations (PEO) and every 10 years thereafter[9].

- Two years prior to PEO, remove cores from three locations near extensometers and perform modulus testing to determine expansion using the methodology from MPR-4153. Compare the results with the change in through-thickness expansion observed with the extensometers to provide data corroborating applicability of the MPR-4153 correlation at Seabrook Station. This investigation should select locations with pre-instrument expansion in the range of [redacted]% to [redacted]% (e.g., [redacted]%, [redacted]%, and [redacted]%).

6.2 STRUCTURAL PERFORMANCE

This section summarizes the conclusions of the test programs that can be used for structural evaluations. A companion report (MPR-4288, "Seabrook Station: Impact of Alkali-Silica Reaction on the Structural Design Basis") describes the effect of ASR on the structural design

[9] As an example, the PEO will begin in 2030. If the next assessment is performed 5 years prior to PEO in 2025. subsequent assessments would be performed in 2035 and 2045.

basis of affected structures at Seabrook Station and provides guidance for evaluations of those structures.

6.2.1 Anchors and Embedments

Results from the Anchor Test Program indicate that there is no reduction of anchor capacity in ASR-affected concrete with in-plane expansion levels of less than [redacted] mm/m. The current maximum in-plane expansion observed at Seabrook Station is considerably less than this expansion level. Because the two-dimensional reinforcement mats at Seabrook Station should cause in-plane expansion to plateau at relatively low levels, it is unlikely that ASR will cause expansion of [redacted] mm/m.

In-plane expansion due to ASR creates microcracks parallel to the axis of an anchor, which are most pronounced in the concrete cover. These microcracks that open perpendicular to the concrete surface have the potential to provide a preferential failure path within a potential breakout cone, leading to degraded anchor performance. Conversely, through-thickness expansion has the potential to create microcracks perpendicular to the axis of an anchor. These potential microcracks that open parallel to the concrete surface do not provide a preferential failure path to result in degraded anchor performance. Test results confirmed that anchor performance was insensitive to through-thickness expansion of up to about [redacted]%. Accordingly, MPR recommends in-plane expansion (e.g., via CCI) as the monitored parameter for assessing anchor performance.

6.2.2 Shear Performance

Results from the Shear Test Program indicate that there is no reduction of shear capacity in ASR-affected concrete with through-thickness expansion levels up to [redacted]%, which is the maximum expansion level exhibited by the test specimens. The [redacted] ASR-affected test specimens (total of [redacted] tests) were all capable of reaching their calculated shear strength per ACI 318-71. The test results indicated a repeatable trend that higher levels of ASR resulted in higher shear capacity due to ASR-induced prestress. For conservatism, MPR does not recommend taking credit for this prestressing as part of structural evaluations.

While ASR-related expansion is a volumetric effect, the Shear Test Program used through-thickness expansion as the monitored parameter representing ASR degradation because in-plane expansion plateaued at relatively low levels (approximately [redacted]%).

6.2.3 Reinforcement Anchorage

Results from the Reinforcement Anchorage Test Program indicate that there is no reduction in the performance of reinforcement lap splices in ASR-affected concrete with through-thickness expansion levels up to [redacted]%, which is the maximum expansion level exhibited by the test specimens. The eight ASR-affected test specimens were all capable of reaching their calculated flexural strength per ACI 318-71, and the yield and bending moments were relatively insensitive to the level of ASR-induced expansion.

Consistent with the Shear Test Program, through-thickness expansion was used to monitor ASR degradation in the reinforcement anchorage test specimens because in-plane expansion plateaued at relatively low levels.

6.2.4 Flexural Stiffness

While progression of ASR in the reinforcement anchorage test specimens did not impact the yield or ultimate flexural capacity of the test specimens, there was a notable change in the stiffness, characterized by a decrease in deflection at yield. Key observations on the changes in flexural stiffness included the following:

- The service level flexural stiffness is the value commonly used in reinforced concrete structural evaluations and is referred to as the cracked concrete stiffness. Modern design codes (ACI 318-11) allow the flexural stiffness of cracked beams and walls due to service loads to be taken as 0.35 times the nominal stiffness (EI). The test program results indicated that all ASR-affected test specimens exceeded this stiffness value.

- The flexural stiffness of the ASR-affected specimens was less than that of the control test specimen at loads less than [redacted]% of the load at which the test specimen yielded. The reduction is attributed to the presence of numerous ASR-induced cracks in the test specimen prior to the application of the load during the structural tests.

- The flexural stiffness between the onset of flexural cracking and flexural yielding was observed to be greater in the ASR-affected test specimens compared with the control test specimen and showed a generally increasing trend with the increase in ASR-related expansion at the time of structural test. The increased stiffness with the progression of ASR is attributable to the ASR-induced prestressing in the test specimens.

The impact on seismic performance resulting from these differences in flexural stiffness will be evaluated as part of the companion report (MPR-4288).

6.2.5 Use of Structural Test Program Results

Applicability to Site Structures

Results of the MPR/FSEL test program are generally applicable to all reinforced concrete structures at Seabrook Station, which have similar reinforcement configurations and concrete mixture designs. This approach was corroborated by material property testing of the various test specimens for the MPR/FSEL test programs, which had minor differences in reinforcement ratio and number of stirrups on specimen ends, and were fabricated from different concrete batches (although the mix designs were comparable). Observed material properties exhibited a consistent relationship between aging and expansion across the various beam designs, which suggests that the aging mechanism is insensitive to the specific boundary conditions of a particular specimen design. This conclusion supports application of structural performance results from the large-scale test programs to the range of structures at Seabrook Station.

Interpretation of Threshold Values

The large-scale test program results provide threshold values for which ASR has no effect on the respective limit state. These values reflect the extent of ASR development that was achieved as

part of the test programs; they do not represent limits above which ASR has a deleterious effect. Expansion at Seabrook Station is currently well below these threshold values. If expansion approaches the threshold values, NextEra may perform additional research to justify structural adequacy beyond the ASR development levels evaluated in the MPR/FSEL large-scale test programs.

6.2.6 Retrofit Testing

Proof-of-concept testing for potential retrofits provided insights that would have supported subsequent qualification testing of retrofits on ASR-affected test specimens for shear and reinforcement anchorage. However, because the test specimens did not exhibit any degradation in structural performance, the retrofits were not tested on ASR-affected specimens.

If ASR-related expansion at Seabrook Station approaches the maximum expansion identified in the test programs and additional actions are necessary to justify structural adequacy, NextEra may pursue follow-up testing of the retrofits to demonstrate their efficacy in ASR-affected concrete.

7 References

1. Publicly Available Literature

   1.1. United States Nuclear Regulatory Commission, NRC Information Notice 2011-20, "Concrete Degradation by Alkali-Silica Reaction," November 18, 2011. (ADAMS Accession No. ML112241029)

   1.2. Institution of Structural Engineers, "Structural Effects of Alkali-Silica Reaction: Technical Guidance on the Appraisal of Existing Structures," London, UK, 1992.

   1.3. Fournier, B. et al, FHWA-HIF-09-004. "Report on the Diagnosis, Prognosis, and Mitigation of Alkali-Silica Reaction in Transportation Structures," January 2010.

   1.4. Ahmed, T., Burley, E., and Ridgen, S., "The Static and Fatigue Strength of Reinforced Concrete Beams Affected by Alkali-Silica Reaction," ACI Materials Journal Vol. 95 No. 4 (1998): 356-368.

   1.5. Deschenes, D., Bayrak, O., and Folliard, K., "ASR/DEF-Damaged Bent Caps: Shear Tests and Field Implications," Technical Report No. 12-8XXIA006, Center for Transportation Research, University of Texas at Austin, August 2009.

   1.6. Chana, P., and Korobokis, G., "Structural Performance of Reinforced Concrete Affected by Alkali Silica Reaction: Phase 1," Transport and Road Research Laboratory, Contractor Report 267, October 1990.

   1.7. Collins, M. and Kuchma, D., "How Safe Are Our Large, Lightly Reinforced Concrete Beams, Slabs, and Footings?", ACI Structural Journal, July-August 1999, pp. 482-491.

   1.8. den Uijl, J., and Kaptijn, N., "Structural Consequences of ASR: An Example of Shear Capacity," Heron Vol. 47 No. 2 (2002): 125-139.

   1.9. Chana, P., "Bond Strength of Reinforcement in Concrete Affected by Alkali-Silica Reaction," Crowthorne: Transport and Road Research Laboratory, Department of Transport, 1989, Contractor Report 141.

   1.10. ACI Committee 408, "Bond and Development of Straight Reinforcing Bars in Tension," (ACI 408R-03), Farmington Hills: American Concrete Institute, 2003.

   1.11. Smaoui, N., Bissonnette, B., Berube, M., and Fournier, B., "Stresses Induced by Alkali-Silica Reactivity in Prototypes of Reinforced Concrete Columns Incorporating Various Types of Reactive Aggregates," Canadian Journal of Civil Engineering, Volume 34, 2007.

1.12. Reineck, K., Bentz, E., Fitik, B., Kuchma, D., and Bayrak O., "The ACI-DAfstb Database of Shear Tests on Slender Reinforced Concrete Beams without Stirrups," ACI Structural Journal, Vol. 110, No. 5 September - October 2013, pp. 867-875.

1.13. ORNL/NRC/LTR-95/14, "In-Service Inspection Guidelines for Concrete Structures in Nuclear Power Plants," December 1995.

1.14. Chen, W., "Plasticity in Reinforced Concrete," J. Ross Publishing, Fort Lauderdale, 2007.

2. Seabrook Station Documentation

2.1. MPR-3727, "Seabrook Station: Impact of Alkali-Silica Reaction on Concrete Structures and Attachments," Revision 1. (Seabrook FP# 100716)

2.2. Bayrak, O., "Structural Implications of ASR: State of the Art," July 2014 (Seabrook FP# 100697).

2.3. Public Service Company of New Hampshire letter, dated Jan. 3, 1980, to NRC Region I, Office of Inspection and Enforcement (response to NRC IE Bulletin 79-02, "Pipe Support Base Plate Designs Using Concrete Expansion Anchor Bolts," Revision 2, November 8, 1979).

2.4. MPR Document 0326-0058-165, "Approach to Measuring Cracks due to Alkali-Silica Reaction in Concrete Test Specimens," Revision 0.

2.5. NextEra Energy letter SBK-L-15202, dated December 3, 2015, "Response to Requests for Additional Information for the Review of the Seabrook Station, License Renewal Application - SET 25 (TAC NO. ME4028) Relating to the Alkali-Silica Reaction (ASR) Monitoring Program." (ML15343A470 in NRC ADAMS Database.)

2.6. MPR-4153, "Seabrook Station - Approach for Determining Through-Thickness Expansion from Alkali-Silica Reaction," Revision 2. (Seabrook FP# 100918)

3. Planning Documents for MPR/FSEL Test Programs

3.1. MPR Document 0326-0058-26, "Specification for Strength Testing of Attachments in ASR-Affected Concrete," Revision 7.

3.2. MPR Document 0326-0062-05, "Specification for Shear and Reinforcement Anchorage Testing of ASR-Affected Reinforced Concrete," Revision 10.

3.3. MPR-3757, "Shear and Reinforcement Anchorage Test Specimen Technical Evaluation," Revision 4. (Seabrook FP# 100760)

4. Test Reports for MPR/FSEL Test Programs

   4.1. MPR-3722, "Strength Testing of Anchors in Concrete Affected by Alkali-Silica Reaction," Revision 2. (Seabrook FP# 100718)

   4.2. MPR-4262, "Shear and Reinforcement Anchorage Testing of Concrete Affected by Alkali-Silica Reaction," Volume I, Revision 1 & Volume II, Revision 0. (Seabrook FP# 100994)

   4.3. MPR-4231, "Instrumentation for Measuring Expansion in Concrete Affected by Alkali-Silica Reaction," Revision 0. (Seabrook FP# 100972)

5. Commercial Grade Dedication Report for MPR/FSEL Test Programs

   5.1. MPR-3726, "Commercial Grade Dedication Report for Seabrook ASR Anchor Testing," Revision 0. (Seabrook FP# 100719)

   5.2. MPR-4247, "Commercial Grade Dedication Report for Seabrook ASR Anchor Testing (Block Series and Girder Series Phase 2)," Revision 0. (Seabrook FP# 100986)

   5.3. MPR-4259, "Commercial Grade Dedication Report for Seabrook ASR Shear, Reinforcement Anchorage, and Instrumentation Testing," Revision 0. (Seabrook FP# 100995)

   5.4. MPR-4286, "Supplemental Commercial Grade Dedication Report for Seabrook ASR Test Programs," Revision 0. (Seabrook FP# 101003)

6. Documentation for Information Only Testing at FSEL

   6.1. Letter from FSEL (Bayrak) to MPR (Simons), "Morgan Therese Allford's Research," dated April 21, 2016.

   6.2. Beiter, K., "Retrofit of Deficient Lap Splice with Post-Installed Anchors," University of Texas at Austin, December 2015.

   6.3. Dondrea, A., "Undercut and Grouted Anchors as Post-Installed Shear Reinforcement," University of Texas at Austin, August 2014.

   6.4. Dassow, N., "Effect of Uniform Load on the Shear Strength of Slender Beams without Shear Reinforcement," University of Texas at Austin, August 2014.

   6.5. Klein, J., "Behavior of Slender Beams without Stirrups: Effects of Load Distribution and Member Depth," University of Texas at Austin, December 2015.

A
Test Specimens

This appendix provides photographs, diagrams, and drawings for the test specimens used in the Anchor, Shear, Reinforcement Anchorage, and Instrumentation Test Programs. (References 4.1, 4.2, & 4.3)

Figure A-1. Photo of Girder Series Anchor Test Specimen

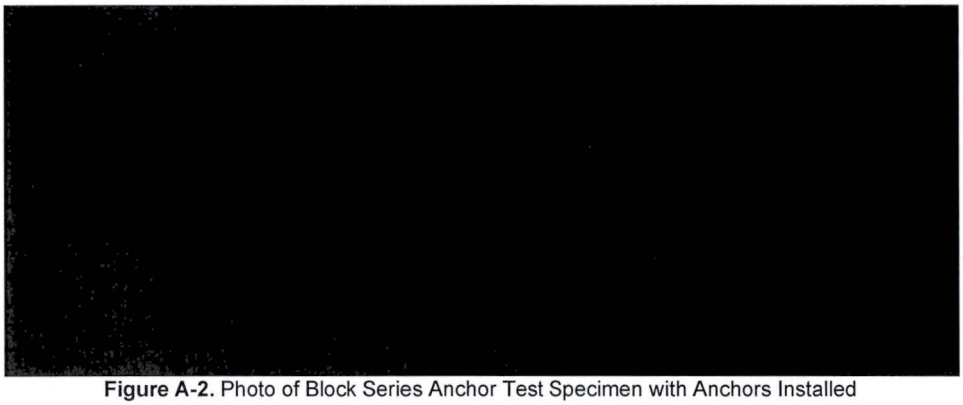

Figure A-2. Photo of Block Series Anchor Test Specimen with Anchors Installed

Figure A-3. Diagram of Block Series Anchor Test Specimen Showing Reinforcement

Figure A-4. Diagram of 24-Inch Shear Test Specimen Showing Reinforcement

[redacted]

Figure A-5. Diagram of Reinforcement Anchorage Test Specimen Showing Reinforcement

[redacted]

Figure A-6. Diagram of Instrumentation Test Specimen Showing Reinforcement (Elevation View)

[redacted]

Figure A-7. Diagram of Instrumentation Test Specimen Showing Reinforcement (Plan View)

B

Guidelines for Periodic Expansion Behavior Check

1. Purpose

This appendix provides guidelines for performing periodic checks of observed expansion behavior at Seabrook Station to confirm that expansion behavior is consistent with FSEL test specimens.

2. Background

Application of the results of the FSEL test programs requires that the test specimens be representative of reinforced concrete at Seabrook Station, and that expansion behavior of concrete at the plant be similar to that observed in the test specimens. Test specimen design addressed representativeness of the test specimens, and promoted expansion behavior consistent with the plant (e.g., use of two-dimensional reinforcement mats).

To confirm that expansion behavior at Seabrook Station is similar to the FSEL test specimens, MPR recommends (in Section 6.1.5) that NextEra perform periodic checks of expansion behavior at Seabrook Station and compare observations from the MPR/FSEL test programs.

MPR recommends that an initial check be performed in the near term after extensometers are installed, and follow-up checks were recommended at least 5 years prior to the Period of Extended Operations (PEO) and every 10 years thereafter

3. Check 1 - Review of Cores for Mid-Plane Cracking

As recommended in Section 6.1.5, NextEra should inspect cores for mid-plane cracks upon removal of the core. As part of the periodic check of expansion behavior, NextEra should review documentation of all cores obtained more recent than the last periodic check for any trends in observation of mid-plane cracks. Such a trend would be unexpected and would prompt an evaluation to determine appropriate follow-up actions.

4. Check 2 - Expansion Relative to Test Program Limits

The FSEL test programs included structural testing of reinforced concrete specimens with a range of ASR development. The conclusions of the test program are applicable to reinforced concrete at Seabrook Station that is within the range of ASR development tested at FSEL. Specifically, the limits of ASR development evaluated by FSEL testing include the following:

- Shear [redacted]% through-thickness expansion

- Reinforcement Anchorage - [redacted]% through-thickness expansion
- Anchor Capacity - [redacted]mm/m ([redacted]%) in-plane expansion

Routine monitoring of ASR-affected locations will identify if the observed expansion at Seabrook Station exceeds these limits, and would necessitate a location-specific structural evaluation. As part of the periodic check, MPR recommends that NextEra determine the potential for future expansion to exceed the test program limits. This review of margin to the test program limits may be performed by considering the "expansion rate" observed over a series of measurements and the projected time to reach the test program limits. If such projections indicate that the limits may be exceeded prior to the next periodic check, NextEra should further investigate the location(s) in question or develop contingency plans for extending the expansion limit (e.g., supplemental testing).

5. CHECK 3 - VOLUMETRIC EXPANSION

The limits provided in Check 2 focus on expansion in the direction of interest for each limit state (i.e., through-thickness for shear and reinforcement anchorage; in-plane for anchor capacity). This approach is simple and easy to implement. While test data show that restraint of ASR expansion in one direction does not significantly increase expansion in unrestrained directions (Reference 6.1), potential volumetric effects should be addressed conservatively. As part of the periodic assessment of expansion behavior, MPR recommends that NextEra determine the volumetric expansion of the monitored locations at Seabrook Station and compare the results to the FSEL test specimens.

Volumetric strain is determined by adding the observed strain in each of the three directions (Reference 1.14), as follows:

$$\varepsilon_v = \varepsilon_1 + \varepsilon_2 + \varepsilon_3$$

Where:

ε_v = volumetric strain
ε_1 = principal strain (e.g., in the length direction)
ε_2 = principal strain (e.g., in the height direction)
ε_3 = principal strain (e.g., in the depth direction)

For the parameters monitored at Seabrook Station, this equation can be re-written, as follows:

$$\varepsilon_v = 2 \times (0.1 \times CCI) + \varepsilon_{TT}$$

Where:

ε_v = volumetric strain, %
CCI = combined cracking index, mm/m
ε_{TT} = through-thickness expansion, %

Using this expression for the FSEL test specimens, the maximum volumetric expansion of a shear test specimen was [redacted]% and the maximum volumetric expansion of a reinforcement anchorage test specimen was [redacted]%. MPR recommends a check criterion of [redacted]% for volumetric expansion to confirm that the FSEL test data bounds the observed expansion at Seabrook Station in terms of volumetric expansion. Figure B-1 is a chart illustrating this check criterion.

[redacted]

Figure B-1. Volumetric Expansion Check Criterion

Note that the anchor capacity criterion of [redacted] mm/m is bounded by the check criterion in Figure B-1. If all of the [redacted]% volumetric expansion were in the in-plane direction, the CCI would only be [redacted] mm/m.

MPR recommends that NextEra evaluate any locations exhibiting expansion that exceeds the [redacted]% volumetric expansion check criterion.

NextEra should also consider the potential for future volumetric expansion to exceed the check criterion illustrated in Figure B-1. Similar to the approach for Check 2, this review of margin to the criterion may be performed by considering the "expansion rate" determined over a series of measurements and the projected time to reach the volumetric expansion criterion. If such projections indicate that the criterion may be exceeded prior to the next periodic check, NextEra should perform an engineering evaluation to determine appropriate follow-up action.

6. CHECK 4 - EXPANSION DIRECTION

For the FSEL test specimens, the rate of expansion was approximately the same in all three directions until expansion reached [redacted]% to [redacted]% (i.e., [redacted] to [redacted] mm/m). Thereafter, the FSEL test specimens exhibited much greater expansion in the through-thickness direction than the in-plane directions. These observations led to a conclusion that in-plane monitoring by crack width summation (i.e., CCI) sufficiently characterizes ASR development until at least [redacted]% expansion (i.e., [redacted] mm/m), after which through-thickness monitoring is required to track further ASR expansion. NextEra has installed extensometers in selected locations where in-plane expansion is less than 1 mm/m.

For locations where NextEra has installed an extensometer, MPR recommends that NextEra check the trend for expansion direction as a confirmation of consistency with the expansion behavior observed in the FSEL test program.

NextEra has installed several extensometers in locations where in-plane expansion is less than 1 mm/m. This provides the opportunity to check consistency of expansion behavior over the entire range exhibited at Seabrook Station.

Figure B-2 is a chart that may be used for analyzing the trend for observed expansion direction at Seabrook Station.

[redacted]

Figure B-2. Expansion Direction Trend Chart

MPR recommends that NextEra perform an engineering evaluation if the periodic expansion check identifies either of the following circumstances:

- Any location with CCI less than [redacted] mm/m exhibits through-thickness expansion approaching the test program limit (i.e., greater than [redacted] %). Such an observation would challenge the premise that an extensometer is not needed for locations with a CCI of less than [redacted] mm/m. The engineering evaluation would focus on the suitability of this criterion.

- The general trend of expansion behavior at Seabrook Station significantly departs from the expansion behavior of the FSEL test specimens. The expected trend at Seabrook Station is that in-plane and through-thickness expansion values will be comparable at lower expansion levels and eventually transition to predominately through-thickness expansion.

  Plotting of expansion data at Seabrook Station onto a chart like Figure B-2 is expected to result in a "cloud" of data that exhibits considerable variability. For the FSEL test specimens, the point at which expansion reoriented primarily in the through-thickness direction varied between specimens, which were designed to be essentially identical. Data from Seabrook Station may exhibit further variability from configuration (e.g., wall thickness) and the confinement associated with deadweight and configuration.