M. Short, Consultant
Bruce ?, Areva, TITLE NEEDED
??, ATHOS Engineer, NAME AND TITLE NEEDED

NRC Personnel
T. Blount, Deputy Division Director, Division of Reactor Safety
R. Lantz, Branch Chief, Projects Branch D

## LIST OF ITEMS OPENED, CLOSED AND DISCUSSED

Opened

| | | |
|---|---|---|
| 05000362/2012007-01 | URI | Adequacy of the Trip/Transient and Event Review Procedure (Section 1) |
| 05000362/2012007-02 | URI | Evaluation of Unit 3 Vibration and Loose Parts Monitoring System Alarms (Section 3) |
| 05000362/2012007-03 | URI | Evaluation of Retainer Bars Vibration during the Original Design of the Replacement Steam Generators (Section 4 |
| 05000362/2012007-04 | URI | Evaluation of Changes in Dimensional Controls during the Fabrication of Unit 2 and Unit 3 Replacement Steam Generators (Section 4) |
| 05000362/2012007-05 | URI | Shipping Requirements not in Accordance with Industry Standards (Section 7) |
| 05000362/2012007-06 | URI | Shipping Requirements not in Accordance with Design and Fabrication Specifications (Section 7) |
| 05000362/2012007-07 | URI | Unit 3 Steam Generator E088 Stresses Related to Handling (Section 7) |
| 05000362/2012007-08 | URI | Non-Conservative Thermal-Hydraulic Model Results (Section 8) |
| 05000362/2012007-09 | URI | Evaluation of the Effects of Divider Plate Weld Repairs in Unit 3 Replacement Steam Generators (Section 12) |
| 05000362/2012007-10 | URI | Evaluation of Departure of Method of Evaluation for 10 CFR 50.59 Processes (Section 13) |

Closed

None

Discussed

None

## LIST OF DOCUMENTS REVIEWED

AUDITS/SELF-ASSESSMENTS/QUALITY CONTROL DRAWINGS

SONGS DOCUMENTS

| Number | Title | Revision/Date |
|---|---|---|
| MHI-1-06 | Southern California Audit of Mitsubishi Heavy Industries | June 16, 2006 |
| MHI-1-09 | Southern California Audit of Mitsubishi Heavy Industries | April 27, 2009 |
| MHI-2-04 | Southern California Audit of Mitsubishi Heavy Industries | December 14, 2004 |
| SCES-007-10 | Procurement and Material Control Program Audit | September 14, 2010 |
| MHI-01-04 | Evaluation and Review of Contractor, Consultant, Utility or Licensee Audit Report | September 24, 2004 |
| | Status of Southern California Edison (SCE) Corrective Action Request (CAR) Nos. S-1918 and S-1932 Closure | March 23, 2007 |
| | Southern California Edison (SCE) Corrective Action Request (CAR) No. S-1991, Supplier Stop Work Order (SSWO) No. SSWO-001-08 | 1 |
| SO123-XV-50 | Corrective Action Program | 25 |
| | RSG-SCE/MHI-06-2233 – Southern California Edison (SCE) Corrective Action Request (CAR) No. S-1882 Closure | May 3, 2006 |

| Number | Title | Revision/Date |
|---|---|---|
| | RSG-SCE/MHI-06-1916 - Southern California Edison (SCE) Corrective Action Request, (CAR) No. S-1906 Closure | February 22, 2006 |
| | Southern California Edison (SCE) Audit No. MHI-1-06 and Corrective Action Request (CAR) Nos. S-1915, S-1916, S-1917, and S-1918 | January 31, 2008 |
| AR# 040901345 | Qualification Letter | September 24, 2004 |
| AR#050301458 | Qualification Letter | March 23, 2005 |
| AR#060500134 | Qualification Letter | May 10, 2006 |
| 6C294014 | Edison Material Supply Procurement Order for Mitsubishi Heavy Industries | September 28, 2004 |
| SO23-617-01 | Specifications for design and fabrication of RSG for Unit 2 and Unit 3 | 4 |
| SO23-617-02 | Specifications for Baseline Pre-Service Examination on Tubing for RSG | 1 |
| SO23-617-03 | Replacement Steam Generator Installation Unit 2 and 3 | 4 |
| SO23-617-04 | Specifications for the Transportation of Replacement Steam Generators | 1 |
| TL C001783 | San Onofre Topical Report Quality Assurance Manual | 64 |
| TL C001782 | San Onofre 2&3 FSAR Updated Quality Assurance Program Topical Report SCE-1 | 15 |

| Number | Title | Revision/Date |
|---|---|---|
| | SONGS Unit 2 & 3 Replacement Steam Generator QA/QC Manufacturing Oversight Plan Japan Steel Works | 0 |
| | SONGS Unit 2 & 3 Replacement Steam Generator QA/QC Oversight Plan | 1 |
| | SONGS Unit 2 & 3 Replacement Steam Generator Receipt Inspection Plan | 0 |
| SGR-A10183 | Replacement Steam Generator Resident Oversight Plan | 1 |
| SGR-A10159 | San Onofre Nuclear Generating Station Unit 2 & 3 Steam Generator Replacement Project Plan | 1 |
| MHI-1SV-05 | Source Verification Report of MHI/Japan Steel Work | March 15, 2005 |
| MHI-1SV-06 | Source Verification Report of MHI/Japan Steel Work | February 7, 2006 |
| MHI-1SV-07 | Source Verification Report of MHI | March 20, 2007 |
| MHI-1SV-08 | Source Verification Report of MHI/Japan Steel Work | August 29, 2008 |
| MHI-2SV-05 | Source Verification Report of MHI | April 1, 2005 |
| MHI-2SV-06 | Source Verification Report of MHI/Japan Steel Work | March 24, 2006 |
| MHI-2SV-07 | Source Verification Report of MHI | November 2, 2007 |
| MHI-3SV-05 | Source Verification Report of MHI/Japan Steel Work | May 3, 2005 |
| MHI-3SV-06 | Source Verification Report of MHI | May 3, 2006 |
| MHI-4SV-05 | Source Verification Report of MHI/Japan Steel Work | May 4, 2005 |

| Number | Title | Revision/Date |
|---|---|---|
| MHI-4SV-06 | Source Verification Report of MHI/Japan Steel Work | May 23, 2006 |
| MHI-5SV-05 | Source Verification Report of MHI/Japan Steel Work | June 10, 2005 |
| MHI-5SV-06 | Source Verification Report of MHI | September 26, 2006 |
| MHI-6SV-05 | Source Verification Report of MHI | July 1, 2005 |
| MHI-6SV-06 | Source Verification Report of MHI | January 24, 2007 |
| MHI-7SV-05 | Source Verification Report of MHI/Japan Steel Work | August 12, 2005 |
| MHI-7SV-06 | Source Verification Report of MHI | January 16, 2007 |
| MHI-8SV-05 | Source Verification Report of MHI | March 26, 2007 |
| MHI-8SV-06 | Source Verification Report of MHI | Date? |
| MHI-9SV-05 | Source Verification Report of MHI/Japan Steel Work | October 13, 2005 |
| MHI-10SV-05 | Source Evaluation Report of MHI | February 8, 2006 |
| MHI-11SV-05 | Source Verification Report of MHI/Japan Steel Work | December 21, 2005 |
| SO123-XII-18.19 | Nuclear Oversight Procedure Supplier Audits | 10 |
| SO123-XII-7.12 | Nuclear Oversight Procedure Source Verification | 5 |

CALCULATIONS

| Number | Title | Revision |
|---|---|---|
| SO23-617-1-C275 | Design Report of the Channel Head Region | 6 |
| SO23-617-1-C514 | Design for RCS Flow Rate | 1 |
| SO23-617-1-M1562 | Retainer Bar Tube Wear Report | 0 |
| | | |

CORRECTIVE ACTION REPORTS

| | | | | |
|---|---|---|---|---|
| | | | | |
| | | | | |
| | | | | |

DESIGN BASIS DOCUMENTS

| Number | Title | Revision |
|---|---|---|
| SO23-617-01 | Specification for Design and Fabrication of RSGs for Unit 2 and Unit 3 | 4 |
| SO23-617-1-M1492 | As-Built Reconciliation Report for Unit 3 | 2 |
| L5-04GA428 | Design of Anti-Vibration Bar | 5 |
| DBD-SO23-365 | Design Basis for Steam Generator and Secondary Side | 10 |

DESIGN CHANGE NOTIFICATIONS/SUPPLIER DEVIATION REQUESTS

| Number | Title | Revision |
|---|---|---|
| NECP 800071703 | Engineering Change Package, "Replacement Steam Generators" | 0 |
| SDR-007 43366-05007 | Circulation Ratio for RSG | 0 |

| Number | Title | Revision |
|---|---|---|
| SDR-037 43366-06037 | Tube-to-Tube Clearance in 2A RSG | 0 |
| SDR-047 43366-07047 | Tool Mark in 3A Tubesheet | 0 |
| SDR-050 43366-07050 | Tool Mark in 3B Tubesheet | 0 |
| SDR-051 43366-07051 | Unit 2A Lower Shell Assembly | 0 |
| SDR-053 43366-07053 | Unit 2B Lower Shell Assembly | 0 |
| SDR-059 43366-08059 | Unit 3B Lower Shell Assembly | 0 |
| SDR-064 43366-08064 | Axial Length of AVB | 0 |
| SDR-079 43366-08079 | Statistical Size of Tube-to-AVB Gap | 0 |
| SDR-082 43366-09082 | Divider Plate Repair of Unit 3 RSGs | 0 |
| SDR-086 10041870-09086 | Specifications for Unit 3 RSG Tube Material | 0 |
| SDR-098 10041870-10098 | Overall Height of 3A RSG | 0 |
| SDR-099 10041870-10099 | Perpendicularity and Parallelism of 3A RSG Key Bracket | 0 |
| SDR-100 10041870-10100 | Parallelism of 3B RSG Key Bracket | 0 |

DRAWINGS

| Number | Title | Revision |
|---|---|---|
| SO23-617-1-D103 | Design Drawing – Component and Outline Drawing 1 / 3 | 5 |
| SO23-617-1-D104 | Design Drawing – Component and Outline Drawing 1 / 3 | 2 |
| SO23-617-1-D106 | Design Drawing Tubesheet and Extension Ring 1 of 3 | 12 |
| SO23-617-1-D107 | Design Drawing Tubesheet and Extension Ring 2 of 3 | 5 |

| Number | Title | Revision |
|---|---|---|
| SO23-617-1-D108 | Design Drawing Tubesheet and Extension Ring 3 of 3 | 8 |
| SO23-617-1-D109 | Design Drawing Lower Shell, Middle Shell, Transition Cone and Upper Shell Stub 1 of 4 | 5 |
| SO23-617-1-D110 | Design Drawing Lower Shell, Middle Shell, Transition Cone and Upper Shell Stub 2 of 4 | 7 |
| SO23-617-1-D111 | Design Drawing Lower Shell, Middle Shell, Transition Cone and Upper Shell Stub 3 of 4 | 4 |
| SO23-617-1-D112 | Design Drawing Lower Shell, Middle Shell, Transition Cone and Upper Shell Stub 4 of 4 | 4 |
| SO23-617-1-D113 | Design Drawing Channel Head 1 of 4 | 9 |
| SO23-617-1-D113 | Design Drawing Channel Head 1 of 4 | 15 |
| SO23-617-1-D114 | Design Drawing Channel Head 2 of 4 | 13 |
| SO23-617-1-D115 | Design Drawing Channel Head 3 of 4 | 5 |
| SO23-617-1-D116 | Design Drawing Tube Bundle 1 of 3 | 1 |
| SO23-617-1-D117 | Design Drawing Tube Bundle 2 of 3 | 1 |
| SO23-617-1-D118 | Design Drawing Tube Bundle 3 of 3 | 3 |
| SO23-617-1-D159 | Design Drawing Upper Shell, Upper Head Ring and Upper Head Top 1 of 4 | 7 |
| SO23-617-1-D160 | Design Drawing Upper Shell, Upper Head Ring and Upper Head Top 2 of 4 | 2 |
| SO23-617-1-D161 | Design Drawing Upper Shell, Upper Head Ring and Upper Head Top 3 of 4 | 4 |
| SO23-617-1-D162 | Design Drawing Upper Shell, Upper Head Ring and Upper Head Top 4 of 4 | 2 |
| SO23-617-1-D210 | Design Drawing of Moisture Separator Assembly 1 of 6 | 10 |
| SO23-617-1-D211 | Design Drawing of Moisture Separator Assembly 2 of 6 | 10 |
| SO23-617-1-D212 | Design Drawing of Moisture Separator Assembly 3 of 6 | 5 |
| SO23-617-1-D274 | Design Drawing Channel Head 4 of 4 | 4 |
| SO23-617-1-D294 | Design Drawing Tube Support Plate Assembly 1 of 3 | 3 |

| Number | Title | Revision |
|---|---|---|
| SO23-617-1-D295 | Design Drawing Tube Support Plate Assembly 2 of 3 | 4 |
| SO23-617-1-D296 | Design Drawing Tube Support Plate Assembly 3 of 3 | 5 |
| SO23-617-1-D383 | Design Drawing – Critical Field Interface Dimensions and Major Tolerances 1 / 3 | 7 |
| SO23-617-1-D391 | Design Drawing Wrapper Assembly 1 of 5 | 5 |
| SO23-617-1-D392 | Design Drawing Wrapper Assembly 2 of 5 | 0 |
| SO23-617-1-D393 | Design Drawing Wrapper Assembly 3 of 5 | 2 |
| SO23-617-1-D394 | Design Drawing Wrapper Assembly 4 of 5 | 2 |
| SO23-617-1-D395 | Design Drawing Wrapper Assembly 5 of 5 | 3 |
| SO23-617-1-D494 | Design Drawing – Divider Plate1 / 2 | 10 |
| SO23-617-1-D495 | Design Drawing – Divider Plate 2 / 2 | 6 |
| SO23-617-1-D507 | Design Drawing Anti-Vibration Bar Assembly 1 of 9 | 4 |
| SO23-617-1-D508 | Design Drawing Anti-Vibration Bar Assembly 2 of 9 | 2 |
| SO23-617-1-D509 | Design Drawing Anti-Vibration Bar Assembly 3 of 9 | 0 |
| SO23-617-1-D539 | Design Drawing Anti-Vibration Bar Assembly 4 of 9 | 0 |
| SO23-617-1-D540 | Design Drawing Anti-Vibration Bar Assembly 5 of 9 | 2 |
| SO23-617-1-D541 | Design Drawing Anti-Vibration Bar Assembly 6 of 9 | 2 |
| SO23-617-1-D542 | Design Drawing Anti-Vibration Bar Assembly 7 of 9 | 8 |
| SO23-617-1-D543 | Design Drawing Anti-Vibration Bar Assembly 8 of 9 | 3 |
| SO23-617-1-D544 | Design Drawing Anti-Vibration Bar Assembly 9 of 9 | 1 |
| SO23-617-1-D680 | Design Drawing – Tubing Expansion and Seal Welding | 3 |
| SO23-617-1-D1099 | Fabrication Drawing – General Shipping Arrangement [SON 2E89; SON 2E882E0-88] | 2 |
| SO23-617-1-D1100 | Fabrication Drawing – General Shipping Arrangement [SON 3E89; SON 3E88] | 2 |
| SO23-617-1-D1488 | Fabrication Drawing – Temporary Attachment For Channel Head and Tubesheet Welding (Unit 3) | 0 |
| L5-04FW111 | Detail of AVB 1 of 5 (Center Narrow AVB) | 6 |

| Number | Title | Revision |
|---|---|---|
| L5-04FW112 | Detail of AVB 2 of 5 (Center Wide AVB) | 2 |
| L5-04FW113 | Detail of AVB 3 of 5 (Side Narrow AVB) | 2 |
| L5-04FW114 | Detail of AVB 4 of 5 (Side Wide AVB for Hot Side) | 2 |
| L5-04FW115 | Detail of AVB 5 of 5 (Side Wide AVB for Cold Side) | 2 |

ENGINEERING REPORTS (ER)

| Number | Title | Revision |
|---|---|---|
| SO23-617-1-M1401 | Divider Plate Weld Joint Separation Root Cause Evaluation Report | 4 |
| SO23-617-1-C157 | Evaluation of Tube Vibration | 3 |
| SO23-617-1-C749 | Analytical Report of AVB Assembly | 4 |
| SO23-617-1-M1265 | Summary Design Report | 8 |
| SO23-617-1-M1231 | Performance Analysis Report | 3 |
| SO23-617-1-C682 | Analytical Report of Separator and Dryer Assemblies | 7 |
| SO23-617-01R3 | Design Report of Tube | 5 |

MHI DOCUMENTS

| Number | Title | Revision/Date |
|---|---|---|
| UHQ-08N013 | MHI Survey Report of Sumitomo Metal Industries, Limited. Steel Tube Works | 0 |
| UHQ-11N010 | MHI Survey Report of Sumitomo Metal Industries, Limited. Steel Tube Works | 0 |
| UHQ-05N015 | MHI Survey Report of Sumitomo Metal Industries, Limited. Pipe & Tube Works | 1 |

| Number | Title | Revision/Date |
|---|---|---|
| UHQ-08N013 | MHI Survey Report of Sumitomo Metal Industries, Limited. Steel Tube Works | 0 |
| UHQ-08N014 | MHI Survey Report of Sumitomo Metal Industries, Limited. Steel Tube Works | 0 |
| UHQ-11S005 | MHI Survey Report of Sumitomo Metal Industries, Limited. Steel Tube Works | 0 |
| UHQ-05N019 | MHI Survey Report of Sumitomo Metal Industries, Limited. Steel Tube Works | 0 |
| BUH94-06 | Quality Assurance Survey/Audit Procedure of Vendors | 6 |
| BUH94-06 | Vendor Evaluation Procedure | 9 |
| BUH94-06 | Vendor Evaluation Procedure | 13 |
| 5ZDD94-06 | Vendor Evaluation Procedure | 1 |
| UHW-68-06A002 | MHI Evaluation on Corrective Action Established by Sumitomo Metal Industries Limited | 0 |
| UHNR-SON-RSG-06N005 | Nonconformance Report for Alloy 690 SG Tubing for SONGS Unit 2 | |
| UHQ-07N004 | MHI Audit Report of Sumitomo Metal Industries, Limited. Steel Tube Woks | 1 |
| UHCP-70N004 | Corrective Action Plan Followup Report | 0 |
| UES-20100006 | Qualified Vendor List | 18 |

| Number | Title | Revision/Date |
|---|---|---|
| UHQ-08N013 | MHI Survey Report of Sumitomo Metal Industries, Limited. Steel Tube Works | 0 |
| L5-04GB004 | Submittal Document Control List | 53 |
| UGNR-SON2-RSG-020 | Nonconformance Report Channel head for Unit 2A | February 2, 2006 |
| UGNR-SON2-RSG-038 | Nonconformance Report Unacceptable local diameter change of tube holes | June 2, 2006 |
| UGNR-SON2-RSG-052 | Nonconformance Report Unacceptable length of 10 tube hole pitch of tube support plate #3 | September 11, 2006 |
| UGNR-SON2-RSG-062 | Nonconformance Report Incorrect end caps of AVB 2ASN154C and AVB 2ASN164C | December 1, 2006 |
| UGNR-SON2-RSG-075 | Nonconformance Report Unacceptable gaps between tubes and AVBs | March 24, 2007 |
| UGNR-SON2-RSG-091 | Nonconformance Report Incorrect machining for steam flow limiting device | September 4, 2007 |
| UGNR-SON2-RSG-096 | Nonconformance Report Unacceptable dimensions for steam flow limiting device of Unit 2A | October 23, 2007 |
| UGNR-SON3-RSG-009 | Nonconformance Report Unacceptable local diameter change of tube holes | May 10, 2007 |
| UGNR-SON3-RSG-024 | Nonconformance Report Some gaps between tubes and AVBs are larger than the criterion | November 30, 2007 |
| UGNR-SON3-RSG-049 | Nonconformance Report Out of tolerance on hand holes inside diameter | March 2, 2009 |

| Number | Title | Revision/Date |
|---|---|---|
| UHQ-08N013 | MHI Survey Report of Sumitomo Metal Industries, Limited. Steel Tube Works | 0 |
| UGNR-SON3-RSG-055 | Nonconformance Report Divider plate metal repair butter/weld crack after post bake | September 11, 2009 |
| UGNR-SON-RSG-06N002 | Nonconformance Report Feedwater nozzle for unit 2 ID: 21721-101 | February 2, 2006 |
| B91U-N0001 | Mitsubishi Heavy Industries Ltd Kobe Shipyard & Machinery Works Quality Assurance Manual (Nuclear) | 39 |
| UES-69-040038 | Mitsubishi Heavy Industries Ltd Kobe Shipyard & Machinery Works Quality Assurance Program Manual (Project Addenda) | 15 |
| UHH-G06A97 | Stop Work Order for FMA (Final Mill Annealing) on Manufacturing of Heat Transfer Tubing for SONGS RSG | 0 |

MISCELLANEOUS DOCUMENTS

| | | |
|---|---|---|
| AR 060500134 | Action Request: Qualification Letter | |
| AR 040901345 | Action Request: Qualification Letter | |
| AR 050301458 | Action Request: Qualification Letter | |
| | Setpoint Transmittal Unit 2 and 3 Gas Monitors | December 6, 2010 |
| | SONGS Unit 3 Chemistry/Operations Logs – SG Event Timeline | January 31, 2012 |
| | Radiation Monitor 3RT-7870 Setpoints | May 31, 2011 |
| | Radiation Monitor 3RT-7818A Setpoints | May 31, 2011 |

| | | |
|---|---|---|
| 2G-030-3 | Condenser Air Ejector Continuous Gas Post-Release Report | January 31, 2012 |
| SO23-617-01 | Specification for Design and Fabrication of RSGs for Unit 2 and Unit 3 | 4 |
| SO23-617-02 | Specification for Baseline Pre-Service Examination (PSE) on Tubing for Replacement Steam Generators | 1 |
| | Updated Final Safety Analysis Report for San Onofre Units 2 and 3 | April 2009 |
| SO23-617-1-M29 | Design Review Item List | 9 |
| DA 2002-92 | Dominion Audit of Mitsubishi Heavy Industries | June 9, 2002 |
| V03-008 | Omaha Public Power District Audit of Mitsubishi Heavy Industries | July 18, 2003 |
| 99901030/2008-201 | Mitsubishi Heavy Industries (MHI), Kobe, Japan, inspection of selected portions of MHI's Quality Assurance (QA) program, and 10 CFR Part 21 program | July 18, 2008 |
| 99901384/2009-201 | Sumitomo Metal Industries, Limited, Higashi-Mukojima Amagasaki, Japan, inspection of selected portions of Sumitomo's quality assurance (QA) program and 10 CFR Part 21 program | November 13, 2009 |
| SMI-AQA-9041 | Reply to Notice of Nonconformance(99901 384/2009-201-01) | 0 |

MODIFICATIONS

| Number | Title | Date |
|---|---|---|
| Engineering Change Package NECP 800071702 | 50.59 Screening and Evaluation for Replacement Steam Generators – Unit 2 | July 31, 2009 |
| Engineering Change Package NECP 800071703 | 50.59 Screening and Evaluation for Replacement Steam Generators – Unit 3 | July 31, 2009 |

NUCLEAR NOTIFICATIONS

| | | | | |
|---|---|---|---|---|
| 201907899 | | | | |
| | | | | |
| | | | | |

*NN's issued as a result of inspection activities.

PROCEDURES

| Number | Title | Revision |
|---|---|---|
| SO123-ODCM | Offsite Dose Calculation Manual | 0 |
| SO123-0-47 | Notification and Reporting of Significant Events | 18 |
| SO123-III-5.9 | Manual Effluent Gaseous Release Permits, Setpoint Calculations, and Monitor Calibration Constant Evaluations | 8 |
| SO123-VIII-1 | EPIP: Recognition and Classification of Emergencies | 36 |
| SD-SO23-310 | System Description - Turbine Building Sampling System | 9 |
| SD-SO23-690 | System Description – Steam Generator E088/089 | 18 |
| SD-SO23-690 | System Description – Steam Generator Radiation Monitors RE-6753 & RE-6759 | 18 |
| SD-SO23-690 | System Description – Condenser Air Ejector Wide Range Radiation Monitors RE-7870A/B & Low Range Radiation Monitors RE-7818 | 18 |
| SB-SO-FB-006 | Divider Plate Weld Joint Repair Procedure | 10 |
| SB-SO-HT-1001 | Post Weld Heat Treatment Procedure | 22 |
| SO123-XXXII-2.27 | Supplier Deviation Requests (SDRs) | 5 |
| SO23-617-1-D104 | Design Drawing - Component and Outline Drawing 2/3 | 2 |
| SO23-617-1-D1099 | General Shipment Arrangement SON-2A | 4 |
| SO23-617-1-M1246 | Hydrostatic Test Procedure | 3 |

| Number | Title | Revision |
|---|---|---|
| SO23-617-1-M139 | Post Weld Heat Treatment Procedure | 21 |
| SO23-617-1-M1395 | Divider Plate Weld Joint Procedure | 9 |
| SO23-617-1-M1398 | Divider Plate Weld Joint Repair Plan | 12 |
| SO23-617-1-M1461 | Additional Post Weld Heat Treatment Procedure for Divider Plate Weld Joint Repair | 0 |
| SO23-617-1-M616 | Tubesheet Drilling Procedure | 9 |
| SO23-617-1-M733 | Helium Leak Test Procedure of the Tube to Tubesheet Welds (High Pressure) | 5 |
| SO23-617-1-M735 | Helium Leak Test Procedure of the Tube to Tubesheet Welds (Low Pressure) | 3 |
| SO23-617-1-M819 | AVB Structure Assembly Procedure | 8 |
| SO23-617-1-M820 | Tubing and AVB Installation Procedure | 6 |
| SO23-617-1-M821 | Anti-Vibration Bar Inspection Procedure (After Assembly) | 5 |
| UGS-L5-050043 | Anti-Vibration Bar Inspection Procedure (Individual Bar) | 1 |
| UGS-L5-050045 | Inspection Procedure for Tube and Anti-Vibration Bar Inspection | 10 |

VENDOR DOCUMENTS

| Number | Title | Revision/Date |
|---|---|---|
| 51-9176667-001 | Engineering Information Record, "SONGS 2C17 & 3C17 Steam Generator Degradation Assessment" | 1 |
| UGNR-SON2-RSG-012 | DI for Tube Support Plate Material | 1 |
| UGNR-SON2-RSG-014 | Discrepancy for tube thickness of TSP between Drawing and Purchase Specification | 0 |
| UGNR-SON2-RSG-015 | Unacceptable Indications by MT for wrapper support of Unit 2 #A | 1 |

| Number | Title | Revision/Date |
|---|---|---|
| UGNR-SON2-RSG-021 | Unacceptable Indications by MT for Anti rotation support of Unit 2 #A | 0 |
| UGNR-SON2-RSG-027 | Unacceptable MT indication for Anti-Rotation Supports | 0 |
| UGNR-SON2-RSG-054 | Unacceptable length of 10 tube hole pitch of tube support Plate # 6 | 1 |
| UGNR-SON2-RSG-058 | Insufficient clearance between the tubes in Row No. 28 and 30 in Column No. 22 | 3 |
| UGNR-SON2-RSG-059 | Insufficient clearance between the tubes in Row No 92 and 94 in Column No. 34 | 0 |
| UGNR-SON2-RSG-067 | Unacceptable Gaps between Tubes and AVBs | 7 |
| UGNR-SON2-RSG-075 | Unacceptable gaps between Tubes and AVBs | 1 |
| UGNR-SON2-RSG-091 | Incorrect Machining for Steam Flow Limiting Device | 0 |
| UGNR-SON2-RSG-103 | Damaged Locking Plates of Vane Jacking Device | 9 |
| UGNR-SON2-RSG-109 | As built dimension of #2A RSG | 1 |
| UGNR-SON2-RSG-112 | As built dimension of #2B RSG | 0 |
| UGNR-SON3-RSG-001 | Tubesheet | 0 |
| UGNR-SON3-RSG-018 | Unacceptable local diameter change of Tube holes | 2 |
| UGNR-SON3-RSG-024 | Some Gaps between Tubes and AVBs are larger than the criterion | 1 |
| UGNR-SON3-RSG-030 | Some gaps between tubes and AVBs are larger than the criterion | 0 |
| UGNR-SON3-RSG-051 | Divider Plate Weld Crack | 16 |
| UGNR-SON3-RSG-052 | Divider Plate Weld Crack | 19 |
| UGNR-SON3-RSG-057 | Extension of Tubesheet PWHT Duration | 1 |

| Number | Title | Revision/Date |
|---|---|---|
| UGNR-SON3-RSG-059 | Out of Tolerance dimensions on Primary Inlet/Outlet Nozzles and Support Skirt | 1 |
| UGNR-SON3-RSG-062 | Out of tolerance dimensions on Primary Inlet/Outlet Nozzles and Support Skirt (#B RSG) | 1 |
| UGNR-SON3-RSG-067 | UT indications in the Alloy 600/690 butter of Divider Plate Weld Groove | 0 |
| UGNR-SON3-RSG-074 | As built dimensions of #3A RSG (Overall Height) | 0 |
| UGNR-SON3-RSG-075 | As built dimension of #3A RSG | 1 |
| UGNR-SON3-RSG-076 | As built dimension of #3B RSG | 0 |
| UHNR-SON3-RSG-07N001 | Divider Plates for Unit 3 | 0 |
| Heat Treatment Record 40010SG-B-900D-R1-68 | Heat Treatment Chart for SG3 | April 4, 2012 |
| SO23-617-1-M149 | Purchase Specification for Heat Transfer Tubing | 4 |
| Fabrication Process Sheet 3901-SG-A-400E (Order 2563901/G101) | Rework of AVB Insertion for SONGS Unit 2 Replacement Steam Generator #A – Lower Portion | 1 |
| Fabrication Process Sheet 3901-SG-A-400D (Order 2563901/2300) | Helium Leak Test for SONGS Unit 2 Replacement Steam Generator #A – Lower Portion | 0 |
| TSN-5050 | Control Document Status list For Alloy 690 SG Tubing | 2 |
| TSN-5051 | Program of Preproduction Qualification (PPQ) For Alloy 690 SG Tubing | 3 |
| TSN-5053 | Melting Procedure for Alloy 690 SG Tubing | 0 |

| Number | Title | Revision/Date |
|---|---|---|
| TSN-5054 | Identification and Traceability Procedure for Alloy 690 SG Tubing | 2 |
| TSN-5055 | Prohibited and Detrimental Material Control Procedure for Alloy 690 SG Tubing | 0 |
| TSN-5072 | Sampling Test Specimen Procedure for Alloy 690 SG Tubing | 2 |
| TSN-5073 | Chemical Analysis Procedure for Alloy 690 SG Tubing | 1 |
| TSN-5074 | Inclusion Test Procedure for Alloy 690 SG Tubing | June 4, 2005 |
| 005F-No.4316 | PPQ Test Results of Alloy 690 SG Tubing for San Onofre Nuclear Generating station Unit 2&3 | 2 |
| 4009-3ir01 | Moody International Ltd Inspection Report of Sumitomo Metal Industries | September 28, 2005 |

## SEQUENCE OF EVENTS

### San Onofre Nuclear Generating Station, Unit 2 and 3 Steam Generators

| Date | Event Description |
|---|---|
| November 2001 | Licensee forms a team to study the viability of replacing the steam generators |
| May 7, 2002 | Vendor benchmarking commences |
| July 2002 | Bechtel replacement study complete |
| November 7, 2003 | Replacement steam generator specification complete |
| December 12, 2003 | Replacement steam generator specification sent to procurement office |
| December 21, 2003 | Replacement steam generator request for proposal issued |
| February 17, 2004 | Bechtel installation study report completed |
| February 27, 2004 | Steam generator replacement request filed with California Public Utility Commission |
| February 27, 2004 | Replacement steam generator bids received by Southern California Edison |
| July 28, 2004 | Replacement steam generator vendor selected |
| August 2, 2004 | Replacement steam generator bid evaluation review board start |
| September 13, 2004 | Replacement steam generator bid evaluation completed |
| September 16, 2004 | Southern California Edison Board of Directors approval for Mitsubishi to design and manufacture steam generators |

| | |
|---|---|
| September 30, 2004 | Replacement steam generator contract signed |
| September 30, 2004 | Fabrication of Unit 2 and Unit 3 steam generators commences at Mitsubishi |
| November 2004 | Southern California Edison performs first full quality assurance audit of Mitsubishi |
| March 2, 2005 | Replacement steam generator installation specification sent to procurement office |
| March 17, 2005 | Mitsubishi/Southern California Edison anti-vibration bar design discussion |
| March 2005 | Southern California Edison performs followup surveillance audit of Mitsubishi |
| March 23, 2005 | Southern California Edison places conditional qualification on Mitsubishi |
| September 21, 2005 | Final environmental impact report released to public |
| October 2005 | Southern California Edison performs followup quality assurance audit of Mitsubishi |
| December 15, 2005 | California Public Utility Commission approval received |
| December 15, 2005 | Installation contract signed with Bechtel |
| February 2006 | Southern California Edison performs followup quality assurance audit of Mitsubishi |
| March 10, 2006 | Edison International Company Board of Directors approval of steam generator replacement project |
| April 22, 2006 | SONGS Unit 2 refueling outage completed |
| May 1, 2006 | Replacement steam generator transportation specification issued |

| | |
|---|---|
| May 10, 2006 | Southern California Edison removes conditional qualification from Mitsubishi |
| September 27, 2006 | Sumitomo Metal Industries issues a non-conformance report on some tubing for non-conformance to specifications associated with the final mill annealing process |
| September 27, 2006 | Mitsubishi issues stop work order to Sumitomo |
| September 28, 2006 | Mitsubishi issues corrective action request to Sumitomo based on the final mill annealing non-conformance report |
| September 29, 2006 | Mitsubishi visits Sumitomo to conduct root cause investigation |
| October 3, 2006 | Mitsubishi visits Sumitomo to confirm the adequacy of the corrective actions taken to address the root cause findings from the September 29, 2006 meeting |
| October 3, 2006 | Mitsubishi releases stop work order after confirming adequacy of Sumitomo's corrective actions |
| November 10, 2006 | Non-conformance report associated with final mill annealing process is closed |
| March 12, 2007 | Corrective action request associated with the final mill annealing non-conformance report closed |
| May 8, 2007 | Mitsubishi performs followup audit at Sumitomo and issues corrective action request for two findings in the audit |
| July 17, 2007 | Sumitomo submits corrective actions taken for the findings of the May 8, 2007 audit; Mitsubishi closes corrective action request. |
| September 13, 2006 | Mitsubishi/Southern California Edison technical meeting regarding anti-vibration bars |
| April 2008 | Fabrication of Unit 2 steam generators complete |
| April – June 2008 | Mitsubishi performs primary and secondary side hydrostatic pressure tests of Unit 2 steam generators |
| July 4, 2008 | AREVA performs baseline pre-service eddy current examinations on steam generator 2E0-89 at Mitsubishi facilities in Kobe, Japan |

| | |
|---|---|
| July 18, 2008 | AREVA performs baseline pre-service eddy current examinations on steam generator 2E0-88 at Mitsubishi facilities in Kobe, Japan |
| September and October 2008 | Final inspection for Unit 2 steam generators is completed. Primary and secondary sides filled with nitrogen. |
| December 16, 2008 | Unit 2 steam generators shipped from Kobe, Japan |
| February 14, 2009 | Unit 2 steam generators arrive at SONGS |
| Early March 2009 | Fabrication of Unit 3 steam generators complete |
| Middle March 2009 | Primary and secondary hydrostatic pressure tests conducted on Unit 3 steam generators |
| March 18, 2009 | Unit 3 divider plate weld failure discovered |
| March – July 2009 | Root cause evaluation of the divider plate-to-tubesheet weld conducted by Mitsubishi |
| March – June 2009 | Repair procedures developed for Unit 3 steam generators |
| June 2009 | Repair work on Unit 3 steam generators commences |
| July 2009 | AREVA performs final pre-service eddy current examinations on Unit 2 steam generators at SONGS |
| September 2009 – April 2010 | Unit 2 performs a refueling outage and installs the replacement steam generators |
| March 29, 2010 | Repair work to Unit 3 steam generator 3E0-89 complete |
| April 5, 2010 | Repair work to Unit 3 steam generator 3E0-88 complete |
| April 2010 | Unit 2 recommences power operations |

| | |
|---|---|
| April 18, 2010 | Unit 3 steam generator 3E0-89 passes primary side hydrostatic pressure retest |
| April 24, 2010 | Unit 3 steam generator 3E0-88 passes primary side hydrostatic pressure retest |
| June 2010 | AREVA performs baseline pre-service eddy current examinations on Unit 3 steam generators at Mitsubishi facilities in Kobe, Japan |
| August 2, 2010 | Unit 3 steam generators shipped |
| October 4, 2010 | Unit 3 steam generators arrive at SONGS |
| October 2010 – February 2011 | Unit 3 performs a refueling outage and installs the replacement steam generators |
| February 2011 | Unit 3 recommences power operations |
| January 10, 2012 | Unit 2 refueling outage start |
| January 31, 2012 | Unit 3 tube leak; rapid shutdown commences |
| February 2, 2012 | Unit 3 reaches cold shutdown conditions |
| February 12, 2012 | Unit 3 eddy current inspections commence on both steam generators |
| March 13, 2012 | In-situ pressure testing commences on tubes in steam generator 3E0-88 of Unit 3 |
| March 14, 2012 | In-situ pressure test failures on tubes located in Row 106 Column 78, Row 102 Column 78, and Row 104 Column 78 of steam generator 3E0-88 |
| March 15, 2012 | In-situ pressure test failures on tubes located in Row 100 Column 80, Row 107 Column 77, Row 101 Column 81, and Row 98 Column 80 of steam generator 3E0-88 |
| March 16, 2012 | In-situ pressure test failure on tube located in Row 99 Column 81 of steam generator 3E0-88 |

| | |
|---|---|
| March 16 – 21, 2012 | The 65 remaining tubes in steam generator 3E0-88 pass in-situ pressure testing |
| March 15 – 21, 2012 | The 56 identified tubes in steam generator 3E0-89 of Unit 3 are in-situ pressure tested and all tubes passed. |
| March 19 – 29, 2012 | NRC Augmented Inspection Team performs inspections at SONGS |
| March 23, 2012 | NRC received a letter from SCE outlining their commitments for corrective actions prior to restart of both Unit 2 and Unit 3 |
| March 27, 2012 | NRC issues a Confirmatory Action Letter to Southern California Edison |
| June 18, 2012 | NRC conducts public Augmented Inspection Team exit meeting near SONGS |

UNITED STATES
NUCLEAR REGULATORY COMMISSION
REGION IV
1600 EAST LAMAR BLVD
ARLINGTON, TEXAS 76011-4511

Mr. Peter Dietrich
Senior Vice President and
Chief Nuclear Officer
Southern California Edison Company
San Onofre Nuclear Generating Station
P.O. Box 128
San Clemente, CA 92674-0128

SUBJECT: SAN ONOFRE NUCLEAR GENERATING STATION – NRC AUGMENTED INSPECTION TEAM REPORT 05000362/2012007

Dear Mr. Dietrich:

The U. S. Nuclear Regulatory Commission (NRC) completed an inspection at your San Onofre Nuclear Generating Station (SONGS). The enclosed report documents the inspection results, which were discussed with you and other members of your staff during a public exit meeting on June 18, 2012.

Unit 3 had been operating for approximately one year following replacement of the steam generators when control room operators received alarms on January 31, 2012, that indicated reactor coolant was leaking into steam generator 3E0-88. The leak was unexpected, and the control room operators responded in accordance with their procedures to perform a rapid shutdown, since the leak, although small, had increased enough in a short period of time to warrant the precautionary shutdown. The estimated leak rate was 75 gallons per day. The facility license allows full power operation with a steady leak rate of less than 150 gallons per day.

The first indication of the leak was main condenser air ejector radiation monitors reaching their alarm set point. The radiation monitors continuously sample from a vent stack for the purpose of rapidly identifying steam generator tube leaks. This was a direct release of radioactivity to the atmosphere, which is allowed by the facility license, up to limits in the regulations. The licensee reviewed the amount of gaseous radioactivity released and estimated a dose of approximately 0.0000452 mrem to a member of the public. The annual regulatory limit to a member of the public is 100 mrem per year. During a radiation protection inspection the week of February 13, 2012, the team reviewed the licensee dose estimates and did not identify any issues.

Unit 3 control room operators performed a controlled shutdown of Unit 3 on January 31, 2012, and reached cold shutdown conditions on February 2, 2012. The operators then prepared the steam generators for tube inspections, which were started on February 12, 2012. The first

inspection confirmed the location of the leak in steam generator 3E0-88. One tube was found with a small leak and no other tubes were leaking.

The licensee completed an extensive and expanded eddy current inspection of 100 percent of the steam generator tubes in both Unit 3 steam generators. Following pre-established testing requirements, the licensee identified 129 tubes in Unit 3 (56 tubes in steam generator 3E0-89 and 73 tubes in steam generator 3E0-88) that required in-situ pressure testing. This testing began on March 13, 2012, and was performed under ambient conditions.

Of the 129 tubes tested, a total of 8 tubes failed in-situ pressure testing. All of the failed tubes occurred in steam generator 3E0-88. Three of the tubes failed at or below a test pressure (3200 psi) equivalent to a design basis main steam line break differential pressure and temperature. The remaining five tubes failed near, but below the maximum differential test pressure of 5250 psig. This test pressure was equivalent to the minimum burst pressure capacity required by the plant technical specifications.

In accordance with Management Directive 8.3, "NRC Incident Investigation Program," deterministic and conditional risk criteria were used to evaluate the level of NRC response for this operational event. This event met three deterministic criteria (involved a major deficiency in design having potential generic safety implications; led to a significant loss of integrity of the primary coolant pressure boundary; and, involved an emergency or non-emergency event or situation, related to the health and safety of the public or on-site personnel or protection of the environment, for which a 10 CFR 50.72 report has been submitted that is expected to cause significant, heightened public or government concern) and the conditional large early release probability for the event was estimated to be in the overlap range for a special inspection/augmented inspection. Based on deterministic criteria being met and the risk assessment of this condition, Region IV, in consultation with the Office of Nuclear Reactor Regulation and Office of Nuclear Security and Incident Response, concluded that the NRC response should be an augmented team inspection.

This augmented inspection was chartered, in part, to identify the circumstances surrounding the tube degradation; review the licensee's actions following discovery of the conditions; evaluate the licensee's review of potential causes of the unusual steam generator tube wear; review the steam generator modeling; and, assess the differences between Unit 2 and Unit 3 steam generators.

Based on inspection, the team concluded that: (1) plant operators responded to the event in accordance with procedures in a manner that protected public health and safety; (2) safety systems were maintained and responded in accordance with the plant design; and (3) the loss of steam generator tube integrity was a serious safety issue that must be resolved. The purpose of this inspection was to gather facts and identify issues requiring followup, and, as such, no findings were identified. Ten items requiring additional followup are documented as unresolved items in the enclosed report.

In accordance with 10 CFR 2.390 of the NRC's "Rules of Practice," a copy of this letter, its enclosure, and your response (if any) will be available electronically for public inspection in the NRC Public Document Room or from the Publicly Available Records (PARS) component of the NRC's document system (ADAMS). ADAMS is accessible from the NRC Web site at http://www.nrc.gov/reading-rm/adams.html (the Public Electronic Reading Room).

Sincerely,

Elmo E. Collins
Regional Administrator

Docket No.: 05000362
License No: NPF-15

Enclosure: Inspection Report 05000362/2012-007
w/Attachment: Supplemental Information

cc w/ encl: Electronic Distribution

DISTRIBUTION:
Regional Administrator
(Elmo.Collins@nrc.gov)
Deputy Regional Administrator
(Art.Howell@nrc.gov)
DRP Director (Kriss.Kennedy@nrc.gov)
DRP Deputy Director (Troy.Pruett@nrc.gov)
DRS Director (Tom.Blount@nrc.gov)
DRS Deputy Director
(Patrick.Louden@nrc.gov)
Senior Resident Inspector
(Greg.Warnick@nrc.gov)
Resident Inspector
(John.Reynoso@nrc.gov)
SONGS Administrative Assistant
(Heather.Hutchinson@nrc.gov)
Branch Chief, DRS/PSB2
(Greg.Werner@nrc.gov)
Branch Chief, DRP/D
(Ryan.Lantz@nrc.gov)
Senior Project Engineer, DRP/D
(Nick.Taylor@nrc.gov)
Project Engineer, DRP/D
(David.You@nrc.gov)
Project Engineer, DRP/D
(Brian.Parks@nrc.gov)
Public Affairs Officer
(Victor.Dricks@nrc.gov)
Public Affairs Officer
(Lara.Uselding@nrc.gov)
Branch Chief, DRS/TSB
(Ryan.Alexander@nrc.gov)
RITS Coordinator
(Marisa.Herrera@nrc.gov)
Regional Counsel (Karla.Fuller@nrc.gov)
Congressional Affairs Officer
(Jenny.Weil@nrc.gov)
OEMail Resource
RIV/ETA: OEDO
(Michael.McCoppin@nrc.gov)
DRS/TSB STA (Dale.Powers@nrc.gov)
RSLO (Bill.Maier@nrc.gov)
D/DIR, DORL (Louise.Lund@nrc.gov)
PM (Randy.Hall@nrc.gov)
D: NRR (Eric.Leeds@nrc.gov)
D: NSIR (Jim.Wiggins@nrc.gov)
D: NRO (Michael.Johnson@nrc.gov)
NRR/LPL4 (Michael.Markley@nrc.gov)
NRR/IOEB (Harold.Chernoff@nrc.gov)
EDO (Bill.Borchardt@nrc.gov)
DEDR (Martin.Virgilio@nrc.gov)

DOCUMENT NAME: S:DRS\REPORTS\SONGS 2012007 AIT-GEW ML12188A748

| | | | | | |
|---|---|---|---|---|---|
| SUNSI Rev Compl. | ☑Yes ☐ No | ADAMS | ☑Yes ☐ No | Reviewer Initials | GEW |
| Publicly Avail. | ☑Yes ☐ No | Sensitive | ☐Yes ☑ No | Sens. Type Initials | GEW |

| | | | | | |
|---|---|---|---|---|---|
| AIT Member/RIV | AIT Member/RII | AIT Member/NRO | AIT Member/NRR | AIT Member/NRR | AIT Member/RES |
| JReynoso | JRivera-Ortiz | JOrtega-Luciano | EMurphy | AJohnson | CThurston |
| | | | | | |
| 07/ /12 | 07/ /12 | 07/ /12 | 07/ /12 | 07/ /12 | 07/ /12 |
| AIT Team Leader/RIV | D:DRS | RA | | | |
| GWerner | TBlount | ECollins | | | |
| | | | | | |
| 07/ /12 | 07/ /12 | 07/ /12 | | | |

OFFICIAL RECORD COPY

**ENCLOSURE**

**U.S. NUCLEAR REGULATORY COMMISSION**
**REGION IV**

| | |
|---|---|
| Docket: | 05000362 |
| License: | NPF-15 |
| Report: | 05000362/2012007 |
| Licensee: | Southern California Edison Company |
| Facility: | San Onofre Nuclear Generating Station |
| Location: | 5000 S. Pacific Coast Hwy<br>San Clemente, California |
| Dates: | March 15 through June 18, 2012 |
| Team Leader: | G. Werner, RIV/Branch Chief/Plant Support Branch 2 |
| Inspectors: | A. Johnson, NRR/Materials Engineer<br>E. Murphy, NRR/Senior Materials Engineer<br>J. Ortega-Luciano, NRO/Reactor Operations Engineer<br>J. Reynoso, RIV/Resident Inspector<br>J. Rivera-Ortiz, RII/Senior Reactor Inspector<br>C. Thurston, RES/Reactor Systems Engineer |
| Approved By: | Elmo E. Collins, Regional Administrator |

## TABLE OF CONTENTS


**SUMMARY OF FINDINGS** ..... 4

**EXECUTIVE SUMMARY** ..... - 1 -

1.0 Description of Event (Charter Item 1) ..... - 2 -

1.1 Sequence of Events ..... - 2 -

1.2 System Descriptions ..... - 5 -

1.3 Resident Inspectors' Assessment of Steam Generator Tube Leak Event Response ..... - 7 -2

1.4 Description of Steam Generator Inspections at SONGS Unit 2 ..... - 9 -

1.5 Description of Steam Generator Inspections at SONGS Unit 3 ..... - 11 -

1.6 In-Situ Pressure Testing ..... - 13 -

2.0 Probable Cause Evaluation (Charter Item 2) ..... - 15 -

2.1 SONGS Cause Evaluation ..... - 15 -

2.2 Mitsubishi Cause Evaluation ..... - 16 -

3.0 Operational Differences in Configuration and Operation Between Unit 2 and 3 (Charter item 3) ..... - 19 -

4.0 Design and Manufacturing Differences (Charter Item #4) (Mitsubishi Heavy Industries Charter Item 1) ..... - 21 -

5.0 Quality Assurance/Quality Control (Charter Item 5) (Mitsubishi Charter Item 4) ..... - 34 -

5.1 SONGS Quality Assurance/Quality Control ..... - 35 -

5.2 Mitsubishi Heavy Industries Quality Assurance/Quality Control ..... - 36 -

5.3 Quality Assurance Conclusion ..... - 39 -

6.0 Implementation of Steam Generator Industry Information (Charter Item 6) (Mitsubishi Heavy Industries Charter Item 3) ..... - 39 -

7.0 Packing, Shipping, Handling, and Receipt Inspection (Charter Item 7) ..... - 42 -

8.0 Thermal-hydraulic and Flow Induced Vibration Modeling (Charter Item 8) ..... 50

8.1 Thermal-hydraulic Assessments ..... - 46 -

8.2 NRC ATHOS Results ..... - 50 -

8.3 Conclusion ..... - 54 -

9.0 Risk Assessment (Charter Item 9) ..... - 55 -

10.0 Assess Quality Assurance, Radiological Controls, and Safety Culture Components (Charter Item 10) ..... - 55 -

11.0 Operational impacts from Unit 3 to Unit 2 (Charter Item 11) ..... - 56 -

12.0 Mitsubishi Divider Plate Manufacturing and Weld Issues (Mitsubishi Heavy Industries Charter Item 2) ..... - 57 -

13.0 Office of Nuclear Reactor Regulation Review of SONGS 50.59 Evaluation ..... - 61 -

14.0 Exit Meeting Summary ..... - 63 -

ATTACHMENT 1: SUPPLEMENTAL INFORMATION ..... A1-1
ATTACHMENT 2: SEQUENCE OF EVENTS..... A2-1

## SUMMARY OF FINDINGS

IR 05000362/2012007, 03/15/2012 through 06/18/2012, San Onofre Nuclear Generating Station; Augmented Inspection Team.

An Augmented Inspection Team was approved on March 16, 2012. Two inspectors on the team were onsite observing in-situ pressure testing the week of March 12. The remaining inspectors were dispatched to the site on March 19, 2012, to assess the facts and circumstances surrounding the tube leak and unexpected wear of tubes in Unit 3 steam generators. The Augmented Inspection Team was established in accordance with NRC Management Directive 8.3, "NRC Incident Investigation Program," and implemented using Inspection Procedure 93800, "Augmented Inspection Team." The inspection was conducted by a team of inspectors from the NRC's Region IV and Region II offices, the resident inspector from San Onofre Nuclear Generating Station, one engineer from the NRC Office of New Reactors, two engineers from the NRC Office of Nuclear Reactor Regulation, and one engineer from the NRC Office of Research. The team identified 10 issues that will require additional NRC inspection. These issues are tracked as unresolved items in this report.

A. NRC-Identified and Self-Revealing Findings

None

B. Licensee-Identified Violations

None

## EXECUTIVE SUMMARY

On January 31, 2012, San Onofre Nuclear Generating Station (SONGS) Unit 3 control room operators received an alarm that indicated a primary-to-secondary reactor coolant leak from steam generator 3E0-88. Although the leak rate was small, it increased enough in a short period of time for the licensee to perform a rapid shutdown. The estimated leak rate was 75 gallons per day. The facility license allows full power operation with a steady state leak rate of less than 150 gallons per day. On February 2, 2012, Unit 3 reached cold shutdown conditions.

On February 12, 2012, Southern California Edison (SCE) commenced eddy current inspections of 100 percent of the tubes in both Unit 3 steam generators. During these inspections, the licensee discovered unexpected wear in both steam generators, including wear at retainer bars (similar to the wear found in Unit 2 steam generators) and significant tube-to-tube wear in the free-span areas. The inspections identified 56 tubes in steam generator 3E0-89 and 73 tubes in steam generator 3E0-88 that SCE performed in-situ pressure testing on to determine if they meet the structural integrity requirements in plant technical specifications.

From March 13 – 21, 2012, AREVA conducted in-situ pressure testing of the suspect tubes in both steam generators. There were a total of eight tube failures during testing, all in steam generator 3E0-88. These tubes failed to satisfy the tube integrity performance criteria. At the time of the augmented inspection team inspection, no stabilization or plugging of tubes had been performed in Unit 3 because the licensee was still conducting a cause evaluation of the failed tubes. There were two members of the Augmented Inspection Team on-site during the week of March 12 that observed portions of the in-situ pressure testing.

On March 23, 2012, NRC received a letter from SCE outlining their commitments for corrective actions prior to restart of both Unit 2 and Unit 3.

On March 27, 2012, the NRC issued a Confirmatory Action Letter to SCE, which outlined specific actions the licensee must complete before restarting Units 2 and 3 that included indentifying the cause of the tube wear; taking corrective actions to prevent loss of tube integrity; and performing a mid-cycle outage to perform tube inspections.

From March 19 – 29, 2012, the NRC Augmented Inspection Team performed on-site inspections at SONGS. After the on-site portion was completed, the team continued to review various documents and attended a number of expert panels associated with the cause evaluations, thermal/hydraulic modeling, and Unit 2 operational assessment. The team identified ten unresolved items that warranted additional followup: (1) adequacy of the post trip/transient procedure; (2) evaluation and disposition of the Unit 3 loose parts monitor alarms; (3) design of retainer bar; (4) control of original design dimensions; (5) evaluation of and controls for divider plate repair; (6) atmospheric controls of Unit 3 steam generators during shipment; (7) no tube bundle support used during shipping; (8) evaluation and disposition of accelerometers; (9) adequacy of Mitsubishi's thermal-hydraulic model; and (10) change of methodologies associated with 10 CFR 50.59 review.

The team's findings included: (1) plant operators responded to the event in accordance with procedures in a manner that protected public health and safety; (2) equipment responded in accordance with the plant design; and (3) the cause evaluations for Unit 2 and Unit 3 tube wear were appropriate.

At the time of the leak on Unit 3 steam generator 3E0-88, Unit 2 had completed eddy current testing of all the tubes in both steam generators as part of their first refueling outage subsequent to the steam generators being replaced in 2009. The eddy current testing did identify significant tube wear around the upper retainer bar, with one tube requiring in-situ pressure testing. Wear indications were found at anti-vibration bar supports, tube support plates and at a foreign object (that was removed). Southern California Edison did determine the cause of tube wear in Unit 2 to be from vibration of the tubes against the retainer and anti-vibration bars. Initially, no tube-to-tube wear was identified. Because of the extensive tube-to-tube wear identified on Unit 3, SCE conducted additional eddy current testing on 1375 tubes on each Unit 2 steam generator. This testing was completed using a more sensitive probe in the same area where tube-to-tube wear was identified on Unit 3. The licensee identified that two tubes in Unit 2 exhibited tube-to-tube wear similar to the wear identified in Unit 3 steam generators. Initially, these findings resulted in a total of 94 plugged tubes, with 15 tubes stabilized in steam generator 2E0-89. For steam generator 2E0-88 this initially resulted in 98 plugged tubes, with 18 tubes stabilized. Additional plugging and stabilizing was completed for Unit 2 steam generators to address the causes of tube-to-tube wear identified. The corrective actions taken to address the causes of the tube-to-tube wear will be inspected as part of the Confirmatory Action Letter and documented in Inspection Report 05000361, 362/2012009.

Overall, the team concluded that SCE was pursuing the causes of the unexpected Unit 3 steam generator tube-to-tube degradation. In an effort to identify the causes, SCE brought in a large number of outside industry experts, consultants, and steam generator manufacturers, including Westinghouse and AREVA to perform thermal-hydraulic and flow induced vibration modeling and analysis. The licensee identified the most probable causes of the tube-to-tube wear as a combination of higher than predicted thermal/hydraulic conditions and improvements in the manufacturing of the Unit 3 steam generators. The improvements in the manufacturing resulted in less contact forces between the anti-vibration bars and the tubes. The combination of these causes allowed fluid-elastic instability vibration to occur. Additional on-site inspection will be required to review and closeout the unresolved items.

## 1.0 Description of Event (Charter Item 1)

### 1.1 Sequence of Events

In November 2001, SCE formed a team to study the viability of replacing the Unit 2 and Unit 3 original steam generators. The licensee performed an assessment of six steam generator vendors, which included vendor benchmarking, development of the replacement steam generator design specifications, a steam generator request for proposal, and a steam generator bid evaluation. In September 2004, the licensee selected Mitsubishi Heavy Industries (Mitsubishi) as the manufacturer of the replacement steam generator.

A general description and comparison of the Unit 2 and Unit 3 steam generators is included in Section 1.2.1 of this report.

In September 2004, Mitsubishi commenced fabrication of Unit 2 steam generators 2E0-89 and 2E0-88, and completed fabrication in April 2008.

At the time of the contract signing in September 2004, Mitsubishi had a quality assurance program in place that had been approved by the licensee, by taking credit for other utilities' reviews of Mitsubishi's quality assurance program. The licensee informed Mitsubishi that once enough fabrication was underway to support an evaluation, the licensee would perform an audit to confirm that their quality assurance program was operating properly.

In November 2004, the licensee performed an audit of the Mitsubishi quality assurance program at their facilities in Kobe, Japan, and then followed up with a surveillance inspection in March 2005. As a result of these two inspection activities, the licensee informed Mitsubishi that additional oversight of Mitsubishi's design control activities was required. The licensee informed Mitsubishi that the additional oversight conditions would remain in place until such time that Mitsubishi had demonstrated improved design control performance, which would be verified by the licensee. After implementing the extra quality control steps, Mitsubishi submitted a letter to SCE stating that they were ready for the conditional qualification to be lifted. The licensee performed followup audits of Mitsubishi in October 2005 and February 2006, but still found enough instances of design control issues that the additional oversight requirements of the conditional qualification were not lifted. In May 2006, SCE was able to verify that Mitsubishi had demonstrated improved design control performance and therefore removed the conditional qualification of Mitsubishi.

After fabrication of the Unit 2 steam generators was complete in April 2008, Mitsubishi performed hydrostatic pressure tests of the primary and secondary sides of the Unit 2 steam generators. In July 2008, after completion of the hydrostatic pressure tests, AREVA performed the baseline eddy current pre-service examinations of the Unit 2 steam generators at the Mitsubishi facilities in Japan. The final inspections for the Unit 2 steam generators were completed in September and October 2008, followed by filling the primary and secondary sides of the Unit 2 steam generators with nitrogen. The Unit 2 steam generators were shipped from the Mitsubishi facilities in December 2008 and received on site at SONGS in February 2009. In July 2009, AREVA performed the final eddy current pre-service examination on the Unit 2 steam generators at SONGS. The baseline and final eddy current pre-service examinations were performed in Japan and at SONGS, respectively, to assess whether any changes to the steam generator tubing had resulted from shipping, and no changes were identified.

The Unit 2 steam generators were installed during a refueling outage, between September 2009 and April 2010. On April 13, 2010, Unit 2 returned to power operations. Engineering inspectors performed inspections in accordance with procedures IP 50001, Steam Generator Replacement Inspection and IP 71111.17, Evaluations of Changes, Tests, or Experiments and Permanent Plant Modifications. The results of the inspections of the replacement steam generators for Unit 2 are documented in NRC Inspection Report 05000361/2009007.

The fabrication of the Unit 3 steam generators 3E0-89 and 3E0-88 was completed between September 2004 and April 2010. The design specifications of the Unit 2 and Unit 3 steam generators were the same when the contract between the licensee and Mitsubishi was signed; however, due to a fabrication issue, there was a modification to the divider plate-to-channel head weld requirements for the Unit 3 steam generators,

and to the classification of the Unit 3 tubesheet material. The specifics of these modifications are discussed further in Section 1.2.a of this report.

In March 2009, after initial fabrication of the Unit 3 steam generators was complete, Mitsubishi performed hydrostatic pressure tests of the primary and secondary sides of the Unit 3 steam generators. After completion of the hydrostatic pressure tests, a visual inspection of the steam generator reactor coolant side revealed cracks in the welds that join the divider plate to the channel head of both steam generators.

From March through July of 2009, Mitsubishi performed a root cause evaluation, which showed that a change in the weld preparation process for the divider plate-to-channel head weld had resulted in the cracking of the weld. A repair procedure was developed and repair work on the Unit 3 steam generators began in June 2009. The repairs to the Unit 3 steam generators were completed in late March (3E0-89) and early April (3E0-88) of 2010. In late April 2010, the Unit 3 steam generators passed the primary hydrostatic pressure re-tests. In June 2010, AREVA performed a final eddy current pre-service examination of the steam generators at the Mitsubishi facilities in Japan, and this was used as the baseline pre-service examination for the Unit 3 steam generators. The steam generators were shipped from the Mitsubishi facilities in Japan in early August 2010, and arrived at SONGS in early October 2010.

The Unit 3 steam generators were installed during a refueling outage, between October 2010 and February 2011. On February 18, 2011, Unit 3 returned to power operations. Engineering inspectors performed inspections in accordance with procedures IP 50001, Steam Generator Replacement Inspection and IP 71111.17, Evaluations of Changes, Tests, or Experiments and Permanent Plant Modifications. The results of the inspections of the replacement steam generators for Unit 3 are documented in NRC Inspection Report 05000362/2010009.

Unit 2 was shut down for a scheduled refueling outage on January 10, 2012. Steam generator tubing inspections in steam generator 2E0-89 found unexpected wear caused by retainer bars on two tubes that required plugging in accordance with the technical specifications. Steam generator tubing inspections in steam generator 2E0-88 found wear on four tubes that required plugging in accordance with the technical specifications. Anti-vibration bars caused the wear on two of the tubes and retainer bars caused the wear on the other two tubes. Because of the unexpected wear, the licensee preventatively plugged 94 tubes in steam generator 2E0-89 and 98 tubes in steam generator 2E0-88. Fifteen of the tubes in steam generator 2E0-89 were stabilized prior to plugging, and 18 of the tubes in steam generator 2E0-88 were stabilized prior to plugging. Additional details of the inspections of the Unit 2 steam generators are provided in section 1.4 of this report

On January 31, 2012, Unit 3 control room operators received an alarm that indicated a primary-to-secondary reactor coolant leak from steam generator 3E0-88. The alarm received was from the main condenser air ejector radiation monitors, which continuously samples from a vent line for the purpose of rapidly identifying steam generator tube leaks. Although the leak rate was small, it increased enough in a short period of time for the licensee to perform a rapid shutdown. The estimated leak rate was 75 gallons per day. The facility license allows full power operation with a steady state leak rate of less

than 150 gallons per day. On February 2, 2012, Unit 3 reached cold shutdown conditions. The licensee reviewed the amount of gaseous radioactivity released and estimated a dose of approximately 0.0000452 mrem to a member of the public. The annual regulatory limit to a member of the public is 100 mrem per year. This unplanned offsite release of radioactivity was reviewed by Region IV health physicist inspectors who confirmed SONGS' offsite dose estimate (see Section 10 for additional details).

After shutdown, the licensee started preparations for performing inspections of Unit 3 steam generators 3E0-89 and 3E0-88. The steam generator tube inspections commenced on February 12, 2012, and confirmed the location of the leak in steam generator 3E0-88 as coming from the tube in Row 106 Column 78. No other tubes were found to be leaking. The licensee then performed eddy current inspections of 100 percent of the tubes in both Unit 3 steam generators. During these inspections, the licensee discovered unexpected wear in both steam generators, including wear at retainer bars (similar to the wear found in Unit 2 steam generators) and significant tube-to-tube wear in the freespan areas (u-bend area of the tubes). The inspections identified 56 tubes in steam generator 3E0-89 and 73 tubes in steam generator 3E0-88 that SCE performed in-situ pressure testing on to determine if they meet the structural integrity requirements in plant technical specifications. Additional details of the inspections of the Unit 3 steam generators are provided in section 1.5 of this report

From March 13 – 21, 2012, AREVA conducted in-situ pressure testing of the suspect tubes in both steam generators. There were a total of eight tube failures during testing, all in steam generator 3E0-88. These tubes failed to satisfy the tube integrity performance criteria in the technical specifications. Additional details of the in-situ pressure tests are provided in Section 1.6 of this report.

From March 19 – 29, 2012, the NRC augmented inspection team performed inspections onsite at SONGS.

On March 27, 2012, the NRC issued a Confirmatory Action Letter to SCE, which outlined specific actions for each unit that the licensee must complete before restarting Unit 2 and Unit 3.

A more detailed sequence of events can be found in Attachment 2.

1.2 System Descriptions

a. Replacement Steam Generators

The Unit 2 and Unit 3 replacement steam generators contain thermally treated Alloy 690 tubing in a u-bend configuration, with a nominal outside diameter of 0.750 inches and a nominal wall thickness of 0.043 inches. There are 9727 tubes within each steam generator, which are arranged in 142 rows and 177 columns. The rows and columns are arranged in a nominal 1.000 inch triangular pitch (results in approximately 0.25 inches of clearance between tubes). The first thirteen rows of tubes were thermally stress relieved after bending to reduce susceptibility to stress corrosion cracking. The tubes were hydraulically expanded to the full depth of the tubesheet, which has a nominal thickness of 28.19 inches. Seven tube support plates made of Type 405

stainless steel provide lateral support the tubes. The tube support plates contain broached trefoil holes with chamfered lands. Support of the tubes in the upper bundle is provided by six sets of Type 405 stainless steel, V-shaped, anti-vibration bars.

The original Model 3410 steam generators at Unit 2 and Unit 3 were manufactured by Combustion Engineering. Each steam generator had 9,350 mill-annealed, Alloy 600 tubes, which were a combination of u-bend tubes and tubes with two 90 degree bends (also called square bends). The tubes had a nominal outside diameter of 0.750 inches, and a nominal wall thickness of 0.048 inches. The tubes were expanded through the full depth of the tubesheet using an explosive process, and lateral support was provided by a number of lattice-grid (i.e., eggcrate) carbon steel tube supports. Tube support in the upper bundle was provided by carbon steel diagonal bars (commonly called batwings) and vertical straps. The original steam generators contained a cylindrically shaped support structure beneath the center of the tubesheet (called the stay cylinder) that provided structural support to the large diameter tubesheet.

Southern California Edison reviewed Information Notices, Generic Letters, Bulletins, and industry operational experience associated with steam generator issues when developing the design specifications for the replacement steam generators. Some of the changes are summarized below, for additional information see Section 6 of this report.

The design changes between the original and replacement steam generators noted above are commonly used in replacement steam generators today. The thermally treated Alloy 690 tubing provides increased resistance to stress corrosion cracking as compared to thermally treated Alloy 600 tubing. The use of type 405 stainless steel (in lieu of carbon steel) for tube support plates eliminates the denting phenomenon associated with drilled carbon steel support plates. The use of broached trefoil holes (instead of drilled holes) in tube support plates reduces the number of contact points with tubes and increases flow area between the tube and tube support plate, thereby reducing the potential for corrosion products to buildup between the tube and the tube support plate. Combustion Engineering steam generators with the batwing design have typically suffered from wear on tubes (from the batwings) in the central stay cylinder region, due to higher cross flow velocities in this portion of the steam generators. In an effort to eliminate this high flow region, the replacement steam generators were designed with a thicker tubesheet that was inherently more rigid, and thus did not require the central stay cylinder. By choosing a design with all u-bend tubes, the bat wing design was eliminated and a new anti-vibration bar assembly was used. The new anti-vibration bar assembly is a free floating design that is supported by the tube bundle and is not attached to the tube bundle wrapper.

b. Channel Head-to-Divider Plate Weld

On March 18, 2009, after completion of the primary and secondary side hydrostatic pressure tests, a crack in the weld between the divider plate and the channel head on Unit 3 steam generator 3E0-88 was identified . Examination showed that the dissimilar metal weld, between the Alloy 690 divider plate and the low alloy steel channel head, had separated. Specifically, the failure occurred between the channel head and the Alloy 152 butter weld, which is the weld filler wire equivalent of Alloy 690. Upon examination, a similar weld failure was found in steam generator 3E0-89 although the

size of the failure was not as large.

Mitsubishi performed a root cause evaluation and found that air carbon-arc gouging was used to remove the stainless steel cladding from the channel head, in preparation for making the divider plate-to-channel head dissimilar metal weld. The air carbon-arc gouging had resulted in carbon deposits in the channel head that were not completely removed by grinding that was performed after the gouging operation. The high carbon area increased the hardness of the channel head (due to carburization) and was the most probable cause of the failure between the channel head and the Alloy 152 butter weld. Mitsubishi also found that it was possible, but less probable, that the increased hardness of the channel head promoted hydrogen induced cracking in areas of the divider plate-to-channel head weld that had higher local stresses due to geometric configurations (i.e., at the corner of the divider plate).

1.3 Resident Inspectors' Assessment of Steam Generator Tube Leak Event Response

a. Inspection Scope

On January 31, 2012, the resident inspectors were on-site during the Unit 3 steam generator tube leak event. The resident inspectors observed the licensee's response to the steam generator tube leak from the control room; and observed the rapid shutdown, actions to cool the plant down, actions performed during recovery of plant systems, and other operator actions. Additionally, the resident inspectors conducted a review of control room activities and equipment response to determine if the operating crew responded appropriately and if the plant systems responded as expected during the event. The resident inspectors conducted interviews with various on-shift personnel and reviewed the post trip report, which included control room logs, operator statements, and plant data trends to assess overall performance of the crew. The review also included procedure use and adequacy of the guidance used for event response, placing the plant in a safe and stable condition, establishing appropriate parameter limits for plant cooldown, and conducting the cooldown to cold shutdown conditions. With respect to operator awareness and decision making, the resident inspectors were specifically focused on the effectiveness of control board monitoring, technical decision making, and work practices of the operating crew. With respect to command and control, the resident inspectors focused on actions taken by the control room supervision in managing the operating crew's response to the event.

b. Observations and Findings

No findings were identified.

The team identified one unresolved item for which additional information is required to determine if performance deficiencies exist or if the issue constitutes a violation of NRC requirements.

On January 31, 2012, at 3:05 p.m. (PST), main control room operators at Unit 3 received a secondary plant system radiation alarm associated with the air ejectors followed by a blowdown radiation monitor alarm. Operations personnel responded in accordance with Abnormal Operating Instruction SO23-13-14, "Reactor Coolant Leak," Revision 16, since

the entry conditions for a steam generator tube leak were satisfied. Operations personnel determined the leakage to be about 75 gallons per day, using a mass balance calculation (.06 gpm), from steam generator 3E0-88. This leak rate was below the Technical Specification 3.4.13, "RCS Operational Leakage," limit of 150 gallons per day for primary- to-secondary leakage through any one steam generator.

At 4:10 p.m., operations personnel evaluated that the primary-to-secondary leak rate exceeded 75 gallons per day on steam generator 3E0-88 and that the leak was increasing at greater than 30 gallons per day per hour, and consequently, initiated a rapid power reduction to be ≤ 50 percent power in one hour and in Mode 3 within the next two hours per Abnormal Operating Instruction SO23-13-14. In accordance with Abnormal Operating Instruction SO23-13-14, when reactor power was less than 35 percent, operations personnel tripped the reactor at 5:31 p.m. to enter Mode 3.

Due to the manual reactor trip, operations personnel entered Emergency Operating Instruction SO23-12-1, "Standard Post Trip Actions," Revision 26, to ensure the plant was placed in a stable, safe condition, and that the plant was configured to respond to the continuing steam generator tube leak event. Operations personnel implemented the emergency operating instructions and isolated the affected steam generator at 6:00 p.m. A plant cooldown was conducted by using main steam bypass from steam generator 3E0-89 to the main condenser. Mode 4 conditions were achieved at approximately 6 hours after isolation of the steam generator. Cooldown continued until Unit 3 was in Mode 5, cold shutdown.

The resident inspectors concluded that abnormal and emergency operating instructions were performed consistent with expected standards and that operations personnel exhibited the fundamental operator competencies in response to the Unit 3 steam generator tube leak event.

Specifically, the resident inspectors determined that the operating crew displayed a questioning attitude of changing plant parameters and took conservative actions. The operating crew identified important preliminary increasing trends of Unit 3 air ejectors radiation monitors and subsequent alarms in a timely manner for a tube leak in steam generator 3E0-88. Additionally, the resident inspectors determined that crew supervision exercised effective oversight of plant status, crew performance, and control room command and control.

(1) Introduction: The team identified an unresolved item associated with Operations Procedure SO123-0-A8, "Trip/Transient and Event Review," that required a formal review of operator actions and safety systems to determine if important systems responded as design. The formal review was not completed.

Description: On March 19, 2012, the team requested to review the results of operations post trip/transient evaluation of the January 31, Unit 3 tube leak event. Operations Procedure SO123-0-A8, "Trip/Transient and Event Review," Revision 8, required a detailed post trip review following unplanned reactor trips. However, a formal trip/transient and event review was not available because operations personnel determined the Unit 3 event was planned and therefore a formal review was not required.

On March 27, 2012, Team met with operations personnel to discuss items on a draft Unit 3 trip/transient evaluation provided to the team. The team also discussed with operations personnel the requirements in Operations Procedure SO123-0-A8, and concluded a basis for what was "planned" and "unplanned" was not defined. Operations personnel determined the Unit 3 reactor trip was a planned reactor trip because Abnormal Operating Instruction SO23-13-14, "Reactor Coolant Leak," Revision 16, Section 4, had described actions for primary-to-secondary leakage. Specifically, this section stated, in part, under plant conditions of increasing steam generator tube leakage, operations personnel were required to perform a rapid power reduction to less than 35 percent power, then trip the reactor.

The team discussed with operations personnel that definitions for unplanned events have been established through industry standards to report on plant performance. These standards include NEI 99-02, "Regulatory Assessment Performance Indicator Guideline," Revision 6. Industry Guidance NEI 99-02 indicated that Unit 3 reactor trip should be considered unplanned since the reactor trip was required by an abnormal operating instruction and would count against the performance indicator for unplanned reactor trips. NRC Regulatory Issue Summary (RIS) 2000-08, "Voluntary Submission of Performance Indicator Data," Revision 1, allows industry to use NEI 99-02 to report performance indicator data.

Additional review and follow up will be required to review the corrective actions associated with the procedural guidance for an event review and then determine whether this issue represents a performance deficiency or constitutes a violation of NRC requirements. This issue is identified as URI 05000362/2012007-01, "Adequacy of the Trip/Transient and Event Review Procedure"

1.4 Description of Steam Generator Inspections at SONGS Unit 2

On January 10, 2012, SONGS Unit 2 was shutdown for a refueling outage. Southern California Edison personnel conducted a scheduled steam generator inspection in accordance with Technical Specification 6.6.9, "Steam Generator (SG) Program. This was the first inspection of the Unit 2 steam generators since their replacement in January 2010. The accumulated operating time on the replacement Unit 2 steam generators was 1.7 effective full power years. There was no reported primary to secondary leakage at the time of shutdown.

The scope of the inspection included a 100 percent tube sample with an eddy current test bobbin probe over the full tube length, followup rotating coil inspections at special interest locations, and a secondary side foreign object search and retrieval. Three types of flaw indications were found in the tubes:

- Wear at the tube support plate and anti-vibration bar supports
- Wear caused by a loose part
- Wear at retainer bars

With the exception of the wear indications found at tube retainer bar locations, the wear indications found are similar to those found at other replacement steam generators after one cycle of operation. A total of 2411 tubes were found with indications at the tube support plates and anti-vibration bar supports, the vast majority of which had a measured depth of less than 20 percent of the tube wall thickness. Only two of these indications, located at the anti-vibration bar supports, exceeded the Technical Specification 6.6.9.c repair limit of 35 percent of the tube wall thickness. The two affected tubes plus two additional tubes with 31 percent deep indications were stabilized and plugged.

Southern California Edison performed a reanalysis of the bobbin probe eddy current data collected during the Unit 2 inspection program. This reanalysis was performed after the finding of the long free-span indications in Unit 3, allowing insights gained during the Unit 3 inspections to be applied to the Unit 2 data. The scope of this reanalysis was a "box" of 1000 tubes in each Unit 2 steam generator which bounded the region of tubing affected by the instability damage in Unit 3. This reanalysis confirmed the results of the original analysis and did not identify any tube-to-tube wear.

Two tubes were found with indications (less than 35 percent through wall) caused by a small loose part on the secondary side. This loose part was removed from the steam generator. Metallurgical analysis indicated the loose part was a piece of weld metal, most likely introduced during steam generator manufacturing operations. The two affected tubes were left in service.

Six tubes were found with indications at retainer bar intersections. The retainer bars are part of the support structure for the anti-vibration bars and are a unique feature of steam generators manufactured Mitsubishi. The measured indication depths ranged from 28 to 90 percent of the tube wall thickness. Because of the short measured lengths of these flaws, only the 90 percent indication was in-situ pressure tested as part of condition monitoring. The affected tube was successfully pressurized to 5300 psi with no leakage, confirming that the Technical Specification 6.6.9.b tube integrity performance criteria were met. Mitsubishi attributed the cause of these indications to retainer bar vibration, the potential for which had not been evaluated during design. Fort Calhoun is the only other domestic plant with Mitsubishi steam generators. The retainer bars at Fort Calhoun are significantly stiffer than at SONGS.

The six tubes with retainer bar indications have been plugged and stabilized. In addition, the remaining 182 tubes (total for both Unit 2 steam generators) that intersect the retainer bars were plugged as a preventive measure. Twenty four of these tubes were stabilized prior to plugging to ensure that all 188 plugged tubes will not sever due to continued vibration of the retainer bar. The tubes that were stabilized are strategically located at each end and center of the retainer bars.

Detailed plans for returning Unit 2 to service were still under development. Short-term plans relating to Unit 2 included conducting a full u-bend examination of 1375 tubes in both steam generators using a rotating coil. The tube sample was intended to totally box-in the region affected by free-span wear seen in Unit 3 by significant margin. The rotating coil provides a slightly more sensitive inspection for long free-span wear scars than the bobbin probe. These inspections were performed subsequent to the team's site

visit and identified two tubes in Unit 2 steam generator 2E0-89 with shallow free-span wear in the u-bend region. These indications both measured approximately 14 percent deep, and were located in the same region of the bundle affected by free-span indications in the Unit 3 steam generators.

The tube wear data for Unit 2 is shown below.

**Wear Depths Summary**

| Steam Generator SG2E88 | Anti-Vibration Bar | Tube Support Plate | U-Bend Freespan | Retainer Bar | Foreign Object | Total |
|---|---|---|---|---|---|---|
| TW ≥ 50% | 0 | 0 | 0 | 1 | 0 | 1 |
| 35 - 49% | 2 | 0 | 0 | 1 | 0 | 3 |
| 20 - 34% | 86 | 0 | 0 | 0 | 2 | 88 |
| 10 - 19% | 705 | 108 | 0 | 0 | 0 | 813 |
| TW < 10% | 964 | 117 | 0 | 0 | 0 | 1081 |
| TOTAL | 1757 | 225 | 0 | 2 | 2 | **1986** |

| Steam Generator SG2E89 | Anti-Vibration Bar | Tube Support Plate | U-Bend Freespan | Retainer Bar | Foreign Object | Total |
|---|---|---|---|---|---|---|
| TW ≥ 50% | 0 | 0 | 0 | 1 | 0 | 1 |
| 35 - 49% | 0 | 0 | 0 | 1 | 0 | 1 |
| 20 - 34% | 78 | 1 | 0 | 3 | 0 | 82 |
| 10 - 19% | 1014 | 85 | 2 | 0 | 0 | 1101 |
| TW < 10% | 1499 | 53 | 0 | 0 | 0 | 1552 |
| TOTAL | 2591 | 139 | 2 | 5 | 0 | **2737** |

1.5 Description of Steam Generator Inspections at SONGS Unit 3

After shutdown, the licensee started preparations for performing inspections of Unit 3 steam generators 3E0-89 and 3E0-88. The steam generator tube inspections commenced on February 12, 2012, and confirmed the location of the leak in steam generator 3E0-88 as coming from the tube in Row 106 Column 78. The leak was located 2 inches beyond anti-vibration support number 4 on the hot leg side. It was found to be associated with a long (approximately 30 inches) free-span flaw indication. No other tubes were found to be leaking.

The licensee then performed eddy current inspections of 100 percent of the tubes, full length, in both Unit 3 steam generators with a bobbin probe. The bobbin probe examinations were supplemented by rotating coil examinations to confirm, characterize, and size the indications found by the bobbin probe. These examinations identified over 160 tubes in each steam generator with long free-span indications similar to that found on the leaking tube. In each steam generator, the tubes containing the free-span

indications were grouped together in a tightly packed zone near the center of the tube bundle. The free-span indications were located on the upper and/or lower sides (i.e., the extrados and intrados) of the u-bend. Thus, a given free-span indication on the extrados of one tube tended to be matched by a similar indication on the intrados of the adjacent higher row tube located in the same tube column. This pattern provided early evidence to SCE personnel that the free-span indications were wear flaws due to tube-to-tube contact from motion of the u-bends within the plane of the u-bends. More than half of the free-span indications in each steam generator had maximum measured depths exceeding the 35 percent plugging limit in the technical specifications, and ranged to as much as 99 percent (for the non-leaking tubes).

Over 460 tubes in each steam generator were found with wear indications at the tube support plates. In general, tubes exhibiting the free-span wear indications tended to exhibit tube support plate indications with the highest depth measurements, typically with the deepest values at the seventh tube support plate and trending down at successively lower support levels. Approximately 170 tubes in each SG exhibited indications at the tube support plates that exceeded the 35 percent plugging limit, with maximum depths ranging to 70 percent.

Approximately 800 tubes in steam generator 3E0-88 and 900 tubes in steam generator 3E0-89 exhibited wear indications at the anti-vibration bar supports. Most of these measured less than 20 percent deep, and only 2 indications exceeded the 35 percent plugging limit. For tube indications at anti-vibration bars in tubes not exhibiting free-span u-bend indications, the length of the wear indications was confined to within the width of the anti-vibration bars. This was also true in SONGS Unit 2. For tubes that exhibited free-span indications, many of these tubes had wear indications at the anti-vibration bars that extended outside the width of the anti-vibration bars which indicated in-plane movement of these tubes in the u-bend area.

Four tubes were found with indications at retainer bar intersections, with measured depths ranging from 28 to 46 percent. At the time of the team's presence at the site, planned corrective actions with respect to tubes adjacent to the retainer bar were similar to those completed for Unit 2. The four tubes with retainer bar indications were plugged and stabilized. In addition, the remaining 184 tubes (total for both Unit 3 steam generators) that intersect the retainer bars were plugged as a preventive measure. Twenty four of these tubes were stabilized prior. The tubes that were stabilized are strategically located at each end and center of the retainer bars.

Tube wear data for Unit 3 is shown below.

**Wear Depths Summary**

| Steam Generator SG3E88 | Anti-Vibration Bar | Tube Support Plate | Tube-to-Tube Wear | Retainer Bar | Foreign Object | Total |
|---|---|---|---|---|---|---|
| TW ≥ 50% | 0 | 117 | 48 | 0 | 0 | 165 |
| 35 - 49% | 3 | 217 | 116 | 2 | 0 | 338 |

| | | | | | | |
|---|---|---|---|---|---|---|
| 20 - 34% | 156 | 506 | 134 | 1 | 0 | 797 |
| 10 - 19% | 1380 | 542 | 98 | 0 | 0 | 2020 |
| TW < 10% | 1818 | 55 | 11 | 0 | 0 | 1884 |
| TOTAL | 3357 | 1437 | 407 | 3 | 0 | **5204** |

| Steam Generator SG3E89 | Anti-Vibration Bar | Tube Support Plate | Tube-to-Tube Wear | Retainer Bar | Foreign Object | Total |
|---|---|---|---|---|---|---|
| TW ≥ 50% | 0 | 91 | 26 | 0 | 0 | 117 |
| 35 - 49% | 0 | 252 | 102 | 1 | 0 | 355 |
| 20 - 34% | 45 | 487 | 215 | 0 | 0 | 747 |
| 10 - 19% | 940 | 590 | 72 | 0 | 0 | 1602 |
| TW < 10% | 2164 | 94 | 1 | 0 | 0 | 2259 |
| TOTAL | 3149 | 1514 | 416 | 1 | 0 | **5080** |

Detailed plans for satisfying the provisions of the NRC March 27, 2012, Confirmatory Action Letter for SONGS Unit 3 were not available and were still being developed.

1.6 In-Situ Pressure Testing

Technical Specification 5.5.9.a for SONGS Units 2 and 3 requires that a condition monitoring assessment be performed during each outage that the steam generator tubes are inspected or plugged to confirm that the tube integrity performance are being met. These performance criteria include criteria for structural integrity and accident leakage integrity. The limiting structural criterion applicable to the SONGS Units 2 and 3 is the normal steady state pressure differential across the tubes times a safety factor of three. The limiting accident leakage criterion is 0.5 gallons per minute under main steam line break conditions.

Typically, the requirement for performing condition monitoring is satisfied by analyzing eddy current flaw indications relative to screening criteria that are functions of measured flaw depth, length, and/or eddy current voltage response. These screening criteria are conservative relative to the performance criteria since they make allowance for eddy current measurement error, uncertainties with respect to voltage correlations with flaw depth and burst strength, and material property variability. When these screening criteria are exceeded, in-situ pressure tests may be performed for tubes not meeting the screening criteria to confirm that the performance criteria are met for these tubes. In-situ pressure test procedures at SONGS and the screening criteria for selecting tubes to be tested were in accordance with Electrical Power Research Institute Report 1014983, "Steam Generator In-Situ Pressure Test Guidelines," Revision 3.

At Unit 2, one tube with a measured 90 percent deep indication at a retainer bar location was determined to be outside the screening criteria and was in-situ pressure tested. For Unit 3, an optional strategy to the screening criteria approach was taken in accordance with the Steam Generator In-Situ Pressure Test Guidelines, Appendix A. The Appendix A approach is a statistically based Monte Carlo approach that samples the

uncertainty distributions associated with each of the input parameters for calculating tube burst pressure. This methodology selects all tubes determined to have a 0.95 probability or less of meeting the limiting structural integrity performance criterion. Application of this methodology led to selection of 129 tubes on Unit 3 for in-situ pressure testing, 73 tubes in steam generator 3E0-88 and 56 tubes in steam generator 3E0-89.

The in-situ pressure tests were performed under ambient conditions. Therefore the test pressures were adjusted upward from actual values under hot conditions to account for the increased yield and ultimate strength of the tube material under ambient conditions. The test pressures (with correction factors added) corresponding to normal operating conditions, main steam line break, and three times normal operating pressure differential were 1850 psi, 3200 psi, and 5300 psi, respectively.

The test procedure involved pressurizing the subject tube at a rate not to exceed 200 psi/sec to each test point. At each test point, pressure was held constant for two minutes if the tube was not leaking. If the tube was leaking, pressure was held constant for five minutes before ramping to the next test pressure.

The tube with a 90 percent deep retainer bar indication in Unit 2 was successfully tested to 5300 psi with no leakage. This demonstrated that all performance criteria were met for this tube. For Unit 3, 136 of the 144 tubes were successfully tested to 5300 psi with no leakage, demonstrating that these tubes met the performance criteria. The remaining eight tubes "failed" prior to reaching 5300 psi. Failure in this context means that leakage occurred in excess of the 4.5 gallons per minute pump capacity during the test, and test pressure could not be maintained. All eight tubes that failed were in steam generator 3E0-88. All tubes tested in steam generator 3E0-89 passed with no leakage.

Table 1 summarizes the in-situ pressure test results for the eight tubes that failed the test. Three of the eight tubes failed at or below the test pressure corresponding to main steam line break differential pressure. The tube that leaked causing shutdown of SONGS Unit 3 (row 106, column 78) exhibited the lowest failure pressure, 2874 psi. The three tubes that failed at or below main steam line break pressure failed to meet the accident leakage performance criteria as well as the structural integrity performance criteria. The other five tubes met the accident leakage criteria, but failed to meet the structural criteria.

Prior to being tested to failure, the tube that leaked during operation (row 106, column 78) exhibited a measured leak rate of 0.072 gallons per minute at a test pressure corresponding to normal operating conditions. This compares with a leak rate of 0.06 gallons per minute measured by SCE operating staff for SONGS Unit 3 when they made the decision to shut the plant down. The reported operational leakage was evaluated based on ambient conditions. Both the operational and test measurements are less than the applicable technical specification limit of 0.1 gallons per minute.

Table 1 – SONGS 3 In-Situ Pressure Test Results

| SG | Row | Column | Leak Rate at Normal Operating Conditions (gpm) | Leak Rate at Main Steam Line Break (gpm) | Failure Pressure (psi) |
|---|---|---|---|---|---|
| 88 | 106 | 78 | 0.072 | >0.5 | 2874 |
| 88 | 102 | 78 | 0 | >0.5 | 3268 |
| 88 | 104 | 78 | 0 | >0.5 | 3180 |
| 88 | 100 | 80 | 0 | >0.5 | 4732 |
| 88 | 107 | 87 | 0 | >0.5 | 5160 |
| 88 | 101 | 81 | 0 | >0.5 | 4889 |
| 88 | 98 | 80 | 0 | >0.5 | 4886 |
| 88 | 99 | 81 | 0 | >0.5 | 5026 |

2.0 Probable Cause Evaluation (Charter Item 2)

While the team was on-site, both SCE and Mitsubishi were in the process of conducting cause evaluations for the tube failure and unexpected wear of steam generator tubes in Unit 3. As part of both evaluations, actions were being taken to understand the differences between Unit 2 and 3 steam generators. The cause evaluations were not complete and were undergoing changes while the Augmented Inspection Team was onsite; however, SCE did subsequently complete their cause evaluation prior to the team's exit meeting. The team did a detailed review of the completed cause evaluation.

2.1 SONGS Cause Evaluation

a. Inspection Scope

The team conducted an overall and independent review of SCE's actions taken to understand the probable cause for the steam generator tube degradation. The team reviewed the updated final safety analysis report updated final safety analysis report, technical specifications, design basis documents, original steam generator design, replacement steam generator design, purchase order specifications, design changes, manufacturing changes, nonconformance reports, supplier deviation reports, and interviewed personnel. The review included understanding the licensee's criteria for determining the cause, or if one could not be determined, the most probable cause. .

b. Observations and Findings

No findings were identified.

The team participated in discussions with the licensee's cause analysis team and noted that the licensee employed various root cause evaluation techniques. These included a change analysis technique that compared design differences and a problem analysis technique relying on a systematic process that looked at the causal effects and risk assessments of possible causes. The team reviewed the licensee causal analysis summary that assigned a ranking of highly probable to unlikely.

In the area of thermal hydraulic analysis the licensee contracted AREVA to verify the accuracy of Mitsubishi's thermal-hydraulic code (FIT III) used during the design of the replacement steam generators, by comparing it to ATHOS, a thermal-hydraulic code developed by the Electric Power Research Institute (EPRI). In addition, SCE contracted Westinghouse to perform a completely independent analysis using a Westinghouse modified ATHOS thermal-hydraulic code. AREVA also performed independent flow induced vibration analyses. The licensee brought on board MPR associates and numerous other technical experts, including a world renowned expert in flow induced vibration, to assist in the cause assessment. The team observed that SCE preliminary causal analysis was generally consistent with that of Mitsubishi. Initially, the licensee reviewed the following cause contributors:

- Departure from original steam generator u-bend/anti-vibration bar configuration - highly probable
- Departure from original steam generator stay cylinder configuration - possible
- Departure from original steam generator tube support plate configuration - possible
- Replacement steam generator anti-vibration bar structure too flexible - possible
- Additional 300 rotations of Unit 3 replacement steam generator due to divider plate repair work - possible
- Thermal-hydraulic and flow induced vibration models used in replacement steam generator design incorrectly predicted replacement steam generator tube bundle behavior – possible

The team observed that the licensee performed a detailed analysis and attempted to address all probable causes. The team observed that some of the conditions which were eliminated as potential contributors may need further evaluation. In particular, the team believed that the only major difference between Units 2 and 3 was the divider plate repair to both Unit 3 steam generators. This difference had been discounted by both SCE and Mitsubishi. The divider plate is further discussed in Section 12.0 of this report.

The completed SCE cause evaluation identified the mechanistic cause of the tube-to-tube wear as fluid-elastic instability caused by a combination of localized high steam/water velocity, high steam void fraction, and insufficient contact forces between the anti-vibration bars and the tubes. The Mitsubishi thermal/hydraulic model under-predicted the actual thermal/hydraulic conditions in the steam generator and improvements in fabrication between Unit 2 and Unit 3 steam generators led to the reduced contact forces.

## 2.2 Mitsubishi Cause Evaluation

a. Inspection Scope

The team conducted an overall and independent review of Mitsubishi's actions taken to understand the probable cause of the steam generator tube degradation. While onsite, the inspection team was informed that Mitsubishi was performing a failure analysis to characterize the mechanism causing the tube-to-tube wear condition in Unit 3. The team had periodic discussions with Mitsubishi personnel to gather information on the probable causes under consideration. The team reviewed information contained in the updated final safety analysis report, technical specifications, design basis documents, purchase order specifications, design changes, design drawings, manufacturing changes, nonconformance reports, and supplier deviation reports to understand the design and fabrication of the replacement steam generators and independently assess the information obtained from Mitsubishi's in-progress cause evaluation.

b. Observations and Findings

No findings were identified.

The team determined that Mitsubishi was performing a thorough evaluation of the failure mechanism leading to the tube-to-tube wear in Unit 3. The team noted that Mitsubishi gathered factual information about the design, fabrication, and operation of the replacement steam generators in Unit 2 and Unit 3 to understand the differences between these components and identify potential contributing causes. The team discussed the preliminary failure mechanism theory with Mitsubishi personnel, who attributed the tube-to-tube, wear to a combination of design, fabrication, and operational factors.

Mitsubishi's preliminary explanation of the failure mechanism started with the combination of two factors: (1) a relatively small tube pitch to tube diameter ratio (P/D), and (2) high void fraction in the tube bundle area where the tube-to-tube wear was identified. The small pitch to diameter ratio was a fixed parameter in the replacement steam generators established by the nominal center-to-center distance between adjacent tubes (P) and the nominal outside diameter of the tubes (D). The high void fraction was identified from the results of Mitsubishi's thermal-hydraulic model for the secondary side of the replacement steam generators. Mitsubishi considered that the combination of these two factors may have resulted in favorable conditions for in-plane tube vibration based, in part, on the results of recent studies in fluid-elastic instability.

Additionally, Mitsubishi identified that the Unit 3 replacement steam generators had better dimensional controls during the fabrication process. This determination was based, in part, on the results of pre-service and in-service eddy current examinations, and fabrication data from Unit 2 and Unit 3 replacement steam generators. The correlation of dimensional controls with the failure mechanism was that improved dimensional controls for Unit 3 replacement steam generators resulted in less variability of as-built critical dimensions such as anti-vibration bar thickness, tube roundness, and gaps between tubes and anti-vibration bars. Condition Report 201836127 Cause Evaluation, Revision 0, lists one of the mechanistic causes of the tube-to-tube wear to be associated with the reduction in dimensional variability that resulted in less contact force between the tubes and the anti-vibration bars.

The failure mechanism model also considered a fluid dynamic effect associated with the spreading of the tubes in the U-bend region during normal operating conditions. This effect was informally referred to as "flowering," due to the characteristic shape in which the tube bundle spreads transverse to the plane of the u-bends at normal operating conditions. "Flowering" was described as the elastic deformation of the anti-vibration bar structure and the tube bundle in the U-bend region, as a result of thermal expansion and fluid dynamic pressure acting on the secondary side of the tubes (see figure below). The deformation caused by the "flowering" effect was believed to result in multiple areas of no contact between the anti-vibration bars and the tubes, which minimized resistance to in-plane motion of the u-bend area of the tubes.

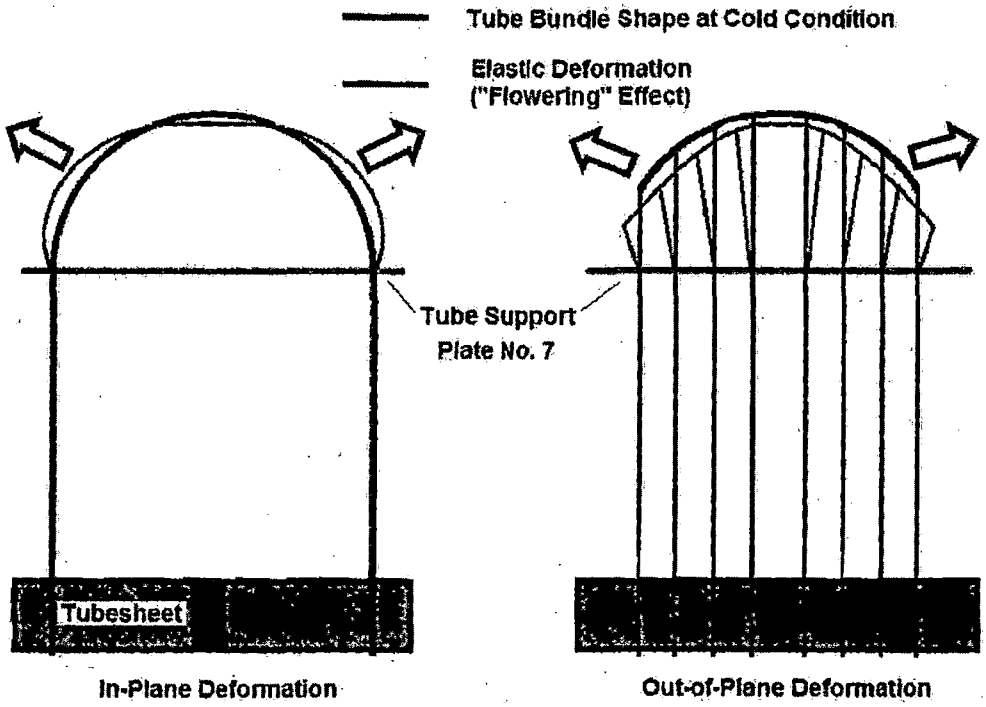


Description of "Flowering" Effect (Conceptual Drawing – For Illustration Purposes Only)

Mitsubishi considered that the collective contribution of the factors described above resulted in conditions in the U-bend that were highly susceptible to excessive tube vibration. The in-plane vibration of the tubes in the U-bend region allowed direct contact between free-span sections of the tubes, resulting in the unanticipated tube-to-tube wear.

At the conclusion of the onsite portion of this inspection, Mitsubishi was further evaluating the failure mechanism by conducting in-depth analyses of available data to validate their failure mechanism theory. One of the analyses included analytical studies of the impact of anti-vibration bar gap size, free-span length, fluid-elastic vibration, and contact forces on tube wear depth. An expected outcome of this analysis was that contact forces and the number of inactive supports should be the biggest contributors to wear under fluid-elastic instability conditions. Additionally, Mitsubishi was conducting

further analytical studies of the "flowering" effect by modeling multiple cases of elastic displacement of the tube bundle structure, taking into consideration thermal expansion and dynamic pressures. Concurrent with these analyses, Mitsubishi was studying the effect of manufacturing dispersion on tube wear. Specifically, Mitsubishi was modeling multiple cases of manufacturing variability to study the influence of different dimensional controls on gap and contact forces. Mitsubishi was using as-built data as well as manufacturing tolerances to statistically assess the impact of dimensional controls on the resulting gaps and contact forces in different areas of the tube bundle. One of the expected outcomes of this analysis was that manufacturing variability in Unit 3, in combination with the "flowering" effect, would result in a reduction of contact forces in Unit 3 relative to those in Unit 2. During the on-site portion of this inspection, the results of these studies were not finalized and additional failure analysis tasks were scheduled to accurately characterize the failure mechanism and support the cause determination.

At the time of the exit, Mitsubishi was still completing their independent cause analysis. As part of the Confirmatory Action Letter inspection, the final Mitsubishi cause evaluation will be reviewed.

3.0 Operational Differences in Configuration and Operation between Unit 2 and 3 (Charter item 3)

a. Inspection Scope

The team reviewed Unit 2 and 3 Cycle 16 operational data records found in operator logs and the plant computer system. The team focused on differences in configuration and operation between Units 2 and 3. The team evaluated full power operational data between Unit 2 and Unit 3 steam generators after each were replaced. From this data the team compared key plant parameters and other indications such as temperature, flow, power, pressure, and vibration and loose parts monitoring alarms. The team reviewed operational differences between Units 2 and 3 in order to gain information and to assess if these differences could have had an impact on the observed differences in the steam generator tube wear between the units.

b. Observations and Findings

No findings were identified.

The team looked at a number of operational differences from the perspective of the thermal-hydraulic disparities. The team also evaluated the significance of these differences insofar as potential impact to tube degradation. It was noted that Unit 3 ran with slightly higher primary temperatures, about 4°F higher than Unit 2. Other differences were noted in steam and feedwater flow but none of the differences were considered sufficient to significantly affect thermal hydraulic characteristics inside the steam generators. In addition, the team also identified that Unit 3 steam generators had numerous valid vibration and loose parts monitoring system alarms compared to Unit 2 steam generators.

(1) Introduction: The team identified an unresolved item associated with the number of valid vibration and loose parts alarms observed in Unit 3 steam generators compared to Unit 2 steam generators, during steady state conditions.

Description: During the review of operational differences between Unit 2 and 3 steam generators the team identified a significant difference in number of valid vibration and loose parts monitoring system alarms. The vibration and loose parts monitoring system was designed to provide continuous monitoring and conditioning of loose parts accelerometer signals. Two separate accelerometers were installed on each of the steam generators. The location of these instruments are on the steam generators' lower supporting structures and provide acoustic information about loose parts impacts specifically on the reactor coolant or primary side of the steam generators. The vibration and loose parts monitoring system real time functions consist mainly of impact alarm validation of suspected loose part events and recording acoustic data. Long term vibration monitoring and loose part event trending were done by engineering personnel using recorded data.

Unit 3 returned to service in February 2011, and the resident inspectors noted a number of nuclear notifications associated with Unit 3 steam generators vibration and loose parts monitoring alarms. On January 20, 2012, prior to the Unit 3 tube leak, engineering personnel also identified this trend and documented in Nuclear Notification NN 201818719 this problem and assigned an action to do further evaluation. On February 3, 2012, engineering personnel sent two sets of alarm signatures to Westinghouse, which contained impact data on alarms for time periods of steady state operation (i.e., no major temperature changes). Westinghouse engineering personnel concluded that the acoustic signals picked up by the accelerometers were valid and similar in nature to acoustic signatures caused by thermal movement of a steam generator expected during changes in thermal conditions, such as plant startup or shutdown. However the data obtained and analyzed had been taken during steady state operations. The team noted that Unit 2 steam generators did not receive the same number and type of alarms during a similar period of steady state operations. Engineering personnel also compared hot leg temperature changes linked to Unit 3 operations from February 18, 2011, to January 31, 2012, and confirmed about 30 valid alarms during this period were not associated with thermal transients.

Additional review and follow up will be required of the vibration and loose parts monitoring system alarms, including evaluation and disposition of Unit 3 alarms and then determine whether this issue represents a performance deficiency or constitutes a violation of NRC requirements. This issue is identified as URI 05000362/2012007-02, "Evaluation of Unit 3 Vibration and Loose Parts Monitoring System Alarms."

(2) Introduction: The team performed a number of different thermal-hydraulic analysis of Units 2 and 3 steam generators. The output of the various analyses runs where then compared and reviewed to determine if those differences could have contributed to the significant change in steam generator tube wear.

Description: The NRC conducted a number of different thermal-hydraulic analyses, including:

- Lower bounding thermal hydraulic analysis using the steam generator base design condition, where primary inlet temperature was 598°F, and an upper bound case where primary inlet temperature was 611°F as identified in Mitsubishi Document L5-04GA021, Revision 3
- Varying steam generator pressures from 833 to 942 psia
- Steam mass flow rates from 7.59 to 7.62 Mlbm/hr
- Primary loop volumetric flow rate from 102,000 to 104,000 gpm, and
- Recirculation ratio from 3.2 to 3.5.

The result of the independent NRC thermal-hydraulic analysis concluded that differences in the actual operation between units and/or individual steam generators had an insignificant impact on the results and in fact, the team did not identify any changes in steam velocities or void fractions that could attribute to the differences in tube wear between the units or steam generators. It should be noted that increases in primary temperature and steam generator pressures has the effect of reducing void fractions and peak steam velocities, which slightly decreases the conditions necessary for fluid elastic instability and fluid-induced vibration.

4.0 Design and Manufacturing Differences (Charter Item #4) (Mitsubishi Charter Item 1)

During the development of the charter, it was not known how SCE and Mitsubishi reviewed and approved design and manufacturing changes. During the inspection, it was identified that all design and manufacturing changes proposed by Mitsubishi required review and approval from a SCE representative. Based on this, it was determined that this area could be covered as one item.

a. Inspection Scope

The team interviewed licensee and Mitsubishi personnel involved in the design and fabrication of the replacement steam generators and reviewed information including nonconformance reports, design drawings, fabrication procedures, design changes, engineering evaluations, supplier deviation requests, and design specifications to identify conditions affecting quality that resulted in relevant design differences between the replacement steam generators. The team assessed whether these differences could be considered as contributing factors for the cause of the tube-to-tube wear issue in Unit 3. The team also reviewed Engineering Change Packages 800071702 and 800071703 for the Unit 2 and Unit 3 replacement steam generators, respectively, with emphasis on changes made to the design methodology described in the updated final safety analysis report for the original steam generators to verify that the evaluation was performed in accordance with licensee procedures and the provisions of 10CFR 50.59, "Changes, Tests, and Experiments."

b. Observations and Findings

No findings were identified.

The team identified two unresolved items for which additional information is required to determine if performance deficiencies exist or if the issues constitute violations of NRC requirements. The team also identified several observations related to the design, fabrication, and the engineering change package for the Unit 2 and Unit 3 replacement steam generators.

1) Introduction: The team identified an unresolved item associated with the design of the retainer bars in Unit 2 and Unit 3 replacement steam generators.

   Description: In February 2012, the licensee identified wear indications in Unit 2 replacement steam generators at the tube locations in contact with the retainer bars (see figure below). Some of the indications showed excessive wear with a maximum degradation of 90 percent through wall.

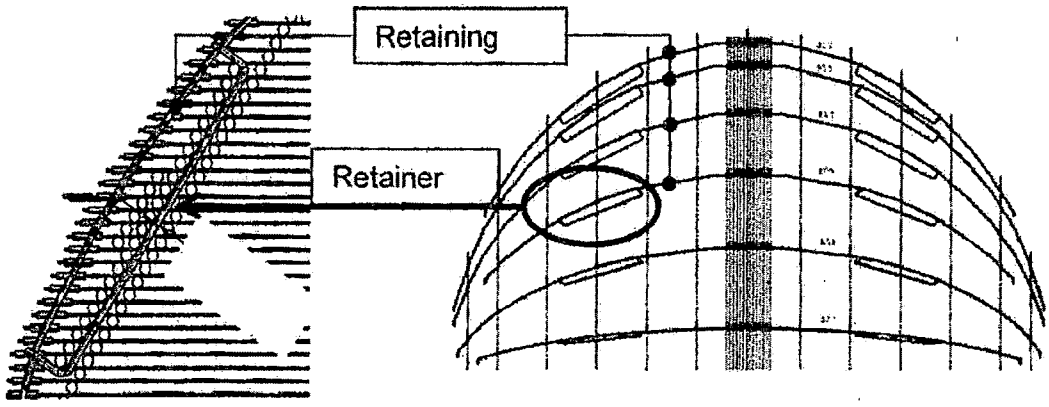


**Retainer Bar Design and Location of Affected Tubes (For Illustration Purposes Only)**

The team identified that the design of the replacement steam generators did not expect any potential vibration concerns in the area of the tube bundle where the retainer bars were located. The basis for Mitsubishi's design philosophy relied on the following factors:

- Based on the calculated natural frequency of the retainer bar, Mitsubishi considered that there would not be a resonant vibration condition relative to the flow conditions in the location of retainer bars.
- The vibration analysis of the tube bundle only considered out-of-plane vibration because in-plane vibration was not expected to be an operational concern for the retainer bars.
- The outermost tubes were considered the least susceptible to flow-elastic instability; therefore retainer bar locations were not included in the vibration analysis.
- Fluid-elastic instability was found not applicable to the retainer bar because this mechanism did not apply to a single tube in cross flow.

- Vortex-induced vibration was found not applicable to the retainer bar because it was considered a vibration mode applicable to a single cylinder in uniform cross flow in a large area and the flow condition around the retainer bars was considered slug-froth two phase flow.

However, upon identification of retainer bar-to-tube wear in Unit 2 replacement steam generators, Mitsubishi performed an evaluation to identify the cause of excessive wear. The analysis considered three vibration mechanisms: fluid-elastic instability, vortex-induced vibration, and turbulence-induced vibration (random vibration). The analysis for turbulence-induced vibration determined that random vibration was the possible cause of the retainer vibration, based on the peculiar flow around the retainer bar, combined with the rather low natural frequency of the retainer bar. The analysis used the two phase flow conditions around the retainer bars and identified various modes of vibration at those flow conditions that could lead to retainer bar vibration and consequently to tube wear.

Additional review by the NRC is required following completion of the licensee's cause evaluation to determine whether this issue represents a performance deficiency or constitutes a violation of NRC requirements. This issue is identified as URI 05000362/2012007-03, "Evaluation of Retainer Bars Vibration during the Original Design of the Replacement Steam Generators."

2) Introduction: The team identified an unresolved item associated with the dimensional controls of critical dimensions throughout the fabrication of Unit 2 and Unit 3 replacement steam generators.

Description: Based on the information gathered by the team on the differences in dimensional controls of critical parameters in Unit 2 and Unit 3 replacement steam generators, the team determined that Mitsubishi did not consider the potential impact of improving dimensional controls for tube roundness and anti-vibration bars on the final tube bundle clearances at normal operating conditions.

Additional review by the NRC is required following completion of the licensee's cause evaluation to fully assess how the dimensional controls contributed to the tube-to-tube wear in Unit 3 and then determine whether this issue represents a performance deficiency or constitutes a violation of NRC requirements. This issue is identified as URI 05000362/2012007-04, "Evaluation of Changes in Dimensional Controls during the Fabrication of Unit 2 and Unit 3 Replacement Steam Generators."

3) Design Differences: The team did not identify any significant differences in the design requirements of Unit 2 and Unit 3 replacement steam generators. The "Conformed Specification for Design and Fabrication of the Replacement Steam Generators," also known as the design specification, contained identical technical requirements for Unit 2 and Unit 3 steam generators. All replacement steam generators were required to be designed, fabricated, and tested in accordance with the 20?? edition of the American Society of Mechanical Engineers (ASME) Boiler and Pressure Vessel Code, industry standards, and NRC endorsed methods described in applicable regulatory guides. The licensee specified the same licensing requirements for all replacement steam generators.

The design specification also contained provisions to address technical or quality deviations from the requirements of the purchase order or the design specifications, including the disposition of "Repair" or "Accept as-is" conditions captured as non-conformance reports in Mitsubishi's quality assurance program and changes to documents previously approved by the licensee. This process was referred to as "Supplier Deviation Request" and allowed the licensee to review and approve deviations from the approved design specifications. The team noted that changes affecting the specified design were submitted to SCE personnel for review and approval.

The team noted that the design specification established identical provisions for the design of the replacement steam generator components including the vessel, upper/lower shell, transition cone, tubesheet, channel head, divider plate, tube supports, tubing, steam nozzle, feedwater nozzle, primary nozzles, steam flow limiting device, moisture separators/dryers, feedwater distribution system, blowdown and sludge management, access/inspection ports, instrument/sampling taps, and loose part monitoring.

The design specification also established identical requirements for the service life and service environmental conditions of the replacement steam generators. The licensee also specified identical design loading, structural, and seismic requirements for all replacement steam generators. The design specification contained identical requirements for design transients under normal, upset, emergency, faulted, and test conditions.

Additionally, the performance requirements in the design specification were identical for each replacement steam generator, which included:

- Water Level Stability
- Circulation Ratio
- Moisture Carryover
- Steam Carryunder in the Downcomer Annulus
- Reactor Coolant Flow Rate
- Primary-To-Secondary Leakage
- Blowdown Capacity
- Thermal Rating
- Heat Transfer Surface Area
- Tube Plugging Margin
- Fouling Factor
- Overall Heat Transfer Coefficient
- Primary Side Design and Operating Pressure/Temperatures
- Secondary Side Design and Operating Pressures/Temperatures
- Primary Side Design and Operating Flows
- Secondary Side Design and Operating Flows
- Tube Material and Dimensions

The replacement steam generator design developed by Mitsubishi for SONGS Unit 2 and Unit 3 in accordance with the licensee's design specification was translated into the same set of design and fabrication drawings. The team noted that some as-built dimensions varied between Unit 2 and Unit 3 steam generators as a result of the divider plate weld repairs in Unit 3 and other manufacturing processes. However, these dimensional changes did not represent significant deviations from the original design specifications. Therefore, the team determined that no significant differences existed in the design requirements of Unit 2 and Unit 3 replacement steam generators.

4) Fabrication Differences: The team noted that the design specification contained the same general fabrication requirements for the Unit 2 and Unit 3 replacement steam generators. The design specification contained the methods required for fabrication, assembly, inspection, and testing of the replacement steam generators. The specification covered, in part, fabrication requirements for the channel head cladding, tube dimensions, tube wall thickness, tube bend radius, tube "ovality," tubesheet, tube-to-tubesheet joints, tube supports, tube bundle, machined gasketed surfaces, non-ASME steam generator internals, welding methods, post-weld heat treatment, and allowable welding materials. The specification also contained detailed requirements for inspections, tests, and examinations, which included examination methods and personnel qualification requirements.

   The design specification also required the use of "Supplier Deviation Requests" to address technical or quality deviations from the requirements of the Purchase Order or the design specifications, including the disposition of "Repair" or "Accept as-is" conditions identified during the fabrication process and changes to fabrication documents previously approved by the licensee. The team noted that fabrication issues affecting the specified design were submitted to SCE personnel for review and approval.

   Based on discussions with SCE and Mitsubishi personnel and the review of documentation about the fabrication history of Unit 2 and Unit 3 replacement steam generators, the team identified the differences listed below. At the conclusion of the onsite portion of this inspection, the differences between Unit 2 and Unit 3 steam generators as a result of the fabrication process were under consideration for the cause evaluation.

   - Steam Dryer Assembly – During the fabrication of Unit 2 steam generator 2E0-89, Mitsubishi identified a nonconforming condition of the steam dryer assembly that included damaged locking plates of vane jacking devices, displaced bolts, and damaged vanes. The cause of this issue was determined to be inadequate evaluation and control of the design in regard the capacity of the vane jacking devices to sustain all fabrication conditions. Specifically, the vane jacking devices failed to stay in the design position during multiple rotations of the steam generator assembly during fabrication. Mitsubishi corrected the condition, in part, by replacing all vane jacking devices and damaged vanes with a new design, which was also used in the fabrication of the Unit 2 steam generator 2E0-88, and Unit 3 steam generators 3E0-89 and 3E0-88. Additionally, Mitsubishi modified the assembly sequence of the steam dryers.

For Unit 2 steam generator 2E0-89, the steam dryer vanes were assembled in-situ while the steam dryers for Unit 2 steam generator 2E0-88 and Unit 3 steam generators 3E0-88 and 3E0-89 were preassembled before installation in their final position.

- Drilling of Tubesheet Holes – The tubesheet holes in Unit 2 and Unit 3 steam generators where the tubes are inserted for final assembly were made with different drill bits. The Unit 2 steam generator tubesheets were drilled with uncoated drill bits. The Unit 3 steam generator tubesheets were drilled with titanium-nitride coated drill bits, which improved the drill bit life and resolved tooling mark issues experienced in Unit 2.

- Transition Wrapper Welding – The welding of the transition wrapper was performed in different order for each unit. For Unit 2 steam generators, the transition wrapper was welded after the tubes and anti-vibration bars were installed. In Unit 3 steam generators, the transition wrapper was welded before the installation of tubes and anti-vibration bars.

- Cladding Removal Process for the Channel Head – The removal of the stainless steel clad weld from the interior surface of the channel head base metal in preparation for the divider plate weld (i.e. structural butter weld) was performed with different methods in Unit 2 and Unit 3 replacement steam generators. For Unit 2, Mitsubishi used a machining process to remove the cladding in both steam generators. In Unit 3, Mitsubishi used an air carbon-arc gouging process. This method resulted in separation of the butter weld during hydrostatic testing. The root cause evaluation concluded that the air carbon-arc gouging process left carbon deposits on the base metal. Gouging was followed by grinding which was designed to remove the heat affected zone and expected to completely remove the carbon deposits. However, the grinding process left carbon deposits behind, which resulted in the localized areas of high carbon and high base metal hardness due to carburization. The repair of the Unit 3 divider plate welds is addressed in further details in Section 12.0 of this report.

- Helium Leak Test – As part of the fabrication process, Mitsubishi performed a Helium-Nitrogen leak test on the secondary side of the replacement steam generators to check for leaks on the tube-to-tubesheet welds. For all steam generators, this test was performed after completion of the tube-to-tubesheet weld, but prior to the penetrant examination of the tube-to-tubesheet welds and final tube expansion. The leak tests for Unit 2 steam generators were performed at a higher pressure than Unit 3 steam generators. Additionally, the Unit 2 tests were performed using a temporary welded cap on top of the steam generator shell to enclose the secondary side, while a temporary clamped cap was used in Unit 3 steam generators. All tests required the same holding time before starting the test and the same leak rate acceptance criteria.

- Preliminary and ASME Section III Hydrostatic Tests – The number of hydrostatic tests performed in accordance with ASME Section III on the primary and secondary sides of the replacement steam generators varied between Units due

to the results of the initial test in each steam generator. For each replacement steam generator, the hydrostatic tests were performed first on the primary side and then on the secondary side. Both Unit 2 steam generators met the acceptance criteria in the first hydrostatic test. However, during the first hydrostatic test on the secondary side of Unit 3 steam generator 3E0-89, Mitsubishi identified leakage through a tube-to-tubesheet weld that exceeded the ASME Code acceptance criteria. After repairs were completed to address the leakage, the hydrostatic tests were re-performed. Following the second set of hydrostatic tests on Unit 3 steam generator 3E0-89, cracking indications were identified in the divider plate-to-channel head weld. After repairs were completed to address the divider plate weld cracks, a third set of hydrostatic tests were performed in Unit 3 steam generator 3E0-89. Since similar cracking indications of the divider plate weld were identified in Unit 3 steam generator 3E0-88, a second set of hydrostatic tests was performed in this steam generator after the divider plate weld was repaired.

Additionally, prior to each ASME Section III hydrostatic test, Mitsubishi performed a preliminary hydrostatic test of the primary and secondary side of the steam generators at design pressure to check for leakage at the feed pump, pressure filling line, temporary gaskets, and temporary seals. Therefore, each replacement steam generator received an equal number of preliminary and ASME Section III Hydrostatic Tests. The total numbers of hydrostatic tests for each steam generator are summarized below.

**Number of Preliminary and ASME Section III Hydrostatic Tests**

| Steam Generator | Primary Side | Secondary Side | Results |
|---|---|---|---|
| 2E0-89 | 1 | 1 | Acceptance criteria met |
| 2E0-88 | 1 | 1 | Acceptance criteria met |
| 3E0-89 | 1 | 1 | Leakage detected in tube-to-tubesheet weld |
| | 1 | 1 | Divider plate weld separation weld identified |
| | 1 | 1 | Final – Acceptance criteria met |
| 3E0-88 | 1 | 1 | Divider plate weld separation weld identified |
| | 1 | 1 | Final – Acceptance criteria met |

- Pre-Service Inspection – The design specification established similar requirements for the pre-service eddy current examination of Unit 2 and Unit 3 replacement steam generators. The team noted that the eddy current examinations of Unit 2 and Unit 3 steam generators were performed with similar eddy current techniques, including essential variables. However, the circumstances in which the examinations were performed varied for each Unit. For Unit 2, the pre-service examination was performed after the steam generators were delivered at the SONGS jobsite. The steam generators were examined on the shipping saddles, where the position of the tube bundle was at

45 degrees from the gravity neutral position. This position was dictated by the location of the steam generator lifting trunnions which were installed on the upper shell at 45 degree orientation from the steam generator centerline. For Unit 3, the pre-service eddy current examination was performed at the Mitsubishi Kobe facility while the steam generators were still on the fabrication rollers and in the gravity neutral position (i.e. divider plate oriented horizontally). The decision to perform the Unit 3 pre-service examination at the Mitsubishi facility was dictated by delivery schedule considerations resulting from the divider plate weld repairs.

- Flow Limiter for Primary Inlet Nozzles – The replacement steam generators were designed with a flow limiter located in the primary inlet nozzle (see figure below) in order to make the reactor coolant system flow similar to the flow rate of the original steam generator and not exceed the maximum allowable reactor coolant system flow rate. The licensee's evaluation for the engineering design package determined that although the original steam generators had a number of plugged tubes, the reactor coolant system flow rate of the original steam generators was near the design requirement. Because the replacement steam generators has 377 more tubes than the original steam generators, and contained tubes with u-bends versus "square bends", the pressure drop of the replacement steam generators with no plugged tubes would be much less than the original steam generators resulting in a higher flowrate.

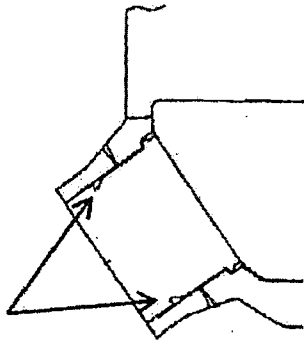


**Replacement Steam Generator Primary Inlet Nozzle (For Illustration Purposes Only)**

The flow limiter was designed to ensure the total "best estimate" reactor coolant flow rate with the replacement steam generators installed would not exceed 106.5 percent of the design volumetric flow rate of 396,000 gallons per minute at a reactor coolant system cold leg temperature of Tcold = 540.9°F. For Unit 2 replacement steam generators, the flow limiter diameter to nozzle inner diameter ratio was 0.94 while the ratio for Unit 3 steam generators was 0.915 due to Unit ? reactor coolant pump replacement. The flow limiter dimensions resulted from a scaled model test performed by Mitsubishi and it was designed to be machined as part of the nozzle base metal.

- Pitch Distance of Tube Support Plate Drilled Holes in Unit 2 Steam Generator 2E0-89 – During fabrication of the tube support plates for Unit 2 steam generator 2E0-89, quality control inspections identified unacceptable measurements of the pitch distance between drilled holes. Mitsubishi fabrication procedures required

verification of the total center-to-center distance between ten inline drilled holes at certain sample points of the tube support plate. The dimensional verification checks identified a total of 200 measurements in tube support plate number 3 and 10 measurements in tube support plate number 6 that did not meet the dimensional acceptance criteria established in the fabrication procedures. Mitsubishi evaluated this non-conformance condition and accepted the condition "as-is" with the SCE's approval. The technical justification for accepting the condition addressed four elements: (a) the impact of the condition on the ability to insert the tubes through the affected areas of the tube support plates, (b) resulting stress on the tubes after insertion, (c) impact of the condition on the tube to anti-vibration gap size, and (d) possible occurrence of tube scratch during inspection. Similar unacceptable measurements were not identified in Unit 2 replacement steam generator 2E0-88 or Unit 3 replacement steam generators 3E0-89 and 3E0-88.

- Tube-to-Tube Clearance in Unit 2 steam generator 2E0-89 – During fabrication of Unit 2 replacement steam generator 2E0-89, interference checks identified that the clearance between the tubes in Rows No. 28 and 30 in Column No. 22 was less than the minimum clearance of 0.13-inch specified in Mitsubishi's inspection procedure. The condition was accepted "as-is" by Mitsubishi and SCE through the supplier deviation request process. The main considerations of the technical evaluation included: (a) thermal expansion difference, (b) tube expansion due to operating pressures, (c) tube displacement due to out-of-plane flow induced vibration, and (d) tube displacement due to seismic acceleration. The team noted that no tube-to-tube wear indications were identified in this area of the tube bundle.

- Anti-Vibration Bar Spacing Issues in Unit 2 Steam Generator 2E0-89 – During fabrication of Unit 2 replacement steam generator 2E0-89, quality control inspections identified unacceptable gaps between tubes and the anti-vibration bars in the outside tube columns. The affected area was identified as welding zone-4. The apparent cause for the anti-vibration bar spacing issue was due to performing the welding of zone-4 while the steam generator was oriented horizontally with this welding zone oriented to the bottom of the bundle. In this configuration, the tube bundle experienced sagging at the time of welding due to gravity. After completion of welding zone 4, the steam generator assembly was rotated 180 degrees for additional assembly steps, but the sagging in the opposite direction caused enlargement of the gaps in welding zone 4 and this enlargement remained approximately the same for all subsequent rotations. When zone-4 was rotated 180-degrees after welding, deflection or sagging of the tube retaining bars due to gravity slightly pulled the anti-vibration bars, increasing the gap between the tube and the anti-vibration bars in this zone.

  With the licensee's approval, Mitsubishi implemented various corrective actions to address the condition in the pending Unit 2 replacement steam generator 2E0-88 and subsequently in Unit 3 steam generators which included: (a) use of smaller spacer blocks between tubes for the installation of anti-vibration bars, (b) re-define the welding zones to limit welding in the horizontal position, and (c) reduce rotations during welding of the other bundle zones. Mitsubishi performed

rework activities in Unit 2 steam generator 2E0-89 to restore anti-vibration bar spacing to design specifications. These activities resulted in better gap distribution. All the tube-to-anti-vibration bar gaps exceeding the initial dimensional criteria were further evaluated and accepted in accordance with Mitsubishi's gap size evaluation procedure.

- Rotations of Steam Generator Assembly for Anti-Vibration Bar Installation and Welding – The team noted that welding of anti-vibration bars structure required rotating the steam generators several times. As a result of the corrective actions generated to address the anti-vibration bar spacing issues in Unit 2 steam generator 2E0-89, the installation procedure was revised to reduce the number of rotations for anti-vibration bar installation to attain better gap control. This procedure revision resulted in different number of rotations in each replacement steam generator. Steam generators Unit 2 E0-89, Unit 2 E0-88, Unit 3 E0-89, and Unit 3 E0-88 received 11.25, 4, 3.5, and 3.5 rotations, respectively, during installation of the anti-vibration bars structure.

- Temporary Installation of Plastic Ties – In order to limit the displacement of anti-vibration bars during rotation of the steam generator assembly for welding of the anti-vibration bars structure, Mitsubishi revised the installation procedure to install temporary plastic ties between the retaining bars and the tubes. This step of the anti-vibration bar assembly process was performed in a different sequence for Unit 2 and Unit 3 steam generators. For Unit 2, the installation of plastic ties occurred after welding the transition wrapper, the Helium leak test, and tube hydraulic expansion, but before welding the channel head to the tubesheet, the hydrostatic tests, and the pre-service inspection. In Unit 3, the installation of plastic ties was performed between welding the transition wrapper and the Helium leak test.

- Dimensional Controls of Anti-Vibration Bar Structure – According to Mitsubishi's preliminary cause evaluation taking place at the time of this inspection, the controls of critical dimensions affecting the clearances between the tube and the anti-vibration bars were gradually improved throughout the fabrication of the Unit 2 and Unit 3 steam generators. This improvement on dimensional controls was a consideration for the determination of the failure mechanism leading to tube-to-tube wear in Unit 3.

  The first dimensional control under consideration was the improvement of tube roundness in the section of the tubes that was bent to form the U-bend shape. During fabrication of Unit 2 steam generator 2E0-89, the supplier of tubular product for Mitsubishi (i.e. Sumitomo), experienced quality issues to meet the G-values established in the design specifications, resulting in a high number of tube rejections. The G-value was a measure of departure from roundness, or "ovality," after the tubes were bent and it was controlled in order to control the gap between tubes and anti-vibration bars (see figure below). The G-values were measured at different locations along the U-bend section of the tubes for a selected number of tubes per row, as established in Mitsubishi's procedure. The acceptance criteria for G-value varied depending on the row where the tubes

were installed. The acceptance criteria also remained the same throughout the fabrication of Unit 2 and Unit 3 replacement steam generators.

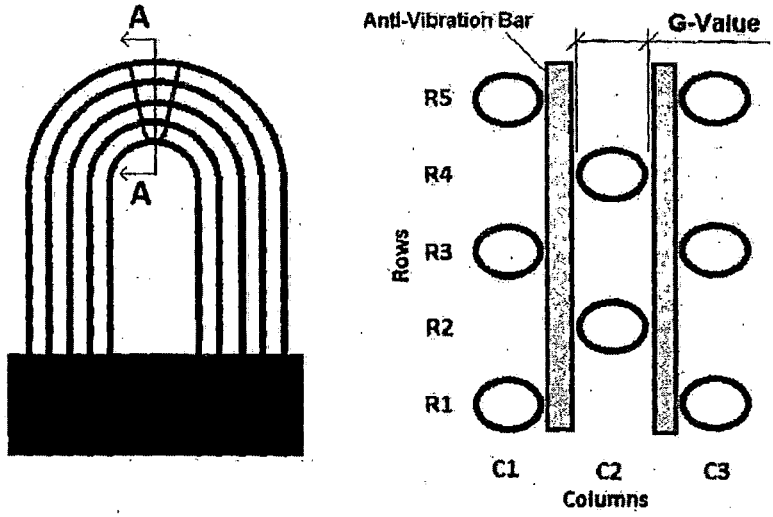


**Section A-A**

**Description of G-Value Parameter (Conceptual Drawing – For Illustration Purposes Only)**

Based on discussions with licensee personnel and documentation reviews, the team noted that Sumitomo implemented measures to improve the quality of the tube bending process which resulted in less deviation of G-values and a reduction in the amount and variability of tubing "ovality." Based on the statistical analysis of G-value data collected during fabrication of the Unit 2 and Unit 3 steam generators, Mitsubishi concluded that the G-values gradually decreased since the fabrication of the first steam generator.

Another dimensional control under consideration was the variability of anti-vibration bar dimensions. Mitsubishi's fabrication procedures required inspection of various dimensions of the anti-vibration bars to control the gap between the anti-vibration bars and the tubes. These dimensions were: thickness in the straight sections, twisting and flatness of the straight sections after bending, and thickness of the anti-vibration bar tip (i.e. nose) after bending. Among these dimensions, the twisting and flatness of the straight sections after bending were verified using a "Go or No-Go" approach based on the acceptance criteria in Mitsubishi's procedures but no specific measurements were required to be maintained by procedure. Additionally, the acceptance criteria for anti-vibration bar dimensions remained the same throughout the fabrication of Unit 2 and Unit 3 replacement steam generators. Mitsubishi conducted a preliminary statistical analysis of the available dimensional data for anti-vibration bars and the team concurred that there were minor differences in the statistical distribution of these dimensions in Unit 2 and Unit 3 steam generators.

Comn
any de
[gew]l
inform

Engineering Change Package (10 CFR 50.59): The team determined that the licensee's evaluation for changes in the updated final safety analysis report's design methodologies for the replacement steam generators was consistent with SONGS procedures for the implementation of 10 CFR 50.59 requirements. The licensee's evaluation contained in Engineering Change Packages 800071702 and 800071703 for the Unit 2 and Unit 3 replacement steam generators, respectively, determined that the replacement of the original steam generators did not affect the current licensing basis to the extent of needing prior approval from the NRC as required by 10 CFR 50.59.

In the 50.59 screening evaluation associated with the engineering change package for the Unit 2 and Unit 3 replacement steam generators, the licensee determined that the proposed activity did not adversely affect a design function, or the method of performing or controlling a design function described in the updated final safety analysis report. The licensee also determined that the steam generator replacement activity did not change a procedure in a manner that adversely affected how an updated final safety analysis report design function is performed or controlled. Additionally, the licensee determined that the steam generator replacement activity did not involve a test or experiment not described in the updated final safety analysis report. The licensee evaluated the following updated final safety analysis report design functions in the 50.59 screening:

- Steam Generator Design Functions
- Reactor Coolant System Structural Integrity
- Emergency Core Cooling System Performance
- Non-Loss of Coolant Accident Transients
- Containment Pressure-Temperature Analysis
- Low Temperature Overpressure Protection
- Reactor Protection System, Engineered Safety Features Actuation System, Core Operating Limit Supervisory System, and Core Protection Calculations
- Nuclear Steam Supply System Performance
- Non-Safety Related Control Systems Performance

However, the 50.59 screening evaluation identified three methods of analysis described in the updated final safety analysis report that were affected by the proposed steam generator replacement and required further evaluation against the criteria in 10 CFR 50.59. The affected methodologies are described below:

- Seismic Analysis of Reactor Vessel Internals – The original analysis of SONGS Unit 2 and Unit 3 reactor vessel internals with the original steam generators was performed with the methodology described in Combustion Engineering Topical Report CENPD-178, "Structural Analysis of Fuel Assemblies for Combined Seismic and Loss of Coolant Accident." Subsequent to the submittal of this report, Combustion Engineering revised the methodology by modifying modeling techniques, computer codes, testing methods, and acceptance criteria in response to changes in licensing requirements. Consequently, the original report was resubmitted to the NRC as CENPD-178-P, Revision 1-P, August 1981. This revision was approved by the NRC in a Letter from H. Bernard to A. Scherer,

"Acceptance for Referring of Licensing Topical Report CENPD-178," dated August 6, 1982. The licensee used this revised methodology for the replacement steam generators and considered it as a methodology approved by the NRC for the intended application.

- Reactor Coolant System Structural Integrity – The structural analysis of the original steam generators used ANSYS software for the thermal and stress analyses while the replacement steam generators were analyzed using ABAQUS software. ANSYS was described in the updated final safety analysis report as a large-scale, general-purpose, finite element program for linear and nonlinear structural and thermal analysis of the reactor coolant loop components. The licensee considered ABAQUS to be similar to ANSYS. The licensee compared both programs using thermal and stress sample problems. The comparison demonstrated that the results varied from theoretical solutions by no more than 1 percent, and ABAQUS and ANSYS results themselves were also within 1 percent of each other. The variability of results was determined to be within the margin of error for the subject type of analysis.

- Tube Wall Thinning Analysis – The original steam generator analysis used CEFLASH computer program for the main steam line break mass-energy blowdown analysis, whereas the replacement steam generator analysis used manual calculations to represent the main steam line break blowdown loads by applying the maximum possible tube differential pressure, which bounded the pressure calculated by CEFLASH.

  For loss of coolant accident analysis, the original steam generator used STRUDL computer program to calculate displacement histories and then ANSYS computer program to calculate tube stresses. The tube stresses for the replacement steam generators were determined using ANSYS computer program based on the blowdown forces. For the original steam generators the combination of loads analyzed was primary loop pipe break plus design basis earthquake and main steam line break plus design basis earthquake. For the replacement steam generators, the loss of coolant accident, design basis earthquake, and the main steam line break events were combined as one limiting event, which SCE considered to be a more conservative method of evaluation relative to the original steam generators. The licensee determined that the results of the tube wall thinning analysis for the replacement steam generators were conservative or essentially the same and the methodology used did not represent a departure from a method of evaluation described in the updated final safety analysis report.

Further discussion is contained in Section 13.0 on the methodology used by the licensee for the reactor coolant system structural integrity and tube wall thinning analysis.

The team noted that a key methodology for the design of the original and replacement steam generators was the thermal-hydraulic code used to model the flow conditions in the steam generators. The original steam generators were designed using ATHOS thermal-hydraulic code while the replacement steam generators were designed with a proprietary code from Mitsubishi (Need to verify

this with Joel. Think the generators were designed before ATHOS was developed in 1985). Mitsubishi's code was accepted by SCE for the design of the replacement steam generators. The team noted that the updated final safety analysis report did not specifically describe ATHOS as the code used for the design of the original steam generators and therefore the change in thermal-hydraulic code did not constitute a change in methodology or a change in an element of a methodology described in the updated final safety analysis report. The updated final safety analysis report did describe the computer code CRIB as the code used to analyze overall steam generator performance. As described in the updated final safety analysis report, CRIB was used to establish the recirculation ratio and fluid mass inventories as a function of power level in the original steam generators.

With regard to the major design changes between the original and replacement steam generators, the updated final safety analysis report did not specify how the original steam generators relied on special design features such as the stay cylinder, tubesheet, tube support plates, or the shape of the tubes to perform the intended safety functions. The description of the original steam generators was focused on the overall thermal performance characteristics and the applicable codes and standards used for fabrication. The updated final safety analysis report provided a brief description of the egg-crate tube support plate design and its function to prevent concentration of impurities in the tube-to-tube support plate gap, which could lead to tube degradation. The updated final safety analysis report also described degradation issues of the egg-crate tube support plate design as a result of flow-accelerated corrosion and the corrective actions taken to mitigate this degradation mechanism.

Regulatory Guide 1.187, "Guidance for Implementation of 10 CFR 50.59, Changes, Tests, and Experiments," November 2000, allows the use of NEI 96-07, "Guidelines for 10 CFR 50.59 Implementation," Revision 1 for methods that are acceptable for complying with 10 CFR 50.59. Per NEI 96-07, changes affecting structures, systems, or components that are not explicitly described in the updated final safety analysis report can have the potential to adversely affect structure, system, or component design functions that are described and thus may require a 10 CFR 50.59 evaluation. Consistent with this guidance, SCE's 50.59 screening evaluated the differences in subcomponents between the original steam generators and replacement steam generators as to whether the differences adversely affected the design function (reactor coolant pressure boundary) of the steam generators. The replacement steam generators were designed and fabricated in accordance with quality assurance requirements, and 10 CFR 50.59 does not require the licensee to presume deficiencies in the design or fabrication.

Based on the updated final safety analysis report description of the original steam generators, one unresolved item associated with the 50.59 review was identified and is discussed in Section 13.0 of this report.

## 5.0 Quality Assurance/Quality Control (Charter Item 5) (Mitsubishi Charter Item 4)

The team reviewed numerous documents from both SCE and Mitsubishi (including sub-contractors, such as Sumitomo) associated with the design, fabrication, and

manufacturing of the steam generators for both units. The team reviewed SCE and Mitsubishi's quality assurance program, procedures and implementation activities for the control of purchased material, equipment, and services; inspections; procurement document control; and corrective action and nonconformance activities. Specifically, the team reviewed a sample of Mitsubishi nonconformance reports, audit, survey, all SONGS condition action requests, audits, surveillances, stop work orders, and supplier deviation requests associated with the design and manufacturing of the steam generators. The team concluded that these portions of SCE and Mitsubishi's quality assurance program regarding its safety-related activities were appropriately controlled and implemented.

5.1 SONGS Quality Assurance/Quality Control

a. Inspection Scope

The team reviewed SCE's implementation of their quality assurance program to determine if it complied with the requirements of 10 CFR 50, Appendix B, "Quality Assurance Criteria for Nuclear Power Plants and Fuel Reprocessing Plants." The team reviewed SONGS implementing procedures, quality assurance manual, vendor audits, procurement specifications, corrective action requests, and numerous other documents, as well as interviewed a number of quality assurance/control and engineering personnel to determine the appropriateness of activities affecting quality conducted during fabrication, manufacturing and delivery of the replacement steam generators.

b. Observations and Findings

No findings were identified.

1) Policies and Procedures for Supplier Selection and Control

The team reviewed Quality Assurance Manual, Section 17.2.7, "Control of Purchased Material and Services,", which defines the process used to ensure that purchased material, source material, and subcontracted services conform to applicable codes and standards. Section 17.2.7.2 of the quality assurance manual provided measures for the approval and control of suppliers and describes the methods that SCE uses to conduct technical and quality assurance evaluations of potential suppliers. Specifically, SCE evaluated an audit performed by Dominion (DA 2002-92, "Dominion Audit of Mitsubishi Heavy Industries"). The evaluation was performed and documented in accordance with SONGS policies and implementing procedures that govern the control of purchased material, equipment, and services. The results of SCE Evaluation MHI-01-04, "Evaluation and Review of Contractor, Consultant, Utility or Licensee Audit Report", stated that Mitsubishi was conditionally qualified for the fabrication and design of the replacement steam generators. An audit was performed by SCE when a sufficient quantity of work had been performed to demonstrate implementation of Mitsubishi's quality assurance program. Southern California Edison-'s oversight of Mitsubishi also included verification of Mitsubishi's activities during fabrication, inspections, testing and shipment of the procured item. After approximately 14 months from the initial evaluation SCE removed the conditional qualification based on results from Evaluation MHI-10SV-05, "Source

Evaluation Report of MHI," dated February 8, 2006, and MHI-3SV-06, "Source Verification Report of MHI," dated May 3 2006, and implementation and verification of specific corrective actions. Part of the SONGS oversight plan of Mitsubishi included the placement of SCE quality assurance/quality control personnel (residents) at the Mitsubishi facility. Plan SGR-A10183, "Replacement Steam Generator Resident Oversight Plan," described the roles and responsibilities of the resident management, engineering, and quality oversight implementation strategy for the replacement steam generators. This oversight plan was created to provide reasonable assurance that the design, licensing, fabrication, delivery, and acceptance of the SONGS replacement steam generators were performed in accordance with specified SCE, industry, regulatory, and Code requirements. The NRC team noted that after the resident was placed at Mitsubishi, Source Verifications and Surveillances performed by SCE decreased. After the NRC team conducted several interviews with the SCE personnel responsible for oversight of Mitsubishi it was determined that the resident provided adequate oversight of Mitsubishi's activities. Nuclear Oversight Division Project Oversight Quarterly Reports were provided by SCE that demonstrated no decrease in SCE oversight of Mitsubishi. These responsibilities were shifted to the resident at Mitsubishi. During the review of the documentation generated by the resident the NRC team noted that the resident was performing these activities on behalf of SCE.

2) Purchase Order Review

The team reviewed purchase order 6C294014 from Edison Material Supply LLC, issued September 28, 2004, for the design, fabrication, and delivery of four replacement steam generators for SONGS Units 2 and 3. The procurement order stated that all related work was to be performed in accordance with Specification SO23-617-01, "Specifications for Design and Fabrication of RSG for Units 2 and Unit 3." Specification SO23-617-01 identified the codes, standards, regulations and other documents applicable to the design, fabrication, and delivery of the replacement steam generators. For example Specification SO23-617-01 invoked American Society of Mechanical Engineers Boiler and Pressure Vessel Code, American National Standards, American Society for Testing and Materials Standards, and Electric Power Research Institute Technical Report 016743-V2R1, "Guidelines for PWR Steam Generator Tubing Specifications and Repair," among others.

3) Supplier Audit and Surveillance Reports

The team reviewed a sample of audits and surveillances performed on Mitsubishi to verify SCE's approval process of Mitsubishi and subcontracted services. The team noted that the audits and annual assessments reviewed were adequately documented and provided evidence of Mitsubishi's compliance with quality assurance requirements. The team also verified that audit reports supported the conclusions made by SCE.

5.2 Mitsubishi Quality Assurance/Quality Control

a. Inspection Scope

The team reviewed Mitsubishi implementation of their quality assurance program to determine if it complied with the requirements of 10 CFR 50, Appendix B, "Quality Assurance Criteria for Nuclear Power Plants and Fuel Reprocessing Plants." The team also reviewed a sample of reports from audits and surveys that Mitsubishi conducted of various subcontractors, such as Sumitomo to determine the adequacy of oversight provided by Mitsubishi activities affecting quality and that contracted activities were implemented in accordance with the Mitsubishi-approved quality assurance program. In addition, the team reviewed Mitsubishi's Approved Suppliers List to verify that vendors listed were qualified according to Mitsubishi's specifications and that the list was maintained current.

b. Observations and Findings

No findings were identified.

1) Policies and Procedures for Supplier Selection and Control

The team reviewed Mitsubishi Quality Assurance Manual, Section 4, "Procurement Control," of the which defines the process used to ensure that purchased material, source material, and subcontracted services conform to the applicable requirements of the American Society of Mechanical Engineers Code and to customer procurement documents. Section 4.4 of the Quality Assurance Manual provided measures for the approval and control of suppliers and described the process that Mitsubishi used to conduct surveys or audits, as required. Additionally, Section 4.4 provided guidance for the preparation of purchase specifications and subcontract specifications, including the imposition of regulatory requirements for the American Society of Mechanical Engineers Code, Section III products.

The team reviewed Procedure BUH94-06, "Vendor Evaluation Procedure," which provided guidance on the evaluation of the quality control capability of suppliers by performing surveys, audits and performance evaluations of the supplier quality assurance program. Procedure BUH94-06 provided a detailed description of the entire process to be followed by auditors before, during and after a survey/audit was performed.

No issues were identified.

2) Supplier Audit and Surveillance Reports

The team reviewed a sample of external audits and surveys to verify Mitsubishi's approval process of Sumitomo Metal Industries, Limited, Steel Tube Works and Sumitomo Metal Industries, Limited, Pipe & Tube Company Wakayama Steel Works. The team noted that the audits and annual assessments reviewed were adequately documented and provided evidence of each company's compliance with quality assurance program requirements. The team also verified that audit checklists were prepared and completed for the audit and contained sufficient objective evidence to support the conclusions made by Mitsubishi.

During the review, the team learned that as a consequence of a Nonconformance UHNR-SON-RSG-06N005 related to inadequate lot control during final mill annealing of the tubing, Mitsubishi issued a stop work order to Sumitomo. As part of their process Mitsubishi visited Sumitomo to find the root cause of the nonconformance. After a review of Sumitomo's corrective action, Mitsubishi was able to confirm the adequacy of the corrective actions and preventive actions. Mitsubishi released Stop Work Order UHH-G06A097 imposed on Sumitomo.

On May 8, 2007, Mitsubishi performed Special Audit UHQ-07N004, on Sumitomo, in order to confirm adequacy of activities based on Sumitomo Corrective Action Plan UHCP-07N004. During the audit Mitsubishi found two findings and made one recommendation. Both findings required corrective action from Sumitomo. The Mitsubishi audit indicated that Sumitomo was not able to perform adequate activities for manufacturing heat transfer tubing in accordance with Sumitomo's shop manual. The causes of the deficiencies identified during the audit were a result of Sumitomo's staff failing to follow the shop manual requirements. Because the two findings were related to the stop work order, Mitsubishi did not allow Sumitomo to start manufacturing activities until adequate implementation of corrective actions were confirmed by Mitsubishi. On June 21, 2007, Mitsubishi verified Sumitomo implementation of the corrective actions. During this visit at Sumitomo, Mitsubishi verified the operations involving straight tube fabrication prior to tube bending operations were performed in accordance with Sumitomo's shop manual. Mitsubishi found that the same type of corrective actions taken by Sumitomo for straight tube fabrication operations applied to tube bending operations. During the review of the implementation of the corrective actions Mitsubishi could not verify acceptability of Sumitomo tube fabrication operations for the tube bending process. Mitsubishi allowed Sumitomo to restart operation only for the straight tube fabrication. On July 13, 2007, Mitsubishi subsequently confirmed the adequacy of Sumitomo corrective actions on tube bending processes. Mitsubishi verified that the bending operations followed the requirement of the Sumitomo' shop manual. On July 17, 2007, Mitsubishi lifted the restrictions imposed on Sumitomo and they were allowed to restart operations.

No issues were identified.

3) Maintenance of the Approved Supplier List

The team reviewed Mitsubishi Quality Assurance Manual Section 4, "Procurement Control," which defined the controls for the maintenance, distribution, and update of Qualified Vendor List UES-20100006. According to Section 4, the Nuclear Plant Quality Assurance Section had the responsibility for preparing, approving, and distributing the qualified vendor list and any subsequent revisions. In addition, a review by the quality assurance engineer was required prior to final document approval. Mitsubishi was informed of changes to their supplier's quality assurance manuals through procurement requirements imposed on the suppliers on their certificate of qualification as an approved vendor. If the vendor did not maintain their quality assurance program, they were removed from the qualified vendor list. Prior to issuing a Quality Assurance Manual revision, approved vendors were required to

send a copy to Mitsubishi for review and approval, after which Mitsubishi updated the qualified vendor list with the latest revision number and date.

No issues were identified.

5.3 Quality Assurance Conclusion

The team concluded that the quality assurance program requirements for quality activities to support the replacement steam generator project were consistent with the requirements of 10 CFR Part 50, Appendix B. The team also concluded that SCE's and Mitsubishi's quality assurance program requirements were appropriately translated into implementing procedures to support the replacement steam generator project.

6.0 Implementation of Steam Generator Industry Information (Charter Item 6) (Mitsubishi Charter Item 3)

a. Inspection Scope

The team reviewed procurement documentation, Mitsubishi design documentation, and the 10 CFR 50.59 review package to assess SCE's and Mitsubishi's consideration and implementation (as appropriate) of operating experience as part of the steam generator replacement project, and in the steam generator tube inspections conducted during the current outages for SONGS Units 2 and 3. The team interviewed various personnel with respect to operating experience considerations relating to major design changes incorporated into the replacement steam generators. The team reviewed operating experience in NRC generic communications and worldwide plant operating experience that might potentially be relevant to conditions observed at SONGS.

b. Observations and Findings

No findings were identified.

The original steam generators installed throughout the domestic fleet of pressurized water reactors, including SONGS, experienced widespread corrosion of the tubes and tube support plates, stress corrosion cracking of the tubes, and wear at tube supports. These problems led to the replacement of nearly all of the original steam generators, in most cases well before the end of their design lifetime. For SONGS, the design of the replacement steam generators included a number of design changes to correct life limiting problems with the original steam generators, based in part on consideration of SONGS-specific and industry-wide operating experience. This included use of more corrosion resistant materials for the tubing and tube support plates to mitigate corrosion and stress corrosion cracking issues experienced in the past. The licensee's bid specification required that the stay cylinder feature of the original steam generators be eliminated to maximize the number of tubes that could be installed in the replacement steam generators and to mitigate past problems with tube wear at tube supports caused by relatively cool water and high flow velocities in the central part of the tube bundle. Mitsubishi employed a broached trefoil tube support plates instead of the egg crate supports in the original design. In addition to providing for better control of tube to support plate gaps and easier assembly, the broached tube support plates were

intended to address past problems with the egg crate supports by providing less line of contact and faster flow between the tubes and support plates, reducing the potential for deposit buildup and corrosion. Mitsubishi selected a u-bend configuration for the upper part of the tube bundle instead of the square bend design of the original steam generators based on its experience that u-bends were easier to fabricate and support and were easier to inspect.

The team's review of Mitsubishi design documentation for the anti-vibration bars indicates that Mitsubishi considered wear in the u-bend region as the most important issue affecting the anti-vibration bar design. Mitsubishi reviewed operating experience regarding wear in the u-bend region of replacement steam generators and trended the experience data as a function of steam generator manufacturer, tube packing arrangements (tube pitch, square versus triangular arrays), and steam generator size. The SONGS steam generators are relatively large, and Mitsubishi acknowledged that this and the tight tube packing geometry could affect wear experience. Mitsubishi stated that the SONGS replacement steam generator were designed to minimize these concerns by providing more support points with shorter spans in the u-bend region along with effective zero gaps between the tubes and anti-vibration bars during steam generator operation. Mitsubishi manufacturing was designed on achieving very small uniform gaps between the tubes and anti-vibration bars during assembly.

Engineering Change Package NECP 800071703 for the replacement steam generators evaluated industry operating experience as it related to the manufacture and operation of the replacement steam generators. Several of these experiences related to fabrication issues, lack of weld quality, material defects, loose parts, lack of cleanliness, and failure to fully expand tubes in the tubesheet. The licensee found most of these issues to be applicable to the replacement steam generators at SONGS, but that these kinds of issues would be adequately addressed by the supplier's (typically Mitsubishi) augmented quality assurance procedures and continuous quality oversight by the licensee. The licensee also cited augmented receipt inspections, in-process verifications, foreign material exclusion and control, and cleanliness inspections on the part of the supplier or the licensee, as applicable, as addressing these issues.

The licensee addressed industry operating experiences relating to stress corrosion cracking of steam generator tubing by noting that the Alloy 690 thermally treated tubing in the replacement steam generators were expected to be substantially more resistant to stress corrosion cracking than the tubing alloys used in earlier model steam generators. The licensee also addressed experience at another unit which experienced tie rod and consequential tube bow as a result of differential thermal expansion between the tubes and shroud and unexpected interference between some tube support plates. The stay rod (equivalent to tie rods at other unit) and shroud material for the replacement steam generators have been selected to have similar coefficients of thermal expansion which would preclude a similar problem.

Steam Generator Degradation Assessment 51-9176667-001 (prepared by AREVA) supporting steam generator inspections during the current outages for Units 2 and 3 evaluated industry operating experience relating to steam generator in-service inspections. This included operating experience reports, including NRC Information Notice 2010-05, "Management Of Steam Generator Loose Parts And Automated Eddy

Current Data Analysis," relating to eddy current test probe issues and data analysis errors. In response to these issues, SCE personnel stated that specific training was given to the data analysts at SONGS on the lessons learned from these experiences and where applicable, appropriate data was included in the SONGS site specific performance demonstration. The licensee also described additional measures that would be taken at SONGS to address these issues. The review also addressed operating experience reports dealing with unexpected tube support indications or lack thereof. In response, SCE stated that indicated anti-vibration bar locations by eddy current will be compared to the anti-vibration bar locations specified in the Mitsubishi design drawings.

Steam Generator Degradation Assessment 51-9176667-001 also addressed numerous operating experience reports involving loose parts and foreign objects in steam generators, including several instances involving resultant damage to steam generator tubing. These reports included NRC Information Notices 2004-10, "Loose Parts in Steam Generators," 2004-16, "Tube Leakage Due to a Fabrication Flaw in a Replacement Steam Generator," and 2004-17, "Loose Part Detection and Computerized Eddy Current Analysis in Steam Generators." Some of these reports dealt with eddy current probes, or pieces of probes, which were left behind as loose parts on the primary side. Most of the operating experience reports related to lose parts and foreign objects on the steam generator secondary side. In response, SCE approach for addressing this issue was through procedure changes and secondary side visual inspections which included the open tube lane, the entire peripheral annulus, and appropriate visual examination followup on eddy current indications of possible loose parts. The inspection with the exception of the loose parts component was performed, as scheduled, during the current refueling outage for SONGS Unit 2. The inspection for loose parts will be performed at the first scheduled inspection during the next refueling outage. The team noted that possible loose parts indications were not found during the 100 percent eddy current test inspection of the Unit 3 steam generators during the current outage. The team also noted that secondary side visual inspections were performed in the upper bundle area of the Unit 3 steam generators to evaluate the tube-to-retainer bar intersections and in a limited area above the 7th tube support plate.

The NRC staff issued many generic communications relating to steam generator tube integrity issues since the 1980s. The team reviewed these documents and determined that many of these related to the potential for stress corrosion cracking of the tubes which the staff found was not expected to be a concern for the thermally treated Alloy 690 material in the SONGS replacement steam generators by virtue of its greatly enhanced resistance to stress corrosion cracking. Most of the others related to problems encountered with eddy current flaw detection and sizing, the occurrence and detection of loose parts/foreign objects, and monitoring of primary to secondary leakage. The team's review indicated that lessons learned from these NRC generic communication documents had generally been incorporated into industry guideline documents relating to steam generator inspections, monitoring of primary-to-secondary leakage, and other guidelines documents prepared by the Electrical Power Research Institute. This information was incorporated into the licensee's inspection and leakage monitoring guidelines.

The team reviewed NRC generic communications not falling into one of the above

categories for potential relevance to SONGS Unit 2 and 3. One of these was NRC Information Notice 2004-16 concerning an operational leakage event at another plant due to damage caused by a packing screw during transport to the steam generator manufacturer. The licensee stated in its steam generator change package that this incident was precluded for SCE by prohibiting the use of screws and nails as fasteners for tubing shipping crates. The licensee also addressed NRC Information Notice 2007-37, "Buildup of Deposits in Steam Generator," concerning fatigue of a low row u-bend at a foreign unit as a result of deposit build up and lack of support for the low row u-bend. Engineering Change Package NECP 800071703 specified that this type of incident was precluded in the replacement steam generators by virtue of anti-vibration bar supports extending to the low row u-bends. Steam Generator Degradation Assessment 51-9176667-001 documented that this type of problem reflected an advanced stage of deposit accumulation that was not anticipated for the foreseeable future in the SONGS replacement steam generators.

7.0 Packing, Shipping, Handling, and Receipt Inspection (Charter Item 7)

a. Inspection Scope

The team interviewed licensee personnel involved with the packing, shipping, handling, and receipt inspection of the replacement steam generators. In addition, the team reviewed SCE receipt acceptance criteria to assess if critical attributes were appropriately specified and if the licensee had the ability to assess acceptability of meeting those acceptance criteria. The team reviewed evaluations associated with supplier deviation reports, nuclear notifications and changes to handling specifications. With respect to replacement steam generators the team focused on differences in SONGS shipping, handling, and receipt acceptance between the Unit 2 and 3 steam generators from the manufacturing site in Japan to final installation on site.

b. Observations and Findings

No findings were identified.

The team identified three unresolved items for which additional information is required to determine if performance deficiencies exist or if the issues constitute violations of NRC requirements.

(1) Introduction: The team identified an unresolved item associated with Unit 3 steam generators not shipped in accordance with specification SO23-617-01, "Design and Fabrication of Replacement Steam Generators for Units 2 and 3" (title does not match Documents Reviewed section – please check other titles for your sections) and requirements for handling, storage, and shipping. Specifically, ANSI N45.2-1977, "Quality Assurance Program Requirements for Nuclear Facilities," required a special protective environment for handling, storage, and shipping of the replacement steam generators. However, because of schedule changes, the Unit 3 protective environment which included maintaining a nitrogen pressure and a monitoring plan was altered significantly.

Description: The team evaluated specifications associated with the shipping and handling of the Unit 2 and 3 replacement steam generators. Based on the information evaluated by the team, the steam generators procurement and shipping specifications required monitoring and maintenance of nitrogen atmosphere inside the replacement steam generators during shipment. Supplier Deviation Request SDR 10041870-09091 dated December 1, 2009, documents a request "not to control the positive pressure, the dew point of nitrogen, and the oxygen content on the primary and secondary side of the Unit 3 replacement steam generators to accelerate delivery schedule."

Specification SO23-617-01, "Design and Fabrication of Replacement Steam Generators for Units 2 and 3," Revision 4, Section 3.16.3, specifies the supplier shall be responsible for monitoring and maintaining nitrogen atmosphere inside the steam generators during their shipping from Mitsubishi to the California port discharge point. The team noted that Unit 3 steam generators did not require, monitoring or control of dew point, oxygen concentration, inside nitrogen pressure. The team could not identify if this was properly evaluated (Reference Section 5 of shipping and handling procedure SO23-617-1-M1350).

Additional review and follow up will be required to review the evaluations and corrective actions associated with the maintaining the Unit 3 replacement steam generators protective environment during shipping and then determine whether this issue represents a performance deficiency or constitutes a violation of NRC requirements. This issue is identified as URI 05000362/2012007-05, "Shipping Requirements not in Accordance to Industry Standards."

(2) Introduction: The team identified an unresolved item associated with the shipping and handling specifications requiring methods of tube bundle support. The team could not determine if this requirement to provide a tube bundle support method was adequately evaluated by SCE.

Description: Based on the information gathered by the team on shipping and handling specifications associated with the Unit 2 and 3 replacement steam generators, the team could not determine that Mitsubishi or SCE adequately considered the potential impact of not providing methods of tube bundle supports as required in SO23-617-01, "Design and Fabrication of Replacement Steam Generators for Units 2 and 3." In response to the team questions regarding tube bundle support methods the team was provided with results from Procedure L5-04GA069, "Sagging Measurement Procedure," Revision 7. However the team noted the procedure is considered a non-quality affecting procedure and used for reference only.

Additional review and follow up will be required to review the evaluations associated with the requirements to provide tube bundle support during shipping for the Unit 2 and 3 steam generators and then determine whether this issue represents a performance deficiency or constitutes a violation of NRC requirements. This issue is identified as URI 05000362/2012007-06, "Shipping Requirements not in Accordance to Design and Fabrication Specifications."

(3) Introduction: The team identified an unresolved item associated with evaluation of excessive shipping induced forces of Unit 3 replacement steam generator 3E-088.

Description: The team reviewed the SG shipping accelerometer data reports for both Unit 2 and Unit 3. In addition, the team also reviewed shipping and handling records and identified the following:

- Different transoceanic shipping companies and ships were used (U2: Happy Ranger, U3: Enchanter)
- During the discharge from the ship Unit 3 replacement steam generator 3E0-88 (3B) recorded simultaneous signals on the three attached accelerometers
- Unit 3 steam generator 3E0-88 was the only steam generator to record simultaneous signals on the three attached accelerometers
- Unit 3 steam generators received significantly more accelerometers hits compared to Unit 2

Unit 3 replacement steam generator 3E0-88 accelerometers indicated up to a 1.23 g spike with a simultaneous recording on all three of the attached accelerometers. Mitsubishi provided an evaluation of the forces which showed loads were within allowable stress limits but exceeded stress for an operating basis earthquake. The team was not able to determine if this was properly considered.

Additional review by the NRC is required to fully assess if the shipping forces contributed to the tube-to-tube wear in Unit 3 and then determine whether this issue represents a performance deficiency or constitutes a violation of NRC requirements. This issue is identified as URI 05000362/2012007-07, "Unit 3 Steam Generator 3E-088 Stresses Related to Handling."

8.0 Thermal-hydraulic and Flow Induced Vibration Modeling (Charter Item 8)

a. Inspection Scope

The team conducted and overall review of Mitsubishi thermal-hydraulic design documents and drawings used in the manufacture of the Units 2 and 3 steam generators. The team developed an independent ATHOS model to run simulations for various operating conditions to assess thermal-hydraulic phenomena in the steam generators and assess differences in key parameters based on changing operating conditions. The objective of the modeling was to understand the interactions of the key parameters to compare ATHOS modeling results to the degradation trends found during the eddy current inspections.

The team was not able to perform any independent tube vibration analysis because the NRC does not have the associated vibration software programs. However, since two key outputs of the thermal-hydraulic code are inputs to the vibration model, the ATHOS model results for fluid velocity and void fraction were used to predict increases or decreases in vibration forces and amplitude.

b. Observations and Findings

No findings were identified.

The team identified one unresolved item for which additional information is required to determine if a performance deficiency exists or if the issue constitutes a violation of NRC requirements.

(1) Introduction: The team identified an unresolved item associated with the adequacy of Mitsubishi's FIT-III thermal-hydraulic code. The FIT-III code predicted non-conservative low velocity and low void fraction results which were used as inputs to the vibration code FIVATS. These non-conservative thermal-hydraulic results lead Mitsubishi to conclude that margins to instability were significantly larger than they actually were.

Description: Replacement steam generators were designed and manufactured in accordance with SONGS Design Specification SO23-617-1, "Conformed Specification for Design and Fabrication of Replacement Steam Generators for Unit 2 and Unit 3," Revision 4 and ASME Section III, "Rules for Construction of Nuclear Facility Components". The replacement steam generators had enhanced materials and maintenance features and were considered like-for-like replacement of the original steam generators.

The tube bundle, comprised of 9727 u-tubes, is supported by a set of seven tube support plates which are maintained and spaced by a network of tie-rods. The ends of the u-tubes were welded onto the tube sheet lower face cladding and were full depth expanded in the tube sheet holes. The u-bends are supported by a set of 6 anti-vibration bars, having a maximum of 12 contact points, in the center of the bundle. For shorter tubes near the periphery, a fewer number of anti-vibration bars are present.

One of the major enhancements of the replacement steam generators was the use of Alloy-690 tubing versus Alloy-600 for corrosion resistance. Alloy-690 has lower heat conductivity so, to achieve same power, the heat transfer surface area must be increased by at least 10 percent. This required more tubes to be used in the replacement steam generators. The increased number of tubes resulted in a more tightly compacted tube bundle and elimination of the stay cylinder. The increase in the number of tubes could lead to increases in primary reactor coolant flow through the steam generators. Orifices were installed in the steam generator inlet nozzles to ensure maximum allowed primary system flowrates were not exceeded.

The tube layout indexing or incrementation used in these generators was smaller than other replacement steam generator designs. The tighter indexing results in smaller pitch/diameter ratio in critical regions of the tube bundle u-bends. In addition, it was noted that the anti-vibration bar support structure is not connected to the wrapper for lateral or vertical support; instead the anti-vibration bar system structure is only supported vertically by resting on the tubes.

Other operational and physical comparisons of the replacement steam generators and original steam generators were reviewed by the team and no significant differences were noted.

Additional review by the NRC is required to fully assess the adequacy of Mitsubishi's FIT-III thermal-hydraulic code and then determine whether this issue represents a performance deficiency or constitutes a violation of NRC requirements. This issue is identified as URI 05000362/2012007-08, "Non-Conservative Thermal-Hydraulic Model Results."

8.1 Thermal-hydraulic Assessments

The replacement steam generators thermal hydraulic operation and responses were based on the steam generator design geometric characteristics and operating parameters of the reactor coolant flow and temperature and the secondary feedwater flow and temperature. Calculations were performed for 0 to 100 percent power, beginning-of-life and end-of-life conditions considering limiting tube plugging and fouling. The important actual operating parameters selected for use in the model were saturation pressure, circulation ratio, steam flowrate, tube and shell side pressure drops, water and steam inventories, and global heat transfer coefficient.

Mitsubishi used the SSPC (Steady State Performance Calculation) code to compute these operational parameters, as described in Mitsubishi Document L5-04GA510, "Thermal and Hydraulic Parametric Calculations," Revision 5. The FIT-III code was used to determine thermal-hydraulic fluid flow conditions, with the results described in Mitsubishi Document L5-04GA521, "3D Thermal and Hydraulic Analysis," Revision 3. The FIVATS code was used to compute tube stability ratios that are used to predict tube vibration, with results described in Mitsubishi Document L5-04GA504 "Evaluation of Tube Vibration," Revision 3. In addition, the ABAQUS code was used compute stress and natural vibration frequency, and a code called IVHET was used for tube wear analysis. The key design code for tube bundle design and vibration analysis is thermal-hydraulic code FIT-III since it computes the two key parameters

(fluid velocity and density[1]) that are the primary contributors to the onset of fluid-elastic instability, which indicates the potential for excessive tube vibration.

The Mitsubishi acceptance criteria for vibration was to avoid fluid-elastic instability of tube spans by keeping the calculated stability ratios less than 1. Mitsubishi used the approach given in the ASME code Section III, Division 1, Appendix N-1330, "Flow-Induced Vibration of Tubes and Tube Banks," to calculate stability ratios and they also avoided natural frequencies of the tubes similar to the reactor coolant pump dynamic frequencies.

Design specific flow induced vibration analysis was performed for select U-bend tubes exposed to the greatest vibration risk, generally those with longest unsupported length under most limiting operating condition (lowest steam pressure, end of life design conditions). The phenomenon of fluid-elastic instability of tubes is characterized by cross-flow velocity (for out-of-plane mode) and normal velocity (for in-plane mode) where the local velocities exceed a critical velocity value (given via Conners' Equation[2]). The parameter of local velocity divided by critical velocity is referred to as stability ratio. The accuracy of calculating fluid-elastic instability is limited based on inputs that are best determined by design-specific mockup test data. Mitsubishi did not perform design-specific mockup tests, but used generally accepted test data, and other data based on Mitsubishi test rigs that were not specific to the SONGS replacement steam generator design.

If operating velocities reach this critical value, vibration amplitudes can increase rapidly and fluid-elastic instability forces can lead to rapid pulsation and damaging of tubes. The U-bend region is most susceptible because (1) the local fluid has a higher void fraction[3], with high velocities; (2) the fluid flow is in a direction normal to the tube, and (3) the anti-vibration bars are limited in their dampening capability along the plane of the tubes. Traditional design of anti-vibration bar systems have not considered in-plane fluid forces since it was accepted that the rigidity and dampening strength of the tube in this direction was adequate to preclude it. This event at SONGS is the first US operating fleet experience of in-plane fluid-elastic instability, sufficient to cause tube-to-tube contact and wear in the U-bend region.

The team noted that Design Specification SO23-617-1, "Conformed Specification for Design and Fabrication of Replacement Steam Generators for Unit 2 and Unit 3," Revision 4, did not address specific criteria for stability ratio and does not mention fluid-elastic instability. The team did find that the Mitsubishi calculated design values for stability ratios did not exceed 0.5. It is important to note, that each steam generator manufacturer has different design values for maximum stability ratios; therefore there is no standard value. The smaller that the design stability ratio is (has to be less than 1), the more margin to fluid-elastic instability.

---

[1] Void fractions and density are inversely proportional.

[2] Fluidelastic Vibration of Heat Exchanger Tube Arrays, Journal of Mechanical design – Volume 100 – April 1978, H.J. Connors, JR.

[3] Void fractions and density are inversely proportional.

Mitsubishi computed the flow-induced vibration status of the steam generators in Document L5-04GA504, "Evaluation of Tube Vibration," Revision 3. The critical flow velocity, Uc, was obtained using the Connors' Equation based on output fluid velocities and densities from their FIT-III thermal-hydraulic model. The critical flow velocity is then calculated based on damping ratio, tube mass, tube outside diameter, averaged local cross flow gap velocity, and fluid density per selected tube. The method is based on formulations given in the ASME code Section III, Division 1, Appendix N-1330, "Fluid Elastic Instability". The ratio of normal-to-tube cross flow gap velocity to this critical velocity defines the "stability ratio".

Steam generator vendors must develop specific methods based on the thermal-hydraulic code selected and experimental data used to determine coefficients in the Conners' Equation for their particular steam generator design. The experimental data used justify the methods can be developed from in-house tests or taken from published industry data. Mitsubishi indicated that in their methodology two conservatisms were used in their bundle vibration analysis: (1) FIT-III gap velocities were averaged and multiplied by 1.5 and (2) one of 12 anti-vibration bars contacts were assumed to be inactive. The team noted that in Mitsubishi Document L5-04GA504, "Evaluation of Tube Vibration," Revision 3, the 1.5 multiplier was not an added conservatism but a requirement, needed to match test data results.

The team developed an independent model of the new steam generators using the ATHOS thermal hydraulic code[4]. The calculations were intended to assess operating cycle differences between Units 2 and 3 steam generators and review thermal hydraulic phenomena within the steam generators in order to investigate key parameters and causal factors for the excessive tube wear rates. The NRC ATHOS calculations determined that the differences in primary inlet temperature and steam flow between the units were negligible. NRC ATHOS results indicated high void fractions and high u-bend gap velocities existed in the bundle as compared to Mitsubishi FIT-III analyses used for design.

Mitsubishi provided a comparison of their ATHOS model to their FIT-III model results. The Mitsubishi ATHOS model fluid velocities were 2.5 to 3 times higher than the FIT-III model velocities with the 1.5 multiplier applied. Other independent code calculations, including an analysis by Westinghouse using their in-house modified version of ATHOS and an analysis by AREVA using their French code CAFCA4 showed similar thermal-hydraulic results (up to 4 times higher velocities than FIT-III) as those computed in the Mitsubishi ATHOS results and the NRC independent ATHOS calculations. Based on these comparisons, it was concluded that the FIT-III code and model results used for design were non-conservative even with the multiplier applied.

Most of the experimental work in fluid-elastic instability has been carried out for two-phase flow, with an air-water medium. Accepted industry data, as presented by the Mitsubishi, shows that in staggered array bundles (triangular pitch, pitch/diameter

---

[4] ATHOS3/SGAP Version 3.0-S: A Computer Program for Thermal-Hydraulic Analysis of Steam Generators, February 2005 **(need to verify this is the version that the NRC has a license for use. Did Carl re-run the ATHOS model using newest version and did it change our results?)**

=1.33), the onset of tube instability for modern steam generators, such as SONGS steam generators, can start at tube gap velocities above 6 meter/sec (pending effectiveness of the dampening structure) (please add reference for this statement). The NRC ATHOS model results indicated that there was a substantial localized region in the lower hot side of the u-bends where velocities exceeded 6 m/sec.

The NRC ATHOS calculations were compared to gap velocities computed both with the Mitsubishi ATHOS and the FIT-III models. Since tube R142C88 was the only one common for each of the analyses, it can be used as basis for comparison. The effective peak velocities were as follows:

- NRC ATHOS – 5.2 m/sec
- Mitsubishi ATHOS – 5.6 m/sec
- Mitsubishi FIT-III – 2.5 m/sec

Both the NRC and Mitsubishi ATHOS results were reasonably consistent and strongly suggested that high velocities coupled with high void fraction were primary causal factors in the tube fluid-elastic instability and the excessive wear patterns observed in the Unit 3 steam generators.

The team reviewed the verification and validation of both the Mitsubishi FIT-III thermal-hydraulic and FIVATS tube vibration models as stated in Specification SO23-617-1, Revision 4. The specification required Mitsubishi to design and build the steam generators in accordance with ASME NQA-1, "Quality Assurance Requirements for Nuclear Facility Applications," 1994, Subpart 2.7 "Computer Software" and Mitsubishi's quality assurance program.

The team reviewed Mitsubishi's verification and validation Report KAS-20050201, "FIT-III Code Validation Report," Revision 2. The report concluded the FIT-III code was valid for prediction of velocity and density behavior of two-phase flow under nominal conditions for the secondary side of PWR steam generators.

The team reviewed Mitsubishi's verification and validation Report KAS-20040253, "FIVATS Code Validation and Qualification Report," Revision 3. The FIVATS model was designed to calculate the stability ratios by using the flow velocity and density distributions from the FIT-III model. The FIVATS model primarily used the Conners' Equation, and validation was performed mainly by comparison to hand calculation; however, Mitsubishi used a mock-up test facility with a simple anti-vibration bar structure as part of their validation effort. The report concluded that adequate validation and qualification was performed to show compliance to software requirements and that the code could predict flow-induced vibration.

The team requested additional information as part of the verification and validation of the FIT-III thermal-hydraulic model. Mitsubishi provided several additional reports. One of the reports showed benchmarking comparisons to a French test facility program called CLOTAIRE in 1986. Another report conducted in 2002, showed comparisons between FIT-III and ATHOS, and concluded that both codes had good correlation with the CLOTAIRE experimental data. Because of the limited

information provided, the team could not determine the validity of the benchmarking of FIT-III.

Overall, the team determined that the validation and verification of the FIT-III code did not present overwhelming evidence that this code has been adequately benchmarked. The team did not find any problems with the validation of the FIVATS code.

8.2 NRC ATHOS Results

Figures 1 through 4 (different view angles of same results) show results, with low $T_{hot}$ and low steam pressure and present a 3D isometric encapsulation of steam qualities (red scale) at and above 0.9 (i.e., void fraction > 0.99) and field velocities at and above 6.0 m/sec (white scale).

The ATHOS model results of high steam quality and steam velocity closely align with the area of concern (tube-to-tube wear) in the Unit 3 replacement steam generators. In Figure 5, the code predicted regions of high void fraction and high steam velocities (vertically located z-axis cut at about 20 inches above the 7$^{th}$ TSP) are superimposed with tube-to-tube wear indications from Unit 3 steam generator 3E0-88.

The tube-to-tube wear indications align with anti-vibration bar wear indication trends; however, the anti-vibration bar wear patterns appear to indicate a more square-like, essentially rectangular behavior that suggests that there may also be a mechanical, fabrication, assembly, and/or material contribution to the tube-to-tube wear degradation.

**Figure 1**

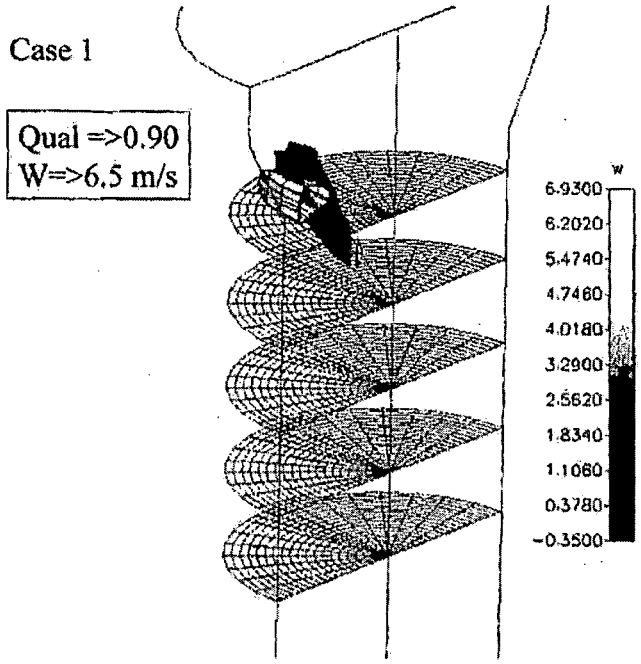


**Figure 2**

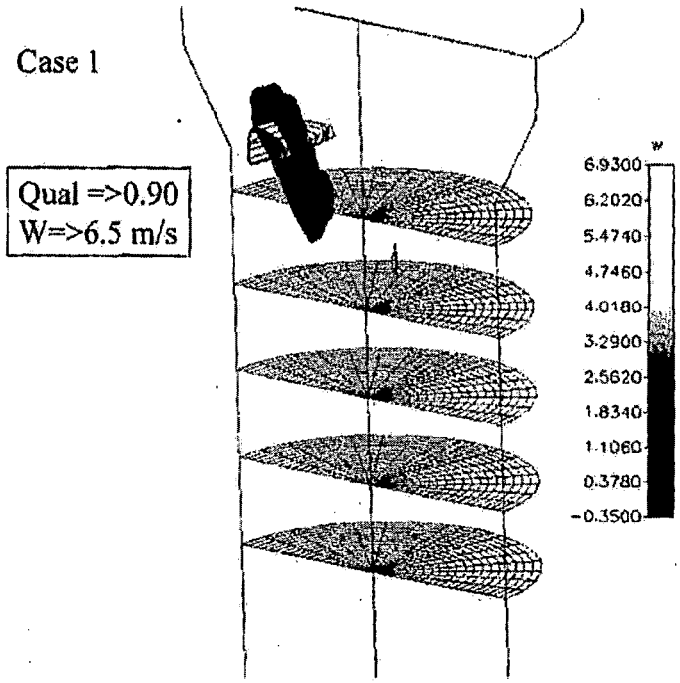

**Figure 3**

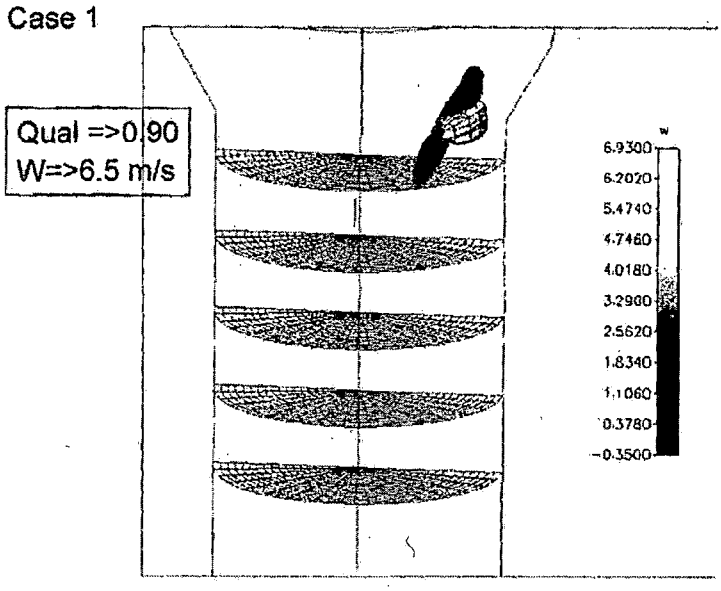


**Figure 4**

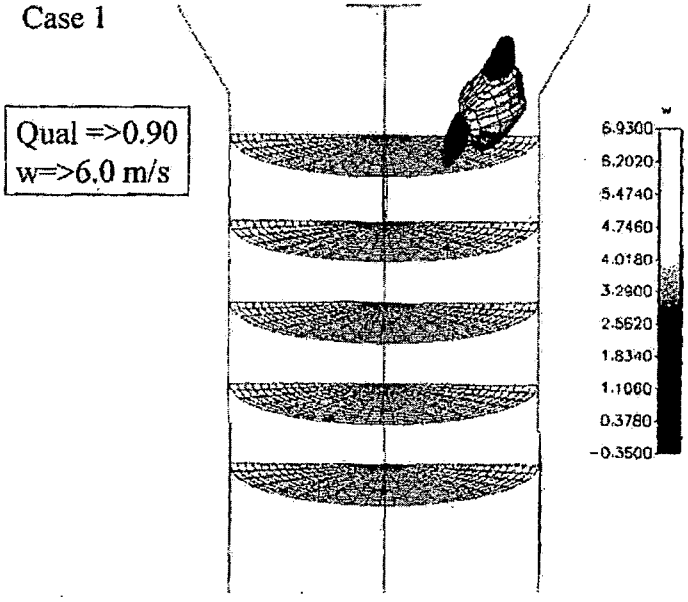

**Figure 5**

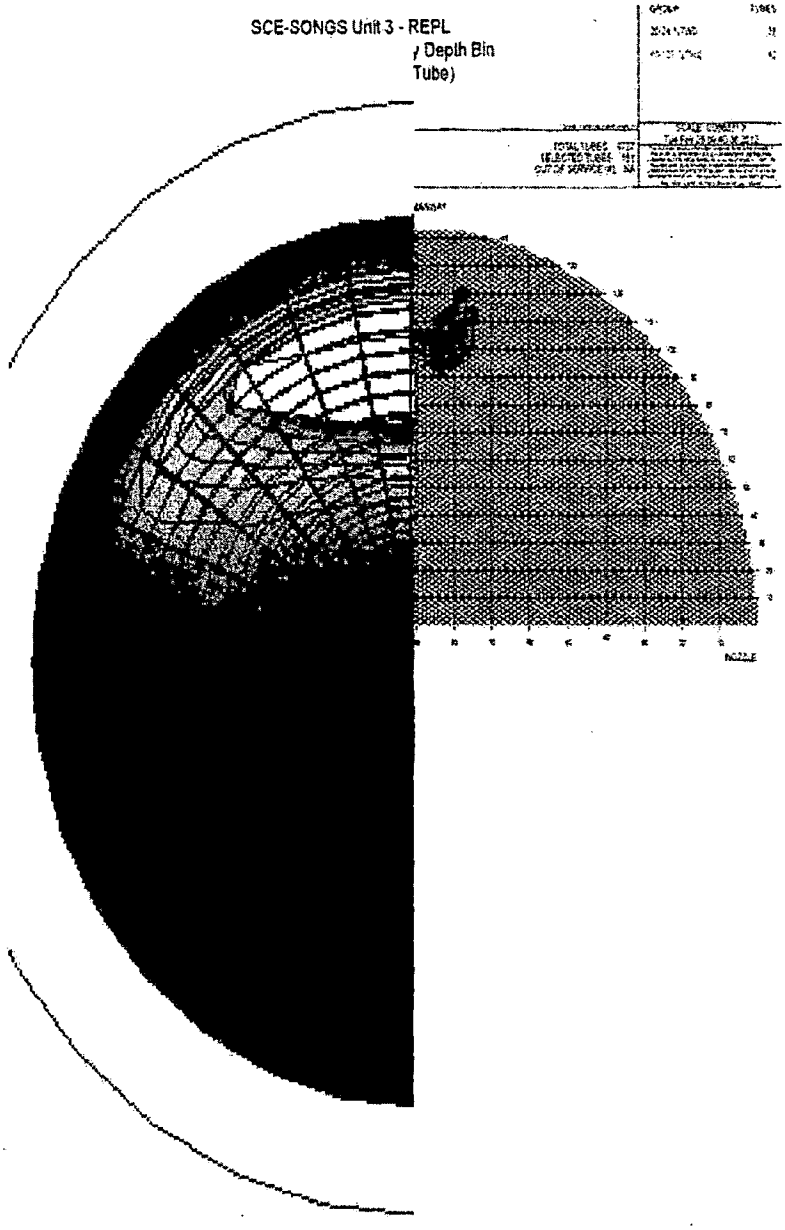


The NRC analysis indicated a correlation with the tube-to-tube wear based on a combination of high void fraction and high steam velocities. It should be noted that

the traditional forcing function, fluid velocity squared times density, does not show good agreement with the tube-to-tube wear patterns. This indicated that the high quality steam fluid velocities and high void fraction may be sufficiently high to cause conditions in the generators conducive for onset of fluid-elastic instability.

The above analyses apply equally to Units 2 and 3, so it does not explain why the accelerated fluid-elastic instability wear damage was significantly greater in Unit 3 steam generators. The ATHOS thermal-hydraulic model predicts bulk fluid behavior based on first principals and empirical correlations and as a result it is not able to evaluate mechanical, fabrication, or structural material differences or other phenomena that may be unique to each steam generator. Therefore this analysis cannot account for these mechanical factors and differences which could very likely also be contributing to the tube degradation.

8.3 Conclusion

Based on independent NRC thermal-hydraulic analysis, the team concluded that the SONGS replacement steam generators were not designed with adequate margin to preclude the onset of fluid-elastic instability. Therefore unless changes are made to the operation or configuration of the steam generators, high fluid velocities and high void fractions in localized regions in the u-bend will continue to cause excessive tube wear and accelerated wear that could result in tube leakage and/or tube rupture. The deficiencies appear to be related to Mitsubishi's FIT-III thermal hydraulic code having predicted non-conservative low velocity results and low void fractions. These results lead Mitsubishi to conclude that margins to instability were significantly larger than they actually are. This assessment is based on eddy current data, NRC ATHOS analysis, Mitsubishi ATHOS analysis, and other thermal-hydraulic analyses completed by Westinghouse and AREVA that all identified significantly higher fluid velocities and void fractions than FIT-III.

Based on the cause evaluation and corrective action plan, SCE determined that the best solution to prevent tube-to-tube wear was to conservatively plug and stabilize the affected areas. By taking the impacted tubes out-of-service, SCE determined that this should reduce the potential for localized fluid velocities reaching critical velocity. In addition, in order to ensure sufficient margin to preclude the onset of fluid-elastic instability, SCE determined that reactor power would also have to be reduced. At this time SCE is still developing additional corrective actions to prevent tube-to-tube wear. The actions have not been finalized and no determination has been made concerning the appropriate power level. The NRC has not made any conclusions on the proposed corrective actions. Once the corrective actions have been finalized, they will be reviewed and evaluated as part of the Confirmatory Action Letter followup inspection.

9.0 Risk Assessment (Charter Item 9)

a. Inspection Scope

The team reviewed the steam generator tube leak and failures of multiple steam generator tubes during in-situ pressure testing to support an assessment of the risk of the degraded steam generator tubes during various accident conditions, including a main steam line break accident.

b. Observations and Findings

No findings were identified.

An NRC senior reactor analyst is currently working with SCE risk assessment personnel to determine the risk associated with the loss of tube integrity for multiple tubes.

10.0 Assess Quality Assurance, Radiological Controls, and Safety Culture Components (Charter Item 10)

a. Inspection Scope

The team reviewed the event, operator actions, management decisions, steam generator eddy current examinations, in-situ pressure testing, and tube plugging and stabilization activities to determine whether issues related to quality assurance, radiological controls, or safety culture existed.

b. Observations and Findings

No findings were identified.

Region IV radiation protection inspectors reviewed the estimated offsite radiation exposure from the actual steam generator tube leak on Unit 3 steam generator 3E0-88 that occurred on January 31, 2012, including the potential dose consequence to site workers and members of the public. The licensee determined that the Unit 3 steam generator tube leak resulted in a release of gaseous effluents into the public domain, and the primary radionuclides released were argon-41, xenon-133, and xenon-135. The release resulted in an estimated 0.0000452 (4.52 E-5) mrem dose to the public. Inspectors also reviewed design drawings and radiation monitor data, performed plants tours, and confirmed the licensee's use of the offsite dose calculation methodology. The inspectors concluded that the Unit 3 steam generator tube leak was detected by the condenser steam jet air ejector radiation monitor 3RT-7820 as per design. In addition, the radiation monitor 3RT-7820 alarmed and alerted SONGS operators of the steam generator tube leak as required.

11.0 Operational impacts from Unit 3 to Unit 2 (Charter Item 11)

a. Inspection Scope

As follow-on of the previous sections, the team reviewed collections of the Mitsubishi documents and presentations, licensee documents and presentations, and NRC independent analysis and assessments to consider the operational impact on Unit 2 based on analysis and data, including eddy current results, regarding the as-found condition of Unit 3. The team compared key observations and overall differences in operational parameters that are common to both units that could affect and possibly limit Unit 2 operation. The team focused on differences in fabrication, manufacturing, operation, and eddy current data results between Units 2 and 3 steam generators.

b. Observations and Findings

No findings were identified.

Based on the review of current Cycle 16 operating data and independent NRC analysis it does not appear that there were any major difference in the thermal hydraulic phenomena at normal full power operation. Since generator physical dimensions and design are identical, the operational parameters are basically the same between the Unit 2 and 3 steam generators; therefore, the hydraulic forcing function that caused tube-to-tube wear and accelerated anti-vibration bar and tube support plate wear should also be same. The initial inspections of the Unit 2 steam generators did not indicate significant wear except at the retainer bars (different mechanism caused this wear). However, subsequent follow up inspections in Unit 2 with a more sensitive probe confirmed the existence of minor tube-to-tube wear in two neighboring tubes but in one of the steam generators. The tube-to-tube wear that was found in Unit 2 was in a similar location as that found in both of the Unit 3 steam generators.

The phenomenon of fluid elastic instability is a function primarily of two criteria: the fluid velocity forces and the damping capability of the support structure (i.e., the tube support plates, the tubesheet, and the anti-vibration bars). Therefore, if it is determined that the thermal hydraulic forces in the bundle are the same, it can be concluded that the damping forces between the Unit 2 and Unit 3 replacement steam generators must be different. Mitsubishi performed several studies that indicated that gap contact forces in the anti-vibration bars were greater in Unit 2 than in Unit 3. However, with the exception of manufacturing data that shows slight differences, there is not currently a method available to measure the clearances between the anti-vibration bars and the tubes; however, SCE is currently working with AREVA to develop a method to take these measurements.

The tube damage found in Unit 3 is markedly more severe than Unit 2, especially considering that Unit 3 operated only about half the amount of time as Unit 2. This suggests that there is indeed a sizeable difference in the damping capability of the unit steam generators.

There are generally two options to arrest localized damaging thermal hydraulic phenomena in steam generators. The first and preferred option is to plug tubes in the

affected area. The collective plugging tends to relocate and reduce high fluid velocities and void fractions, and has on previous occasions in industry been successful. However, if plugging selected tubes does not provide significant margins adequate to arrest the damage mechanism, thermal hydraulic conditions can be reduced through a reduction in power. Reducing power has several beneficial effects including (1) tends to increase steam pressure, (2) reduces high steam fluid velocities and high void fraction in the bundle, and (3) improves damping. Currently, SCE is still reviewing and developing additional corrective actions to preclude fluid-elastic instability. The NRC has been observing some of the mockup testing being used to qualify additional repair activities.

12.0 Mitsubishi Divider Plate Manufacturing and Weld Issues (Mitsubishi Charter Item 2)

a. Inspection Scope

On March 18, 2009, Mitsubishi identified cracking indications in the weld between the divider plate and the channel head of Unit 3 replacement steam generator 3E0-88 (see figure below), after completion of the ASME Section III hydrostatic test on the secondary side. The extent of condition investigation also identified similar cracking indications in Unit 3 replacement steam generator 3E0-89. As discussed in Section 4 of this report, the cause of the cracking was attributed to the air carbon-arc gouging process used to remove the clad weld from the channel head. The team reviewed information associated with the repair of the cracking indications to assess whether the repair activities resulted in relevant differences in design and fabrication that could be considered as contributing factors for the cause of the tube-to-tube wear issue in Unit 3.

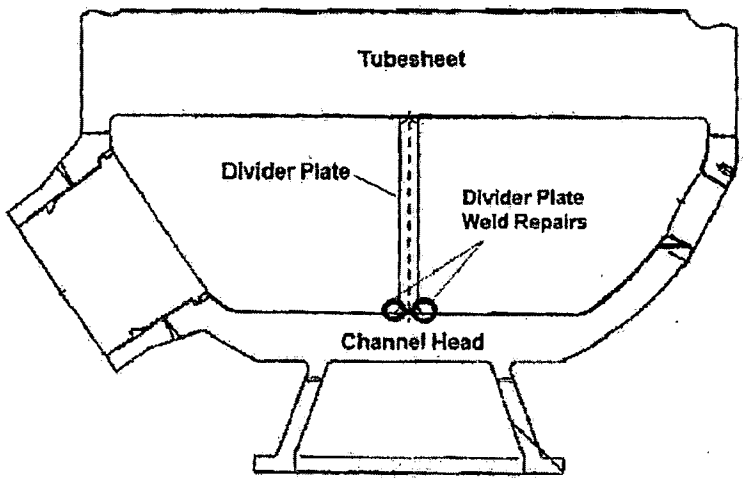


Location of Divider Plate Weld Repairs in Unit 3 Steam Generators (For Illustration Purposes Only)

b. Observations and Findings

No findings were identified.

The team identified an unresolved item for which additional information is required to determine if a performance deficiency exists or if the issue constitutes violation of NRC requirements. The team also identified several observations related to the divider plate weld repairs in Unit 3 replacement steam generators.

1) Introduction: The team identified an Unresolved Item associated with the adequacy of evaluation and controls for the divider plate weld repairs.

Description: The cracking of the divider plate weld in both Unit 3 replacement steam generators required extensive repairs affecting the channel head, divider plate, and tubesheet. Based on interviews with licensee personnel and the review of documentation for the repairs, the team determined that Mitsubishi did not perform a comprehensive evaluation to assess the impact of the divider plate repairs on the integrity of the tube bundle. The team determined that the areas listed below were not considered or evaluated in sufficient depth to identify the potential adverse effects of the planned weld repairs.

- Additional Rotations – The repair activities for the Unit 3 steam generators required additional rotations of the steam generator assembly while these were oriented in the horizontal position. The repairs resulted in approximately 300 additional rotations in each steam generator, which could have affected the configuration of the tube bundle in terms of anti-vibration bar gaps or distortion. The team identified that Mitsubishi did not fully evaluate the impact of additional rotations on the configuration of the steam generators since rotation was considered a normal evolution in the fabrication process.

- Heat Input – The repair process included extensive heat-adding activities such as grinding, flame cutting, and post-weld heat treatment. While these activities were performed in accordance with the construction code of record and an approved repair plan, they could have resulted in thermal expansion and unintended distortion of steam generator components. For example, the channel heads were removed using flame cutting and Mitsubishi's evaluation for the impact of this activity was limited to the base material area in the vicinity of the cut, i.e. the heat affected zone. Mitsubishi did not fully assess the impact this activity could have on the overall configuration of the steam generator in terms of thermal expansion of the tubesheet or distortion.

- Dimensional Checks after Repair – The team identified that Mitsubishi did not perform dimensional verifications (e.g. clearances) of the tube bundle or other secondary side dimensions after the repairs of the Unit 3 steam generators to confirm that critical dimensions were not affected by the repairs.

Additional review by the NRC is required following completion of the licensee's cause evaluation to fully assess how the repair activities affected the Unit 3 replacement

steam generators and then determine whether this issue represents a performance deficiency or constitutes a violation of NRC requirements. This issue is identified as URI 05000362/2012007-09, "Evaluation of the Effects of Divider Plate Weld Repairs in Unit 3 Replacement Steam Generators."

2) Repair Plan: The team noted that Mitsubishi developed a specific plan to conduct the repair of the divider plate weld in both Unit 3 replacement steam generators. The repair plan adequately described the major repair steps and the required implementing procedures. For some of the repair stages, the licensee developed new procedures to prescribe activities outside the normal fabrication sequence. The repair plan consisted of the following major steps:

   - Cutting off the divider plate from the tubesheet by grinding
   - Cutting off the channel head from the tubesheet by flame cutting
   - Cutting the divider plate from the channel head by grinding
   - Removal of the heat affected zone of the channel head bowl edge due to flame cutting
   - Application of weld buildup and post-weld heat treatment on the channel head bowl edge
   - Application of low alloy steel buildup and Alloy 690 butter on the bottom of the channel head for divider plate welding, including required post-weld heat treatment
   - Application of Alloy 690 buildup on the divider plate, including required post-weld heat treatment
   - Welding divider plate to channel head
   - Welding the divider plate to the tubesheet
   - Welding the channel head to the tubesheet
   - Primary side hydrostatic test

3) Differences between Replacement Steam Generators: The team identified the notable differences listed below between Unit 2 and Unit 3 replacement steam generators as a result of the divider plate weld repair activities.

   - Material Class for the Tubesheets – The tubesheet material for both Unit 3 replacement steam generators was reclassified to facilitate the additional post-weld heat treatment required for the repair of the divider plate welds. The tubesheet manufacturer originally certified that the tubesheet material met the requirements of ASME specification SA-508/Grade 3/Class 2, with a post-weld heat treatment time of approximately 15 hours. The repair activities in Unit 3 required additional post-weld heat treatment, which was expected to affect the properties of the tubesheet material to the extent that the mechanical properties would not meet the requirements for SA-508/Grade 3/Class 2 material. Mitsubishi performed mechanical testing on a specimen fabricated from the archive samples that was exposed to 30 hours of post-weld heat treatment and the tests showed that the tubesheet material's tensile strength did not meet the ASME specifications for SA-508/Grade 3/Class 2 material. Mitsubishi performed

a reconciliation review to reclassify the material to SA-508/Grade 3/Class 1, which has a lower tensile strength. The reconciliation included an evaluation of resulting stresses on the tubesheet under design, upset, emergency, faulted, and test conditions using the material properties for SA-508/Class 1 material. The evaluation resulted in acceptable stresses based on the stress limits imposed by the construction code of record. This issue was evaluated by Mitsubishi in the non-conformance report process and Supplier Deviation Request SDR-086 10041870-09086 was submitted to the licensee for review and approval. The licensee approved the reclassification of the tubesheet material.

- Minimum Thickness of the Channel Head Base Metal – The channel heads of both Unit 3 steam generators were removed by flame cutting to facilitate the divider plate weld repairs. The removal and final welding of the channel head resulted in a reduction of the minimum wall thickness of the channel head base metal. The minimum base metal thickness was reduced by 1.18-inches. Mitsubishi evaluated this change in the "Design Report for the Channel Head Region." The reduction in minimum wall thickness was addressed through a reconciliation of stress ratios based on the stress limits imposed by the construction code of record. The analysis demonstrated the structural adequacy of the channel head, primary inlet nozzle, primary outlet nozzle, primary manway, support skirt, and the stud bolts of the primary manway.

- Number of Bolts in the Divider Plate Patch Plates – The original design of the replacement steam generators included a patch plate held in place at the upper corners of the divider plate by three bolts. As a result of the divider plate-to-tubesheet weld removal to support the repair activities, the Unit 3 divider plate patch plates were modified to be held by two bolts instead of the three bolts specified in the original design. Mitsubishi submitted this design change to the licensee for review and approval. Licensee personnel approved the design change as requested.

- Weld Buildup on Channel Head Surfaces – Since the repair of the divider plate welds in Unit 3 steam generators required cutting of the channel head, weld buildup had to be applied on the affected surfaces in order to restore the dimensions to design specifications. Mitsubishi submitted this design change to the licensee for review and approval. Licensee personnel approved the design change as requested.

- Post Weld Heat Treatment – The tubesheet-to-channel head weld area experienced a total of two post-weld heat treatments. Both Unit 3 replacement steam generators received an additional local post-weld heat treatment at approximately 1103 F for approximately 3.5 hrs. Mitsubishi submitted this fabrication process change to the licensee for review and approval. Licensee personnel approved the design change as requested.

- Total of Rotations during Fabrication – The total number of rotations on each steam generator varied as a result of the hydrostatic test results and the repairs on the divider plate welds.

| Steam Generator | Initial Rotations | Additional Rotations for Divider Plate Repairs | Total Rotations |
|---|---|---|---|
| Unit 2 E0-89 | 520 | 0 | 520 |
| Unit 2 E0-88 | 510 | 0 | 510 |
| Unit 3 E0-89 | 470 | 340 | 810 |
| Unit 3 E0-88 | 440 | 320 | 760 |

13.0 Office of Nuclear Reactor Regulation (NRR) Review of SONGS 50.59 Evaluation

a. Inspection Scope

The NRR technical specialist reviewed all of the design changes associated with the replacement steam generators to determine whether the changes to the facility or procedures, as described in the Updated Final Safety Analysis Report, had been reviewed and documented in accordance with 10 CFR 50.59 requirements. The technical specialist reviewed the various information used by SCE to review the changes being made to the replacement steam generators, including calculations, analyses, design change documentation, procedures, the Updated Final Safety Analysis Report, the Technical Specifications, and plant drawings. The evaluation process used by the technical specialist included determining if the design changes to the replacement steam generators were a change to the facility or procedures as described in the Updated Final Safety Analysis Report or a test or experiment not described in the Updated Final Safety Analysis Report. The technical specialist also verified that safety issues related to the changes were resolved. The technical specialist compared the safety evaluations and supporting documents to the guidance and methods provided in Nuclear Energy Institute (NEI) 96-07, "Guidelines for 10 CFR 50.59 Implementation," Revision 1, as endorsed by NRC Regulatory Guide 1.187, "Guidance for Implementation of 10 CFR 50.59, Changes, Tests, and Experiments," to determine the adequacy of the 10 CFR 50.59 evaluations.

b. Observations and Findings

No findings were identified

The NRR technical specialist identified one unresolved item for which additional information is required to determine if performance deficiencies exist or if the issues constitute violations of NRC requirements.

(1) Introduction: The NRR technical specialist reviewed SCE's 10 CFR 50.59 evaluation contained in Engineering Change Packages 800071702 and 800071703 for the Unit 2 and Unit 3 replacement steam generators, respectively, in which SCE determined that the impact of the replacement steam generators on the current licensing basis

and any need for NRC approval as required by 10 CFR 50.59.

(2) Description: The NRR technical specialist reviewed the SCE's 10 CFR 50.59 evaluation against 10 CFR 50.59(c)(2)(viii) which requires that licensees obtain a license amendment pursuant to 10 CFR 50.90 prior to implementing a proposed change if the change would result in a departure from a method of evaluation described in the FSAR (as updated) used in establishing the design bases or in the safety analyses. Industry guidance NEI 96-07, Revision 1, Section 3.10, "Methods of Evaluation," states, "Definition: Methods of evaluation means the calculational framework used for evaluating behavior or response of the facility or structures, systems, and components." Regulation 10 CFR 50.59 a(2), states, "*Departure from a method of evaluation described in the FSAR (as updated) used in establishing the design bases or in the safety analyses* means (i) changing any of the elements of the method described in the FSAR (as updated) unless the results of the analysis are conservative or essentially the same; or (ii) changing from a method described in the FSAR to another method unless that method has been approved by NRC for the intended application." Regulation 10 CFR 50.59(d)(1) requires that the licensee maintain records of changes in the facility that "includes a written evaluation which provides the bases for the determination that the change, test, or experiment does not require a license amendment... ." The technical specialist evaluated SCE's bases for determining that the changes would not result in the departure from the method of evaluation used in establishing the design bases or in the safety analyses. Specifically, the technical specialist evaluated whether the changes involved:

(a) changing of any of the elements of the method described in the Updated Final Safety Analysis Report, which consistent with 10 CFR 50.59 a(2)(i) would be justified by demonstrating that the results of the analysis are conservative or essentially the same; or

(b) changing from a method described in the Updated Final Safety Analysis Report to another method, which consistent with 10 CFR 50.59 a(2)(ii) would be justified by demonstrating that method has been approved by NRC for the intended application.

The NRR technical specialist reviewed SCE's 10 CFR 50.59 evaluation and found two instances that failed to adequately address whether the change involved a departure of the method of evaluation described in the Updated Final Safety Analysis Report.

(a) Use of ABAQUS instead of ANSYS: Updated Final Safety Analysis Report Sections 3.9.1.2.2.1.11 and 3.9.1.2.2.2.3 were revised to reflect that the SONGS Unit 2 and 3 original steam generators stress analyses for reactor coolant system structural integrity utilized the ANSYS computer program, whereas the replacement steam generators analyses utilized the ABAQUS computer program. The SCE's 50.59 evaluation incorrectly determined that using the ABAQUS instead of ANSYS was a change to an element of the method described in the Updated Final Safety Analysis Report did not constitute changing from a method described in the Updated Final Safety Analysis Report to another method, and as such, did not mention whether ABAQUS has been

approved by the NRC for this application.

(b) Use of ANSYS instead of STRUDL and ANSYS: Updated Final Safety Analysis Report Section 5.4.2.3.1.3 was revised to reflect that the SONGS Unit 2 and 3 evaluation of tube stress under loss of coolant accident conditions for the original steam generators consisted of a two-step process utilizing the STRUDL and ANSYS computer programs to calculate displacement histories and tube stresses, respectively, while the corresponding replacement steam generators analysis determined tube stresses from blowdown forces using only the ANSYS computer program. While SCE's 50.59 evaluation correctly considered this a change from a method described in the FSAR to another method, the 50.59 evaluation did not mention whether the method has been approved by NRC for this application.

Additional review and followup will be required to review the departure of the method of evaluation used during the stress analysis calculations associated with the replacement steam generators and then determine whether this issue represents a performance deficiency or constitutes a violation of NRC requirements. This issue is identified as URI 05000362/2012007-10, "Evaluation of Departure of Method of Evaluation for 10 CFR 50.59 Processes."

14.0 Exit Meeting Summary

On June 18, 2012, the NRC held a public meeting and presented the inspection results to Mr. P. Dietrich, Senior Vice President and Chief Nuclear Officer, and other members of the staff, who acknowledged the findings. Proprietary information was provided to the team and all proprietary information was returned to SCE.

**SUPPLEMENTAL INFORMATION**
**KEY POINTS OF CONTACT**

Licensee Personnel

P. Dietrich, Senior Vice President and Chief Nuclear Officer
R. Litzinger, President, SCE
D. Bauder, Vice President and Station Manager
T. Palmisano, Vice President of Engineering, Projects and Site Support
T. McCool, Plant Manager
T. Yackle, Assistant Plant Manager
D. Yarbrough, Director of Operations
R. Corbett, Director of Performance Improvement
O. Flores, Director of Nuclear Oversight
R. St Onge, Director of Nuclear Regulatory Affairs
B. Winn, Director of Nuclear Financial Management
E. Avella, Director of Project Management
M. Coveney, Director of Nuclear Leadership
M. Stevens, Title needed, Nuclear Regulatory Affairs
C. Cates, Nuclear Safety Culture and Site Recovery Manager
M. Malzahn, Project Management Engineer
C. Harberts, Steam Generator Replacement Project Manager
M. Mihalik, Senior Engineer, Project Management Organization
R. McWey, Nuclear Oversight Manager
M. Pawlaczyk, Nuclear Regulatory Affairs Technical Specialist
J. Peattie, Maintenance Manager
R. Treadway, Nuclear Regulatory Affairs Manager
B. Olech, Consulting Engineer, Edison
D. Brabec, Project Manager Steam Generator Recovery Program
D. Calhoun, Senior Engineer, Design Engineering Organization, Edison

Mitsubishi Personnel

H. Kaguchi, Mitsubishi Heavy Industries, Director, Component Designing Department
I. Otake, Mitsubishi Heavy Industries, Deputy Chief Engineer, Quality Assurance Department
T. Tsuruta, Mitsubishi Heavy Industries, Engineer, Quality Assurance Department
T. Inoue, Mitsubishi Heavy Industries, Deputy Director, Plant Designing Department
H. Hirano, Mitsubishi Heavy Industries, Project Manager, Overseas Project, Component Designing Department
R. Bywater, Mitsubishi Nuclear Energy Systems, COLA Licensing Manager
F. Gillespie,
R. Godley,

Other Contractor Personnel

R. Walker, MPR Consultant
M. Short, Consultant

Bruce ?, Areva, TITLE NEEDED
??, ATHOS Engineer, NAME AND TITLE NEEDED

Comm
contra

NRC Personnel
T. Blount, Deputy Division Director, Division of Reactor Safety
R. Lantz, Branch Chief, Projects Branch D

## LIST OF ITEMS OPENED, CLOSED AND DISCUSSED

Opened

| | | |
|---|---|---|
| 05000362/2012007-01 | URI | Adequacy of the Trip/Transient and Event Review Procedure (Section 1) |
| 05000362/2012007-02 | URI | Evaluation of Unit 3 Vibration and Loose Parts Monitoring System Alarms (Section 3) |
| 05000362/2012007-03 | URI | Evaluation of Retainer Bars Vibration during the Original Design of the Replacement Steam Generators (Section 4 |
| 05000362/2012007-04 | URI | Evaluation of Changes in Dimensional Controls during the Fabrication of Unit 2 and Unit 3 Replacement Steam Generators (Section 4) |
| 05000362/2012007-05 | URI | Shipping Requirements not in Accordance with Industry Standards (Section 7) |
| 05000362/2012007-06 | URI | Shipping Requirements not in Accordance with Design and Fabrication Specifications (Section 7) |
| 05000362/2012007-07 | URI | Unit 3 Steam Generator E088 Stresses Related to Handling (Section 7) |
| 05000362/2012007-08 | URI | Non-Conservative Thermal-Hydraulic Model Results (Section 8) |
| 05000362/2012007-09 | URI | Evaluation of the Effects of Divider Plate Weld Repairs in Unit 3 Replacement Steam Generators (Section 12) |
| 05000362/2012007-10 | URI | Evaluation of Departure of Method of Evaluation for 10 CFR 50.59 Processes (Section 13) |

Closed

None

Discussed

None

## LIST OF DOCUMENTS REVIEWED

AUDITS/SELF-ASSESSMENTS/QUALITY CONTROL DRAWINGS

SONGS DOCUMENTS

| Number | Title | Revision/Date |
|---|---|---|
| MHI-1-06 | Southern California Audit of Mitsubishi Heavy Industries | June 16, 2006 |
| MHI-1-09 | Southern California Audit of Mitsubishi Heavy Industries | April 27, 2009 |
| MHI-2-04 | Southern California Audit of Mitsubishi Heavy Industries | December 14, 2004 |
| SCES-007-10 | Procurement and Material Control Program Audit | September 14, 2010 |
| MHI-01-04 | Evaluation and Review of Contractor, Consultant, Utility or Licensee Audit Report | September 24, 2004 |
| | Status of Southern California Edison (SCE) Corrective Action Request (CAR) Nos. S-1918 and S-1932 Closure | March 23, 2007 |
| | Southern California Edison (SCE) Corrective Action Request (CAR) No. S-1991, Supplier Stop Work Order (SSWO) No. SSWO-001-08 | 1 |
| SO123-XV-50 | Corrective Action Program | 25 |
| | RSG-SCE/MHI-06-2233 – Southern California Edison (SCE) Corrective Action Request (CAR) No. S-1882 Closure | May 3, 2006 |
| | RSG-SCE/MHI-06-1916 - Southern California Edison (SCE) Corrective Action Request, (CAR) No. S-1906 Closure | February 22, 2006 |

| Number | Title | Revision/Date |
|---|---|---|
| | Southern California Edison (SCE) Audit No. MHI-1-06 and Corrective Action Request (CAR) Nos. S-1915, S-1916, S-1917, and S-1918 | January 31, 2008 |
| AR# 040901345 | Qualification Letter | September 24, 2004 |
| AR#050301458 | Qualification Letter | March 23, 2005 |
| AR#060500134 | Qualification Letter | May 10, 2006 |
| 6C294014 | Edison Material Supply Procurement Order for Mitsubishi Heavy Industries | September 28, 2004 |
| SO23-617-01 | Specifications for design and fabrication of RSG for Unit 2 and Unit 3 | 4 |
| SO23-617-02 | Specifications for Baseline Pre-Service Examination on Tubing for RSG | 1 |
| SO23-617-03 | Replacement Steam Generator Installation Unit 2 and 3 | 4 |
| SO23-617-04 | Specifications for the Transportation of Replacement Steam Generators | 1 |
| TL C001783 | San Onofre Topical Report Quality Assurance Manual | 64 |
| TL C001782 | San Onofre 2&3 FSAR Updated Quality Assurance Program Topical Report SCE-1 | 15 |
| | SONGS Unit 2 & 3 Replacement Steam Generator QA/QC Manufacturing Oversight Plan Japan Steel Works | 0 |

| Number | Title | Revision/Date |
|---|---|---|
| | SONGS Unit 2 & 3 Replacement Steam Generator QA/QC Oversight Plan | 1 |
| | SONGS Unit 2 & 3 Replacement Steam Generator Receipt Inspection Plan | 0 |
| SGR-A10183 | Replacement Steam Generator Resident Oversight Plan | 1 |
| SGR-A10159 | San Onofre Nuclear Generating Station Unit 2 & 3 Steam Generator Replacement Project Plan | 1 |
| MHI-1SV-05 | Source Verification Report of MHI/Japan Steel Work | March 15, 2005 |
| MHI-1SV-06 | Source Verification Report of MHI/Japan Steel Work | February 7, 2006 |
| MHI-1SV-07 | Source Verification Report of MHI | March 20, 2007 |
| MHI-1SV-08 | Source Verification Report of MHI/Japan Steel Work | August 29, 2008 |
| MHI-2SV-05 | Source Verification Report of MHI | April 1, 2005 |
| MHI-2SV-06 | Source Verification Report of MHI/Japan Steel Work | March 24, 2006 |
| MHI-2SV-07 | Source Verification Report of MHI | November 2, 2007 |
| MHI-3SV-05 | Source Verification Report of MHI/Japan Steel Work | May 3, 2005 |
| MHI-3SV-06 | Source Verification Report of MHI | May 3, 2006 |
| MHI-4SV-05 | Source Verification Report of MHI/Japan Steel Work | May 4, 2005 |
| MHI-4SV-06 | Source Verification Report of MHI/Japan Steel Work | May 23, 2006 |
| MHI-5SV-05 | Source Verification Report of MHI/Japan Steel Work | June 10, 2005 |

| Number | Title | Revision/Date |
|---|---|---|
| MHI-5SV-06 | Source Verification Report of MHI | September 26, 2006 |
| MHI-6SV-05 | Source Verification Report of MHI | July 1, 2005 |
| MHI-6SV-06 | Source Verification Report of MHI | January 24, 2007 |
| MHI-7SV-05 | Source Verification Report of MHI/Japan Steel Work | August 12, 2005 |
| MHI-7SV-06 | Source Verification Report of MHI | January 16, 2007 |
| MHI-8SV-05 | Source Verification Report of MHI | March 26, 2007 |
| MHI-8SV-06 | Source Verification Report of MHI | Date? |
| MHI-9SV-05 | Source Verification Report of MHI/Japan Steel Work | October 13, 2005 |
| MHI-10SV-05 | Source Evaluation Report of MHI | February 8, 2006 |
| MHI-11SV-05 | Source Verification Report of MHI/Japan Steel Work | December 21, 2005 |
| SO123-XII-18.19 | Nuclear Oversight Procedure Supplier Audits | 10 |
| SO123-XII-7.12 | Nuclear Oversight Procedure Source Verification | 5 |

CALCULATIONS

| Number | Title | Revision |
|---|---|---|
| SO23-617-1-C275 | Design Report of the Channel Head Region | 6 |
| SO23-617-1-C514 | Design for RCS Flow Rate | 1 |
| SO23-617-1-M1562 | Retainer Bar Tube Wear Report | 0 |
| | | |

CORRECTIVE ACTION REPORTS

| | | | | |
|---|---|---|---|---|
| | | | | |
| | | | | |
| | | | | |

Comn
were r
numbe

DESIGN BASIS DOCUMENTS

| Number | Title | Revision |
|---|---|---|
| SO23-617-01 | Specification for Design and Fabrication of RSGs for Unit 2 and Unit 3 | 4 |
| SO23-617-1-M1492 | As-Built Reconciliation Report for Unit 3 | 2 |
| L5-04GA428 | Design of Anti-Vibration Bar | 5 |
| DBD-SO23-365 | Design Basis for Steam Generator and Secondary Side | 10 |

DESIGN CHANGE NOTIFICATIONS/SUPPLIER DEVIATION REQUESTS

| Number | Title | Revision |
|---|---|---|
| NECP 800071703 | Engineering Change Package, "Replacement Steam Generators" | 0 |
| SDR-007 43366-05007 | Circulation Ratio for RSG | 0 |
| SDR-037 43366-06037 | Tube-to-Tube Clearance in 2A RSG | 0 |

| Number | Title | Revision |
|---|---|---|
| SDR-047 43366-07047 | Tool Mark in 3A Tubesheet | 0 |
| SDR-050 43366-07050 | Tool Mark in 3B Tubesheet | 0 |
| SDR-051 43366-07051 | Unit 2A Lower Shell Assembly | 0 |
| SDR-053 43366-07053 | Unit 2B Lower Shell Assembly | 0 |
| SDR-059 43366-08059 | Unit 3B Lower Shell Assembly | 0 |
| SDR-064 43366-08064 | Axial Length of AVB | 0 |
| SDR-079 43366-08079 | Statistical Size of Tube-to-AVB Gap | 0 |
| SDR-082 43366-09082 | Divider Plate Repair of Unit 3 RSGs | 0 |
| SDR-086 10041870-09086 | Specifications for Unit 3 RSG Tube Material | 0 |
| SDR-098 10041870-10098 | Overall Height of 3A RSG | 0 |
| SDR-099 10041870-10099 | Perpendicularity and Parallelism of 3A RSG Key Bracket | 0 |
| SDR-100 10041870-10100 | Parallelism of 3B RSG Key Bracket | 0 |

DRAWINGS

| Number | Title | Revision |
|---|---|---|
| SO23-617-1-D103 | Design Drawing – Component and Outline Drawing 1 / 3 | 5 |
| SO23-617-1-D104 | Design Drawing – Component and Outline Drawing 1 / 3 | 2 |
| SO23-617-1-D106 | Design Drawing Tubesheet and Extension Ring 1 of 3 | 12 |
| SO23-617-1-D107 | Design Drawing Tubesheet and Extension Ring 2 of 3 | 5 |
| SO23-617-1-D108 | Design Drawing Tubesheet and Extension Ring 3 of 3 | 8 |
| SO23-617-1-D109 | Design Drawing Lower Shell, Middle Shell, Transition Cone and Upper Shell Stub 1 of 4 | 5 |

| Number | Title | Revision |
|---|---|---|
| SO23-617-1-D110 | Design Drawing Lower Shell, Middle Shell, Transition Cone and Upper Shell Stub 2 of 4 | 7 |
| SO23-617-1-D111 | Design Drawing Lower Shell, Middle Shell, Transition Cone and Upper Shell Stub 3 of 4 | 4 |
| SO23-617-1-D112 | Design Drawing Lower Shell, Middle Shell, Transition Cone and Upper Shell Stub 4 of 4 | 4 |
| SO23-617-1-D113 | Design Drawing Channel Head 1 of 4 | 9 |
| SO23-617-1-D113 | Design Drawing Channel Head 1 of 4 | 15 |
| SO23-617-1-D114 | Design Drawing Channel Head 2 of 4 | 13 |
| SO23-617-1-D115 | Design Drawing Channel Head 3 of 4 | 5 |
| SO23-617-1-D116 | Design Drawing Tube Bundle 1 of 3 | 1 |
| SO23-617-1-D117 | Design Drawing Tube Bundle 2 of 3 | 1 |
| SO23-617-1-D118 | Design Drawing Tube Bundle 3 of 3 | 3 |
| SO23-617-1-D159 | Design Drawing Upper Shell, Upper Head Ring and Upper Head Top 1 of 4 | 7 |
| SO23-617-1-D160 | Design Drawing Upper Shell, Upper Head Ring and Upper Head Top 2 of 4 | 2 |
| SO23-617-1-D161 | Design Drawing Upper Shell, Upper Head Ring and Upper Head Top 3 of 4 | 4 |
| SO23-617-1-D162 | Design Drawing Upper Shell, Upper Head Ring and Upper Head Top 4 of 4 | 2 |
| SO23-617-1-D210 | Design Drawing of Moisture Separator Assembly 1 of 6 | 10 |
| SO23-617-1-D211 | Design Drawing of Moisture Separator Assembly 2 of 6 | 10 |
| SO23-617-1-D212 | Design Drawing of Moisture Separator Assembly 3 of 6 | 5 |
| SO23-617-1-D274 | Design Drawing Channel Head 4 of 4 | 4 |
| SO23-617-1-D294 | Design Drawing Tube Support Plate Assembly 1 of 3 | 3 |
| SO23-617-1-D295 | Design Drawing Tube Support Plate Assembly 2 of 3 | 4 |
| SO23-617-1-D296 | Design Drawing Tube Support Plate Assembly 3 of 3 | 5 |
| SO23-617-1-D383 | Design Drawing – Critical Field Interface Dimensions and Major Tolerances 1 / 3 | 7 |

| Number | Title | Revision |
|---|---|---|
| SO23-617-1-D391 | Design Drawing Wrapper Assembly 1 of 5 | 5 |
| SO23-617-1-D392 | Design Drawing Wrapper Assembly 2 of 5 | 0 |
| SO23-617-1-D393 | Design Drawing Wrapper Assembly 3 of 5 | 2 |
| SO23-617-1-D394 | Design Drawing Wrapper Assembly 4 of 5 | 2 |
| SO23-617-1-D395 | Design Drawing Wrapper Assembly 5 of 5 | 3 |
| SO23-617-1-D494 | Design Drawing – Divider Plate1 / 2 | 10 |
| SO23-617-1-D495 | Design Drawing – Divider Plate 2 / 2 | 6 |
| SO23-617-1-D507 | Design Drawing Anti-Vibration Bar Assembly 1 of 9 | 4 |
| SO23-617-1-D508 | Design Drawing Anti-Vibration Bar Assembly 2 of 9 | 2 |
| SO23-617-1-D509 | Design Drawing Anti-Vibration Bar Assembly 3 of 9 | 0 |
| SO23-617-1-D539 | Design Drawing Anti-Vibration Bar Assembly 4 of 9 | 0 |
| SO23-617-1-D540 | Design Drawing Anti-Vibration Bar Assembly 5 of 9 | 2 |
| SO23-617-1-D541 | Design Drawing Anti-Vibration Bar Assembly 6 of 9 | 2 |
| SO23-617-1-D542 | Design Drawing Anti-Vibration Bar Assembly 7 of 9 | 8 |
| SO23-617-1-D543 | Design Drawing Anti-Vibration Bar Assembly 8 of 9 | 3 |
| SO23-617-1-D544 | Design Drawing Anti-Vibration Bar Assembly 9 of 9 | 1 |
| SO23-617-1-D680 | Design Drawing – Tubing Expansion and Seal Welding | 3 |
| SO23-617-1-D1099 | Fabrication Drawing – General Shipping Arrangement [SON 2E89; SON 2E882E0-88] | 2 |
| SO23-617-1-D1100 | Fabrication Drawing – General Shipping Arrangement [SON 3E89; SON 3E88] | 2 |
| SO23-617-1-D1488 | Fabrication Drawing – Temporary Attachment For Channel Head and Tubesheet Welding (Unit 3) | 0 |
| L5-04FW111 | Detail of AVB 1 of 5 (Center Narrow AVB) | 6 |
| L5-04FW112 | Detail of AVB 2 of 5 (Center Wide AVB) | 2 |
| L5-04FW113 | Detail of AVB 3 of 5 (Side Narrow AVB) | 2 |
| L5-04FW114 | Detail of AVB 4 of 5 (Side Wide AVB for Hot Side) | 2 |
| L5-04FW115 | Detail of AVB 5 of 5 (Side Wide AVB for Cold Side) | 2 |

ENGINEERING REPORTS (ER)

| Number | Title | Revision |
|---|---|---|
| SO23-617-1-M1401 | Divider Plate Weld Joint Separation Root Cause Evaluation Report | 4 |
| SO23-617-1-C157 | Evaluation of Tube Vibration | 3 |
| SO23-617-1-C749 | Analytical Report of AVB Assembly | 4 |
| SO23-617-1-M1265 | Summary Design Report | 8 |
| SO23-617-1-M1231 | Performance Analysis Report | 3 |
| SO23-617-1-C682 | Analytical Report of Separator and Dryer Assemblies | 7 |
| SO23-617-01R3 | Design Report of Tube | 5 |

MHI DOCUMENTS

| Number | Title | Revision/Date |
|---|---|---|
| UHQ-08N013 | MHI Survey Report of Sumitomo Metal Industries, Limited. Steel Tube Works | 0 |
| UHQ-11N010 | MHI Survey Report of Sumitomo Metal Industries, Limited. Steel Tube Works | 0 |
| UHQ-05N015 | MHI Survey Report of Sumitomo Metal Industries, Limited. Pipe & Tube Works | 1 |
| UHQ-08N014 | MHI Survey Report of Sumitomo Metal Industries, Limited. Steel Tube Works | 0 |
| UHQ-11S005 | MHI Survey Report of Sumitomo Metal Industries, Limited. Steel Tube Works | 0 |
| UHQ-05N019 | MHI Survey Report of Sumitomo Metal Industries, Limited. Steel Tube Works | 0 |

| Number | Title | Revision/Date |
|---|---|---|
| UHQ-08N013 | MHI Survey Report of Sumitomo Metal Industries, Limited. Steel Tube Works | 0 |
| BUH94-06 | Quality Assurance Survey/Audit Procedure of Vendors | 6 |
| BUH94-06 | Vendor Evaluation Procedure | 9 |
| BUH94-06 | Vendor Evaluation Procedure | 13 |
| 5ZDD94-06 | Vendor Evaluation Procedure | 1 |
| UHW-68-06A002 | MHI Evaluation on Corrective Action Established by Sumitomo Metal Industries Limited | 0 |
| UHNR-SON-RSG-06N005 | Nonconformance Report for Alloy 690 SG Tubing for SONGS Unit 2 | |
| UHQ-07N004 | MHI Audit Report of Sumitomo Metal Industries, Limited. Steel Tube Woks | 1 |
| UHCP-70N004 | Corrective Action Plan Followup Report | 0 |
| UES-20100006 | Qualified Vendor List | 18 |
| L5-04GB004 | Submittal Document Control List | 53 |
| UGNR-SON2-RSG-020 | Nonconformance Report Channel head for Unit 2A | February 2, 2006 |
| UGNR-SON2-RSG-038 | Nonconformance Report Unacceptable local diameter change of tube holes | June 2, 2006 |
| UGNR-SON2-RSG-052 | Nonconformance Report Unacceptable length of 10 tube hole pitch of tube support plate #3 | September 11, 2006 |

| Number | Title | Revision/Date |
|---|---|---|
| UHQ-08N013 | MHI Survey Report of Sumitomo Metal Industries, Limited. Steel Tube Works | 0 |
| UGNR-SON2-RSG-062 | Nonconformance Report Incorrect end caps of AVB 2ASN154C and AVB 2ASN164C | December 1, 2006 |
| UGNR-SON2-RSG-075 | Nonconformance Report Unacceptable gaps between tubes and AVBs | March 24, 2007 |
| UGNR-SON2-RSG-091 | Nonconformance Report Incorrect machining for steam flow limiting device | September 4, 2007 |
| UGNR-SON2-RSG-096 | Nonconformance Report Unacceptable dimensions for steam flow limiting device of Unit 2A | October 23, 2007 |
| UGNR-SON3-RSG-009 | Nonconformance Report Unacceptable local diameter change of tube holes | May 10, 2007 |
| UGNR-SON3-RSG-024 | Nonconformance Report Some gaps between tubes and AVBs are larger than the criterion | November 30, 2007 |
| UGNR-SON3-RSG-049 | Nonconformance Report Out of tolerance on hand holes inside diameter | March 2, 2009 |
| UGNR-SON3-RSG-055 | Nonconformance Report Divider plate metal repair butter/weld crack after post bake | September 11, 2009 |
| UGNR-SON-RSG-06N002 | Nonconformance Report Feedwater nozzle for unit 2 ID: 21721-101 | February 2, 2006 |
| B91U-N0001 | Mitsubishi Heavy Industries Ltd Kobe Shipyard & Machinery Works Quality Assurance Manual (Nuclear) | 39 |
| UES-69-040038 | Mitsubishi Heavy Industries Ltd Kobe Shipyard & Machinery Works Quality Assurance Program Manual (Project Addenda) | 15 |

| Number | Title | Revision/Date |
|---|---|---|
| UHQ-08N013 | MHI Survey Report of Sumitomo Metal Industries, Limited. Steel Tube Works | 0 |
| UHH-G06A97 | Stop Work Order for FMA (Final Mill Annealing) on Manufacturing of Heat Transfer Tubing for SONGS RSG | 0 |

MISCELLANEOUS DOCUMENTS

| | | |
|---|---|---|
| AR 060500134 | Action Request: Qualification Letter | |
| AR 040901345 | Action Request: Qualification Letter | |
| AR 050301458 | Action Request: Qualification Letter | |
| | Setpoint Transmittal Unit 2 and 3 Gas Monitors | December 6, 2010 |
| | SONGS Unit 3 Chemistry/Operations Logs – SG Event Timeline | January 31, 2012 |
| | Radiation Monitor 3RT-7870 Setpoints | May 31, 2011 |
| | Radiation Monitor 3RT-7818A Setpoints | May 31, 2011 |

| | | |
|---|---|---|
| 2G-030-3 | Condenser Air Ejector Continuous Gas Post-Release Report | January 31, 2012 |
| SO23-617-01 | Specification for Design and Fabrication of RSGs for Unit 2 and Unit 3 | 4 |
| SO23-617-02 | Specification for Baseline Pre-Service Examination (PSE) on Tubing for Replacement Steam Generators | 1 |
| | Updated Final Safety Analysis Report for San Onofre Units 2 and 3 | April 2009 |
| SO23-617-1-M29 | Design Review Item List | 9 |
| DA 2002-92 | Dominion Audit of Mitsubishi Heavy Industries | June 9, 2002 |
| V03-008 | Omaha Public Power District Audit of Mitsubishi Heavy Industries | July 18, 2003 |
| 99901030/2008-201 | Mitsubishi Heavy Industries (MHI), Kobe, Japan, inspection of selected portions of MHI's Quality Assurance (QA) program, and 10 CFR Part 21 program | July 18, 2008 |
| 99901384/2009-201 | Sumitomo Metal Industries, Limited, Higashi-Mukojima Amagasaki, Japan, inspection of selected portions of Sumitomo's quality assurance (QA) program and 10 CFR Part 21 program | November 13, 2009 |
| SMI-AQA-9041 | Reply to Notice of Nonconformance(99901 384/2009-201-01) | 0 |

MODIFICATIONS

| Number | Title | Date |
|---|---|---|
| Engineering Change Package NECP 800071702 | 50.59 Screening and Evaluation for Replacement Steam Generators – Unit 2 | July 31, 2009 |
| Engineering Change Package NECP 800071703 | 50.59 Screening and Evaluation for Replacement Steam Generators – Unit 3 | July 31, 2009 |

NUCLEAR NOTIFICATIONS

| | | | | |
|---|---|---|---|---|
| 201907899 | | | | |
| | | | | |
| | | | | |

*NN's issued as a result of inspection activities.

PROCEDURES

| Number | Title | Revision |
|---|---|---|
| SO123-ODCM | Offsite Dose Calculation Manual | 0 |
| SO123-0-47 | Notification and Reporting of Significant Events | 18 |
| SO123-III-5.9 | Manual Effluent Gaseous Release Permits, Setpoint Calculations, and Monitor Calibration Constant Evaluations | 8 |
| SO123-VIII-1 | EPIP: Recognition and Classification of Emergencies | 36 |
| SD-SO23-310 | System Description - Turbine Building Sampling System | 9 |
| SD-SO23-690 | System Description – Steam Generator E088/089 | 18 |
| SD-SO23-690 | System Description – Steam Generator Radiation Monitors RE-6753 & RE-6759 | 18 |
| SD-SO23-690 | System Description – Condenser Air Ejector Wide Range Radiation Monitors RE-7870A/B & Low Range Radiation Monitors RE-7818 | 18 |
| SB-SO-FB-006 | Divider Plate Weld Joint Repair Procedure | 10 |
| SB-SO-HT-1001 | Post Weld Heat Treatment Procedure | 22 |
| SO123-XXXII-2.27 | Supplier Deviation Requests (SDRs) | 5 |
| SO23-617-1-D104 | Design Drawing - Component and Outline Drawing 2/3 | 2 |
| SO23-617-1-D1099 | General Shipment Arrangement SON-2A | 4 |
| SO23-617-1-M1246 | Hydrostatic Test Procedure | 3 |
| SO23-617-1- | Post Weld Heat Treatment Procedure | 21 |

| Number | Title | Revision |
|---|---|---|
| M139 | | |
| SO23-617-1-M1395 | Divider Plate Weld Joint Procedure | 9 |
| SO23-617-1-M1398 | Divider Plate Weld Joint Repair Plan | 12 |
| SO23-617-1-M1461 | Additional Post Weld Heat Treatment Procedure for Divider Plate Weld Joint Repair | 0 |
| SO23-617-1-M616 | Tubesheet Drilling Procedure | 9 |
| SO23-617-1-M733 | Helium Leak Test Procedure of the Tube to Tubesheet Welds (High Pressure) | 5 |
| SO23-617-1-M735 | Helium Leak Test Procedure of the Tube to Tubesheet Welds (Low Pressure) | 3 |
| SO23-617-1-M819 | AVB Structure Assembly Procedure | 8 |
| SO23-617-1-M820 | Tubing and AVB Installation Procedure | 6 |
| SO23-617-1-M821 | Anti-Vibration Bar Inspection Procedure (After Assembly) | 5 |
| UGS-L5-050043 | Anti-Vibration Bar Inspection Procedure (Individual Bar) | 1 |
| UGS-L5-050045 | Inspection Procedure for Tube and Anti-Vibration Bar Inspection | 10 |

VENDOR DOCUMENTS

| Number | Title | Revision/Date |
|---|---|---|
| 51-9176667-001 | Engineering Information Record, "SONGS 2C17 & 3C17 Steam Generator Degradation Assessment" | 1 |
| UGNR-SON2-RSG-012 | DI for Tube Support Plate Material | 1 |
| UGNR-SON2-RSG-014 | Discrepancy for tube thickness of TSP between Drawing and Purchase Specification | 0 |
| UGNR-SON2-RSG-015 | Unacceptable Indications by MT for wrapper support of Unit 2 #A | 1 |
| UGNR-SON2- | Unacceptable Indications by MT for Anti rotation support of | 0 |

| Number | Title | Revision/Date |
|---|---|---|
| RSG-021 | Unit 2 #A | |
| UGNR-SON2-RSG-027 | Unacceptable MT indication for Anti-Rotation Supports | 0 |
| UGNR-SON2-RSG-054 | Unacceptable length of 10 tube hole pitch of tube support Plate # 6 | 1 |
| UGNR-SON2-RSG-058 | Insufficient clearance between the tubes in Row No. 28 and 30 in Column No. 22 | 3 |
| UGNR-SON2-RSG-059 | Insufficient clearance between the tubes in Row No 92 and 94 in Column No. 34 | 0 |
| UGNR-SON2-RSG-067 | Unacceptable Gaps between Tubes and AVBs | 7 |
| UGNR-SON2-RSG-075 | Unacceptable gaps between Tubes and AVBs | 1 |
| UGNR-SON2-RSG-091 | Incorrect Machining for Steam Flow Limiting Device | 0 |
| UGNR-SON2-RSG-103 | Damaged Locking Plates of Vane Jacking Device | 9 |
| UGNR-SON2-RSG-109 | As built dimension of #2A RSG | 1 |
| UGNR-SON2-RSG-112 | As built dimension of #2B RSG | 0 |
| UGNR-SON3-RSG-001 | Tubesheet | 0 |
| UGNR-SON3-RSG-018 | Unacceptable local diameter change of Tube holes | 2 |
| UGNR-SON3-RSG-024 | Some Gaps between Tubes and AVBs are larger than the criterion | 1 |
| UGNR-SON3-RSG-030 | Some gaps between tubes and AVBs are larger than the criterion | 0 |
| UGNR-SON3-RSG-051 | Divider Plate Weld Crack | 16 |
| UGNR-SON3-RSG-052 | Divider Plate Weld Crack | 19 |
| UGNR-SON3-RSG-057 | Extension of Tubesheet PWHT Duration | 1 |
| UGNR-SON3-RSG-059 | Out of Tolerance dimensions on Primary Inlet/Outlet Nozzles and Support Skirt | 1 |

| Number | Title | Revision/Date |
|---|---|---|
| UGNR-SON3-RSG-062 | Out of tolerance dimensions on Primary Inlet/Outlet Nozzles and Support Skirt (#B RSG) | 1 |
| UGNR-SON3-RSG-067 | UT indications in the Alloy 600/690 butter of Divider Plate Weld Groove | 0 |
| UGNR-SON3-RSG-074 | As built dimensions of #3A RSG (Overall Height) | 0 |
| UGNR-SON3-RSG-075 | As built dimension of #3A RSG | 1 |
| UGNR-SON3-RSG-076 | As built dimension of #3B RSG | 0 |
| UHNR-SON3-RSG-07N001 | Divider Plates for Unit 3 | 0 |
| Heat Treatment Record 40010SG-B-900D-R1-68 | Heat Treatment Chart for SG3 | April 4, 2012 |
| SO23-617-1-M149 | Purchase Specification for Heat Transfer Tubing | 4 |
| Fabrication Process Sheet 3901-SG-A-400E (Order 2563901/G101) | Rework of AVB Insertion for SONGS Unit 2 Replacement Steam Generator #A – Lower Portion | 1 |
| Fabrication Process Sheet 3901-SG-A-400D (Order 2563901/2300) | Helium Leak Test for SONGS Unit 2 Replacement Steam Generator #A – Lower Portion | 0 |
| TSN-5050 | Control Document Status list For Alloy 690 SG Tubing | 2 |
| TSN-5051 | Program of Preproduction Qualification (PPQ) For Alloy 690 SG Tubing | 3 |
| TSN-5053 | Melting Procedure for Alloy 690 SG Tubing | 0 |
| TSN-5054 | Identification and Traceability Procedure for Alloy 690 SG Tubing | 2 |

| Number | Title | Revision/Date |
|---|---|---|
| TSN-5055 | Prohibited and Detrimental Material Control Procedure for Alloy 690 SG Tubing | 0 |
| TSN-5072 | Sampling Test Specimen Procedure for Alloy 690 SG Tubing | 2 |
| TSN-5073 | Chemical Analysis Procedure for Alloy 690 SG Tubing | 1 |
| TSN-5074 | Inclusion Test Procedure for Alloy 690 SG Tubing | June 4, 2005 |
| 005F-No.4316 | PPQ Test Results of Alloy 690 SG Tubing for San Onofre Nuclear Generating station Unit 2&3 | 2 |
| 4009-3ir01 | Moody International Ltd Inspection Report of Sumitomo Metal Industries | September 28, 2005 |

## SEQUENCE OF EVENTS

## San Onofre Nuclear Generating Station, Unit 2 and 3 Steam Generators

| Date | Event Description |
|---|---|
| November 2001 | Licensee forms a team to study the viability of replacing the steam generators |
| May 7, 2002 | Vendor benchmarking commences |
| July 2002 | Bechtel replacement study complete |
| November 7, 2003 | Replacement steam generator specification complete |
| December 12, 2003 | Replacement steam generator specification sent to procurement office |
| December 21, 2003 | Replacement steam generator request for proposal issued |
| February 17, 2004 | Bechtel installation study report completed |
| February 27, 2004 | Steam generator replacement request filed with California Public Utility Commission |
| February 27, 2004 | Replacement steam generator bids received by SCE |
| July 28, 2004 | Replacement steam generator vendor selected |
| August 2, 2004 | Replacement steam generator bid evaluation review board start |
| September 13, 2004 | Replacement steam generator bid evaluation completed |
| September 16, 2004 | SCE Board of Directors approval for Mitsubishi to design and manufacture steam generators |
| September 30, 2004 | Replacement steam generator contract signed |

| | |
|---|---|
| September 30, 2004 | Fabrication of Unit 2 and Unit 3 steam generators commences at Mitsubishi |
| November 2004 | SCE performs first full quality assurance audit of Mitsubishi |
| March 2, 2005 | Replacement steam generator installation specification sent to procurement office |
| March 17, 2005 | Mitsubishi/SCE anti-vibration bar design discussion |
| March 2005 | SCE performs follow-up surveillance audit of Mitsubishi |
| March 23, 2005 | SCE places conditional qualification on Mitsubishi |
| September 21, 2005 | Final environmental impact report released to public |
| October 2005 | SCE performs follow-up quality assurance audit of Mitsubishi |
| December 15, 2005 | California Public Utility Commission approval received |
| December 15, 2005 | Installation contract signed with Bechtel |
| February 2006 | SCE performs follow-up quality assurance audit of Mitsubishi |
| March 10, 2006 | Edison International Company Board of Directors approval of steam generator replacement project |
| April 22, 2006 | SONGS Unit 2 refueling outage completed |
| May 1, 2006 | Replacement steam generator transportation specification issued |
| May 10, 2006 | SCE removes conditional qualification from Mitsubishi |
| September 27, 2006 | Sumitomo Metal Industries issues a non-conformance report on some tubing for non-conformance to specifications associated with the final mill annealing process |

| | |
|---|---|
| September 27, 2006 | Mitsubishi issues stop work order to Sumitomo |
| September 28, 2006 | Mitsubishi issues corrective action request to Sumitomo based on the final mill annealing non-conformance report |
| September 29, 2006 | Mitsubishi visits Sumitomo to conduct root cause investigation |
| October 3, 2006 | Mitsubishi visits Sumitomo to confirm the adequacy of the corrective actions taken to address the root cause findings from the September 29, 2006 meeting |
| October 3, 2006 | Mitsubishi releases stop work order after confirming adequacy of Sumitomo's corrective actions |
| November 10, 2006 | Non-conformance report associated with final mill annealing process is closed |
| March 12, 2007 | Corrective action request associated with the final mill annealing non-conformance report closed |
| May 8, 2007 | Mitsubishi performs followup audit at Sumitomo and issues corrective action request for two findings in the audit |
| July 17, 2007 | Sumitomo submits corrective actions taken for the findings of the May 8, 2007 audit; Mitsubishi closes corrective action request. |
| September 13, 2006 | Mitsubishi/SCE technical meeting regarding anti-vibration bars |
| April 2008 | Fabrication of Unit 2 steam generators complete |
| April – June 2008 | Mitsubishi performs primary and secondary side hydrostatic pressure tests of Unit 2 steam generators |
| July 4, 2008 | AREVA performs baseline pre-service eddy current examinations on steam generator 2E0-89 at Mitsubishi facilities in Kobe, Japan |
| July 18, 2008 | AREVA performs baseline pre-service eddy current examinations on steam generator 2E0-88 at Mitsubishi facilities in Kobe, Japan |
| September and October 2008 | Final inspection for Unit 2 steam generators is completed. Primary and secondary sides filled with nitrogen. |

| | |
|---|---|
| December 16, 2008 | Unit 2 steam generators shipped from Kobe, Japan |
| February 14, 2009 | Unit 2 steam generators arrive at SONGS |
| Early March 2009 | Fabrication of Unit 3 steam generators complete |
| Middle March 2009 | Primary and secondary hydrostatic pressure tests conducted on Unit 3 steam generators |
| March 18, 2009 | Unit 3 divider plate weld failure discovered |
| March – July 2009 | Root cause evaluation of the divider plate-to-tubesheet weld conducted by Mitsubishi |
| March – June 2009 | Repair procedures developed for Unit 3 steam generators |
| June 2009 | Repair work on Unit 3 steam generators commences |
| July 2009 | AREVA performs final pre-service eddy current examinations on Unit 2 steam generators at SONGS |
| September 2009 – April 2010 | Unit 2 performs a refueling outage and installs the replacement steam generators |
| March 29, 2010 | Repair work to Unit 3 steam generator 3E0-89 complete |
| April 5, 2010 | Repair work to Unit 3 steam generator 3E0-88 complete |
| April 2010 | Unit 2 recommences power operations |
| April 18, 2010 | Unit 3 steam generator 3E0-89 passes primary side hydrostatic pressure retest |
| April 24, 2010 | Unit 3 steam generator 3E0-88 passes primary side hydrostatic pressure retest |
| June 2010 | AREVA performs baseline pre-service eddy current examinations on Unit 3 steam generators at Mitsubishi facilities in Kobe, Japan |

| | |
|---|---|
| August 2, 2010 | Unit 3 steam generators shipped |
| October 4, 2010 | Unit 3 steam generators arrive at SONGS |
| October 2010 – February 2011 | Unit 3 performs a refueling outage and installs the replacement steam generators |
| February 2011 | Unit 3 recommences power operations |
| January 10, 2012 | Unit 2 refueling outage start |
| January 31, 2012 | Unit 3 tube leak; rapid shutdown commences |
| February 2, 2012 | Unit 3 reaches cold shutdown conditions |
| February 12, 2012 | Unit 3 eddy current inspections commence on both steam generators |
| March 13, 2012 | In-situ pressure testing commences on tubes in steam generator 3E0-88 of Unit 3 |
| March 14, 2012 | In-situ pressure test failures on tubes located in Row 106 Column 78, Row 102 Column 78, and Row 104 Column 78 of steam generator 3E0-88 |
| March 15, 2012 | In-situ pressure test failures on tubes located in Row 100 Column 80, Row 107 Column 77, Row 101 Column 81, and Row 98 Column 80 of steam generator 3E0-88 |
| March 16, 2012 | In-situ pressure test failure on tube located in Row 99 Column 81 of steam generator 3E0-88 |
| March 16 – 21, 2012 | The 65 remaining tubes in steam generator 3E0-88 pass in-situ pressure testing |
| March 15 – 21, 2012 | The 56 identified tubes in steam generator 3E0-89 of Unit 3 are in-situ pressure tested and all tubes passed. |
| March 19 – 29, 2012 | NRC Augmented Inspection Team performs inspections at SONGS |

| | |
|---|---|
| March 23, 2012 | NRC received a letter from SCE outlining their commitments for corrective actions prior to restart of both Unit 2 and Unit 3 |
| March 27, 2012 | NRC issues a Confirmatory Action Letter to SCE |
| June 18, 2012 | NRC conducts public Augmented Inspection Team exit meeting near SONGS |

UNITED STATES
NUCLEAR REGULATORY COMMISSION
REGION IV
1600 EAST LAMAR BLVD
ARLINGTON, TEXAS 76011-4511

~~July 18, 2012~~

Mr. Peter Dietrich
Senior Vice President and
Chief Nuclear Officer
Southern California Edison Company
San Onofre Nuclear Generating Station
P.O. Box 128
San Clemente, CA 92674-0128

SUBJECT: SAN ONOFRE NUCLEAR GENERATING STATION – NRC AUGMENTED INSPECTION TEAM REPORT ~~05000361/2012007 and~~ 05000362/2012007

Dear Mr. Dietrich:

The U. S. Nuclear Regulatory Commission (NRC) completed an inspection at your San Onofre Nuclear Generating Station (SONGS). The enclosed report documents the inspection results, which were discussed with you and other members of your staff during a public exit meeting on June 18, 2012.

~~The Augmented Inspection Team (AIT) was established to review the causes, safety implications, and your staff's actions following an event that occurred on January 31, 2012, involving a reactor coolant leak identified in a Unit 3 steam generator and a subsequent identification that multiple steam generator tubes in Unit 3 had experience substantial and unusual wear, eight of which failed pressure testing. The SONGS Unit 3 steam generators were new and had been in operation for less than one operating cycle. At the time of the event, SONGS Unit 2 was shutdown in a refueling outage with steam generators that had been in service for one operating cycle.~~

Unit 3 had been operating for approximately one year following replacement of the steam generators when on January 31, 2012, control room operators received alarms, that indicated reactor coolant was leaking into steam generator 3E0-88. The leak was unexpected, and the control room operators responded in accordance with their procedures to perform a rapid shutdown, since the leak, although small, had increased enough in a short period of time to warrant the precautionary shutdown. The estimated leak rate was 75 gallons per day. The facility license allows full power operation with a steady leak rate of less than 150 gallons per day.

The first indication of the leak was from the main condenser air ejector radiation monitors reaching their alarm set point. The radiation monitors continuously sample from a vent stack for the purpose of rapidly identifying steam generator tube leaks. This was a direct release of

radioactivity to the atmosphere, which is allowed by the facility license, up to limits in the regulations. The licensee reviewed the amount of gaseous radioactivity released and estimated a dose of approximately 0.0000452 mrem to a member of the public. The annual regulatory limit to a member of the public is 100 mrem per year. During a radiation protection inspection the week of February 13, 2012, the team reviewed the licensee dose estimates and did not identify any issues.

Unit 3 control room operators performed a controlled shutdown of Unit 3 on January 31, 2012, and reached cold shutdown conditions on February 2, 2012. The operators then prepared the steam generators for tube inspections, which were started on February 12, 2012. The first inspection confirmed the location of the leak in steam generator 3E0-88. One tube was found with a small leak and no other tubes were leaking.

The licensee completed an extensive and expanded eddy current inspection of 100 percent of the steam generator tubes in both Unit 3 steam generators. Following pre-established testing requirements, the licensee identified 129 tubes in Unit 3 (56 tubes in steam generator 3E0-89 and 73 tubes in steam generator 3E0-88) that required in-situ pressure testing. This testing began on March 13, 2012, and was performed under ambient conditions.

Of the 129 tubes tested, a total of 8 tubes failed in-situ pressure testing which included the original tube that was leaking. All of the failed tubes occurred in steam generator 3E0-88. Three of the tubes failed at or below a test pressure (3200 psi) equivalent to a design basis main steam line break differential pressure and temperature. The remaining five tubes failed near, but below the maximum differential test pressure of 5250 psig. This test pressure was equivalent to the minimum burst pressure capacity required by the plant technical specifications.

In accordance with Management Directive 8.3, "NRC Incident Investigation Program," deterministic and conditional risk criteria were used to evaluate the level of NRC response for this operational event. This event met three deterministic criteria (involved a major deficiency in design having potential generic safety implications; led to a significant loss of integrity of the primary coolant pressure boundary; and, involved an emergency or non-emergency event or situation, related to the health and safety of the public or on-site personnel or protection of the environment, for which a 10 CFR 50.72 report has been submitted that is expected to cause significant, heightened public or government concern) and the conditional large early release probability for the event was estimated to be in the overlap range for a special inspection/augmented inspection. Based on deterministic criteria being met and the risk assessment of this condition, Region IV, in consultation with the Office of Nuclear Reactor Regulation and Office of Nuclear Security and Incident Response, concluded that the NRC response should be an augmented team inspection.

This augmented inspection was chartered, in part, to ~~review~~identify the circumstances surrounding the tube degradation; review the licensee's actions following discovery of the conditions; evaluate the licensee's ~~determination~~review of ~~the~~potential causes of the unusual steam generator tube wear; review the steam generator modeling; and, assess the differences between Unit 2 and Unit 3 steam generators. ~~The charter is available in ADAMS at ML12075A258. It is not the responsibility of an AIT to determine compliance with the NRC rules~~

~~and regulations or to recommend enforcement actions, this will be done through subsequent NRC inspection or review.~~

~~The~~ Based on inspection, the team concluded that: (1) plant operators responded to the ~~January 31, 2012, steam generator tube leak~~event in accordance with procedures ~~and~~ in a manner that protected public health and safety~~. Plant~~; (2) safety systems ~~worked as expected during the event.~~

~~The NRC team identified ten~~were maintained and responded in accordance with the plant design; and (3) the loss of steam generator tube integrity was a serious safety issue that must be resolved. The purpose of this inspection was to gather facts and identify issues requiring followup, and, as such, no findings were identified. Ten items requiring additional ~~review for regulatory action. These items~~followup are documented as "unresolved" items in the enclosed report. ~~The NRC will conduct subsequent inspections or reviews to determine what, if any, regulatory actions result from the "unresolved" items.~~

~~SONGS Unit 3 steam generators had experienced excessive vibration of tubes in the U-bend region of the steam generators to the extent that the tubes rubbed against each other (tube-to-tube interactions) causing excessive wear and loss of structural integrity. Your staff determined that the vibration was caused by the steam conditions in the U-bend region of the steam generators by a phenomenon called "fluid elastic instability." The NRC inspection team concluded that the steam generators' design and configuration did not provide the necessary margin to prevent this phenomenon.~~

~~Although the steam generator tube degradation from this phenomenon observed in Unit 2 steam generators was not as severe, the NRC team concluded that both units' steam generators were of similar design with similar thermal hydraulic conditions and configurations. Therefore, SONGS Unit 2 steam generators are also susceptible to this phenomenon.~~

~~Accordingly, as documented in NRC Confirmatory Action Letter dated March 27, 2012, (ML12087A323), you are required to submit in writing to NRC for review and acceptance, your actions and plans to prevent recurrence of loss of tube integrity before the resumption of power operations in both SONGS Units 2 and 3.~~

In accordance with 10 CFR 2.390 of the NRC's "Rules of Practice," a copy of this letter, its enclosure, and your response (if any) will be available electronically for public inspection in the NRC Public Document Room or from the Publicly Available Records (PARS) component of the NRC's document system (ADAMS). ADAMS is accessible from the NRC Web site at http://www.nrc.gov/reading-rm/adams.html (the Public Electronic Reading Room).

Sincerely,

~~/RA/~~

Elmo E. Collins
Regional Administrator

Docket No.: ~~50-361, 50-362~~05000362
License No: NPF~~-10, NPF-~~15

Enclosure:
~~1.~~ Inspection Report ~~05000361/2012007 and~~ 05000362/~~20120072~~012-007

w/Attachment~~(s)~~:
~~1.~~ Supplemental Information
~~2. Sequence of Events~~

cc w/ encl: Electronic Distribution

DISTRIBUTION:

(~~Ray.Keller~~Dale.Powers@nrc.gov)
Regional Administrator (Elmo.Collins@nrc.gov)
Deputy Regional Administrator
(Art.Howell@nrc.gov)
DRP Director (Kriss.Kennedy@nrc.gov)
DRP Deputy Director (Allen.Howe@nrc.gov)
DRS Director (Tom.Blount@nrc.gov)
DRS Deputy Director (Patrick.Louden@nrc.gov)
Senior Resident Inspector
(Greg.Warnick@nrc.gov)
Resident Inspector (John.Reynoso@nrc.gov)
SONGS Administrative Assistant
(Heather.Hutchinson@nrc.gov)
Branch Chief, DRS/PSB2
(Greg.Werner@nrc.gov)
Branch Chief, DRP/D (Ryan.Lantz@nrc.gov)
Senior Project Engineer, DRP/D
(Nick.Taylor@nrc.gov)
Project Engineer, DRP/D (David.You@nrc.gov)
Project Engineer, DRP/D (Brian.Parks@nrc.gov)
Public Affairs Officer (Victor.Dricks@nrc.gov)
Public Affairs Officer (Lara.Uselding@nrc.gov)
Branch Chief, DRS/TSB
RITS Coordinator (Marisa.Herrera@nrc.gov)
Regional Counsel (Karla.Fuller@nrc.gov)
Congressional Affairs Officer
(Jenny.Weil@nrc.gov)
OEMail Resource
RIV/ETA: OEDO (Michael.McCoppin@nrc.gov)
DRS/TSB STA (Dale.Powers@nrc.gov)
RSLO (Bill.Maier@nrc.gov)
D/DIR, DORL (Louise.Lund@nrc.gov)
PM (Randy.Hall@nrc.gov)
D: NRR (Eric.Leeds@nrc.gov)
D: NSIR (Jim.Wiggins@nrc.gov)
D: NRO (Glen.Tracy@nrc.gov)
NRR/LPL4 (Michael.Markley@nrc.gov)
NRR/IOEB (Harold.Chernoff@nrc.gov)
~~NRR/DORL (Doug.Broddus@nrc.gov)~~
EDO (Bill.Borchardt@nrc.gov)
DEDR (Michael.Johnson@nrc.gov)
DIR, DORL Michele.Evans@nrc.gov

DOCUMENT NAME: S:DRS\REPORTS\SONGS 2012007 AIT-GEW
~~ADAMS Accession No.:~~ ML12188A748

| | | | | | |
|---|---|---|---|---|---|
| SUNSI Rev Compl. | ☑Yes ☐ No | ADAMS | ☑Yes ☐ No | Reviewer Initials | GEW |
| Publicly Avail. | ☑Yes ☐ No | Sensitive | ☐Yes ☑ No | Sens. Type Initials | GEW |

| | | | | | |
|---|---|---|---|---|---|
| ~~DRS/PSB1~~AIT Member/RIV | AIT Member/~~RIV~~RII | AIT Member/~~RII~~NRO | AIT Member/~~NRO~~NRR | AIT Member/NRR | AIT Member/~~NRR~~RES |
| ~~GWerner~~JReynoso | ~~JReynoso~~JRivera-Ortiz | ~~JRivera-Ortiz~~JOrtega-Luciano | ~~JOrtega-Luciano~~EMurphy | ~~EMurphy~~AJohnson | ~~AJohnson~~CThurston |
| ~~GEW /RA/~~ | ~~Per e-mail~~ | ~~Per e-mail~~ | ~~Per e-mail~~ | ~~Per e-mail~~ | ~~Per e-mail~~ |
| ~~07/09/12~~ | ~~07/10/12~~ | ~~07/09/12~~ | ~~07/09/12~~ | ~~07/12/12~~ | ~~07/12/12~~ |
| AIT ~~Member/RES~~ Team Leader/RIV | ~~SRA/RIV~~D:DRS | ~~AIT Team Leader/RIV~~BC/D:DRP | ~~D:DRS~~DRA | RA | ~~RA~~ |
| ~~CThurston~~GWerner | ~~MRunyan~~TBlount | ~~GWerner~~RLantz | ~~TBlount~~AHowell | ECollins | ~~ECollins~~ |
| ~~Per e-mail~~ | ~~Per e-mail~~ | ~~GEW /RA/~~ | ~~TB - /RA/~~ | | ~~/RA/~~ |
| ~~07/11/12~~ | ~~07/12/12~~ | ~~07/12/12~~ | ~~07/13/2012~~ | | ~~07/18/2012~~ |

OFFICIAL RECORD COPY

DIR, DIRS Ho.Nieh@nrc.gov
D/DIR, DIRS John.Lubinski@nrc.gov

Form

## EXECUTIVE SUMMARY

On ~~March 19, 2012, an Augmented Inspection Team (AIT) was dispatched to~~January 31, 2012, San Onofre Nuclear Generating Station ~~to gather facts and understand the circumstances surrounding the January 31, 2012~~(SONGS) Unit 3 control room operators received an alarm that indicated a primary-~~-~~to-secondary ~~leak~~ reactor coolant leak from steam generator 3E0-88. Although the leak rate was small, it increased enough in a short period of time for the licensee to perform a rapid shutdown. The estimated leak rate was 75 gallons per day. The facility license allows full power operation with a steady state leak rate of less than 150 gallons per day. On February 2, 2012, Unit 3 reached cold shutdown conditions.

On February 12, 2012, Southern California Edison (SCE) commenced eddy current inspections of 100 percent of the tubes in both Unit 3 steam generators. During these inspections, the licensee discovered unexpected wear in both steam generators, including wear at retainer bars (similar to the wear found in Unit 2 steam generators) and significant tube-to-tube wear in the free-span areas. The inspections identified 56 tubes in steam generator 3E0-89 and ~~failure of eight~~73 tubes in steam generator ~~tubes~~ 3E0-88 that SCE performed in-situ pressure testing on to ~~maintain~~determine if they met the structural integrity ~~as required by~~requirements in plant technical specifications ~~during testing.~~

From March 13 – 21, 2012, AREVA conducted in-situ pressure testing of the suspect tubes in both steam generators. There were a total of eight tube failures during testing, all in steam generator 3E0-88. These tubes failed to satisfy the tube integrity performance criteria. At the time of the augmented team inspection, no stabilization or plugging of tubes had been performed in Unit 3 because the licensee was still conducting a cause evaluation of the failed tubes. There were two members of the Augmented Inspection Team on-site during the week of March ~~13, 2012. The primary-to-secondary leak was the result of a single tube in Unit 3 steam generator 3E0-88 failing to maintain structural integrity.~~ 12 that observed portions of the in-situ pressure testing.

~~Specifically the AIT was chartered to review the circumstances surrounding the tube degradation; review the licensee's actions following discovery of the conditions; evaluate the licensee's determination of the causes of the unusual steam generator tube wear; review the steam generator modeling; and, assess the differences between Unit 2 and Unit 3 steam generators.~~

~~The team determined that plant operators responded to the event in a manner that protected public health and safety and all safety systems performed their functions to support the safe shutdown and cooldown of the plant. However, the loss of steam generator tube integrity is a serious safety issue that must be resolved prior to further power operation.~~

~~The AIT~~On March 23, 2012, NRC received a letter from SCE outlining their commitments for corrective actions prior to restart of both Unit 2 and Unit 3.

On March 27, 2012, the NRC issued a Confirmatory Action Letter to SCE, which outlined specific actions the licensee must complete before restarting Units 2 and 3 that included identifying the cause of the tube wear; taking corrective actions to prevent loss of tube integrity; and performing a mid-cycle outage to perform tube inspections.

From March 19 – 29, 2012, the NRC Augmented Inspection Team performed on-site inspections at SONGS. After the on-site portion was completed, the team continued to review various documents and attended a number of expert panels associated with the cause evaluations, thermal/hydraulic modeling, and Unit 2 operational assessment. The team identified ten unresolved items that warranted additional follow-up: (1) adequacy of the post trip/transient procedure; (2) evaluation and disposition of the Unit 3 loose parts monitor alarms; (3) design of retainer bar; (4) control of original design dimensions; (5) evaluation of and controls for divider plate repair; (6) atmospheric controls of Unit 3 steam generators during shipment; (7) no tube bundle support used during shipping; (8) evaluation and disposition of ~~accelerometer readings during shipping~~accelerometers; (9) adequacy of Mitsubishi's thermal-hydraulic model; and (10) change of methodologies associated with 10 CFR 50.59 review. ~~Consistent with existing NRC inspection processes, these unresolved issues will be inspected and dispositioned during follow-up inspection efforts to determine if there are any violations of regulatory requirements.~~

~~The AIT inspection~~

The team determined: (1) plant operators responded to the event in accordance with procedures in a manner that protected public health and safety; (2) equipment responded in accordance with the plant design; and (3) the cause evaluations for Unit 2 and Unit 3 tube wear were appropriate.

At the time of the leak on Unit 3 steam generator 3E0-88, Unit 2 had completed eddy current testing of all the tubes in both steam generators as part of their first refueling outage subsequent to the steam generators being replaced in 2009. The eddy current testing did identify significant tube wear around the upper retainer bar, with one tube requiring in-situ pressure testing. Wear indications were found at anti-vibration bar supports, tube support plates and at a foreign object (that was removed). Southern California Edison did determine the cause of tube wear in Unit 2 to be from vibration of the tubes against the retainer and anti-vibration bars. Initially, no tube-to-tube wear was identified. Because of the extensive tube-to-tube wear identified on Unit 3, SCE conducted additional eddy current testing on 1375 tubes on each Unit 2 steam generator. This testing was completed using a more sensitive probe in the same area where tube-to-tube wear was identified on Unit 3. The licensee identified that two tubes in Unit 2 exhibited tube-to-tube wear similar to the wear identified in Unit 3 steam generators. Initially, these findings resulted in a total of 94 plugged tubes, with 15 tubes stabilized in steam generator 2E0-89. For steam generator 2E0-88 this initially resulted in 98 plugged tubes, with 18 tubes stabilized. Additional plugging and stabilizing was completed for Unit 2 steam generators to address the causes of

tube-to-tube wear identified. The corrective actions taken to address the causes of the tube-to-tube wear will be inspected as part of the Confirmatory Action Letter and documented in Inspection Report 05000361, 362/2012009.

Overall, the team concluded that~~: (1)~~ SCE was~~ adequately~~ pursuing the causes of the unexpected Unit 3 steam generator tube-to-tube degradation. In an effort to identify the causes, SCE ~~retained~~brought in a ~~significant~~large number of outside industry experts, consultants, and steam generator manufacturers, including Westinghouse and AREVA to perform thermal-hydraulic and flow induced vibration modeling and analysis~~; (2) The~~. The licensee identified the most probable causes of the tube-to-tube wear as a combination of ~~unpredicted, adverse~~higher than predicted thermal-/hydraulic conditions and ~~insufficient~~improvements in the manufacturing of the Unit 3 steam generators. The improvements in the manufacturing resulted in less contact forces ~~in the upper tube bundle caused a phenomenon called~~ "between the anti-vibration bars and the tubes. The combination of these causes allowed fluid-elastic instability" ~~which was a significant contributor to the tube to tube wear resulting in the tube leak. The team concluded that the differences in severity of the tube-to-tube wear between Unit 2 and Unit 3 may be related to the changes to the manufacturing/fabrication of the tubes and other components which may have resulted in increased clearance between the anti-vibration bars and the tubes; (3) Due to modeling errors, the SONGS replacement generators were not designed with adequate thermal hydraulic margin to preclude the onset of fluid elastic instability. Unless changes are made to the operation or configuration of the steam generators, high fluid velocities and high void fractions in localized regions in the u-bend will continue to cause excessive tube wear and accelerated wear that could result in tube leakage and/or tube rupture; (4) The thermal hydraulic phenomena contributing to the fluid elastic instability is present in both Unit 2 and 3 steam generators; (5) Based on the updated final safety analysis report description of the original steam generators, the steam generators major design changes were appropriately reviewed in accordance with the 10 CFR 50.59 requirements. However, further review is required related to the change in methodology used for the steam generator stress analysis calculations.~~ vibration to occur. Additional on-site inspection will be required to review and closeout the unresolved items.

~~With regard to the radiological release as a result of the tube leak, it was determined that the tube leak was detected by the condenser steam jet air ejector radiation monitor as per design. In addition, the radiation monitor alarmed and alerted SONGS operators of the steam generator tube leak as required. The release resulted in an estimated 0.0000452 (4.52 E-5) mrem dose to the public.~~

TABLE OF CONTENTS


EXECUTIVE SUMMARY ..... - 1 -

SUMMARY OF FINDINGS ..... - 2 -

~~SUMMARY OF FINDINGS~~ ..... 1.0 Description of Event (Charter Item 1) ..... - 3 -

~~1.0 Description~~1 ..... Sequence of ~~Event (Charter Item 1)~~Events ..... - 3 -

~~1.1 Sequence of Events~~2 ..... System Descriptions ..... - 6 -

~~1.2 System Descriptions~~ ..... 1.3 Resident Inspectors' Assessment of Steam Generator Tube Leak Event Response ..... - 7 -

~~1.3 Resident Inspectors' Assessment~~4 ..... Description of Steam Generator ~~Tube Leak Event Response~~Inspections at SONGS Unit 2 ..... - 11 -

1.45 Description of Steam Generator Inspections at SONGS Unit ~~2~~3 ..... - 13 -

~~1.5 Description of Steam Generator Inspections at SONGS Unit 3~~ ..... 1.6 In-Situ Pressure Testing ..... - 16 -

~~1.6 In-Situ Pressure Testing~~ ..... 2.0 Probable Cause Evaluation (Charter Item 2) ..... - 19 -

~~2.0 Probable~~1 ..... SONGS Cause Evaluation ~~(Charter Item 2)~~ ..... - 19 -

~~2.1 SCE~~2 ..... Mitsubishi Cause Evaluation ..... - 20 -

~~2.2 Mitsubishi Cause Evaluation~~ ..... 3.0 Operational Differences in Configuration and Operation Between Unit 2 and 3 (Charter Item 3) ..... - 23 -

~~3~~4.0 ~~Operational~~ ..... Design and Manufacturing Differences ~~in Configuration and Operation between Unit 2 and 3~~ ~~(Charter Item 3~~Item #4) (Mitsubishi Heavy Industries Charter Item 1) ..... - 25 -

~~4~~5.0 ~~Design and Manufacturing Differences~~ .. Quality Assurance/Quality Control (Charter Item ~~#4~~5) (Mitsubishi Charter Item ~~1~~4) ..... - 39 -

5.0 1 .. SONGS Quality Assurance/Quality Control ~~(Charter Item 5) (Mitsubishi Charter Item 4)~~ ..... - 40 -

5.1 ~~SONGS~~2 ..... Mitsubishi Heavy Industries Quality Assurance/Quality Control ..... - 41 -

5.2 ~~Mitsubishi~~ 3 ..... Quality Assurance/~~Quality Control~~ Conclusion ..... - 43 -

~~5.3 Quality Assurance Conclusion~~ ..... ~~6.0~~
Implementation of Steam Generator Industry Information (Charter Item 6) (Mitsubishi Heavy Industries Charter Item 3) ..... - 44 -

~~6.0 Implementation of Steam Generator Industry Information (Charter Item 6) (Mitsubishi Charter Item 3)~~ ..... ~~7.0~~
Packing, Shipping, Handling, and Receipt Inspection (Charter Item 7) ..... - 47 -

~~7~~8.0 ~~Packing, Shipping, Handling,~~ Thermal-hydraulic and ~~Receipt Inspection~~ Flow Induced Vibration Modeling (Charter Item ~~7~~) ..... - 47 -~~8~~
~~50~~

8.0~~1~~ Thermal-hydraulic ~~and Flow Induced Vibration Modeling (Charter Item 8)~~ Assessments ..... - 51 -

~~9.0 Risk Assessment (Charter Item 9)~~ ..... ~~8.2~~
NRC ATHOS Results ..... - 55 -

~~10.0 Assess Quality Assurance, Radiological Controls, and Safety Culture Components (Charter Item 10)~~ ..... ~~8.3~~
Conclusion ..... - 61 -

~~11~~9.0 ~~Operational impacts from Unit 3 to Unit 2~~ Risk Assessment (Charter Item ~~11~~9) ..... - 63 -

~~12~~10.0 ~~Divider Plate Manufacturing~~ Assess Quality Assurance, Radiological Controls, and ~~Weld Issues (Mitsubishi~~ Safety Culture Components (Charter Item ~~2~~10) ..... - 63 -

~~13.0 Office of Nuclear Reactor Regulation (NRR) Review of SONGS 50.59 Evaluation~~ ..... ~~11.0~~
Operational impacts from Unit 3 to Unit 2 (Charter Item 11) ..... - 65 -

~~14.0 Exit Meeting Summary~~ ..... ~~12.0~~
Mitsubishi Divider Plate Manufacturing and Weld Issues (Mitsubishi Heavy Industries Charter Item 2) ..... - 66 -

~~ATTACHMENT 1 SUPPLEMENTAL INFORMATION~~ ..... ~~A1~~ ~~13.0~~
Office of Nuclear Reactor Regulation Review of SONGS 50.59 Evaluation ..... - 71 -

~~ATTACHMENT 2 SEQUENCE OF EVENTS~~ ..... ~~A2~~ ~~14.0~~
Exit Meeting Summary ..... - 73 -

ATTACHMENT 1: SUPPLEMENTAL INFORMATION ..... A1-1

ATTACHMENT 2: SEQUENCE OF EVENTS ..... A2-1

Form:
pt
Form:

**U.S. NUCLEAR REGULATORY COMMISSION**
**REGION IV**

| | |
|---|---|
| Docket: | ~~50-361, 50-362~~05000362 |
| License: | ~~NPF-10,~~ NPF-15 |
| Report: | ~~05000361/2012007 and~~ 05000362/2012007 |
| Licensee: | Southern California Edison Company |
| Facility: | San Onofre Nuclear Generating Station~~, Unit 2 and 3~~ |
| Location: | 5000 S. Pacific Coast Hwy<br>San Clemente, California |
| Dates: | March 15 through June 18, 2012 |
| Team Leader: | G. Werner, RIV/Branch Chief/Plant Support Branch 2 |
| Inspectors: | A. Johnson, NRR/Materials Engineer<br>E. Murphy, NRR/Senior Materials Engineer<br>J. Ortega-Luciano, NRO/Reactor Operations Engineer<br>J. Reynoso, RIV/Resident Inspector<br>J. Rivera-Ortiz, RII/Senior Reactor Inspector<br>C. Thurston, RES/Reactor Systems Engineer |
| Approved By: | Elmo E. Collins, Regional Administrator |

## SUMMARY OF FINDINGS

~~IR 05000361/2012007;~~IR 05000362/2012007, 03/15/2012 through 06/18/2012, San Onofre Nuclear Generating Station; Augmented Inspection Team.

An Augmented Inspection Team was approved on March 16, 2012. Two inspectors on the team were onsite observing in-situ pressure testing the week of March 12. The remaining inspectors were dispatched to the site on March 19, 2012, to assess the facts and circumstances surrounding the tube leak and unexpected wear of tubes in Unit 3 steam generators. The Augmented Inspection Team was established in accordance with NRC Management Directive 8.3, "NRC Incident Investigation Program," and implemented using Inspection Procedure 93800, "Augmented Inspection Team." The inspection was conducted by a team of inspectors from the NRC's Region IV and Region II offices, the resident inspector from San Onofre Nuclear Generating Station, one engineer from the NRC Office of New Reactors, two engineers from the NRC Office of Nuclear Reactor Regulation, and one engineer from the NRC Office of Research. The team identified 10 issues that will require additional NRC inspection. These issues are tracked as unresolved items in this report.

A. NRC-Identified and Self-Revealing Findings

None

B. Licensee-Identified Violations

None

1.0 Description of Event (Charter Item 1)

1.1 Sequence of Events

In November 2001, SCE formed a team to study the viability of replacing the Unit 2 and Unit 3 original steam generators. The licensee performed an assessment of six steam generator vendors, which included vendor benchmarking, development of the replacement steam generator design specifications, a steam generator request for proposal, and a steam generator bid evaluation. In September 2004, the licensee selected Mitsubishi Heavy Industries (Mitsubishi) as the manufacturer of the replacement steam generator.

A general description and comparison of the Unit 2 and Unit 3 steam generators is included in Section 1.2.1 of this report.

In September 2004, Mitsubishi commenced fabrication of Unit 2 steam generators 2E0-89 and 2E0-88, and completed fabrication in April 2008.

At the time of the contract signing in September 2004, Mitsubishi had a quality assurance program in place that had been approved by the licensee, by taking credit for other utilities' reviews of Mitsubishi's quality assurance program. The licensee informed Mitsubishi that once enough fabrication was underway to support an evaluation, the licensee would perform an audit to confirm that their quality assurance program was operating properly.

In November 2004, the licensee performed an audit of the Mitsubishi quality assurance program at their facilities in Kobe, Japan, and then followed up with a surveillance inspection in March 2005. As a result of these two activities, the licensee informed Mitsubishi that additional oversight of Mitsubishi's design control activities was required. The licensee informed Mitsubishi that the additional oversight conditions would remain in place until such time that Mitsubishi had demonstrated improved design control performance, which would be verified by the licensee. After implementing the extra quality control steps, Mitsubishi submitted a letter to SCE stating that they were ready for the conditional qualification to be lifted. The licensee performed followup audits of Mitsubishi in October 2005 and February 2006, but still found enough instances of design control issues that the additional oversight requirements of the conditional qualification were not lifted. In May 2006, SCE was able to verify that Mitsubishi had demonstrated improved design control performance and therefore removed the conditional qualification of Mitsubishi.

After fabrication of the Unit 2 steam generators was complete in April 2008, Mitsubishi performed hydrostatic pressure tests of the primary and secondary sides of the Unit 2 steam generators. In July 2008, after completion of the hydrostatic pressure tests, AREVA performed the baseline eddy current pre-service examinations of the Unit 2 steam generators at the Mitsubishi facilities in Japan. The final inspections for the Unit 2 steam generators were completed in September and October 2008, followed by filling the primary and secondary sides of the Unit 2 steam generators with nitrogen. The Unit 2 steam generators were shipped from the Mitsubishi facilities in December 2008 and received on site at SONGS in February 2009. In July 2009, AREVA performed the

final eddy current pre-service examination on the Unit 2 steam generators at SONGS. The baseline and final eddy current pre-service examinations were performed in Japan and at SONGS, respectively, to assess whether any changes to the steam generator tubing had resulted from shipping, and no changes were identified.

The Unit 2 steam generators were installed during a refueling outage, between September 2009 and April 2010. On April 13, 2010, Unit 2 returned to power operations. NRC ~~engineering~~Engineering inspectors performed inspections in accordance with procedures IP 50001 (Inspection ~~Procedure 50001, "50.59), Steam Generator Replacement Inspection,"~~ and ~~Inspection Procedure~~IP 71111.17, "Evaluations of Changes, Tests, or Experiments and Permanent Plant Modifications." ~~This included a review of selected portions of modifications associated with the replacement steam generators to determine if the changes were done in accordance with 10 CFR 50.59.~~ The results of the ~~inspection~~inspections of the replacement steam generators for Unit 2 are documented in NRC Inspection Report 05000361/2009007. ~~(ML100630838)~~

The fabrication of the Unit 3 steam generators 3E0-89 and 3E0-88 was completed between September 2004 and April 2010. The design specifications of the Unit 2 and Unit 3 steam generators were the same when the contract between the licensee and Mitsubishi was signed; however, due to a fabrication issue, there was a modification to the divider plate-to-channel head weld requirements for the Unit 3 steam generators, and to the classification of the Unit 3 tubesheet material. The specifics of these modifications are discussed further in Section 1.2.a of this report.

In March 2009, after initial fabrication of the Unit 3 steam generators was complete, Mitsubishi performed hydrostatic pressure tests of the primary and secondary sides of the Unit 3 steam generators. After completion of the hydrostatic pressure tests, a visual inspection of the steam generator reactor coolant side revealed cracks in the welds that join the divider plate to the channel head of both steam generators.

From March through July of 2009, Mitsubishi performed a root cause evaluation, which showed that a change in the weld preparation process for the divider plate-to-channel head weld had resulted in the cracking of the weld. A repair procedure was developed and repair work on the Unit 3 steam generators began in June 2009. The repairs to the Unit 3 steam generators were completed in late March (3E0-89) and early April (3E0-88) of 2010. In late April 2010, the Unit 3 steam generators passed the primary hydrostatic pressure re-tests. In June 2010, AREVA performed a final eddy current pre-service examination of the steam generators at the Mitsubishi facilities in Japan, and this was used as the baseline pre-service examination for the Unit 3 steam generators. The steam generators were shipped from the Mitsubishi facilities in Japan in early August 2010, and arrived at SONGS in early October 2010.

The Unit 3 steam generators were installed during a refueling outage, between October 2010 and February 2011. On February 18, 2011, Unit 3 returned to power operations. ~~NRC engineering~~Engineering inspectors performed inspections in accordance with ~~Inspection Procedure~~procedures IP 50001, "Steam Generator Replacement Inspection," and ~~Inspection Procedure~~IP 71111.17, "Evaluations of Changes, Tests, or Experiments and Permanent Plant Modifications." ~~This included a review of selected portions of modifications associated with the replacement steam generators to determine if the~~

Form

~~changes were done in accordance with 10 CFR 50.59~~. The results of the ~~inspection~~inspections of the replacement steam generators for Unit 3 are documented in NRC Inspection Report 05000362/2010009. ~~(ML111300448)~~

Unit 2 was shut down for a scheduled refueling outage on January 10, 2012. Steam generator tubing inspections in steam generator 2E0-89 found unexpected wear caused by retainer bars on two tubes that required plugging in accordance with the technical specifications. Steam generator tubing inspections in steam generator 2E0-88 found wear on four tubes that required plugging in accordance with the technical specifications. Anti-vibration bars caused the wear on two of the tubes and retainer bars caused the wear on the other two tubes. Because of the unexpected wear, the licensee preventatively plugged 94 tubes in steam generator 2E0-89 and 98 tubes in steam generator 2E0-88. Fifteen of the tubes in steam generator 2E0-89 were stabilized prior to plugging, and 18 of the tubes in steam generator 2E0-88 were stabilized prior to plugging. Additional details of the inspections of the Unit 2 steam generators are provided in section 1.4 of this report

On January 31, 2012, Unit 3 control room operators received an alarm that indicated a primary-to-secondary reactor coolant leak from steam generator 3E0-88. The alarm received was from the main condenser air ejector radiation monitors, which continuously samples from a vent line for the purpose of rapidly identifying steam generator tube leaks. Although the leak rate was small, it increased enough in a short period of time for the licensee to perform a rapid shutdown. The estimated leak rate was 75 gallons per day. The facility license allows full power operation with a steady state leak rate of less than 150 gallons per day. On February 2, 2012, Unit 3 reached cold shutdown conditions. The licensee reviewed the amount of gaseous radioactivity released and estimated a dose of approximately 0.0000452 mrem to a member of the public. The annual regulatory limit to a member of the public is 100 mrem per year. This unplanned offsite release of radioactivity was reviewed by Region IV health physicist inspectors who confirmed SONGS' offsite dose estimate (see Section 10 for additional details).

After shutdown, the licensee started preparations for performing inspections of Unit 3 steam generators 3E0-89 and 3E0-88. The steam generator tube inspections commenced on February 12, 2012, and confirmed the location of the leak in steam generator 3E0-88 as coming from the tube in Row 106 Column 78. No other tubes were found to be leaking. The licensee then performed eddy current inspections of 100 percent of the tubes in both Unit 3 steam generators. During these inspections, the licensee discovered unexpected wear in both steam generators, including wear at retainer bars (similar to the wear found in Unit 2 steam generators) and significant tube-to-tube wear in the freespan areas (u-bend area of the tubes). The inspections identified 56 tubes in steam generator 3E0-89 and 73 tubes in steam generator 3E0-88 that SCE performed in-situ pressure testing on to determine if they met the structural integrity requirements in plant technical specifications. Additional details of the inspections of the Unit 3 steam generators are provided in section 1.5 of this report

From March 13 – 21, 2012, AREVA conducted in-situ pressure testing of the suspect tubes in both steam generators. There were a total of eight tube failures during testing, all in steam generator 3E0-88.

These tubes failed to satisfy the tube integrity performance criteria in the technical specifications. Additional details of the in-situ pressure tests are provided in Section 1.6 of this report.

From March 19 – 29, 2012, the NRC augmented inspection team performed inspections onsite at SONGS.

On March 27, 2012, the NRC issued a Confirmatory Action Letter to SCE, which outlined specific actions for each unit that the licensee must complete before restarting Unit 2 and Unit 3.

A more detailed sequence of events can be found in Attachment 2.

1.2 System Descriptions

a. Replacement Steam Generators

The Unit 2 and Unit 3 replacement steam generators contain thermally treated Alloy 690 tubing in a u-bend configuration, with a nominal outside diameter of 0.750 inches and a nominal wall thickness of 0.043 inches. There are 9727 tubes within each steam generator, which are arranged in 142 rows and 177 columns. The rows and columns are arranged in a nominal 1.000 inch triangular pitch (results in approximately 0.25 inches of clearance between tubes). The first thirteen rows of tubes were thermally stress relieved after bending to reduce susceptibility to stress corrosion cracking. The tubes were hydraulically expanded to the full depth of the tubesheet, which has a nominal thickness of 28.19 inches. Seven tube support plates made of Type 405 stainless steel provide lateral support to the tubes. The tube support plates contain broached trefoil holes with chamfered lands. Support of the tubes in the upper bundle is provided by six sets of Type 405 stainless steel, V-shaped, anti-vibration bars.

The original Model 3410 steam generators at Unit 2 and Unit 3 were manufactured by Combustion Engineering. Each steam generator had 9,350 mill-annealed, Alloy 600 tubes, which were a combination of u-bend tubes and tubes with two 90 degree bends (also called square bends). The tubes had a nominal outside diameter of 0.750 inches, and a nominal wall thickness of 0.048 inches. The tubes were expanded through the full depth of the tubesheet using an explosive process, and lateral support was provided by a number of lattice-grid (i.e., eggcrate) carbon steel tube supports. Tube support in the upper bundle was provided by carbon steel diagonal bars (commonly called batwings) and vertical straps. The original steam generators contained a cylindrically shaped support structure beneath the center of the tubesheet (called the stay cylinder) that provided structural support to the large diameter tubesheet.

Southern California Edison reviewed Information Notices, Generic Letters, Bulletins, and industry operational experience associated with steam generator issues when developing the design specifications for the replacement steam generators. Some of the changes are summarized below, for additional information see Section 6 of this report.

The design changes between the original and replacement steam generators noted above are commonly used in replacement steam generators today. The thermally

treated Alloy 690 tubing provides increased resistance to stress corrosion cracking as compared to thermally treated Alloy 600 tubing. The use of type 405 stainless steel (in lieu of carbon steel) for tube support plates eliminates the denting phenomenon associated with drilled carbon steel support plates. The use of broached trefoil holes (instead of drilled holes) in tube support plates reduces the number of contact points with tubes and increases flow area between the tube and tube support plate, thereby reducing the potential for corrosion products to buildup between the tube and the tube support plate. Combustion Engineering steam generators with the batwing design have typically suffered from wear on tubes (from the batwings) in the central stay cylinder region, due to higher cross flow velocities in this portion of the steam generators. In an effort to eliminate this high flow region, the replacement steam generators were designed with a thicker tubesheet that was inherently more rigid, and thus did not require the central stay cylinder. By choosing a design with all u-bend tubes, the bat wing design was eliminated and a new anti-vibration bar assembly was used. The new anti-vibration bar assembly is a free floating design that is supported by the tube bundle and is not attached to the tube bundle wrapper.

b. Channel Head-to-Divider Plate Weld

On March 18, 2009, after completion of the primary and secondary side hydrostatic pressure tests, a crack in the weld between the divider plate and the channel head on Unit 3 steam generator 3E0-88 was identified . Examination showed that the dissimilar metal weld, between the Alloy 690 divider plate and the low alloy steel channel head, had separated. Specifically, the failure occurred between the channel head and the Alloy 152 butter weld, which is the weld filler wire equivalent of Alloy 690. Upon examination, a similar weld failure was found in steam generator 3E0-89 although the size of the failure was not as large.

Mitsubishi performed a root cause evaluation and found that air carbon-arc gouging was used to remove the stainless steel cladding from the channel head, in preparation for making the divider plate-to-channel head dissimilar metal weld. The air carbon-arc gouging had resulted in carbon deposits in the channel head that were not completely removed by grinding that was performed after the gouging operation. The high carbon area increased the hardness of the channel head (due to carburization) and was the most probable cause of the failure between the channel head and the Alloy 152 butter weld. Mitsubishi also found that it was possible, but less probable, that the increased hardness of the channel head promoted hydrogen induced cracking in areas of the divider plate-to-channel head weld that had higher local stresses due to geometric configurations (i.e., at the corner of the divider plate).

1.3 Resident Inspectors' Assessment of Steam Generator Tube Leak Event Response

a. Inspection Scope

On January 31, 2012, the resident inspectors were on-site during the Unit 3 steam generator tube leak event. The resident inspectors observed the licensee's response to the steam generator tube leak from the control room; and observed the rapid shutdown, actions to cool the plant down, actions performed during recovery of plant systems, and other operator actions. Additionally, the resident inspectors conducted a review of

control room activities and equipment response to determine if the operating crew responded appropriately and if the plant systems responded as expected during the event. The resident inspectors conducted interviews with various on-shift personnel and reviewed the post trip report, which included control room logs, operator statements, and plant data trends to assess overall performance of the crew. The review also included procedure use and adequacy of the guidance used for event response, placing the plant in a safe and stable condition, establishing appropriate parameter limits for plant cooldown, and conducting the cooldown to cold shutdown conditions. With respect to operator awareness and decision making, the resident inspectors were specifically focused on the effectiveness of control board monitoring, technical decision making, and work practices of the operating crew. With respect to command and control, the resident inspectors focused on actions taken by the control room supervision in managing the operating crew's response to the event.

b. Observations and Findings

No findings were identified.

The team identified one unresolved item for which additional information is required to determine if performance deficiencies exist or if the issue constitutes a violation of NRC requirements.

On January 31, 2012, at 3:05 p.m. (PST), main control room operators at Unit 3 received a secondary plant system radiation alarm associated with the air ejectors followed by a blowdown radiation monitor alarm. Operations personnel responded in accordance with Abnormal Operating Instruction SO23-13-14, "Reactor Coolant Leak," Revision 16, since the entry conditions for a steam generator tube leak were satisfied. Operations personnel determined the leakage to be about 75 gallons per day, using a mass balance calculation (.06 gpm), from steam generator 3E0-88. This leak rate was below the Technical Specification 3.4.13, "RCS Operational Leakage," limit of 150 gallons per day for primary- to-secondary leakage through any one steam generator.

At 4:10 p.m., operations personnel evaluated that the primary-to-secondary leak rate exceeded 75 gallons per day on steam generator 3E0-88 and that the leak was increasing at greater than 30 gallons per day per hour, and consequently, initiated a rapid power reduction to be ≤ 50 percent power in one hour and in Mode 3 within the next two hours per Abnormal Operating Instruction SO23-13-14. In accordance with Abnormal Operating Instruction SO23-13-14, when reactor power was less than 35 percent, operations personnel tripped the reactor at 5:31 p.m. to enter Mode 3.

Due to the manual reactor trip, operations personnel entered Emergency Operating Instruction SO23-12-1, "Standard Post Trip Actions," Revision 26, to ensure the plant was placed in a stable, safe condition, and that the plant was configured to respond to the continuing steam generator tube leak event. Operations personnel implemented the emergency operating instructions and isolated the affected steam generator at 6:00 p.m. A plant cooldown was conducted by using main steam bypass from steam generator 3E0-89 to the main condenser. Mode 4 conditions were achieved at approximately 6 hours after isolation of the steam generator. Cooldown continued until Unit 3 was in Mode 5, cold shutdown.

The resident inspectors concluded that abnormal and emergency operating instructions were performed consistent with expected standards and that operations personnel exhibited the fundamental operator competencies in response to the Unit 3 steam generator tube leak event.

Specifically, the resident inspectors determined that the operating crew displayed a questioning attitude of changing plant parameters and took conservative actions. The operating crew identified important preliminary increasing trends of Unit 3 air ejectors radiation monitors and subsequent alarms in a timely manner for a tube leak in steam generator 3E0-88. Additionally, the resident inspectors determined that crew supervision exercised effective oversight of plant status, crew performance, and control room command and control.

(1) Introduction: The team identified an unresolved item associated with Operations Procedure SO123-0-A8, "Trip/Transient and Event Review," that required a formal review of operator actions and safety systems to determine if important systems responded as design. The formal review was not completed.

Description: On March 19, 2012, the team requested to review the results of operations post trip/transient evaluation of the January 31, Unit 3 tube leak event. Operations Procedure SO123-0-A8, "Trip/Transient and Event Review," Revision 8, required a detailed post trip review following unplanned reactor trips. However, a formal trip/transient and event review was not available because operations personnel determined the Unit 3 event was planned and therefore a formal review was not required.

On March 27, 2012, Team met with operations personnel to discuss items on a draft Unit 3 trip/transient evaluation provided to the team. The team also discussed with operations personnel the requirements in Operations Procedure SO123-0-A8, and concluded a basis for what was "planned" and "unplanned" was not defined. Operations personnel determined the Unit 3 reactor trip was a planned reactor trip because Abnormal Operating Instruction SO23-13-14, "Reactor Coolant Leak," Revision 16, Section 4, had described actions for primary-to-secondary leakage. Specifically, this section stated, in part, under plant conditions of increasing steam generator tube leakage, operations personnel were required to perform a rapid power reduction to less than 35 percent power, then trip the reactor.

The team discussed with operations personnel that definitions for unplanned events have been established through industry standards to report on plant performance. These standards include NEI 99-02, "Regulatory Assessment Performance Indicator Guideline," Revision 6. Industry Guidance NEI 99-02 indicated that Unit 3 reactor trip should be considered unplanned since the reactor trip was required by an abnormal operating instruction and would count against the performance indicator for unplanned reactor trips. NRC Regulatory Issue Summary (RIS) 2000-08, "Voluntary Submission of Performance Indicator Data," Revision 1, allows industry to use NEI 99-02 to report performance indicator data.

Additional review and follow up will be required to review the corrective actions associated with the procedural guidance for an event review and then determine whether this issue represents a performance deficiency or constitutes a violation of NRC requirements. This issue is identified as URI 05000362/2012007-01, "Adequacy of the Trip/Transient and Event Review Procedure."

~~c. Conclusions~~

~~The resident inspectors concluded that abnormal and emergency operating instructions were performed consistent with expected standard and that operations personnel exhibited the fundamental operator competencies in response to the Unit 3 steam generator tube leak.~~

~~Specifically, the resident inspectors determined that the operating crew displayed a questioning attitude of changing plant parameters and took conservative actions. The operating crew identified important preliminary increasing trends of Unit 3 air ejectors radiation monitors and subsequent alarms in a timely manner for a tube leak in steam generator 3E0-88. Additionally, the resident inspectors determined that crew supervision exercised effective oversight of plant status, crew performance, and control room command and control.~~

~~The team identified one unresolved item associated with the adequacy of the trip/transient procedure.~~

1.4 Description of Steam Generator Inspections at SONGS Unit 2

On January 10, 2012, SONGS Unit 2 was shutdown for a refueling outage. Southern California Edison personnel conducted a scheduled steam generator inspection in accordance with Technical Specification ~~5.5.2.11~~6.6.9, "Steam Generator (SG) Program." This was the first inspection of the Unit 2 steam generators since their replacement in January 2010. The accumulated operating time on the replacement Unit 2 steam generators was 1.7 effective full power years. There was no reported primary-to-secondary leakage at the time of shutdown.

The scope of the inspection included a 100 percent tube sample with an eddy current test bobbin probe over the full tube length, followup rotating coil inspections at special interest locations, and a secondary side foreign object search and retrieval. Three types of flaw indications were found in the tubes:

- Wear at the tube support plate and anti-vibration bar supports
- Wear caused by a loose part
- Wear at retainer bars

With the exception of the wear indications found at tube retainer bar locations, the wear indications found are similar to those found at other replacement steam generators after one cycle of operation. A total of 2411 tubes were found with indications at the tube support plates and anti-vibration bar supports, the vast majority of which had a measured depth of less than 20 percent of the tube wall thickness. Only two of these indications, located at the anti-vibration bar supports, exceeded the Technical Specification ~~5.5.2.11~~6.6.9.c repair limit of 35 percent of the tube wall thickness. The two affected tubes plus two additional tubes with 31 percent deep indications were stabilized and plugged.

Southern California Edison performed a reanalysis of the bobbin probe eddy current data collected during the Unit 2 inspection program. This reanalysis was performed after the finding of the long free-span indications in Unit 3, allowing insights gained during the Unit 3 inspections to be applied to the Unit 2 data. The scope of this reanalysis was a "box" of 1000 tubes in each Unit 2 steam generator which bounded the region of tubing affected by the instability damage in Unit 3. This reanalysis~~, using the bobbin probe,~~ confirmed the results of the original analysis and did not identify any tube-to-tube wear.

Two tubes were found with indications (less than 35 percent through wall) caused by a small loose part on the secondary side. This loose part was removed from the steam generator. Metallurgical analysis indicated the loose part was a piece of weld metal, most likely introduced during steam generator manufacturing operations. The two affected tubes were left in service.

Six tubes were found with indications at retainer bar intersections. The retainer bars are part of the support structure for the anti-vibration bars and are a unique feature of steam generators manufactured by Mitsubishi. The measured indication depths ranged from 28 to 90 percent of the tube wall thickness. Because of the short measured lengths of these flaws, only the 90 percent indication was in-situ pressure tested as part of condition monitoring. The affected tube was successfully pressurized to 5300 psi with no leakage, confirming that the Technical Specification ~~5.5.2.11.b.1 structural~~6.6.9.b tube integrity performance criteria were met. Mitsubishi attributed the cause of these indications to retainer bar vibration, the potential for which had not been evaluated during design (see Section 4 ~~of this report for additional details).~~ for additional details). Fort Calhoun is the only other domestic plant with Mitsubishi steam generators. The retainer bars at Fort Calhoun are significantly stiffer than at SONGS.

The six tubes with retainer bar indications have been plugged and stabilized. In addition, the remaining 182 tubes (total for both Unit 2 steam generators) that intersect the retainer bars were plugged as a preventive measure. Twenty four of these tubes were stabilized prior to plugging to ensure that all 188 plugged tubes will not sever due to continued vibration of the retainer bar. The tubes that were stabilized are strategically located at each end and center of the retainer bars.

Detailed plans for returning Unit 2 to service are still under development. Short-term plans relating to Unit 2 included conducting a full u-bend examination of 1375 tubes in both steam generators using a rotating coil. The tube sample was intended to ~~bound~~totally box-in the region affected by free-span wear seen in Unit 3 by significant margin. The rotating coil provides a slightly more sensitive inspection for long free-span wear scars than the bobbin probe. These inspections were performed subsequent to the team's site visit and identified two tubes in Unit 2 steam generator 2E0-89 with shallow free-span wear in the u-bend region. These indications both measured approximately 14 percent deep, and were located in the same region of the bundle affected by free-span indications in the Unit 3 steam generators.

The tube wear data for Unit 2 is shown below.

~~SONGS Unit 2 Steam Generators~~
Wear Depths Summary

| Steam Generator SG2E88 ~~(Through-Wall Wear)~~ | Anti-Vibration Bar | Tube Support Plate | U-Bend Freespan | Retainer Bar | Foreign Object | Total ~~Indications~~ | ~~Tubes with Indications~~ |
|---|---|---|---|---|---|---|---|
| TW* ≥ 50% | 0 | 0 | 0 | 1 | 0 | 1 | ~~1~~ |
| 35 - 49% | 2 | 0 | 0 | 1 | 0 | 3 | ~~3~~ |
| 20 - 34% | 86 | 0 | 0 | 0 | 2 | ~~868~~ 88 | ~~74~~ |
| 10 - 19% | 705 | 108 | 0 | 0 | 0 | 813 | ~~406~~ |
| TW < 10% | 964 | 117 | 0 | 0 | 0 | 1081 | ~~600~~ |
| TOTAL | 1757 | 225 | 0 | 2 | 2 | ~~198~~ 419 86 | ~~734*~~ |

*Through Wall

| Steam Generator SG2E89 ~~(Through-Wall Wear)~~ | Anti-Vibration Bar | Tube Support Plate | U-Bend Freespan | Retainer Bar | Foreign Object | Total ~~Indications~~ | ~~Tubes with Indications~~ |
|---|---|---|---|---|---|---|---|
| TW ≥ 50% | 0 | 0 | 0 | 1 | 0 | 1 | ~~1~~ |
| 35 - 49% | 0 | 0 | 0 | 1 | 0 | 1 | ~~1~~ |
| 20 - 34% | 78 | 1 | 0 | 3 | 0 | 82 | ~~67~~ |
| 10 - 19% | 1014 | 85 | 2 | 0 | 0 | 1101 | ~~496~~ |
| TW < 10% | 1499 | 53 | 0 | 0 | 0 | 1552 | ~~768~~ |
| TOTAL | 2591 | 139 | 2 | 5 | 0 | 2737 | ~~861*~~ |

~~*This value is the number of tubes with wear indications of any depth and at any location. Since many tubes have indications in more than one depth and location, the total number of tubes is less than the total number of indications.~~

1.5 Description of Steam Generator Inspections at SONGS Unit 3

After shutdown, the licensee started preparations for performing inspections of Unit 3 steam generators 3E0-89 and 3E0-88. The steam generator tube inspections

commenced on February 12, 2012, and confirmed the location of the leak in steam generator 3E0-88 as coming from the tube in Row 106 Column 78. The leak was located 2 inches beyond anti-vibration support number 4 on the hot leg side. It was found to be associated with a long (approximately 30 inches) free-span flaw indication. No other tubes were found to be leaking.

The licensee then performed eddy current inspections of 100 percent of the tubes, full length, in both Unit 3 steam generators with a bobbin probe. The bobbin probe examinations were supplemented by rotating coil examinations to confirm, characterize, and size the indications found by the bobbin probe. These examinations identified over 160 tubes in each steam generator with long free-span indications similar to that found on the leaking tube. In each steam generator, the tubes containing the free-span indications were grouped together in a tightly packed zone near the center of the tube bundle. The free-span indications were located on the upper and/or lower sides (i.e., the extrados and intrados) of the u-bend. Thus, a given free-span indication on the extrados of one tube tended to be matched by a similar indication on the intrados of the adjacent higher row tube located in the same tube column. This pattern provided early evidence to SCE personnel that the free-span indications were wear flaws due to tube-to-tube contact from motion of the u-bends within the plane of the u-bends. More than half of the free-span indications in each steam generator had maximum measured depths exceeding the 35 percent plugging limit in the technical specifications, and ranged to as much as 99 percent (for the non-leaking tubes).

Over 460 tubes in each steam generator were found with wear indications at the tube support plates. In general, tubes exhibiting the free-span wear indications tended to exhibit tube support plate indications with the highest depth measurements, typically with the deepest values at the seventh tube support plate and trending down at successively lower support levels. Approximately 170 tubes in each steam generator exhibited indications at the tube support plates that exceeded the 35 percent plugging limit, with maximum depths ranging to 70 percent.

Approximately 800 tubes in steam generator 3E0-88 and 900 tubes in steam generator 3E0-89 exhibited wear indications at the anti-vibration bar supports. Most of these measured less than 20 percent deep, and only 2 indications exceeded the 35 percent plugging limit. For tube indications at anti-vibration bars in tubes not exhibiting free-span u-bend indications, the length of the wear indications was confined to within the width of the anti-vibration bars. This was also true in SONGS Unit 2. For tubes that exhibited free-span indications, many of these tubes had wear indications at the anti-vibration bars that extended outside the width of the anti-vibration bars which indicated in-plane movement of these tubes in the u-bend area.

Four tubes were found with indications at retainer bar intersections, with measured depths ranging from 28 to 46 percent. At the time of the team's presence at the site, planned corrective actions with respect to tubes adjacent to the retainer bar were similar to those completed for Unit 2. The four tubes with retainer bar indications were plugged and stabilized. In addition, the remaining 184 tubes (total for both Unit 3 steam generators) that intersect the retainer bars were plugged as a preventive measure. Twenty four of these tubes were stabilized prior. The tubes that were stabilized are strategically located at each end and center of the retainer bars.

Tube wear data for Unit 3 is shown below.

~~SONGS Unit 3 Steam Generators~~Wear Depths Summary

~~Wear Depths Summary~~

| Steam Generator SG3E88 ~~(Through-Wall Wear)~~ | Anti-Vibration Bar | Tube Support Plate | Tube-to-Tube Wear | Retainer Bar | Foreign Object | Total ~~Indications~~ | ~~Tubes with Indications~~ |
|---|---|---|---|---|---|---|---|
| TW ≥ 50% | 0 | 117 | 48 | 0 | 0 | 165 | ~~74~~ |
| 35 - 49% | 3 | 217 | 116 | 2 | 0 | 338 | ~~119~~ |
| 20 - 34% | 156 | 506 | 134 | 1 | 0 | 797 | ~~197~~ |
| 10 - 19% | 1380 | 542 | 98 | 0 | 0 | 2020 | ~~554~~ |
| TW < 10% | 1818 | 55 | 11 | 0 | 0 | 1884 | ~~817~~ |
| TOTAL | 3357 | 1437 | 407 | 3 | 0 | **5204** | ~~919*~~ |

| Steam Generator SG3E89 ~~(Through-Wall Wear)~~ | Anti-Vibration Bar | Tube Support Plate | Tube-to-Tube Wear | Retainer Bar | Foreign Object | Total ~~Indications~~ | ~~Tubes with Indications~~ |
|---|---|---|---|---|---|---|---|
| TW ≥ 50% | 0 | 91 | 26 | 0 | 0 | 117 | ~~60~~ |
| 35 - 49% | 0 | 252 | 102 | 1 | 0 | 355 | ~~128~~ |
| 20 - 34% | 45 | 487 | 215 | 0 | 0 | 747 | ~~175~~ |
| 10 - 19% | 940 | 590 | 72 | 0 | 0 | 1602 | ~~450~~ |
| TW < 10% | 2164 | 94 | 1 | 0 | 0 | 2259 | ~~838~~ |
| TOTAL | 3149 | 1514 | 416 | 1 | 0 | **5080** | ~~887*~~ |

~~*This value is the number of tubes with wear indications of any depth and at any location. Since many tubes have indications in more than one depth and location, the total number of tubes is less than the total number of indications.~~

Detailed plans for satisfying the provisions of the NRC March 27, 2012, Confirmatory Action Letter for SONGS Unit 3 were not available and were still being developed.

1.6 In-Situ Pressure Testing

Technical Specification 5.5.~~2.11~~9.a for SONGS Units 2 and 3 requires that a condition monitoring assessment be performed during each outage that the steam generator tubes are inspected or plugged to confirm that the tube integrity performance criteria are being met. These performance criteria include ~~specific requirements~~standard criteria for ~~tube~~ structural integrity and accident ~~induced~~ leakage integrity. The limiting structural criterion applicable to the SONGS Units 2 and 3 is the normal steady state pressure differential across the tubes times a safety factor of three. The limiting accident ~~induced~~ leakage criterion is 0.5 ~~gpm~~gallons per minute under main steam ~~generator~~line break conditions.

Typically, the requirement for performing condition monitoring is satisfied by analyzing eddy current flaw indications relative to screening criteria that are functions of measured flaw depth, length, and/or eddy current voltage response. These screening criteria are conservative relative to the performance criteria since they make allowance for eddy current measurement error, uncertainties with respect to voltage correlations with flaw depth and burst strength, and material property variability. When these screening criteria are exceeded, in-situ pressure tests may be performed for tubes not meeting the screening criteria to confirm that the performance criteria are met for these tubes. In-situ pressure test procedures at SONGS and the screening criteria for selecting tubes to be tested were in accordance with Electrical Power Research Institute Report 1014983, "Steam Generator In-Situ Pressure Test Guidelines," Revision 3.

At Unit 2, one tube with a measured 90 percent deep indication at a retainer bar location was determined to be outside the screening criteria and was in-situ pressure tested. For Unit 3, an optional strategy to the screening criteria approach was taken in accordance with the Steam Generator In-Situ Pressure Test Guidelines, Appendix A. The Appendix A approach is a statistically based Monte Carlo approach that samples the uncertainty distributions associated with each of the input parameters for calculating tube burst pressure. This methodology selects all tubes determined to have a 0.95 probability or less of meeting the limiting structural integrity performance criterion. Application of this methodology led to selection of 129 tubes on Unit 3 for in-situ pressure testing, 73 tubes in steam generator 3E0-88 and 56 tubes in steam generator 3E0-89.

The in-situ pressure tests were performed under ambient conditions. Therefore the test pressures were adjusted upward from actual values under hot conditions to account for the increased yield and ultimate strength of the tube material under ambient conditions. The test pressures (with correction factors added) corresponding to normal operating conditions, main steam line break, and three times normal operating pressure differential were 1850 psi, 3200 psi, and 5300 psi, respectively.

The test procedure involved pressurizing the subject tube at a rate not to exceed 200 psi/sec to each test point. At each test point, pressure was held constant for two minutes if the tube was not leaking. If the tube was leaking, pressure was held constant for five minutes before ramping to the next test pressure.

The tube with a 90 percent deep retainer bar indication in Unit 2 was successfully tested to 5300 psi with no leakage. This demonstrated that all performance criteria were met

for this tube. For Unit 3, 136 of the 144 tubes were successfully tested to 5300 psi with no leakage, demonstrating that these tubes met the performance criteria. The remaining eight tubes "failed" prior to reaching 5300 psi. Failure in this context means that leakage occurred in excess of the 4.5 gallons per minute pump capacity during the test, and test pressure could not be maintained. All eight tubes that failed were in steam generator 3E0-88. All tubes tested in steam generator 3E0-89 passed with no leakage.

Table 1 summarizes the in-situ pressure test results for the eight tubes that failed the test. Three of the eight tubes failed at or below the test pressure corresponding to main steam line break differential pressure. The tube that leaked causing shutdown of SONGS Unit 3 (row 106, column 78) exhibited the lowest failure pressure, 2874 psi. The three tubes that failed at or below main steam line break pressure failed to meet the accident leakage performance criteria as well as the structural integrity performance criteria. The other five tubes met the accident leakage criteria, but failed to meet the structural criteria.

Prior to being tested to failure, the tube that leaked during operation (row 106, column 78) exhibited a measured leak rate of 0.072 gallons per minute at a test pressure corresponding to normal operating conditions. This compares with a leak rate of 0.06 gallons per minute measured by SCE operating staff for SONGS Unit 3 when they made the decision to shut the plant down. The reported operational leakage was evaluated based on ambient conditions. Both the operational and test measurements are less than the applicable technical specification limit of 0.1 gallons per minute.

Table 1 – SONGS 3 In-Situ Pressure Test Results

| SG | Row | Column | Leak Rate at Normal Operating Conditions (gpm) | Leak Rate at Main Steam Line Break (gpm) | Failure Pressure (psi) |
|---|---|---|---|---|---|
| 88 | 106 | 78 | 0.072 | >0.5 | 2874 |
| 88 | 102 | 78 | 0 | >0.5 | 3268 |
| 88 | 104 | 78 | 0 | >0.5 | 3180 |
| 88 | 100 | 80 | 0 | >0.5 | 4732 |
| 88 | 107 | ~~77~~87 | 0 | >0.5 | 5160 |
| 88 | 101 | 81 | 0 | >0.5 | 4889 |
| 88 | 98 | 80 | 0 | >0.5 | 4886 |
| 88 | 99 | 81 | 0 | >0.5 | 5026 |

2.0 Probable Cause Evaluation (Charter Item 2)

While the team was on-site, both SCE and Mitsubishi were in the process of conducting cause evaluations for the tube ~~failures~~failure and unexpected wear of steam generator tubes in Unit 3. As part of both evaluations, actions were being taken to understand the differences between Unit 2 and 3 steam generators. The cause evaluations were not complete and were undergoing changes while the Augmented Inspection Team was onsite; however, SCE did subsequently complete their cause evaluation prior to the team's exit meeting. The team did a detailed review of the completed cause evaluation.

2.1 ~~SCE~~SONGS Cause Evaluation

a. Inspection Scope

The team conducted an overall and independent review of SCE's actions taken to understand the probable cause for the steam generator tube degradation. The team reviewed the updated final safety analysis report, technical specifications, design basis documents, original steam generator design, replacement steam generator design, purchase order specifications, design changes, manufacturing changes, nonconformance reports, supplier deviation reports, and interviewed personnel. The review included understanding the licensee's criteria for determining the cause, or if one could not be determined, the most probable cause.

b. Observations and Findings

No findings were identified.

The team participated in discussions with the licensee's cause analysis team and noted that the licensee employed various root cause evaluation techniques. These included a change analysis technique that compared design differences and a problem analysis technique relying on a systematic process that looked at the causal effects and risk assessments of possible causes. The team reviewed the licensee causal analysis summary that assigned a ranking of highly probable to unlikely.

In the area of thermal hydraulic analysis the licensee contracted AREVA to verify the accuracy of Mitsubishi's thermal-hydraulic code (FIT III) used during the design of the replacement steam generators, by comparing it to ATHOS, a thermal-hydraulic code developed by the Electric Power Research Institute (EPRI). In addition, SCE contracted Westinghouse to perform a completely independent analysis using a Westinghouse modified ATHOS thermal-hydraulic code. AREVA also performed independent flow induced vibration analyses. The licensee brought on board MPR associates and numerous other technical experts, including a world renowned expert in flow induced vibration, to assist in the cause assessment. The team observed that SCE preliminary causal analysis was generally consistent with that of Mitsubishi. Initially, the licensee reviewed the following cause contributors:

- Departure from original steam generator u-bend/anti-vibration bar configuration -

highly probable
- Departure from original steam generator stay cylinder configuration - possible
- Departure from original steam generator tube support plate configuration - possible
- Replacement steam generator anti-vibration bar structure too flexible - possible
- Additional 300 rotations of Unit 3 replacement steam generator due to divider plate repair work - possible
- Thermal-hydraulic and flow induced vibration models used in replacement steam generator design incorrectly predicted replacement steam generator tube bundle behavior – possible

The team observed that the licensee performed a detailed analysis and attempted to address all probable causes. The team observed that some of the conditions which were eliminated as potential contributors may need further evaluation. In particular, the team ~~determined~~believed that the only major difference between Units 2 and 3 was the divider plate repair to both Unit 3 steam generators. This difference had been discounted by both SCE and Mitsubishi. The divider plate is further discussed in Section 12.0 of this report.

~~c. Conclusions~~

The completed SCE cause evaluation identified the mechanistic cause of the tube-to-tube wear as fluid-elastic instability caused by a combination of localized high steam/water velocity, high steam void fraction, and insufficient contact forces between the anti-vibration bars and the tubes. The Mitsubishi thermal/hydraulic model under-predicted the actual thermal/hydraulic conditions in the steam generator and improvements in fabrication between Unit 2 and Unit 3 steam generators led to the reduced contact forces.

2.2 Mitsubishi Cause Evaluation

Form

a. Inspection Scope

The team conducted an overall and independent review of Mitsubishi's actions taken to understand the probable cause of the steam generator tube degradation. While onsite, the inspection team was informed that Mitsubishi was performing a failure analysis to characterize the mechanism causing the tube-to-tube wear condition in Unit 3. The team had periodic discussions with Mitsubishi personnel to gather information on the probable causes under consideration. The team reviewed information contained in the updated final safety analysis report, technical specifications, design basis documents, purchase order specifications, design changes, design drawings, manufacturing changes, nonconformance reports, and supplier deviation reports to understand the design and fabrication of the replacement steam generators and independently assess the information obtained from Mitsubishi's in-progress cause evaluation.

b. Observations and Findings

No findings were identified.

The team determined that Mitsubishi was performing a thorough evaluation of the failure mechanism leading to the tube-to-tube wear in Unit 3. The team noted that Mitsubishi gathered factual information about the design, fabrication, and operation of the replacement steam generators in Unit 2 and Unit 3 to understand the differences between these components and identify potential contributing causes. The team discussed the preliminary failure mechanism theory with Mitsubishi personnel, who attributed the tube-to-tube; wear to a combination of design, fabrication, and operational factors.

Mitsubishi's preliminary explanation of the failure mechanism started with the combination of two factors: (1) a relatively small tube pitch to tube diameter ratio (P/D), and (2) high void fraction in the tube bundle area where the tube-to-tube wear was identified. The small pitch to diameter ratio was a fixed parameter in the replacement steam generators established by the nominal center-to-center distance between adjacent tubes (P) and the nominal outside diameter of the tubes (D). The high void fraction was identified from the results of Mitsubishi's thermal-hydraulic model for the secondary side of the replacement steam generators. Mitsubishi considered that the combination of these two factors may have resulted in favorable conditions for in-plane tube vibration based, in part, on the results of recent studies in fluid-elastic instability.

Additionally, Mitsubishi identified that the Unit 3 replacement steam generators had better dimensional controls during the fabrication process. This determination was based, in part, on the results of pre-service and in-service eddy current examinations, and fabrication data from Unit 2 and Unit 3 replacement steam generators. The correlation of dimensional controls with the failure mechanism was that improved dimensional controls for Unit 3 replacement steam generators resulted in less variability of as-built critical dimensions such as anti-vibration bar thickness, tube roundness, and gaps between tubes and anti-vibration bars. Condition Report 201836127, Cause Evaluation, Revision 0, lists one of the mechanistic causes of the tube-to-tube wear to be associated with the reduction in dimensional variability that resulted in less contact force between the tubes and the anti-vibration bars.

The failure mechanism model also considered a fluid dynamic effect associated with the spreading of the tubes in the U-bend region during normal operating conditions. This effect was informally referred to as "flowering," due to the characteristic shape in which the tube bundle spreads transverse to the plane of the u-bends at normal operating conditions. "Flowering" was described as the elastic deformation of the anti-vibration bar structure and the tube bundle in the U-bend region, as a result of thermal expansion and fluid dynamic pressure acting on the secondary side of the tubes (see figure below). The deformation caused by the "flowering" effect was believed to result in multiple areas of no contact between the anti-vibration bars and the tubes, which minimized resistance to in-plane motion of the u-bend area of the tubes.

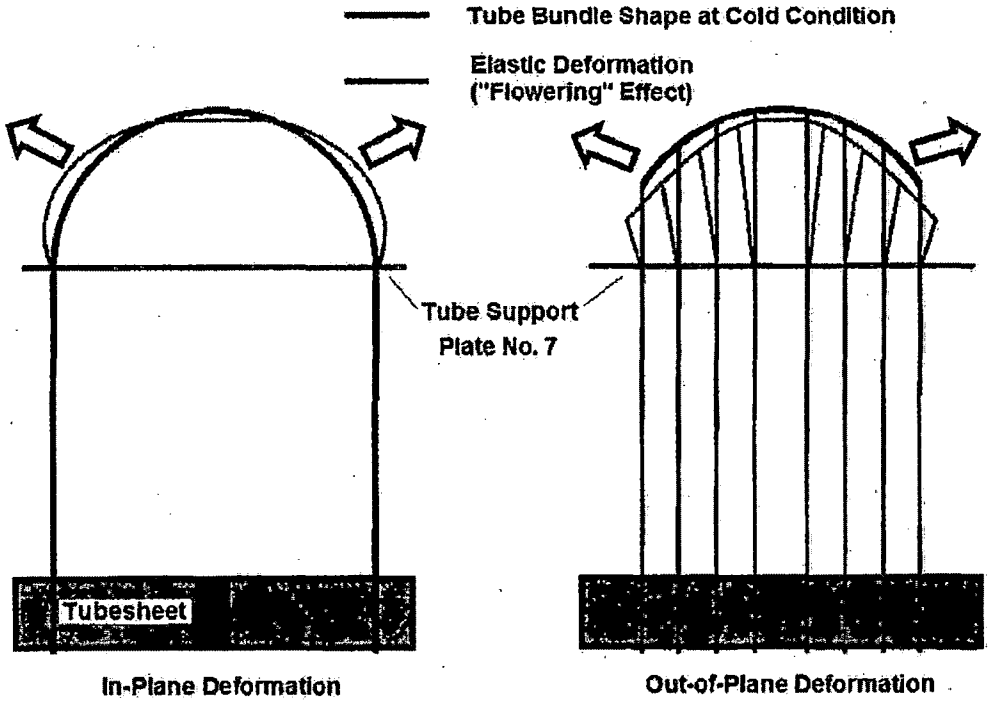


Description of "Flowering" Effect (Conceptual Drawing – For Illustration Purposes Only)

Form

Mitsubishi considered that the collective contribution of the factors described above resulted in conditions in the U-bend that were highly susceptible to excessive tube vibration. The in-plane vibration of the tubes in the U-bend region allowed direct contact between free-span sections of the tubes, resulting in the unanticipated tube-to-tube wear.

At the conclusion of the onsite portion of this inspection, Mitsubishi was further evaluating the failure mechanism by conducting in-depth analyses of available data to validate their failure mechanism theory. One of the analyses included analytical studies of the impact of anti-vibration bar gap size, free-span length, fluid-elastic vibration, and contact forces on tube wear depth. An expected outcome of this analysis was that contact forces and the number of inactive supports should be the biggest contributors to wear under fluid-elastic instability conditions. Additionally, Mitsubishi was conducting further analytical studies of the "flowering" effect by modeling multiple cases of elastic displacement of the tube bundle structure, taking into consideration thermal expansion and dynamic pressures. Concurrent with these analyses, Mitsubishi was studying the effect of manufacturing dispersion on tube wear. Specifically, Mitsubishi was modeling multiple cases of manufacturing variability to study the influence of different dimensional controls on gap and contact forces. Mitsubishi was using as-built data as well as manufacturing tolerances to statistically assess the impact of dimensional controls on the resulting gaps and contact forces in different areas of the tube bundle. ~~Based on the data reviewed by the team, the standard deviation of the tube ovality (G value) decreased during each successive fabrication run of the steam generator tubes (order of tube fabrication -> U2E0-89, U2E0-88, U3E0-89, and U3E0-88).~~ One of the expected

outcomes of this analysis was that manufacturing variability in Unit 3, in combination with the "flowering" effect, would result in a reduction of contact forces in Unit 3 relative to those in Unit 2. During the on-site portion of this inspection, the results of these studies were not finalized and additional failure analysis tasks were scheduled to accurately characterize the failure mechanism and support the cause determination.

~~c. Conclusions~~

At the time of the exit, Mitsubishi was still completing their independent cause analysis. ~~The team was unable to evaluate this aspect; however~~As part of the Confirmatory Action Letter inspection, the final Mitsubishi cause evaluation will be reviewed ~~as part of the Confirmatory Action Letter inspection. No conclusions were reached with regard to the Mitsubishi cause evaluation at this time.~~

3.0 Operational Differences in Configuration and Operation between Unit 2 and 3 (Charter item 3)

a. Inspection Scope

The team reviewed Unit 2 and 3 Cycle 16 operational data records found in operator logs and the plant computer system. The team focused on differences in configuration and operation between Units 2 and 3. The team evaluated full power operational data between Unit 2 and Unit 3 steam generators after each were replaced. From this data the team compared key plant parameters and other indications such as temperature, flow, power, pressure, and vibration and loose parts monitoring alarms. The team reviewed operational differences between Units 2 and 3 in order to gain information and to assess if these differences could have had an impact on the observed differences in the steam generator tube wear between the units.

b. Observations and Findings

~~The team~~ No findings were identified ~~one unresolved item for which additional information is required to determine if.~~

The team looked at a ~~performance deficiency exists or if the issue constitutes a violation of NRC requirements. The team also modeled the impact~~ number of operational differences ~~on~~from the ~~predicted~~perspective of the thermal-hydraulic disparities. The team also evaluated the significance of these differences insofar as potential impact to tube degradation. It was noted that Unit 3 ran with slightly higher primary temperatures, about 4°F higher than Unit 2. Other differences were noted in steam and feedwater flow but none~~response~~ of the differences were considered sufficient to significantly affect thermal hydraulic characteristics inside the steam generators.— In addition, the team also identified that Unit 3 steam generators had numerous valid vibration and loose parts monitoring system alarms compared to Unit 2 steam generators.

(1) Introduction: The team identified an unresolved item associated with the number of valid vibration and loose parts alarms observed in Unit 3 steam generators compared to Unit 2 steam generators, during steady state conditions.

Description: During the review of operational differences between Unit 2 and 3 steam generators the team identified a significant difference in number of valid vibration and loose parts monitoring system alarms. The vibration and loose parts monitoring system was designed to provide continuous monitoring and conditioning of loose parts accelerometer signals. Two separate accelerometers were installed on each of the steam generators. The location of these instruments are on the steam generators' lower supporting structures and provide acoustic information about loose parts impacts specifically on the reactor coolant or primary side of the steam generators. The vibration and loose parts monitoring system real time functions consist mainly of impact alarm validation of suspected loose part events and recording acoustic data. Long term vibration monitoring and loose part event trending were done by engineering personnel using recorded data.

Unit 3 returned to service in February 2011, and the resident inspectors noted a number of nuclear notifications associated with Unit 3 steam generators vibration and loose parts monitoring alarms. On January 20, 2012, prior to the Unit 3 tube leak, engineering personnel also identified this trend and documented in Nuclear Notification NN 201818719 this problem and assigned an action to do further evaluation. On February 3, 2012, engineering personnel sent two sets of alarm signatures to Westinghouse, which contained impact data on alarms for time periods of steady state operation (i.e., no major temperature changes). Westinghouse engineering personnel concluded that the acoustic signals picked up by the accelerometers were valid and similar in nature to acoustic signatures caused by thermal movement of a steam generator expected during changes in thermal conditions, such as plant startup or shutdown. However the data obtained and analyzed had been taken during steady state operations. The team noted that Unit 2 steam generators did not receive the same number and type of alarms during a similar period of steady state operations. Engineering personnel also compared hot leg temperature changes linked to Unit 3 operations from February 18, 2011, to January 31, 2012, and confirmed about 30 valid alarms during this period were not associated with thermal transients.

Additional review and follow up will be required of the vibration and loose parts monitoring system alarms, including evaluation and disposition of Unit 3 alarms and then determine whether this issue represents a performance deficiency or constitutes a violation of NRC requirements. This issue is identified as URI 05000362/2012007-02, "Evaluation of Unit 3 Vibration and Loose Parts Monitoring System Alarms."

(2) ~~Operational Differences~~Introduction: The team performed a number of different thermal-hydraulic analysis of Units 2 and 3 steam generators. The output of the various analyses runs where then compared and reviewed to determine if those differences could have contributed to the significant change in steam generator tube wear. ~~It was noted that Unit 3 ran with slightly higher primary temperatures, about 4°F higher than Unit 2. Other differences were noted in steam and feedwater flow but none of the differences were considered sufficient to significantly affect thermal hydraulic characteristics inside the steam generators. The different analyses included:~~

Description: The NRC conducted a number of different thermal-hydraulic analyses, including:

- Lower bounding thermal hydraulic analysis using the steam generator base design condition, where primary inlet temperature was 598°F, and an upper bound case where primary inlet temperature was 611°F as identified in Mitsubishi Document L5-04GA021, Revision 3
- Varying steam generator pressures from 833 to 942 psia
- Steam mass flow rates from 7.59 to 7.62 Mlbm/hr
- Primary loop volumetric flow rate from 102,000 to 104,000 gpm, and
- Recirculation ratio from 3.2 to 3.5.

c. ~~Conclusions~~

~~The team identified one unresolved item associated with SCE's evaluation of the Unit 3 loose parts monitoring alarms.~~

The result of the independent NRC thermal-hydraulic analysis ~~indicated~~concluded that differences in the actual operation between units and/or individual steam generators had an insignificant impact on the results and in fact, the team did not identify any changes in steam velocities or void fractions that could attribute to the differences in tube wear between the units or steam generators. It should be noted that increases in primary temperature and steam generator pressures has the effect of reducing void fractions and peak steam velocities, which slightly decreases the conditions necessary for fluid elastic instability and fluid-induced vibration.

4.0 Design and Manufacturing Differences (Charter Item #4) (Mitsubishi Charter Item 1)

During the development of the charter, it was not known how SCE and Mitsubishi reviewed and approved design and manufacturing changes. During the inspection, it was identified that all design and manufacturing changes proposed by Mitsubishi required review and approval from a SCE representative. Based on this, it was determined that this area could be covered as one item.

a. Inspection Scope

The team interviewed licensee and Mitsubishi personnel involved in the design and fabrication of the replacement steam generators and reviewed information including nonconformance reports, design drawings, fabrication procedures, design changes, engineering evaluations, supplier deviation requests, and design specifications to identify conditions affecting quality that resulted in relevant design differences between the replacement steam generators. The team assessed whether these differences could be considered as contributing factors for the cause of the tube-to-tube wear issue in Unit 3. The team also reviewed Engineering Change Packages 800071702 and 800071703 for the Unit 2 and Unit 3 replacement steam generators, respectively, with emphasis on changes made to the design methodology described in the updated final safety analysis report for the original steam generators to verify that the evaluation was performed in accordance with licensee procedures and the provisions of 10CFR 50.59, "Changes,

Tests, and Experiments."

b. Observations and Findings

No findings were identified.

The team identified two unresolved items for which additional information is required to determine if performance deficiencies exist or if the issues constitute violations of NRC requirements. The team also identified several observations related to the design, fabrication, and the engineering change package for the Unit 2 and Unit 3 replacement steam generators.

~~(1)~~1) Introduction: The team identified an unresolved item associated with the design of the retainer bars in Unit 2 and Unit 3 replacement steam generators.

Description: In February 2012, the licensee identified wear indications in Unit 2 replacement steam generators at the tube locations in contact with the retainer bars (see figure below). Some of the indications showed excessive wear with a maximum degradation of 90 percent through wall.

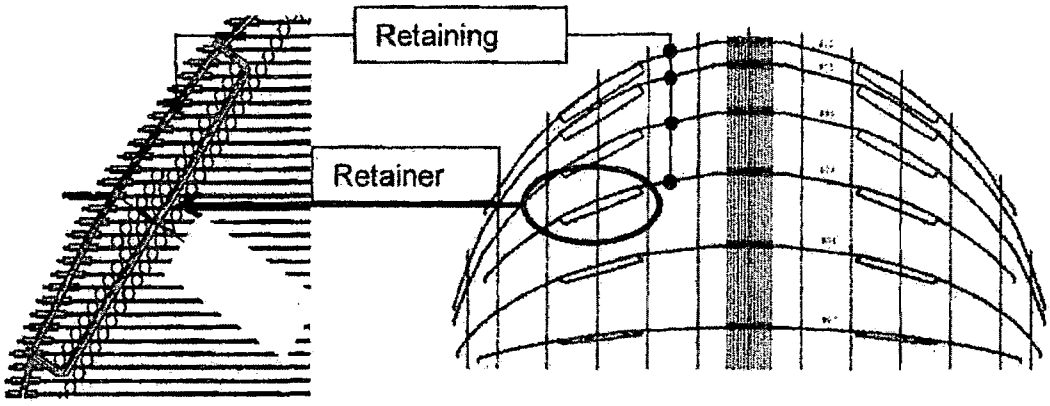


Retainer Bar Design and Location of Affected Tubes (For Illustration Purposes Only)

The team identified that the design of the replacement steam generators did not expect any potential vibration concerns in the area of the tube bundle where the retainer bars were located. The basis for Mitsubishi's design philosophy relied on the following factors:

- Based on the calculated natural frequency of the retainer bar, Mitsubishi considered that there would not be a resonant vibration condition relative to the flow conditions in the location of retainer bars.
- The vibration analysis of the tube bundle only considered out-of-plane vibration because in-plane vibration was not expected to be an operational concern for the retainer bars.

- The outermost tubes were considered the least susceptible to flow-elastic instability; therefore retainer bar locations were not included in the vibration analysis.
- Fluid-elastic instability was found not applicable to the retainer bar because this mechanism did not apply to a single tube in cross flow.
- Vortex-induced vibration was found not applicable to the retainer bar because it was considered a vibration mode applicable to a single cylinder in uniform cross flow in a large area and the flow condition around the retainer bars was considered slug-froth two phase flow.

However, upon identification of retainer bar-to-tube wear in Unit 2 replacement steam generators, Mitsubishi performed an evaluation to identify the cause of excessive wear. The analysis considered three vibration mechanisms: fluid-elastic instability, vortex-induced vibration, and turbulence-induced vibration (random vibration). The analysis for turbulence-induced vibration determined that random vibration was the possible cause of the retainer vibration, based on the peculiar flow around the retainer bar, combined with the rather low natural frequency of the retainer bar. The analysis used the two phase flow conditions around the retainer bars and identified various modes of vibration at those flow conditions that could lead to retainer bar vibration and consequently to tube wear.

Additional review by the NRC is required following completion of the ~~Mitsubishi's~~licensee's cause evaluation to determine whether this issue represents a performance deficiency or constitutes a violation of NRC requirements. This issue is identified as URI 05000362/2012007-03, "Evaluation of Retainer Bars Vibration during the Original Design of the Replacement Steam Generators."

~~(2)~~2) Introduction: The team identified an unresolved item associated with the dimensional controls of critical dimensions throughout the fabrication of Unit 2 and Unit 3 replacement steam generators.

Description: Based on the information gathered by the team on the differences in dimensional controls of critical parameters in Unit 2 and Unit 3 replacement steam generators, the team determined that Mitsubishi did not consider the potential impact of improving dimensional controls for tube roundness and anti-vibration bars on the final tube bundle clearances at normal operating conditions.

Additional review by the NRC is required following completion of ~~Mitsubishi's~~the licensee's cause evaluation to fully assess how the dimensional controls contributed to the tube-to-tube wear in Unit 3 and then determine whether this issue represents a performance deficiency or constitutes a violation of NRC requirements. This issue is identified as URI 05000362/2012007-04, "Evaluation of Changes in Dimensional Controls during the Fabrication of Unit 2 and Unit 3 Replacement Steam Generators."

~~(3)~~3) Design Differences: The team did not identify any significant differences in the design requirements of Unit 2 and Unit 3 replacement steam generators. The "Conformed Specification for Design and Fabrication of the Replacement Steam Generators," also known as the design specification, contained identical technical

requirements for Unit 2 and Unit 3 steam generators. All replacement steam generators were required to be designed, fabricated, and tested in accordance with the ~~1998~~2007 edition of the American Society of Mechanical Engineers (ASME) Boiler and Pressure Vessel Code~~, with the 2000 Addenda~~, industry standards, and NRC endorsed methods described in applicable regulatory guides. The licensee specified the same licensing requirements for all replacement steam generators.

The design specification also contained provisions to address technical or quality deviations from the requirements of the purchase order or the design specifications, including the disposition of "Repair" or "Accept as-is" conditions captured as non-conformance reports in Mitsubishi's quality assurance program and changes to documents previously approved by the licensee. This process was referred to as "Supplier Deviation Request" and allowed the licensee to review and approve deviations from the approved design specifications. The team noted that changes affecting the specified design were submitted to SCE personnel for review and approval.

The team noted that the design specification established identical provisions for the design of the replacement steam generator components including the vessel, upper/lower shell, transition cone, tubesheet, channel head, divider plate, tube supports, tubing, steam nozzle, feedwater nozzle, primary nozzles, steam flow limiting device, moisture separators/dryers, feedwater distribution system, blowdown and sludge management, access/inspection ports, instrument/sampling taps, and loose part monitoring.

The design specification also established identical requirements for the service life and service environmental conditions of the replacement steam generators. The licensee also specified identical design loading, structural, and seismic requirements for all replacement steam generators. The design specification contained identical requirements for design transients under normal, upset, emergency, faulted, and test conditions.

Additionally, the performance requirements in the design specification were identical for each replacement steam generator, which included:

- Water Level Stability
- Circulation Ratio
- Moisture Carryover
- Steam Carryunder in the Downcomer Annulus
- Reactor Coolant Flow Rate
- Primary-To-Secondary Leakage
- Blowdown Capacity
- Thermal Rating
- Heat Transfer Surface Area
- Tube Plugging Margin
- Fouling Factor
- Overall Heat Transfer Coefficient
- Primary Side Design and Operating Pressure/Temperatures

- Secondary Side Design and Operating Pressures/Temperatures
- Primary Side Design and Operating Flows
- Secondary Side Design and Operating Flows
- Tube Material and Dimensions

The replacement steam generator design developed by Mitsubishi for SONGS Unit 2 and Unit 3 in accordance with the licensee's design specification was translated into the same set of design and fabrication drawings. The team noted that some as-built dimensions varied between Unit 2 and Unit 3 steam generators as a result of the divider plate weld repairs in Unit 3 and other manufacturing processes. However, these dimensional changes did not represent significant deviations from the original design specifications. Therefore, the team determined that no significant differences existed in the design requirements of Unit 2 and Unit 3 replacement steam generators.

(4)4) Fabrication Differences: The team noted that the design specification contained the same general fabrication requirements for the Unit 2 and Unit 3 replacement steam generators. The design specification contained the methods required for fabrication, assembly, inspection, and testing of the replacement steam generators. The specification covered, in part, fabrication requirements for the channel head cladding, tube dimensions, tube wall thickness, tube bend radius, tube "ovality," tubesheet, tube-to-tubesheet joints, tube supports, tube bundle, machined gasketed surfaces, non-ASME steam generator internals, welding methods, post-weld heat treatment, and allowable welding materials. The specification also contained detailed requirements for inspections, tests, and examinations, which included examination methods and personnel qualification requirements.

The design specification also required the use of "Supplier Deviation Requests" to address technical or quality deviations from the requirements of the Purchase Order or the design specifications, including the disposition of "Repair" or "Accept as-is" conditions identified during the fabrication process and changes to fabrication documents previously approved by the licensee. The team noted that fabrication issues affecting the specified design were submitted to SCE personnel for review and approval.

Based on discussions with SCE and Mitsubishi personnel and the review of documentation about the fabrication history of Unit 2 and Unit 3 replacement steam generators, the team identified the differences listed below. At the conclusion of the onsite portion of this inspection, the differences between Unit 2 and Unit 3 steam generators as a result of the fabrication process were under consideration for the cause evaluation.

- Steam Dryer Assembly – During the fabrication of Unit 2 steam generator 2E0-89, Mitsubishi identified a nonconforming condition of the steam dryer assembly that included damaged locking plates of vane jacking devices, displaced bolts, and damaged vanes. The cause of this issue was determined to be inadequate evaluation and control of the design ~~within~~ regard ~~to~~ the capacity of the vane jacking devices to sustain all fabrication conditions. Specifically, the vane jacking

devices failed to stay in the design position during multiple rotations of the steam generator assembly during fabrication. Mitsubishi corrected the condition, in part, by replacing all vane jacking devices and damaged vanes with a new design, which was also used in the fabrication of the Unit 2 steam generator 2E0-88, and Unit 3 steam generators 3E0-89 and 3E0-88. Additionally, Mitsubishi modified the assembly sequence of the steam dryers. For Unit 2 steam generator 2E0-89, the steam dryer vanes were assembled in-situ while the steam dryers for Unit 2 steam generator 2E0-88 and Unit 3 steam generators 3E0-88 and 3E0-89 were preassembled before installation in their final position.

- Drilling of Tubesheet Holes – The tubesheet holes in Unit 2 and Unit 3 steam generators where the tubes are inserted for final assembly were made with different drill bits. The Unit 2 steam generator tubesheets were drilled with uncoated drill bits. The Unit 3 steam generator tubesheets were drilled with titanium-nitride coated drill bits, which improved the drill bit life and resolved tooling mark issues experienced in Unit 2.

- Transition Wrapper Welding – The welding of the transition wrapper was performed in different order for each unit. For Unit 2 steam generators, the transition wrapper was welded after the tubes and anti-vibration bars were installed. In Unit 3 steam generators, the transition wrapper was welded before the installation of tubes and anti-vibration bars.

- Cladding Removal Process for the Channel Head – The removal of the stainless steel clad weld from the interior surface of the channel head base metal in preparation for the divider plate weld (i.e. structural butter weld) was performed with different methods in Unit 2 and Unit 3 replacement steam generators. For Unit 2, Mitsubishi used a machining process to remove the cladding in both steam generators. In Unit 3, Mitsubishi used an air carbon-arc gouging process. This method resulted in separation of the butter weld during hydrostatic testing. The root cause evaluation concluded that the air carbon-arc gouging process left carbon deposits on the base metal. Gouging was followed by grinding which was designed to remove the heat affected zone and expected to completely remove the carbon deposits. However, the grinding process left carbon deposits behind, which resulted in the localized areas of high carbon and high base metal hardness due to carburization. The repair of the Unit 3 divider plate welds is addressed in further details in Section 12.0 of this report.

- Helium Leak Test – As part of the fabrication process, Mitsubishi performed a Helium-Nitrogen leak test on the secondary side of the replacement steam generators to check for leaks on the tube-to-tubesheet welds. For all steam generators, this test was performed after completion of the tube-to-tubesheet weld, but prior to the penetrant examination of the tube-to-tubesheet welds and final tube expansion. The leak tests for Unit 2 steam generators were performed at a higher pressure than Unit 3 steam generators. Additionally, the Unit 2 tests were performed using a temporary welded cap on top of the steam generator shell to enclose the secondary side, while a temporary clamped cap was used in

Unit 3 steam generators. All tests required the same holding time before starting the test and the same leak rate acceptance criteria.

- Preliminary and ASME Section III Hydrostatic Tests – The number of hydrostatic tests performed in accordance with ASME Section III on the primary and secondary sides of the replacement steam generators varied between Units due to the results of the initial test in each steam generator. For each replacement steam generator, the hydrostatic tests were performed first on the primary side and then on the secondary side. Both Unit 2 steam generators met the acceptance criteria in the first hydrostatic test. However, during the first hydrostatic test on the secondary side of Unit 3 steam generator 3E0-89, Mitsubishi identified leakage through a tube-to-tubesheet weld that exceeded the ASME Code acceptance criteria. After repairs were completed to address the leakage, the hydrostatic tests were re-performed. Following the second set of hydrostatic tests on Unit 3 steam generator 3E0-89, cracking indications were identified in the divider plate-to-channel head weld. After repairs were completed to address the divider plate weld cracks, a third set of hydrostatic tests were performed in Unit 3 steam generator 3E0-89. Since similar cracking indications of the divider plate weld were identified in Unit 3 steam generator 3E0-88, a second set of hydrostatic tests was performed in this steam generator after the divider plate weld was repaired.

  Additionally, prior to each ASME Section III hydrostatic test, Mitsubishi performed a preliminary hydrostatic test of the primary and secondary side of the steam generators at design pressure to check for leakage at the feed pump, pressure filling line, temporary gaskets, and temporary seals. Therefore, each replacement steam generator received an equal number of preliminary and ASME Section III Hydrostatic Tests. The total numbers of hydrostatic tests for each steam generator are summarized below.

| **Number of Preliminary and ASME Section III Hydrostatic Tests** | | | |
|---|---|---|---|
| **Steam Generator** | **Primary Side** | **Secondary Side** | **Results** |
| 2E0-89 | 1 | 1 | Acceptance criteria met |
| 2E0-88 | 1 | 1 | Acceptance criteria met |
| 3E0-89 | 1 | 1 | Leakage detected in tube-to-tubesheet weld |
| | 1 | 1 | Divider plate weld separation weld identified |
| | 1 | 1 | Final – Acceptance criteria met |
| 3E0-88 | 1 | 1 | Divider plate weld separation weld identified |
| | 1 | 1 | Final – Acceptance criteria met |

- Pre-Service Inspection – The design specification established similar requirements for the pre-service eddy current examination of Unit 2 and Unit 3 replacement steam generators. The team noted that the eddy current

examinations of Unit 2 and Unit 3 steam generators were performed with similar eddy current techniques, including essential variables. However, the circumstances in which the examinations were performed varied for each Unit. For Unit 2, the pre-service examination was performed after the steam generators were delivered at the SONGS jobsite. The steam generators were examined on the shipping saddles, where the position of the tube bundle was at 45 degrees from the gravity neutral position. This position was dictated by the location of the steam generator lifting trunnions which were installed on the upper shell at 45 degree orientation from the steam generator centerline. For Unit 3, the pre-service eddy current examination was performed at the Mitsubishi Kobe facility while the steam generators were still on the fabrication rollers and in the gravity neutral position (i.e. divider plate oriented horizontally). The decision to perform the Unit 3 pre-service examination at the Mitsubishi facility was dictated by delivery schedule considerations resulting from the divider plate weld repairs.

- Flow Limiter for Primary Inlet Nozzles – The replacement steam generators were designed with a flow limiter located in the primary inlet nozzle (see figure below) in order to make the reactor coolant system flow similar to the flow rate of the original steam generator and not exceed the maximum allowable reactor coolant system flow rate. The licensee's evaluation for the engineering design package determined that although the original steam generators had a number of plugged tubes, the reactor coolant system flow rate of the original steam generators was near the design requirement. Because the replacement steam generators has 377 more tubes than the original steam generators, and contained tubes with u-bends versus "square bends", the pressure drop of the replacement steam generators with no plugged tubes would be much less than the original steam generators resulting in a higher flowrate.

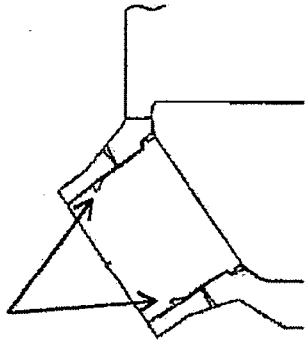


**Replacement Steam Generator Primary Inlet Nozzle (For Illustration Purposes Only)**

The flow limiter was designed to ensure the total "best estimate" reactor coolant flow rate with the replacement steam generators installed would not exceed 106.5 percent of the design volumetric flow rate of 396,000 gallons per minute at a reactor coolant system cold leg temperature of Tcold = 540.9°F. For Unit 2 replacement steam generators, the flow limiter diameter to nozzle inner diameter ratio was 0.94 while the ratio for Unit 3 steam generators was 0.915 due to Unit 3? reactor coolant pump replacement. The flow limiter dimensions resulted from

a scaled model test performed by Mitsubishi and it was designed to be machined as part of the nozzle base metal.

- Pitch Distance of Tube Support Plate Drilled Holes in Unit 2 Steam Generator 2E0-89 – During fabrication of the tube support plates for Unit 2 steam generator 2E0-89, quality control inspections identified unacceptable measurements of the pitch distance between drilled holes. Mitsubishi fabrication procedures required verification of the total center-to-center distance between ten inline drilled holes at certain sample points of the tube support plate. The dimensional verification checks identified a total of 200 measurements in tube support plate number 3 and 10 measurements in tube support plate number 6 that did not meet the dimensional acceptance criteria established in the fabrication procedures. Mitsubishi evaluated this non-conformance condition and accepted the condition "as-is" with the SCE's approval. The technical justification for accepting the condition addressed four elements: (a) the impact of the condition on the ability to insert the tubes through the affected areas of the tube support plates, (b) resulting stress on the tubes after insertion, (c) impact of the condition on the tube to anti-vibration gap size, and (d) possible occurrence of tube scratch during inspection. Similar unacceptable measurements were not identified in Unit 2 replacement steam generator 2E0-88 or Unit 3 replacement steam generators 3E0-89 and 3E0-88.

- Tube-to-Tube Clearance in Unit 2 steam generator 2E0-89 – During fabrication of Unit 2 replacement steam generator 2E0-89, interference checks identified that the clearance between the tubes in Rows No. 28 and 30 in Column No. 22 was less than the minimum clearance of 0.13-inch specified in Mitsubishi's inspection procedure. The condition was accepted "as-is" by Mitsubishi and SCE through the supplier deviation request process. The main considerations of the technical evaluation included: (a) thermal expansion difference, (b) tube expansion due to operating pressures, (c) tube displacement due to out-of-plane flow induced vibration, and (d) tube displacement due to seismic acceleration. The team noted that no tube-to-tube wear indications were identified in this area of the tube bundle.

- Anti-Vibration Bar Spacing Issues in Unit 2 Steam Generator 2E0-89 – During fabrication of Unit 2 replacement steam generator 2E0-89, quality control inspections identified unacceptable gaps between tubes and the anti-vibration bars in the outside tube columns. The affected area was identified as welding zone-4. The apparent cause for the anti-vibration bar spacing issue was due to performing the welding of zone-4 while the steam generator was oriented horizontally with this welding zone oriented to the bottom of the bundle. In this configuration, the tube bundle experienced sagging at the time of welding due to gravity. After completion of welding zone 4, the steam generator assembly was rotated 180 degrees for additional assembly steps, but the sagging in the opposite direction caused enlargement of the gaps in welding zone 4 and this enlargement remained approximately the same for all subsequent rotations. When zone-4 was rotated 180-degrees after welding, deflection or sagging of the tube retaining bars due to gravity slightly pulled the anti-vibration bars, increasing the gap between the tube and the anti-vibration bars in this zone.

With the licensee's approval, Mitsubishi implemented various corrective actions to address the condition in the pending Unit 2 replacement steam generator 2E0-88 and subsequently in Unit 3 steam generators which included: (a) use of smaller spacer blocks between tubes for the installation of anti-vibration bars, (b) re-define the welding zones to limit welding in the horizontal position, and (c) reduce rotations during welding of the other bundle zones. Mitsubishi performed rework activities in Unit 2 steam generator 2E0-89 to restore anti-vibration bar spacing to design specifications. These activities resulted in better gap distribution. All the tube-to-anti-vibration bar gaps exceeding the initial dimensional criteria were further evaluated and accepted in accordance with Mitsubishi's gap size evaluation procedure.

- Rotations of Steam Generator Assembly for Anti-Vibration Bar Installation and Welding – The team noted that welding of anti-vibration bars structure required rotating the steam generators several times. As a result of the corrective actions generated to address the anti-vibration bar spacing issues in Unit 2 steam generator 2E0-89, the installation procedure was revised to reduce the number of rotations for anti-vibration bar installation to attain better gap control. This procedure revision resulted in different number of rotations in each replacement steam generator. Steam generators Unit 2 E0-89, Unit 2 E0-88, Unit 3 E0-89, and Unit 3 E0-88 received 11.25, 4, 3.5, and 3.5 rotations, respectively, during installation of the anti-vibration bars structure.

- Temporary Installation of Plastic Ties – In order to limit the displacement of anti-vibration bars during rotation of the steam generator assembly for welding of the anti-vibration bars structure, Mitsubishi revised the installation procedure to install temporary plastic ties between the retaining bars and the tubes. This step of the anti-vibration bar assembly process was performed in a different sequence for Unit 2 and Unit 3 steam generators. For Unit 2, the installation of plastic ties occurred after welding the transition wrapper, the Helium leak test, and tube hydraulic expansion, but before welding the channel head to the tubesheet, the hydrostatic tests, and the pre-service inspection. In Unit 3, the installation of plastic ties was performed between welding the transition wrapper and the Helium leak test.

- Dimensional Controls of Anti-Vibration Bar Structure – According to Mitsubishi's preliminary cause evaluation taking place at the time of this inspection, the controls of critical dimensions affecting the clearances between the tube and the anti-vibration bars were gradually improved throughout the fabrication of the Unit 2 and Unit 3 steam generators. This improvement on dimensional controls was a consideration for the determination of the failure mechanism leading to tube-to-tube wear in Unit 3.

  The first dimensional control under consideration was the improvement of tube roundness in the section of the tubes that was bent to form the U-bend shape. During fabrication of Unit 2 steam generator 2E0-89, the supplier of tubular product for Mitsubishi (i.e. Sumitomo), experienced quality issues to meet the G-values established in the design specifications, resulting in a high number of tube

rejections. The G-value was a measure of departure from roundness, or "ovality," after the tubes were bent and it was controlled in order to control the gap between tubes and anti-vibration bars (see figure below). The G-values were measured at different locations along the U-bend section of the tubes for a selected number of tubes per row, as established in Mitsubishi's procedure. The acceptance criteria for G-value varied depending on the row where the tubes were installed. The acceptance criteria also remained the same throughout the fabrication of Unit 2 and Unit 3 replacement steam generators.

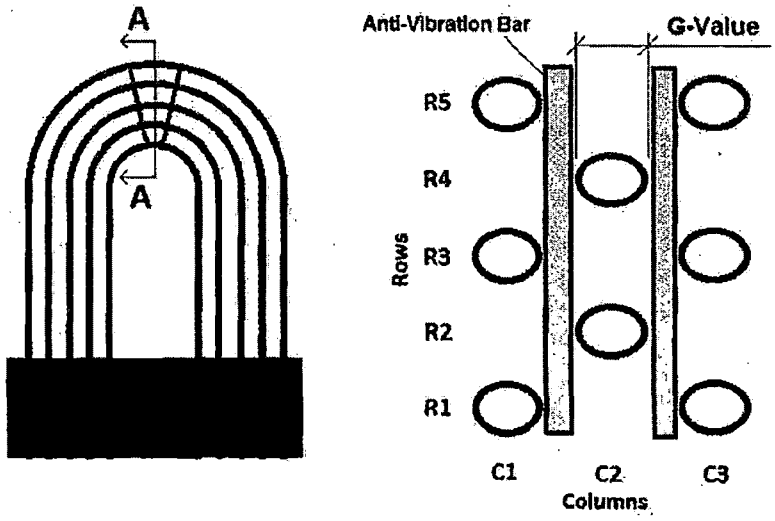


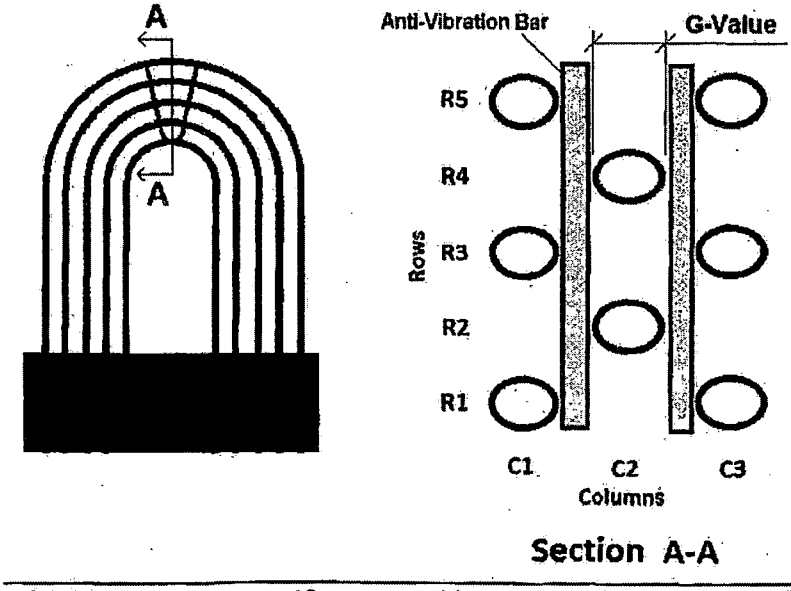


Description of G-Value Parameter (Conceptual Drawing – For Illustration Purposes Only)

Based on discussions with licensee personnel and documentation reviews, the team noted that Sumitomo implemented measures to improve the quality of the

tube bending process which resulted in less deviation of G-values and a reduction in the amount and variability of tubing "ovality." Based on the statistical analysis of G-value data collected during fabrication of the Unit 2 and Unit 3 steam generators, Mitsubishi concluded that the G-values ~~standard deviation~~ gradually decreased since the fabrication of the first steam generator.

Another dimensional control under consideration was the variability of anti-vibration bar dimensions. Mitsubishi's fabrication procedures required inspection of various dimensions of the anti-vibration bars to control the gap between the anti-vibration bars and the tubes. These dimensions were: thickness in the straight sections, twisting and flatness of the straight sections after bending, and thickness of the anti-vibration bar tip (i.e. nose) after bending. Among these dimensions, the twisting and flatness of the straight sections after bending were verified using a "Go or No-Go" approach based on the acceptance criteria in Mitsubishi's procedures but no specific measurements were required to be maintained by procedure. Additionally, the acceptance criteria for anti-vibration bar dimensions remained the same throughout the fabrication of Unit 2 and Unit 3 replacement steam generators. Mitsubishi conducted a preliminary statistical analysis of the available dimensional data for anti-vibration bars and the team concurred that there were minor differences in the statistical distribution of these dimensions in Unit 2 and Unit 3 steam generators.

Comn
any de

[gew]l
inform

Engineering Change Package (10 CFR 50.59): The team determined that the licensee's evaluation for changes in the updated final safety analysis report's design methodologies for the replacement steam generators was consistent with SONGS procedures for the implementation of 10 CFR 50.59 requirements. The licensee's evaluation contained in Engineering Change Packages 800071702 and 800071703 for the Unit 2 and Unit 3 replacement steam generators, respectively, determined that the replacement of the original steam generators did not affect the current licensing basis to the extent of needing prior approval from the NRC as required by 10 CFR 50.59.

In the 50.59 screening evaluation associated with the engineering change package for the Unit 2 and Unit 3 replacement steam generators, the licensee determined that the proposed activity did not adversely affect a design function, or the method of performing or controlling a design function described in the updated final safety analysis report. The licensee also determined that the steam generator replacement activity did not change a procedure in a manner that adversely affected how an updated final safety analysis report design function is performed or controlled. Additionally, the licensee determined that the steam generator replacement activity did not involve a test or experiment not described in the updated final safety analysis report. The licensee evaluated the following updated final safety analysis report design functions in the 50.59 screening:

- Steam Generator Design Functions
- Reactor Coolant System Structural Integrity
- Emergency Core Cooling System Performance
- Non-Loss of Coolant Accident Transients

- Containment Pressure-Temperature Analysis
- Low Temperature Overpressure Protection
- Reactor Protection System, Engineered Safety Features Actuation System, Core Operating Limit Supervisory System, and Core Protection Calculations
- Nuclear Steam Supply System Performance
- Non-Safety Related Control Systems Performance

However, the 50.59 screening evaluation identified three methods of analysis described in the updated final safety analysis report that were affected by the proposed steam generator replacement and required further evaluation against the criteria in 10 CFR 50.59. The affected methodologies are described below:

- Seismic Analysis of Reactor Vessel Internals – The original analysis of SONGS Unit 2 and Unit 3 reactor vessel internals with the original steam generators was performed with the methodology described in Combustion Engineering Topical Report CENPD-178, "Structural Analysis of Fuel Assemblies for Combined Seismic and Loss of Coolant Accident." Subsequent to the submittal of this report, Combustion Engineering revised the methodology by modifying modeling techniques, computer codes, testing methods, and acceptance criteria in response to changes in licensing requirements. Consequently, the original report was resubmitted to the NRC as CENPD-178-P, Revision 1-P, August 1981. This revision was approved by the NRC in a Letter from H. Bernard to A. Scherer, "Acceptance for Referring of Licensing Topical Report CENPD-178," dated August 6, 1982. The licensee used this revised methodology for the replacement steam generators and considered it as a methodology approved by the NRC for the intended application.

- Reactor Coolant System Structural Integrity – The structural analysis of the original steam generators used ANSYS software for the thermal and stress analyses while the replacement steam generators were analyzed using ABAQUS software. ANSYS was described in the updated final safety analysis report as a large-scale, general-purpose, finite element program for linear and nonlinear structural and thermal analysis of the reactor coolant loop components. The licensee considered ABAQUS to be similar to ANSYS. The licensee compared both programs using thermal and stress sample problems. The comparison demonstrated that the results varied from theoretical solutions by no more than 1 percent, and ABAQUS and ANSYS results themselves were also within 1 percent of each other. The variability of results was determined to be within the margin of error for the subject type of analysis.

- Tube Wall Thinning Analysis – The original steam generator analysis used CEFLASH computer program for the main steam line break mass-energy blowdown analysis, whereas the replacement steam generator analysis used manual calculations to represent the main steam line break blowdown loads by applying the maximum possible tube differential pressure, which bounded the pressure calculated by CEFLASH.

For loss of coolant accident analysis, the original steam generator used STRUDL computer program to calculate displacement histories and then ANSYS computer program to calculate tube stresses. The tube stresses for the replacement steam generators were determined using ANSYS computer program based on the blowdown forces. For the original steam generators the combination of loads analyzed was primary loop pipe break plus design basis earthquake and main steam line break plus design basis earthquake. For the replacement steam generators, the loss of coolant accident, design basis earthquake, and the main steam line break events were combined as one limiting event, which SCE considered to be a more conservative method of evaluation relative to the original steam generators. The licensee determined that the results of the tube wall thinning analysis for the replacement steam generators were conservative or essentially the same and the methodology used did not represent a departure from a method of evaluation described in the updated final safety analysis report.

Further discussion is contained in Section 13.0 of this report on the methodology used by the licensee for the reactor coolant system structural integrity and tube wall thinning analysis.

The team noted that a key methodology for the design of the original and replacement steam generators was the thermal-hydraulic code used to model the flow conditions in the steam generators. ~~Mitsubishi's FIT-III thermal-hydraulic~~ The original steam generators were designed using ATHOS thermal-hydraulic code while the replacement steam generators were designed with a proprietary code from Mitsubishi (Need to verify this with Joel. Think the generators were designed before ATHOS was developed in 1985). Mitsubishi's code was accepted by SCE for the design of the replacement steam generators. The team noted that the updated final safety analysis report did not specifically describe ATHOS as the ~~thermal-hydraulic~~ code used for the design of the original steam generators and therefore the ~~use of the FIT-III~~change in thermal-hydraulic code did not constitute a change in methodology or a change in an element of a methodology described in the updated final safety analysis report. The updated final safety analysis report did describe the computer code CRIB as the code used to analyze overall steam generator performance. As described in the updated final safety analysis report, CRIB was used to establish the recirculation ratio and fluid mass inventories as a function of power level in the original steam generators.

With regard to the major design changes between the original and replacement steam generators, the updated final safety analysis report did not specify how the original steam generators relied on special design features such as the stay cylinder, tubesheet, tube support plates, or the shape of the tubes to perform the intended safety functions. The description of the original steam generators was focused on the overall thermal performance characteristics and the applicable codes and standards used for fabrication. The updated final safety analysis report provided a brief description of the egg-crate tube support plate design and its function to prevent concentration of impurities in the tube-to-tube support plate gap, which could lead to tube degradation. The updated final safety analysis report also described degradation issues of the egg-crate tube support plate design as a result

of flow-accelerated corrosion and the corrective actions taken to mitigate this degradation mechanism.

Regulatory Guide 1.187, "Guidance for Implementation of 10 CFR 50.59, Changes, Tests, and Experiments," November 2000, allows the use of NEI 96-07, "Guidelines for 10 CFR 50.59 Implementation," Revision 1 for methods that are acceptable for complying with 10 CFR 50.59. Per NEI 96-07, changes affecting structures, systems, or components that are not explicitly described in the updated final safety analysis report can have the potential to adversely affect structure, system, or component design functions that are described and thus may require a 10 CFR 50.59 evaluation. Consistent with this guidance, SCE's 50.59 screening evaluated the differences in subcomponents between the original steam generators and replacement steam generators as to whether the differences adversely affected the design function (reactor coolant pressure boundary) of the steam generators. The replacement steam generators were designed and fabricated in accordance with quality assurance requirements, and 10 CFR 50.59 does not require the licensee to presume deficiencies in the design or fabrication.

~~c. Conclusions~~

~~The team determined that no significant differences existed in the design requirements of Unit 2 and Unit 3 replacement steam generators.~~ Based on the updated final safety analysis report description of the original steam generators, ~~the team determined that the steam generators major design changes were reviewed in accordance~~one unresolved item associated with the ~~10 CFR~~ 50.59 ~~requirements.~~

~~The team~~review was identified ~~two unresolved items:~~

- ~~Evaluation of Retainer Bar Vibration during the Original Design of the Replacement Steam Generators~~
- ~~Evaluation of changes in Dimensional Controls during the Fabrication of Unit 2 and Unit 3 Replacement Steam Generators~~

~~Additionally, an unresolved item related to a change in a method of evaluation used for the stress analysis calculations~~ and is discussed in Section 13.0 of ~~the~~this report.

Form

5.0 Quality Assurance/Quality Control (Charter Item 5) (Mitsubishi Charter Item 4)

The team reviewed numerous documents from both SCE and Mitsubishi (including sub-contractors, such as Sumitomo) associated with the design, fabrication, and manufacturing of the steam generators for both units. The team reviewed SCE and Mitsubishi's quality assurance program, procedures and implementation activities for the control of purchased material, equipment, and services; inspections; procurement document control; and corrective action and nonconformance activities. Specifically, the team reviewed a sample of Mitsubishi nonconformance reports, audit, survey, all SONGS condition action requests, audits, surveillances, stop work orders, and supplier deviation requests associated with the design and manufacturing of the steam generators. The team concluded that these portions of SCE and Mitsubishi's quality

assurance program regarding its safety-related activities were appropriately controlled and implemented.

5.1 SONGS Quality Assurance/Quality Control

a. Inspection Scope

The team reviewed SCE's implementation of their quality assurance program to determine if it complied with the requirements of 10 CFR 50, Appendix B, "Quality Assurance Criteria for Nuclear Power Plants and Fuel Reprocessing Plants." The team reviewed SONGS implementing procedures, quality assurance manual, vendor audits, procurement specifications, corrective action requests, and numerous other documents, as well as interviewed a number of quality assurance/control and engineering personnel to determine the appropriateness of activities affecting quality conducted during fabrication, manufacturing and delivery of the replacement steam generators.

b. Observations and Findings

No findings were identified.

~~(1)~~1) Policies and Procedures for Supplier Selection and Control

The team reviewed Quality Assurance Manual, Section 17.2.7, "Control of Purchased Material and Services," which defines the process used to ensure that purchased material, source material, and subcontracted services conform to applicable codes and standards. Section 17.2.7.2 of the quality assurance manual provided measures for the approval and control of suppliers and describes the methods that SCE uses to conduct technical and quality assurance evaluations of potential suppliers. Specifically, SCE evaluated an audit performed by Dominion (DA 2002-92, "Dominion Audit of Mitsubishi Heavy Industries"). The evaluation was performed and documented in accordance with SONGS policies and implementing procedures that govern the control of purchased material, equipment, and services. The results of SCE Evaluation MHI-01-04, "Evaluation and Review of Contractor, Consultant, Utility or Licensee Audit Report," stated that Mitsubishi was conditionally qualified for the fabrication and design of the replacement steam generators. An audit was performed by SCE when a sufficient quantity of work had been performed to demonstrate implementation of Mitsubishi's quality assurance program. Southern California Edison-'s oversight of Mitsubishi also included verification of Mitsubishi's activities during fabrication, inspections, testing and shipment of the procured item. After approximately 14 months from the initial evaluation SCE removed the conditional qualification based on results from Evaluation MHI-10SV-05, "Source Evaluation Report of MHI," dated February 8, 2006, and MHI-3SV-06, "Source Verification Report of MHI," dated May 3 2006, and implementation and verification of specific corrective actions. Part of the SONGS oversight plan of Mitsubishi included the placement of SCE quality assurance/quality control personnel (residents) at the Mitsubishi facility. Plan SGR-A10183, "Replacement Steam Generator Resident Oversight Plan," described the roles and responsibilities of the resident management, engineering, and quality oversight implementation strategy for the replacement steam generators. This oversight plan was created to provide

reasonable assurance that the design, licensing, fabrication, delivery, and acceptance of the SONGS replacement steam generators were performed in accordance with specified SCE, industry, regulatory, and Code requirements. The team noted that after the resident was placed at Mitsubishi, Source Verifications and Surveillances performed by SCE decreased. After the NRC team conducted several interviews with the SCE personnel responsible for oversight of Mitsubishi it was determined that the resident provided adequate oversight of Mitsubishi's activities. Nuclear Oversight Division Project Oversight Quarterly Reports were provided by SCE that demonstrated no decrease in SCE oversight of Mitsubishi. These responsibilities were shifted to the resident at Mitsubishi. During the review of the documentation generated by the resident the NRC team noted that the resident was performing these activities on behalf of SCE.

~~(2)~~2) Purchase Order Review

The team reviewed purchase order 6C294014 from Edison Material Supply LLC, issued September 28, 2004, for the design, fabrication, and delivery of four replacement steam generators for SONGS Units 2 and 3. The procurement order stated that all related work was to be performed in accordance with Specification SO23-617-01, "Specifications for Design and Fabrication of RSG for Units 2 and Unit 3." Specification SO23-617-01 identified the codes, standards, regulations and other documents applicable to the design, fabrication, and delivery of the replacement steam generators. For example Specification SO23-617-01 invoked American Society of Mechanical Engineers Boiler and Pressure Vessel Code, American National Standards, American Society for Testing and Materials Standards, and Electric Power Research Institute Technical Report 016743-V2R1, "Guidelines for PWR Steam Generator Tubing Specifications and Repair," among others.

~~(3)~~3) Supplier Audit and Surveillance Reports

The team reviewed a sample of audits and surveillances performed on Mitsubishi to verify SCE's approval process of Mitsubishi and subcontracted services. The team noted that the audits and annual assessments reviewed were adequately documented and provided evidence of Mitsubishi's compliance with quality assurance requirements. The team also verified that audit reports supported the conclusions made by SCE.

5.2 Mitsubishi Quality Assurance/Quality Control

a. Inspection Scope

The team reviewed Mitsubishi implementation of their quality assurance program to determine if it complied with the requirements of 10 CFR 50, Appendix B, "Quality Assurance Criteria for Nuclear Power Plants and Fuel Reprocessing Plants." The team also reviewed a sample of reports from audits and surveys that Mitsubishi conducted of various subcontractors, such as Sumitomo to determine the adequacy of oversight provided by Mitsubishi activities affecting quality and that contracted activities were implemented in accordance with the Mitsubishi-approved quality

assurance program. In addition, the team reviewed Mitsubishi's Approved Suppliers List to verify that vendors listed were qualified according to Mitsubishi's specifications and that the list was maintained current.

b. Observations and Findings

No findings were identified.

~~(1)~~1) Policies and Procedures for Supplier Selection and Control

Form

The team reviewed Mitsubishi Quality Assurance Manual, Section 4, "Procurement Control," of the which defines the process used to ensure that purchased material, source material, and subcontracted services conform to the applicable requirements of the American Society of Mechanical Engineers Code and to customer procurement documents. Section 4.4 of the Quality Assurance Manual provided measures for the approval and control of suppliers and described the process that Mitsubishi used to conduct surveys or audits, as required. Additionally, Section 4.4 provided guidance for the preparation of purchase specifications and subcontract specifications, including the imposition of regulatory requirements for the American Society of Mechanical Engineers Code, Section III products.

The team reviewed Procedure BUH94-06, "Vendor Evaluation Procedure," which provided guidance on the evaluation of the quality control capability of suppliers by performing surveys, audits and performance evaluations of the supplier quality assurance program. Procedure BUH94-06 provided a detailed description of the entire process to be followed by auditors before, during and after a survey/audit was performed.

No issues were identified.

~~(2)~~2) Supplier Audit and Surveillance Reports

Form

The team reviewed a sample of external audits and surveys to verify Mitsubishi's approval process of Sumitomo Metal Industries, Limited, Steel Tube Works and Sumitomo Metal Industries, Limited, Pipe & Tube Company Wakayama Steel Works. The team noted that the audits and annual assessments reviewed were adequately documented and provided evidence of each company's compliance with quality assurance program requirements. The team also verified that audit checklists were prepared and completed for the audit and contained sufficient objective evidence to support the conclusions made by Mitsubishi.

During the review, the team learned that as a consequence of nonconformance report UHNR-SON-RSG-06N005 related to inadequate lot control during final mill annealing of the tubing, Mitsubishi issued a stop work order to Sumitomo. As part of their process Mitsubishi visited Sumitomo to find the root cause of the nonconformance. After a review of Sumitomo's corrective action, Mitsubishi was able to confirm the adequacy of the corrective actions and preventive actions. Mitsubishi released Stop Work Order UHH-G06A097 imposed on Sumitomo.

On May 8, 2007, Mitsubishi performed Special Audit UHQ-07N004, on Sumitomo, in order to confirm adequacy of activities based on Sumitomo Corrective Action Plan UHCP-07N004. During the audit Mitsubishi found two findings and made one recommendation. Both findings required corrective action from Sumitomo. The Mitsubishi audit indicated that Sumitomo was not able to perform adequate activities for manufacturing heat transfer tubing in accordance with Sumitomo's shop manual. The causes of the deficiencies identified during the audit were a result of Sumitomo's staff failing to follow the shop manual requirements. Because the two findings were related to the stop work order, Mitsubishi did not allow Sumitomo to start manufacturing activities until adequate implementation of corrective actions were confirmed by Mitsubishi. On June 21, 2007, Mitsubishi verified Sumitomo implementation of the corrective actions. During this visit at Sumitomo, Mitsubishi verified the operations involving straight tube fabrication prior to tube bending operations were performed in accordance with Sumitomo's shop manual. Mitsubishi found that the same type of corrective actions taken by Sumitomo for straight tube fabrication operations applied to tube bending operations. During the review of the implementation of the corrective actions Mitsubishi could not verify acceptability of Sumitomo tube fabrication operations for the tube bending process. Mitsubishi allowed Sumitomo to restart operation only for the straight tube fabrication. On July 13, 2007, Mitsubishi subsequently confirmed the adequacy of Sumitomo corrective actions on tube bending processes. Mitsubishi verified that the bending operations followed the requirement of the Sumitomo' shop manual. On July 17, 2007, Mitsubishi lifted the restrictions imposed on Sumitomo and they were allowed to restart operations.

No issues were identified.

~~(3)~~3) Maintenance of the Approved Supplier List

The team reviewed Mitsubishi Quality Assurance Manual Section 4, "Procurement Control," which defined the controls for the maintenance, distribution, and update of Qualified Vendor List UES-20100006. According to Section 4, the Nuclear Plant Quality Assurance Section had the responsibility for preparing, approving, and distributing the qualified vendor list and any subsequent revisions. In addition, a review by the quality assurance engineer was required prior to final document approval. Mitsubishi was informed of changes to their supplier's quality assurance manuals through procurement requirements imposed on the suppliers on their certificate of qualification as an approved vendor. If the vendor did not maintain their quality assurance program, they were removed from the qualified vendor list. Prior to issuing a Quality Assurance Manual revision, approved vendors were required to send a copy to Mitsubishi for review and approval, after which Mitsubishi updated the qualified vendor list with the latest revision number and date.

No issues were identified.

5.3 Quality Assurance Conclusion

The team concluded that the quality assurance program requirements for quality activities to support the replacement steam generator project were consistent with the

requirements of 10 CFR Part 50, Appendix B. The team also concluded that SCE's and Mitsubishi's quality assurance program requirements were appropriately translated into implementing procedures to support the replacement steam generator project.

6.0 Implementation of Steam Generator Industry Information (Charter Item 6) (Mitsubishi Charter Item 3)

a. Inspection Scope

The team reviewed procurement documentation, Mitsubishi design documentation, and the 10 CFR 50.59 review package to assess SCE's and Mitsubishi's consideration and implementation (as appropriate) of operating experience as part of the steam generator replacement project, and in the steam generator tube inspections conducted during the current outages for SONGS Units 2 and 3. The team interviewed various personnel with respect to operating experience considerations relating to major design changes incorporated into the replacement steam generators. The team reviewed operating experience in NRC generic communications and worldwide plant operating experience that might potentially be relevant to conditions observed at SONGS.

b. Observations and Findings

No findings were identified.

The original steam generators installed throughout the domestic fleet of pressurized water reactors, including SONGS, experienced widespread corrosion of the tubes and tube support plates, stress corrosion cracking of the tubes, and wear at tube supports. These problems led to the replacement of nearly all of the original steam generators, in most cases well before the end of their design lifetime. For SONGS, the design of the replacement steam generators included a number of design changes to correct life limiting problems with the original steam generators, based in part on consideration of SONGS-specific and industry-wide operating experience. This included use of more corrosion resistant materials for the tubing and tube support plates to mitigate corrosion and stress corrosion cracking issues experienced in the past. The licensee's bid specification required that the stay cylinder feature of the original steam generators be eliminated to maximize the number of tubes that could be installed in the replacement steam generators and to mitigate past problems with tube wear at tube supports caused by relatively cool water and high flow velocities in the central part of the tube bundle. Mitsubishi employed a broached trefoil tube support plates instead of the egg crate supports in the original design. In addition to providing for better control of tube to support plate gaps and easier assembly, the broached tube support plates were intended to address past problems with the egg crate supports by providing less line of contact and faster flow between the tubes and support plates, reducing the potential for deposit buildup and corrosion. Mitsubishi selected a u-bend configuration for the upper part of the tube bundle instead of the square bend design of the original steam generators based on its experience that u-bends were easier to fabricate and support and were easier to inspect.

The team's review of Mitsubishi design documentation for the anti-vibration bars indicates that Mitsubishi considered wear in the u-bend region as the most important

issue affecting the anti-vibration bar design. Mitsubishi reviewed operating experience regarding wear in the u-bend region of replacement steam generators and trended the experience data as a function of steam generator manufacturer, tube packing arrangements (tube pitch, square versus triangular arrays), and steam generator size. The SONGS steam generators are relatively large, and Mitsubishi acknowledged that this and the tight tube packing geometry could affect wear experience. Mitsubishi stated that the SONGS replacement steam generator were designed to minimize these concerns by providing more support points with shorter spans in the u-bend region along with effective zero gaps between the tubes and anti-vibration bars during steam generator operation. Mitsubishi manufacturing was designed on achieving very small uniform gaps between the tubes and anti-vibration bars during assembly.

Engineering Change Package NECP 800071703 for the replacement steam generators evaluated industry operating experience as it related to the manufacture and operation of the replacement steam generators. Several of these experiences related to fabrication issues, lack of weld quality, material defects, loose parts, lack of cleanliness, and failure to fully expand tubes in the tubesheet. The licensee found most of these issues to be applicable to the replacement steam generators at SONGS, but that these kinds of issues would be adequately addressed by the supplier's (typically Mitsubishi) augmented quality assurance procedures and continuous quality oversight by the licensee. The licensee also cited augmented receipt inspections, in-process verifications, foreign material exclusion and control, and cleanliness inspections on the part of the supplier or the licensee, as applicable, as addressing these issues.

The licensee addressed industry operating experiences relating to stress corrosion cracking of steam generator tubing by noting that the Alloy 690 thermally treated tubing in the replacement steam generators were expected to be substantially more resistant to stress corrosion cracking than the tubing alloys used in earlier model steam generators. The licensee also addressed experience at another unit which experienced tie rod and consequential tube bow as a result of differential thermal expansion between the tubes and shroud and unexpected interference between some tube support plates. The stay rod (equivalent to tie rods at other unit) and shroud material for the replacement steam generators have been selected to have similar coefficients of thermal expansion which would preclude a similar problem.

Steam Generator Degradation Assessment 51-9176667-001 (prepared by AREVA) supporting steam generator inspections during the current outages for Units 2 and 3 evaluated industry operating experience relating to steam generator in-service inspections. This included operating experience reports, including NRC Information Notice 2010-05, "Management Of Steam Generator Loose Parts And Automated Eddy Current Data Analysis," relating to eddy current test probe issues and data analysis errors. In response to these issues, SCE personnel stated that specific training was given to the data analysts at SONGS on the lessons learned from these experiences and where applicable, appropriate data was included in the SONGS site specific performance demonstration. The licensee also described additional measures that would be taken at SONGS to address these issues. The review also addressed operating experience reports dealing with unexpected tube support indications or lack thereof. In response, SCE stated that indicated anti-vibration bar locations by eddy current will be compared to the anti-vibration bar locations specified in the Mitsubishi

design drawings.

Steam Generator Degradation Assessment 51-9176667-001 also addressed numerous operating experience reports involving loose parts and foreign objects in steam generators, including several instances involving resultant damage to steam generator tubing. These reports included NRC Information Notices 2004-10, "Loose Parts in Steam Generators," 2004-16, "Tube Leakage Due to a Fabrication Flaw in a Replacement Steam Generator," and 2004-17, "Loose Part Detection and Computerized Eddy Current Analysis in Steam Generators." Some of these reports dealt with eddy current probes, or pieces of probes, which were left behind as loose parts on the primary side. Most of the operating experience reports related to lose parts and foreign objects on the steam generator secondary side. In response, SCE approach for addressing this issue was through procedure changes and secondary side visual inspections which included the open tube lane, the entire peripheral annulus, and appropriate visual examination followup on eddy current indications of possible loose parts. The inspection with the exception of the loose parts component was performed, as scheduled, during the current refueling outage for SONGS Unit 2. The inspection for loose parts will be performed at the first scheduled inspection during the next refueling outage. The team noted that possible loose parts indications were not found during the 100 percent eddy current test inspection of the Unit 3 steam generators during the current outage. The team also noted that secondary side visual inspections were performed in the upper bundle area of the Unit 3 steam generators to evaluate the tube-to-retainer bar intersections and in a limited area above the 7th tube support plate.

The NRC staff issued many generic communications relating to steam generator tube integrity issues since the 1980s. The team reviewed these documents and determined that many of these related to the potential for stress corrosion cracking of the tubes which the staff found was not expected to be a concern for the thermally treated Alloy 690 material in the SONGS replacement steam generators by virtue of its greatly enhanced resistance to stress corrosion cracking. Most of the others related to problems encountered with eddy current flaw detection and sizing, the occurrence and detection of loose parts/foreign objects, and monitoring of primary to secondary leakage. The team's review indicated that lessons learned from these NRC generic communication documents had generally been incorporated into industry guideline documents relating to steam generator inspections, monitoring of primary-to-secondary leakage, and other guidelines documents prepared by the Electrical Power Research Institute. This information was incorporated into the licensee's inspection and leakage monitoring guidelines.

The team reviewed NRC generic communications not falling into one of the above categories for potential relevance to SONGS Unit 2 and 3. One of these was NRC Information Notice 2004-16 concerning an operational leakage event at another plant due to damage caused by a packing screw during transport to the steam generator manufacturer. The licensee stated in its steam generator change package that this incident was precluded for SCE by prohibiting the use of screws and nails as fasteners for tubing shipping crates. The licensee also addressed NRC Information Notice 2007 37, "Buildup of Deposits in Steam Generator," concerning fatigue of a low row u-bend at a foreign unit as a result of deposit build up and lack of support for the low row u-bend. Engineering Change Package NECP 800071703 specified that this type of

incident was precluded in the replacement steam generators by virtue of anti-vibration bar supports extending to the low row u-bends. Steam Generator Degradation Assessment 51-9176667-001 documented that this type of problem reflected an advanced stage of deposit accumulation that was not anticipated for the foreseeable future in the SONGS replacement steam generators.

~~c. Conclusions~~

~~The team's review indicated that lessons learned from these NRC generic communication documents had generally been incorporated into industry guideline documents relating to steam generator inspections, monitoring of primary-to-secondary leakage, and other guidelines documents prepared by the Electrical Power Research Institute. This information was incorporated into SCE's design specifications, inspection and, leakage monitoring guidelines.~~

7.0 Packing, Shipping, Handling, and Receipt Inspection (Charter Item 7)

a. Inspection Scope

The team interviewed licensee personnel involved with the packing, shipping, handling, and receipt inspection of the replacement steam generators. In addition, the team reviewed SCE receipt acceptance criteria to assess if critical attributes were appropriately specified and if the licensee had the ability to assess acceptability of meeting those acceptance criteria. The team reviewed evaluations associated with supplier deviation reports, nuclear notifications and changes to handling specifications. With respect to replacement steam generators the team focused on differences in SONGS shipping, handling, and receipt acceptance between the Unit 2 and 3 steam generators from the manufacturing site in Japan to final installation on site.

b. Observations and Findings

No findings were identified.

The team identified three unresolved items for which additional information is required to determine if performance deficiencies exist or if the issues constitute violations of NRC requirements.

(1) Introduction: The team identified an unresolved item associated with Unit 3 steam generators not shipped in accordance with specification SO23-617-01, "Design and Fabrication of Replacement Steam Generators for ~~Unit 2 and Unit 3," Revision 4,~~Units 2 and 3" (title does not match Documents Reviewed section – please check other titles for your sections) and requirements for handling, storage, and shipping. Specifically, ANSI N45.2-1977, "Quality Assurance Program Requirements for Nuclear Facilities," required a special protective environment for handling, storage, and shipping of the replacement steam generators. However, because of schedule changes, the Unit 3 protective environment which included maintaining a nitrogen pressure and a monitoring plan was altered significantly.

Description: The team evaluated specifications associated with the shipping and handling of the Unit 2 and 3 replacement steam generators. Based on the information evaluated by the team, the steam generators procurement and shipping specifications required monitoring and maintenance of nitrogen atmosphere inside the replacement steam generators during shipment. Supplier Deviation Request SDR 10041870-09091 dated December 1, 2009, documents a request "not to control the positive pressure, the dew point of nitrogen, and the oxygen content on the primary and secondary side of the Unit 3 replacement steam generators to accelerate delivery schedule."

Specification SO23-617-01, "Design and Fabrication of Replacement Steam Generators for Units 2 and 3," Revision 4, Section 3.16.3, specifies the supplier shall be responsible for monitoring and maintaining nitrogen atmosphere inside the steam generators during their shipping from Mitsubishi to the California port discharge point. The team noted that Unit 3 steam generators did not require, monitoring or control of dew point, oxygen concentration, inside nitrogen pressure. The team could not identify if this was properly evaluated (Reference Section 5 of shipping and handling procedure SO23-617-1-M1350).

Additional review and follow up will be required to review the evaluations and corrective actions associated with the maintaining the Unit 3 replacement steam generators protective environment during shipping and then determine whether this issue represents a performance deficiency or constitutes a violation of NRC requirements. This issue is identified as URI 05000362/2012007-05, "Shipping Requirements not in Accordance to Industry Standards."

(2) Introduction: The team identified an unresolved item associated with the shipping and handling specifications requiring methods of tube bundle support. The team could not determine if this requirement to provide a tube bundle support method was adequately evaluated by SCE.

Description: Based on the information gathered by the team on shipping and handling specifications associated with the Unit 2 and 3 replacement steam generators, the team could not determine that Mitsubishi or SCE adequately considered the potential impact of not providing methods of tube bundle supports as required in ~~Specification~~ SO23-617-01, "Design and Fabrication of Replacement Steam Generators for Units 2 and 3." In response to the team questions regarding tube bundle support methods, the team was provided with results from Procedure L5-04GA069, "Sagging Measurement Procedure," Revision 7. However the team noted the procedure is considered a non-quality affecting procedure and used for reference only.

Additional review and follow up will be required to review the evaluations associated with the requirements to provide tube bundle support during shipping for the Unit 2 and 3 steam generators and then determine whether this issue represents a performance deficiency or constitutes a violation of NRC requirements. This issue is identified as URI 05000362/2012007-06, "Shipping Requirements not in Accordance to Design and Fabrication Specifications."

(3) Introduction: The team identified an unresolved item associated with evaluation of excessive shipping induced forces of Unit 3 replacement steam generator 3E-088.

Description: The team reviewed the SG shipping accelerometer data reports for both Unit 2 and Unit 3. In addition, the team also reviewed shipping and handling records and identified the following:

- Different transoceanic shipping companies and ships were used (U2: Happy Ranger, U3: Enchanter)
- During the discharge from the ship Unit 3 replacement steam generator 3E0-88 (3B) recorded simultaneous signals on the three attached accelerometers
- Unit 3 steam generator 3E0-88 was the only steam generator to record simultaneous signals on the three attached accelerometers
- Unit 3 steam generators received significantly more accelerometers hits compared to Unit 2

Unit 3 replacement steam generator 3E0-88 accelerometers indicated up to a 1.23 g spike with a simultaneous recording on all three of the attached accelerometers. Mitsubishi provided an evaluation of the forces which showed loads were within allowable stress limits but exceeded stress for an operating basis earthquake. The team was not able to determine if this was properly considered.

Additional review by the NRC is required to fully assess if the shipping forces contributed to the tube-to-tube wear in Unit 3 and then determine whether this issue represents a performance deficiency or constitutes a violation of NRC requirements. This issue is identified as URI 05000362/2012007-07, "Unit 3 Steam Generator ~~3E0-88~~ 3E-088 Stresses Related to Handling."

~~c. Conclusions~~

~~The team identified three unresolved items related to the shipment of Unit 3 steam generators; however, the team did not identify any connection between these shipping changes and the unexpected tube-to-tube wear.~~

~~The unresolved items are :~~

- ~~Shipping Requirements not in accordance with Industry Standards~~
- ~~Shipping Requirements not in accordance with Design and Fabrication Specifications~~
- ~~Unit 3 Steam Generator 3E0-88 Stresses Related to handling~~

## 8.0 Thermal-hydraulic and Flow Induced Vibration Modeling (Charter Item 8)

a. Inspection Scope

The team conducted and overall review of Mitsubishi thermal-hydraulic design documents and drawings used in the manufacture of the Units 2 and 3 steam generators. The team developed an independent ATHOS model to run simulations for various operating conditions to assess thermal-hydraulic phenomena in the steam generators and assess differences in key parameters based on changing operating conditions. The objective of the modeling was to understand the interactions of the key parameters to compare ATHOS modeling results to the degradation trends found during the eddy current inspections.

~~The team reviewed portions of the vibration modeling. Two~~The team was not able to perform any independent tube vibration analysis because the NRC does not have the associated vibration software programs. However, since two key outputs of the thermal-hydraulic code are inputs to the vibration model, the ATHOS model results for fluid velocity and void fraction were used to predict increases or decreases in vibration forces and amplitude.

b. Observations and Findings

No findings were identified.

The team identified one unresolved item for which additional information is required to determine if a performance deficiency exists or if the issue constitutes a violation of NRC requirements.

(1) Introduction: The team identified an unresolved item associated with the adequacy of Mitsubishi's FIT-III thermal-hydraulic code. The FIT-III code predicted non-conservative low velocity and low void fraction results which were used as inputs to the vibration code FIVATS. These non-conservative thermal-hydraulic results lead Mitsubishi to conclude that margins to instability were significantly larger than they actually were.

Description: Replacement steam generators were designed and manufactured in accordance with SONGS Design Specification SO23-617-~~1and~~1, "Conformed Specification for Design and Fabrication of Replacement Steam Generators for Unit 2 and Unit 3," Revision 4 and ASME Section III, "Rules for Construction of Nuclear Facility Components". The replacement steam generators had enhanced materials and maintenance.

The tube bundle, comprised of 9727 u-tubes, is supported by a set of seven tube support plates which are maintained and spaced by a network of tie-rods. The ends of the u-tubes were welded onto the tube sheet lower face cladding and were full depth expanded in the tube sheet holes. The u-bends are supported by a set of 6 anti-vibration bars, having a maximum of 12 contact points, in the center of the bundle. For shorter tubes near the periphery, a fewer number of anti-vibration bars are present.

One of the major enhancements of the replacement steam generators was the use of Alloy-690 tubing versus Alloy-600 for corrosion resistance. Alloy-690 has lower heat conductivity so, to achieve ~~the~~ same power, the heat transfer surface area must be increased by at least 10 percent. This required more tubes to be used in the replacement steam generators. The increased number of tubes resulted in a more tightly compacted tube bundle and elimination of the stay cylinder. The increase in the number of tubes could lead to increases in primary reactor coolant flow through the steam generators. Orifices were ~~machined as part of~~installed in the steam generator inlet nozzles to ensure maximum allowed primary system flowrates were not exceeded.

The tube layout indexing or incrementation used in these generators was smaller than other replacement steam generator designs. The tighter indexing results in smaller pitch/diameter ratio in critical regions of the tube bundle u-bends. In addition, it was noted that the anti-vibration bar support structure is not connected to the wrapper for lateral or vertical support; instead the anti-vibration bar system structure is only supported vertically by resting on the tubes.

Other operational and physical comparisons of the replacement steam generators and original steam generators were reviewed by the team and no significant differences were noted.

Additional review by the NRC is required to fully assess the adequacy of Mitsubishi's FIT-III thermal-hydraulic code and then determine whether this issue represents a performance deficiency or constitutes a violation of NRC requirements. This issue is identified as URI 05000362/2012007-08, "Non-Conservative Thermal-Hydraulic Model Results."

~~(2)~~8.1 Thermal ~~Hydraulic and Vibration~~hydraulic Assessments

The replacement steam generators thermal hydraulic operation and responses were based on the steam generator design geometric characteristics and operating parameters of the reactor coolant flow and temperature and the secondary feedwater flow and temperature. Calculations were performed for 0 to 100 percent power, beginning-of-life and end-of-life conditions considering limiting tube plugging and fouling. The important actual operating parameters selected for use in the model were saturation pressure, circulation ratio, steam flowrate, tube and shell side pressure drops, water and steam inventories, and global heat transfer coefficient.

Mitsubishi used the SSPC (Steady State Performance Calculation) code to compute these operational parameters, as described in Mitsubishi Document L5-04GA510, "Thermal and Hydraulic Parametric Calculations," Revision 5. The FIT-III code was used to determine thermal-hydraulic fluid flow conditions, with the results described in Mitsubishi Document L5-04GA521, "3D Thermal and Hydraulic Analysis," Revision 3. The FIVATS code was used to compute tube stability ratios that are used to predict tube vibration, with results described in Mitsubishi Document L5-04GA504 "Evaluation of Tube Vibration," Revision 3. In addition, the ABAQUS code was used compute stress and natural vibration frequency, and a code called IVHET was used for tube wear analysis. The key design code for tube

bundle design and vibration analysis is thermal-hydraulic code FIT-III since it computes the two key parameters (fluid velocity and density[1]) that are the primary contributors to the onset of fluid-elastic instability, which indicates the potential for excessive tube vibration.

The Mitsubishi acceptance criterion for vibration was to avoid fluid-elastic instability of tube spans by keeping the calculated stability ratios less than 1. Mitsubishi used the approach given in the ASME code Section III, Division 1, Appendix N-1330, "Flow-Induced Vibration of Tubes and Tube Banks," to calculate stability ratios and they also avoided natural frequencies of the tubes similar to the reactor coolant pump dynamic frequencies.

Design specific flow induced vibration analysis was performed for select U-bend tubes exposed to the greatest vibration risk, generally those with longest unsupported length under most limiting operating condition (lowest steam pressure, end of life design conditions). The phenomenon of fluid-elastic instability of tubes is characterized by cross-flow velocity (for out-of-plane mode) and normal velocity (for in-plane mode) where the local velocities exceed a critical velocity value (given via Conners' Equation[2]). The parameter of local velocity divided by critical velocity is referred to as stability ratio. The accuracy of calculating fluid-elastic instability is limited based on inputs that are best determined by design-specific mockup test data. Mitsubishi did not perform design-specific mockup tests, but used generally accepted test data, and other data based on Mitsubishi test rigs that were not specific to the SONGS replacement steam generator design.

If operating velocities reach this critical value, vibration amplitudes can increase rapidly and fluid-elastic instability forces can lead to rapid pulsation and damaging of tubes. The U-bend region is most susceptible because (1) the local fluid has a higher void fraction, with high velocities; (2) the fluid flow is in a direction normal to the tube, and (3) the anti-vibration bars are limited in their dampening capability along the plane of the tubes. Traditional design of anti-vibration bar systems have not considered in-plane fluid forces since it was accepted that the rigidity and dampening strength of the tube in this direction was adequate to preclude it. This event at SONGS is the first US operating fleet experience of in-plane fluid-elastic instability, sufficient to cause tube-to-tube contact and wear in the U-bend region.

The team noted that Design Specification SO23-617-1, "Conformed Specification for Design and Fabrication of Replacement Steam Generators for Unit 2 and Unit 3," Revision 4, did not address specific criteria for stability ratio and does not mention fluid-elastic instability. The team did find that the Mitsubishi calculated design values for stability ratios did not exceed 0.5. It is important to note, that each steam generator manufacturer has different design values for maximum stability ratios; therefore there is no standard value. The smaller that the design stability ratio is (has to be less than 1), the more margin to fluid-elastic instability.

---

[1] Void fractions and density are inversely proportional.

[2] Fluidelastic Vibration of Heat Exchanger Tube Arrays, Journal of Mechanical design – Volume 100 – April 1978, H.J. Connors, JR.

Mitsubishi computed the flow-induced vibration status of the steam generators in Document L5-04GA504, "Evaluation of Tube Vibration," Revision 3. The critical flow velocity, Uc, was obtained using the Connors' Equation based on output fluid velocities and densities from their FIT-III thermal-hydraulic model. The critical flow velocity is then calculated based on damping ratio, tube mass, tube outside diameter, averaged local cross flow gap velocity, and fluid density per selected tube. The method is based on formulations given in the ASME code Section III, Division 1, Appendix N-1330, "Fluid Elastic Instability". The ratio of normal-to-tube cross flow gap velocity to this critical velocity defines the "stability ratio".

Steam generator vendors must develop specific methods based on the thermal-hydraulic code selected and experimental data used to determine coefficients in the Conners' Equation for their particular steam generator design. The experimental data used ~~in determining~~justify the ~~coefficients~~methods can be developed from in-house tests or taken from published industry data. Mitsubishi indicated that in their methodology two conservatisms were used in their bundle vibration analysis: (1) FIT-III gap velocities were averaged and multiplied by 1.5 and (2) one of 12 anti-vibration bars contacts were assumed to be inactive. The team noted that in Mitsubishi Document L5-04GA504, "Evaluation of Tube Vibration," Revision 3, the 1.5 multiplier was not an added conservatism but a requirement, needed to match test data results.

The team developed an independent model of the new steam generators using the ATHOS thermal hydraulic code[3]. The calculations were intended to assess operating cycle differences between Units 2 and 3 steam generators and review thermal hydraulic phenomena within the steam generators in order to investigate key parameters and causal factors for the excessive tube wear rates. The NRC ATHOS calculations determined that the differences in primary inlet temperature and steam flow between the units were negligible. NRC ATHOS results indicated high void fractions and high u-bend gap velocities existed in the bundle as compared to Mitsubishi FIT-III analyses used for design.

Mitsubishi provided a comparison of their ATHOS model to their FIT-III model results. The Mitsubishi ATHOS model fluid velocities were ~~approximately~~2.5 to 3 times higher than the FIT-III model velocities with the 1.5 multiplier applied. Other independent code calculations, including an analysis by Westinghouse using their in-house modified version of ATHOS and an analysis by AREVA using their French code CAFCA4 showed similar thermal-hydraulic results (up to 4 times higher velocities than FIT-III) as those computed in the Mitsubishi ATHOS results and the NRC independent ATHOS calculations. Based on these comparisons, it was concluded that the FIT-III code and model results used for design were non-conservative even with the multiplier applied.

---

[3] ~~ATHOS~~ATHOS3/SGAP Version ~~3.1: 0-S:~~ A Computer Program for Thermal-Hydraulic Analysis of ~~the Thermal-Hydraulics of a~~ Steam ~~Generator, 2008~~

~~[4] R. Voilette, M. J. Pettigrew, N. W. Mureithi, "Fluidelastic Instability of an Array of Tubes Preferentially Flexible in~~Generators, February 2005 **(need to verify this is the version that the ~~Flow Direction Subjected to Two Phase Cross Flow," Trans. ASME, Journal of Pressure Vessel Technology, 128, 148 (2006).~~NRC has a license for use. Did Carl re-run the ATHOS model using newest version and did it change our results?)**

Most of the experimental work in fluid-elastic instability has been carried out for two-phase flow, with an air-water medium. Accepted industry data, as presented by the Mitsubishi, shows that in staggered array bundles (triangular pitch, pitch/diameter =1.33), the onset of tube instability for modern steam generators, such as SONGS steam generators, can start at tube gap velocities above 6 meter/sec (pending effectiveness of the dampening structure)[4]. (please add reference for this statement). The NRC ATHOS model results indicated that there was a substantial localized region in the lower hot side of the u-bends where velocities exceeded 6 m/sec.

The NRC ATHOS calculations were compared to gap velocities computed both with the Mitsubishi ATHOS and the FIT-III models. Since tube R142C88 was the only one common for each of the analyses, it can be used as basis for comparison. The effective peak velocities were as follows:

- NRC ATHOS – 5.2 m/sec
- Mitsubishi ATHOS – 5.6 m/sec
- Mitsubishi FIT-III – 2.5 m/sec

Both the NRC and Mitsubishi ATHOS results were reasonably consistent and strongly suggested that high velocities coupled with high void fraction were primary causal factors in the tube fluid-elastic instability and the excessive wear patterns observed in the Unit 3 steam generators.

The team reviewed the verification and validation of both the Mitsubishi FIT-III thermal-hydraulic and FIVATS tube vibration models as stated in Specification SO23-617-1, Revision 4. The specification required Mitsubishi to design and build the steam generators in accordance with ASME NQA-1, "Quality Assurance Requirements for Nuclear Facility Applications," 1994, Subpart 2.7 "Computer Software" and Mitsubishi's quality assurance program.

The team reviewed Mitsubishi's verification and validation Report KAS-20050201, "FIT-III Code Validation Report," Revision 2. The report concluded the FIT-III code was valid for prediction of velocity and density behavior of two-phase flow under nominal conditions for the secondary side of PWR steam generators.

The team reviewed Mitsubishi's verification and validation Report KAS-20040253, "FIVATS Code Validation and Qualification Report," Revision 3. The FIVATS model was designed to calculate the stability ratios by using the flow velocity and density distributions from the FIT-III model. The FIVATS model primarily used the Conners' Equation, and validation was performed mainly by comparison to hand calculation; however, Mitsubishi used a mock-up test facility with a simple anti-vibration bar structure as part of their validation effort. The report concluded that adequate validation and qualification was performed to show compliance to software requirements and that the code could predict flow-induced vibration.

The team requested additional information as part of the verification and validation of the FIT-III thermal-hydraulic model. Mitsubishi provided several additional reports. One of the reports showed benchmarking comparisons to a French test facility

program called CLOTAIRE in 1986. Another report conducted in 2002, showed comparisons between FIT-III and ATHOS, and concluded that both codes had good correlation with the CLOTAIRE experimental data. Because of the limited information provided, the team could not determine the validity of the benchmarking of FIT-III.

Overall, the team determined that the validation and verification of the FIT-III code did not present overwhelming evidence that this code has been adequately benchmarked. The team did not find any problems with the validation of the FIVATS code.

### ~~(3)~~8.2 NRC ATHOS Results

Figures 1 through 4 (different view angles of same results) show results, with low $T_{hot}$ and low steam pressure and present a 3D isometric encapsulation of steam qualities (red scale) at and above 0.9 (i.e., void fraction > 0.99) and field velocities at and above 6.0 m/sec (white scale).

The ATHOS model results of high steam quality and steam velocity closely align with the area of concern (tube-to-tube wear) in the Unit 3 replacement steam generators. In Figure 5, the code predicted regions of high void fraction and high steam velocities (vertically located z-axis cut at about 20 inches above the 7$^{th}$ TSP) are superimposed with tube-to-tube wear indications from Unit 3 steam generator 3E0-88.

The tube-to-tube wear indications align with anti-vibration bar wear indication trends; however, the anti-vibration bar wear patterns appear to indicate a more square-like, essentially rectangular behavior that suggests that there may also be a mechanical, fabrication, assembly, and/or material contribution to the tube-to-tube wear degradation.

**Figure 1**

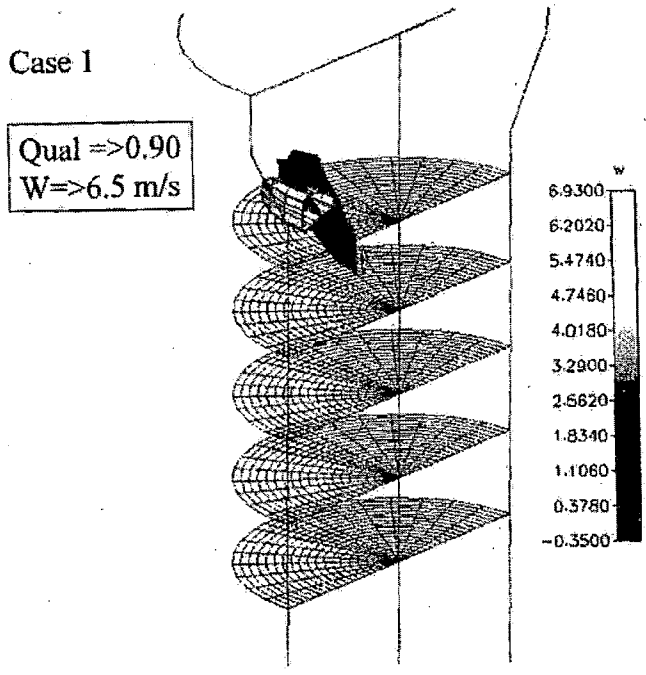
Case 1
Qual =>0.90
W=>6.5 m/s
W
6.9300
6.2020
5.4740
4.7460
4.0180
3.2900
2.5620
1.8340
1.1060
0.3780
-0.3500

**Figure 2**

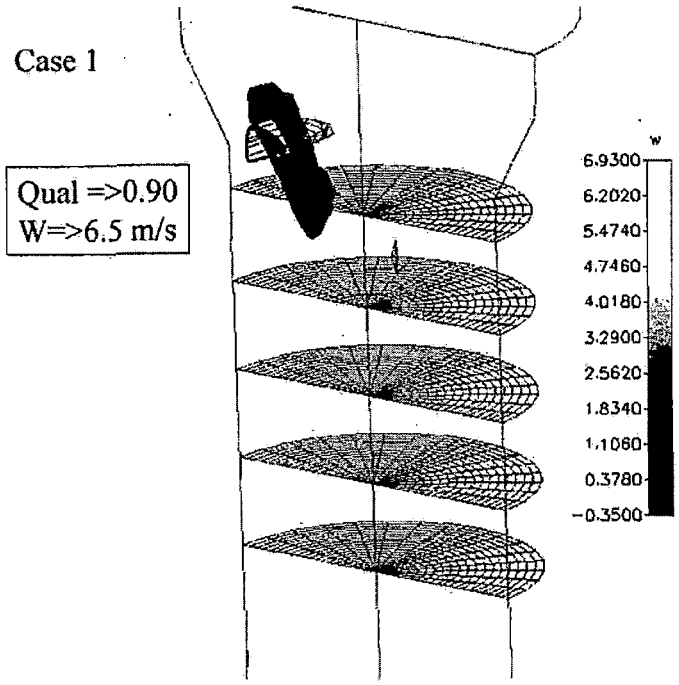


**Figure 3**

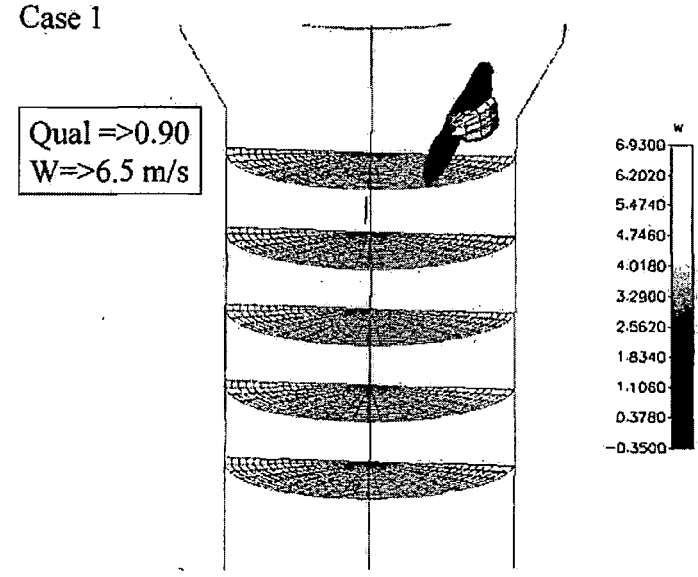

Case 1

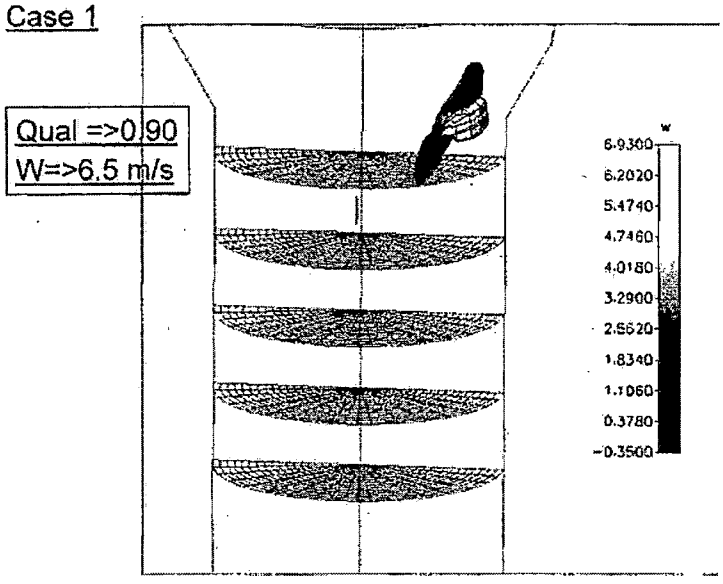


**Figure 4**

Case 1

Qual =>0.90
w=>6.0 m/s

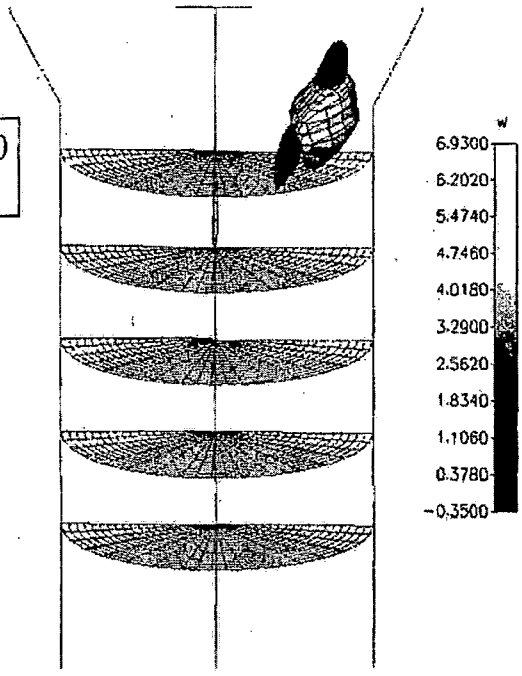

~~The ATHOS code predicted regions of high void fraction and high steam velocities are superimposed with tube-to-tube wear indications from Unit 3 steam generator 3E0 88~~

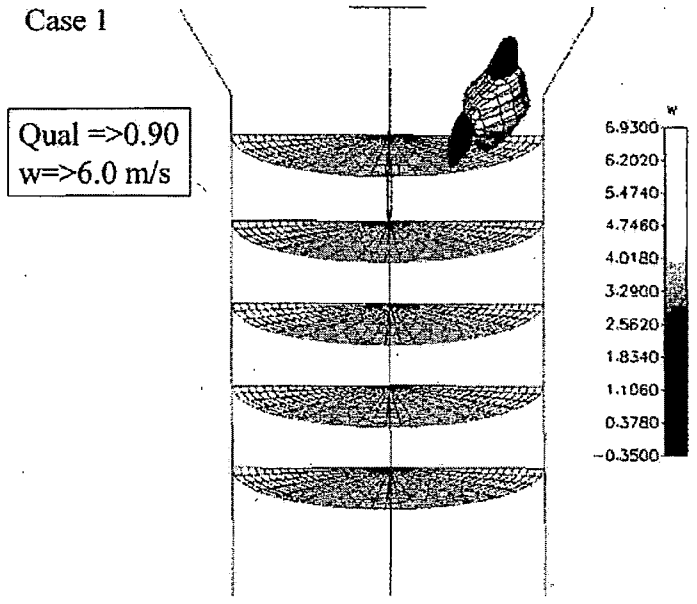


**Figure 5**

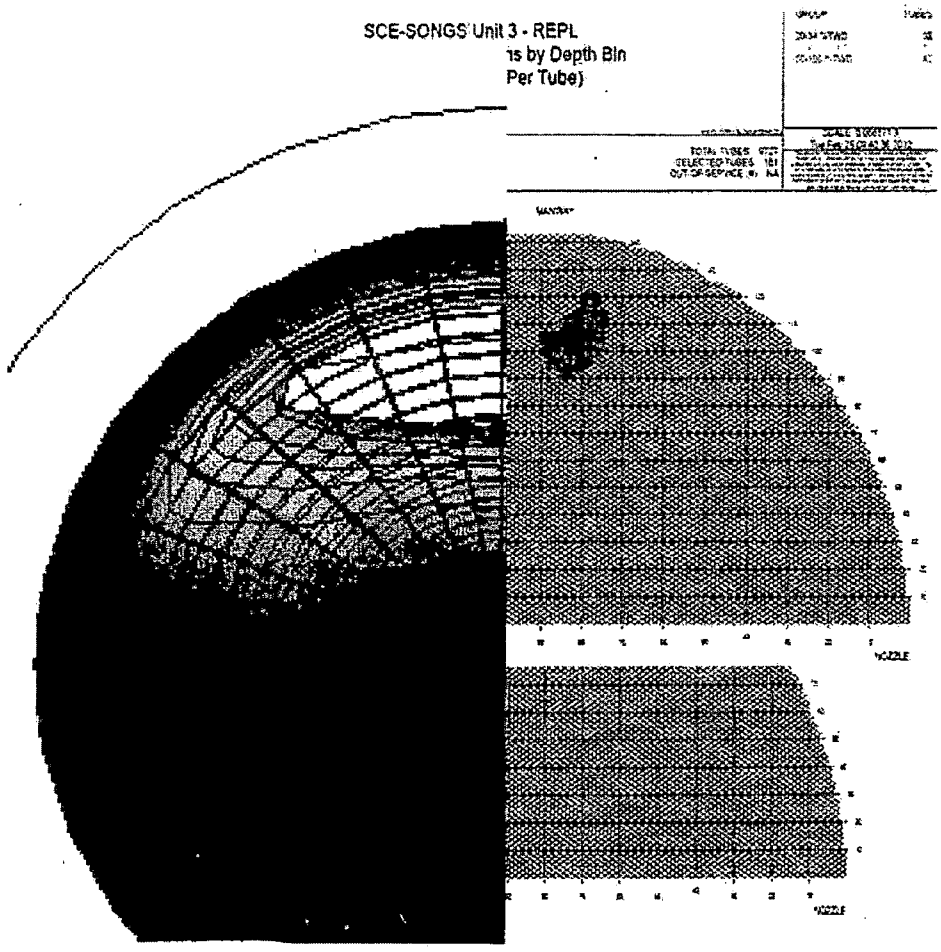


Enclosure

The NRC analysis indicated a correlation with the tube-to-tube wear based on a combination of high void fraction and high steam velocities. It should be noted that the traditional forcing function, fluid velocity squared times density, does not show good agreement with the tube-to-tube wear patterns. This indicated that the high quality steam fluid velocities and high void fraction may be sufficiently high to cause conditions in the generators conducive for onset of fluid-elastic instability.

The above analyses apply equally to Units 2 and 3, so it does not explain why the accelerated fluid-elastic instability wear damage was significantly greater in Unit 3 steam generators. The ATHOS thermal-hydraulic model predicts bulk fluid behavior based on first principals and empirical correlations and as a result it is not able to evaluate mechanical, fabrication, or structural material differences or other phenomena that may be unique to each steam generator. Therefore this analysis cannot account for these mechanical factors and differences which could very likely also be contributing to the tube degradation.

~~6.~~8.3 Conclusion

~~The team identified one unresolved item associated with the non-conservative F|T-III thermal-hydraulic model results.~~

Based on independent NRC thermal-hydraulic analysis, the team concluded that the SONGS replacement steam generators were not designed with adequate margin to

preclude the onset of fluid-elastic instability. Therefore unless changes are made to the operation or configuration of the steam generators, high fluid velocities and high void fractions in localized regions in the u-bend will continue to cause excessive tube wear and accelerated wear that could result in tube leakage and/or tube rupture. The deficiencies appear to be related to Mitsubishi's FIT-III thermal hydraulic code having predicted non-conservative low velocity results and low void fractions. These results ~~led~~lead Mitsubishi to conclude that margins to instability were significantly larger than they actually are. This assessment is based on eddy current data, NRC ATHOS analysis, Mitsubishi ATHOS analysis, and other thermal-hydraulic analyses completed by Westinghouse and AREVA that all identified significantly higher fluid velocities and void fractions than FIT-III.

Based on the cause evaluation and corrective action plan, SCE determined that the best solution to prevent tube-to-tube wear was to conservatively plug and stabilize the affected areas. By taking the impacted tubes out-of-service, SCE determined that this should reduce the potential for localized fluid velocities reaching critical velocity. In addition, in order to ensure sufficient margin to preclude the onset of fluid-elastic instability, SCE determined that reactor power would also have to be reduced. At this time SCE is still developing additional corrective actions to prevent tube-to-tube wear. The actions have not been finalized and no determination has been made concerning the appropriate power level. The NRC has not made any conclusions on the proposed corrective actions. Once the corrective actions have been finalized, they will be ~~inspected~~reviewed and evaluated as part of the Confirmatory Action Letter followup inspection.

9.0 Risk Assessment (Charter Item 9)

a. Inspection Scope

The team reviewed the steam generator tube leak and failures of multiple steam generator tubes during in-situ pressure testing to support an assessment of the risk of the degraded steam generator tubes during various accident conditions, including a main steam line break accident.

b. Observations and Findings

No findings were identified.

An NRC senior reactor analyst ~~performed a preliminary~~ is currently working with SCE risk assessment. ~~The risk is composed of two parts: (1) a non-consequential steam line break that induces a steam generator tube rupture, specifically involving the degraded tubes; and (2) an elevated risk of a tube rupture as an initiating event.~~

~~Assuming that a steam line break would cause the degraded steam generator tubes~~ personnel to ~~rupture during a "T/2" exposure period of 6 months yielded a change in the large early release frequency of 4E-6/yr. However, SCE informed the NRC that a calculation is under review that will likely indicate that the differential pressures generated by a steam line break would not be large enough to rupture the degraded tubes as long as operators successfully implemented their emergency procedures. If this is confirmed,~~determine the risk associated with ~~steam line breaks will be significantly reduced.~~

~~Although in this case the degraded condition of the tubes was manifested as a small primary to secondary leak, it is possible that a full-blown rupture could have been the first indication. The baseline core damage frequency of a steam generator tube rupture, according to the SONGS SPAR model, is 4.26E-7/yr. Because of an unmitigated bypass of containment, the large early release frequency is also 4.26E-7/yr. Assuming conservatively that the steam generator tube rupture frequency would at least double, the increase in large early release frequency attributable to the degraded tubes would be approximately 2.13E-7/yr (taking into account a 6-month exposure period).~~

~~It should be noted, this is a preliminary assessment of the risk requiring additional information and inspection to ascertain whether a performance deficiency exists. This does not include or preclude regulatory or enforcement action by the NRC~~the loss of tube integrity for multiple tubes.

10.0 Assess Quality Assurance, Radiological Controls, and Safety Culture Components (Charter Item 10)

a. Inspection Scope

The team reviewed the event, operator actions, management decisions, steam generator eddy current examinations, in-situ pressure testing, and tube plugging and

stabilization activities to determine whether issues related to quality assurance, radiological controls, or safety culture existed.

b. Observations and Findings

No findings were identified.

Region IV radiation protection inspectors reviewed the estimated offsite radiation exposure from the actual steam generator tube leak on Unit 3 steam generator 3E0-88 that occurred on January 31, 2012, including the potential dose consequence to site workers and members of the public. The licensee determined that the Unit 3 steam generator tube leak resulted in a release of gaseous effluents into the public domain, and the primary radionuclides released were argon-41, xenon-133, and xenon-135. The release resulted in an estimated 0.0000452 (4.52 E-5) mrem dose to the public. Inspectors also reviewed design drawings and radiation monitor data, performed plants tours, and confirmed the licensee's use of the offsite dose calculation methodology.

~~c. Conclusions~~

~~The Region IV radiation protection~~The inspectors concluded that the Unit 3 steam generator tube leak was detected by the condenser steam jet air ejector radiation monitor 3RT-7820 as per design. In addition, the radiation monitor 3RT-7820 alarmed and alerted SONGS operators of the steam generator tube leak as required. ~~The inspectors concluded that SCE appropriately accounted for the unplanned release associated with the Unit 3 steam generator tube leak.~~

Form

11.0 Operational impacts from Unit 3 to Unit 2 (Charter Item 11)

a. Inspection Scope

As follow-on of the previous sections, the team reviewed collections of the Mitsubishi documents and presentations, licensee documents and presentations, and NRC independent analysis and assessments to consider the operational impact on Unit 2 based on analysis and data, including eddy current results, regarding the as-found condition of Unit 3. The team compared key observations and overall differences in operational parameters that are common to both units that could affect and possibly limit Unit 2 operation. The team focused on differences in fabrication, manufacturing, operation, and eddy current data results between Units 2 and 3 steam generators.

b. Observations and Findings

No findings were identified.

Based on the review of current Cycle 16 operating data and independent NRC analysis it does not appear that there were any major difference in the thermal hydraulic phenomena at normal full power operation. Since generator physical dimensions and design are identical, the operational parameters are basically the same between the Unit 2 and 3 steam generators; therefore, the hydraulic forcing function that caused tube-to-tube wear and accelerated anti-vibration bar and tube support plate wear should also be same. The initial inspections of the Unit 2 steam generators did not indicate significant wear except at the retainer bars (different mechanism caused this wear). However, subsequent follow up inspections in Unit 2 with a more sensitive probe confirmed the existence of minor tube-to-tube wear in two neighboring tubes but in one of the steam generators. The tube-to-tube wear that was found in Unit 2 was in a similar location as that found in both of the Unit 3 steam generators.

The phenomenon of fluid-elastic instability is a function primarily of two criteria: the fluid velocity forces and the damping capability of the support structure (i.e., the tube support plates, the tubesheet, and the anti-vibration bars). Therefore, if it is determined that the thermal hydraulic forces in the bundle are the same, it can be concluded that the damping forces between the Unit 2 and Unit 3 replacement steam generators must be different. Mitsubishi performed several studies that indicated that gap contact forces in the anti-vibration bars were greater in Unit 2 than in Unit 3. However, with the exception of manufacturing data that shows slight differences, there is not currently a method available to measure the clearances between the anti-vibration bars and the tubes; however, SCE is currently working with AREVA to develop a method to take these measurements.

The tube damage found in Unit 3 is markedly more severe than Unit 2, especially considering that Unit 3 operated only about half the amount of time as Unit 2. This suggests that there is indeed a sizeable difference in the damping capability of the unit steam generators.

There are generally two options to arrest localized damaging thermal hydraulic phenomena in steam generators. The first and preferred option is to plug tubes in the

affected area. The collective plugging tends to relocate and reduce high fluid velocities and void fractions, and has on previous occasions in industry been successful. However, if plugging selected tubes does not provide significant margins adequate to arrest the damage mechanism, thermal hydraulic conditions can be reduced through a reduction in power. Reducing power has several beneficial effects including (1) tends to increase steam pressure, (2) reduces high steam fluid velocities and high void fraction in the bundle, and (3) improves damping. Currently, SCE is still reviewing and developing additional corrective actions to preclude fluid-elastic instability. The NRC has been observing some of the mockup testing being used to qualify additional repair activities.

~~c. Conclusions~~

~~Based on the review of actual operating data and independent thermal-hydraulic modeling analyses, the team determined that there were no major differences in the thermal-hydraulic phenomena at normal full power operation.~~

~~The NRC will review both physical and operational changes that SCE completes as part of the Confirmatory Action Letter inspections.~~

12.0 Mitsubishi Divider Plate Manufacturing and Weld Issues (Mitsubishi Charter Item 2)

a. Inspection Scope

On March 18, 2009, Mitsubishi identified cracking indications in the weld between the divider plate and the channel head of Unit 3 replacement steam generator 3E0-88 (see figure below), after completion of the ASME Section III hydrostatic test on the secondary side. The extent of condition investigation also identified similar cracking indications in Unit 3 replacement steam generator 3E0-89. As discussed in Section 4 of this report, the cause of the cracking was attributed to the air carbon-arc gouging process used to remove the clad weld from the channel head. The team reviewed information associated with the repair of the cracking indications to assess whether the repair activities resulted in relevant differences in design and fabrication that could be considered as contributing factors for the cause of the tube-to-tube wear issue in Unit 3.

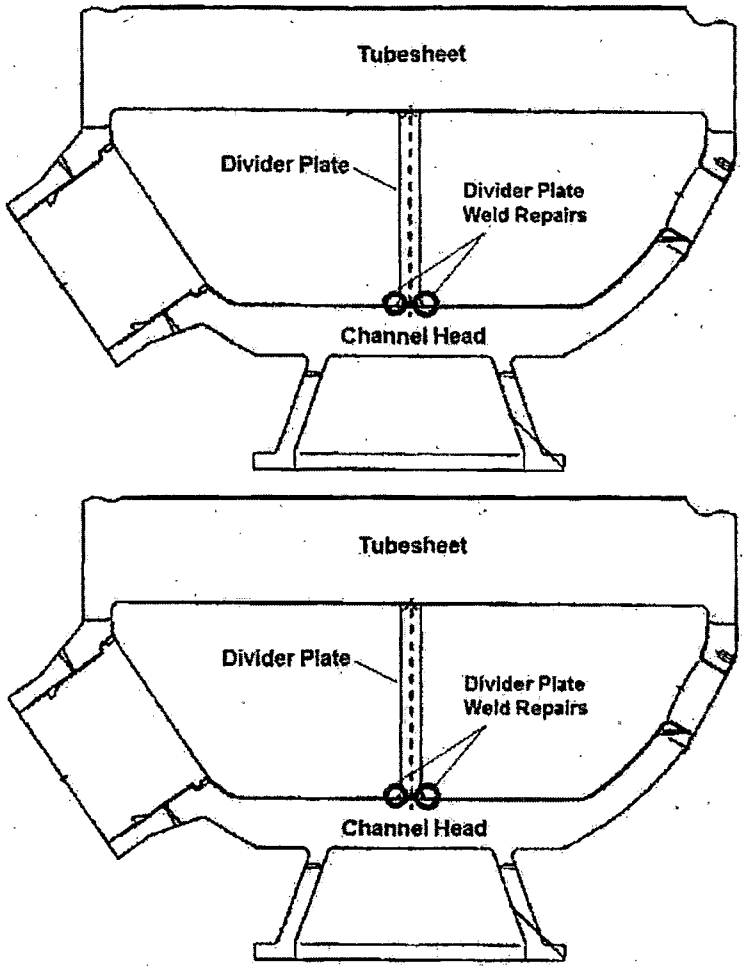


Location of Divider Plate Weld Repairs in Unit 3 Steam Generators (For Illustration Purposes Only)

Form
Form

b. Observations and Findings

No findings were identified.

The team identified an unresolved item for which additional information is required to determine if a performance deficiency exists or if the issue constitutes violation of NRC requirements. The team also identified several observations related to the divider plate weld repairs in Unit 3 replacement steam generators.

1) Introduction: The team identified an Unresolved Item associated with the adequacy of evaluation and controls for the divider plate weld repairs.

Description: The cracking of the divider plate weld in both Unit 3 replacement steam generators required extensive repairs affecting the channel head, divider plate, and tubesheet. Based on interviews with licensee personnel and the review of documentation for the repairs, the team determined that Mitsubishi did not perform a comprehensive evaluation to assess the impact of the divider plate repairs on the integrity of the tube bundle. The team determined that the areas listed below were not considered or evaluated in sufficient depth to identify the potential adverse effects of the planned weld repairs.

- Additional Rotations – The repair activities for the Unit 3 steam generators required additional rotations of the steam generator assembly while these were oriented in the horizontal position. The repairs resulted in approximately 300 additional rotations in each steam generator, which could have affected the configuration of the tube bundle in terms of anti-vibration bar gaps or distortion. The team identified that Mitsubishi did not fully evaluate the impact of additional rotations on the configuration of the steam generators since rotation was considered a normal evolution in the fabrication process.

- Heat Input – The repair process included extensive heat-adding activities such as grinding, flame cutting, and post-weld heat treatment. While these activities were performed in accordance with the construction code of record and an approved repair plan, they could have resulted in thermal expansion and unintended distortion of steam generator components. For example, the channel heads were removed using flame cutting and Mitsubishi's evaluation for the impact of this activity was limited to the base material area in the vicinity of the cut, i.e. the heat affected zone. Mitsubishi did not fully assess the impact this activity could have on the overall configuration of the steam generator in terms of thermal expansion of the tubesheet or distortion.

- Dimensional Checks after Repair – The team identified that Mitsubishi did not perform dimensional verifications (e.g. clearances) of the tube bundle or other secondary side dimensions after the repairs of the Unit 3 steam generators to confirm that critical dimensions were not affected by the repairs.

Additional review by the NRC is required following completion of the licensee's cause evaluation to fully assess how the repair activities affected the Unit 3 replacement steam generators and then determine whether this issue represents a performance

deficiency or constitutes a violation of NRC requirements. This issue is identified as URI 05000362/2012007-09, "Evaluation of the Effects of Divider Plate Weld Repairs in Unit 3 Replacement Steam Generators."

2) Repair Plan: The team noted that Mitsubishi developed a specific plan to conduct the repair of the divider plate weld in both Unit 3 replacement steam generators. The repair plan adequately described the major repair steps and the required implementing procedures. For some of the repair stages, the licensee developed new procedures to prescribe activities outside the normal fabrication sequence. The repair plan consisted of the following major steps:

   - Cutting off the divider plate from the tubesheet by grinding
   - Cutting off the channel head from the tubesheet by flame cutting
   - Cutting the divider plate from the channel head by grinding
   - Removal of the heat affected zone of the channel head bowl edge due to flame cutting
   - Application of weld buildup and post-weld heat treatment on the channel head bowl edge
   - Application of low alloy steel buildup and Alloy 690 butter on the bottom of the channel head for divider plate welding, including required post-weld heat treatment
   - Application of Alloy 690 buildup on the divider plate, including required post-weld heat treatment
   - Welding divider plate to channel head
   - Welding the divider plate to the tubesheet
   - Welding the channel head to the tubesheet
   - Primary side hydrostatic test

3) Differences between Replacement Steam Generators: The team identified the notable differences listed below between Unit 2 and Unit 3 replacement steam generators as a result of the divider plate weld repair activities.

   - Material Class for the Tubesheets – The tubesheet material for both Unit 3 replacement steam generators was reclassified to facilitate the additional post-weld heat treatment required for the repair of the divider plate welds. The tubesheet manufacturer originally certified that the tubesheet material met the requirements of ASME specification SA-508/Grade 3/Class 2, with a post-weld heat treatment time of approximately 15 hours. The repair activities in Unit 3 required additional post-weld heat treatment, which was expected to affect the properties of the tubesheet material to the extent that the mechanical properties would not meet the requirements for SA-508/Grade 3/Class 2 material. Mitsubishi performed mechanical testing on a specimen fabricated from the archive samples that was exposed to 30 hours of post-weld heat treatment and the tests showed that the tubesheet material's tensile strength did not meet the ASME specifications for SA-508/Grade 3/Class 2 material. Mitsubishi performed a reconciliation review to reclassify the material to SA-508/Grade 3/Class 1,

which has a lower tensile strength. The reconciliation included an evaluation of resulting stresses on the tubesheet under design, upset, emergency, faulted, and test conditions using the material properties for SA-508/Class 1 material. The evaluation resulted in acceptable stresses based on the stress limits imposed by the construction code of record. This issue was evaluated by Mitsubishi in the non-conformance report process and Supplier Deviation Request SDR-~~08610041870~~-086 10041870-09086 was submitted to the licensee for review and approval. The licensee approved the reclassification of the tubesheet material.

- Minimum Thickness of the Channel Head Base Metal – The channel heads of both Unit 3 steam generators were removed by flame cutting to facilitate the divider plate weld repairs. The removal and final welding of the channel head resulted in a reduction of the minimum wall thickness of the channel head base metal. The minimum base metal thickness was reduced by 1.18-inches. Mitsubishi evaluated this change in the "Design Report for the Channel Head Region." The reduction in minimum wall thickness was addressed through a reconciliation of stress ratios based on the stress limits imposed by the construction code of record. The analysis demonstrated the structural adequacy of the channel head, primary inlet nozzle, primary outlet nozzle, primary manway, support skirt, and the stud bolts of the primary manway.

- Number of Bolts in the Divider Plate Patch Plates – The original design of the replacement steam generators included a patch plate held in place at the upper corners of the divider plate by three bolts. As a result of the divider plate-to-tubesheet weld removal to support the repair activities, the Unit 3 divider plate patch plates were modified to be held by two bolts instead of the three bolts specified in the original design. Mitsubishi submitted this design change to the licensee for review and approval. Licensee personnel approved the design change as requested.

- Weld Buildup on Channel Head Surfaces – Since the repair of the divider plate welds in Unit 3 steam generators required cutting of the channel head, weld buildup had to be applied on the affected surfaces in order to restore the dimensions to design specifications. Mitsubishi submitted this design change to the licensee for review and approval. Licensee personnel approved the design change as requested.

- Post Weld Heat Treatment – The tubesheet-to-channel head weld area experienced a total of two post-weld heat treatments. Both Unit 3 replacement steam generators received an additional local post-weld heat treatment at approximately 1103° F for approximately 3.5 hrs. Mitsubishi submitted this fabrication process change to the licensee for review and approval. Licensee personnel approved the design change as requested.

- Total of Rotations during Fabrication – The total number of rotations on each steam generator varied as a result of the hydrostatic test results and the repairs on the divider plate welds.

| Steam Generator | Initial Rotations | Additional Rotations for Divider Plate Repairs | Total Rotations |
|---|---|---|---|
| Unit 2 E0-89 | 520 | 0 | 520 |
| Unit 2 E0-88 | 510 | 0 | 510 |
| Unit 3 E0-89 | 470 | 340 | 810 |
| Unit 3 E0-88 | 440 | 320 | 760 |

c. ~~Conclusions~~

~~The team identified one unresolved item associated with the repair work done on the Unit 3 divider plate. The team did not identify any connection between the repairs of the divider plate and the unexpected tube-to-tube wear.~~

13.0 Office of Nuclear Reactor Regulation (NRR) Review of SONGS 50.59 Evaluation

a. Inspection Scope

The NRR technical specialist reviewed all of the design changes associated with the replacement steam generators to determine whether the changes to the facility or procedures, as described in the updated final safety analysis report, had been reviewed and documented in accordance with 10 CFR 50.59 requirements. The technical specialist reviewed the various information used by SCE to review the changes being made to the replacement steam generators, including calculations, analyses, design change documentation, procedures, the updated final safety analysis report, the technical specifications, and plant drawings. The evaluation process used by the technical specialist included determining if the design changes to the replacement steam generators were a change to the facility or procedures as described in the updated final safety analysis report or a test or experiment not described in the updated final safety analysis report. The technical specialist also verified that safety issues related to the changes were resolved. The technical specialist compared the safety evaluations and supporting documents to the guidance and methods provided in NEI 96-07, "Guidelines for 10 CFR 50.59 Implementation," Revision 1, as endorsed by NRC Regulatory Guide 1.187, "Guidance for Implementation of 10 CFR 50.59, Changes, Tests, and Experiments," to determine the adequacy of the 10 CFR 50.59 evaluations.

b. Observations and Findings

No findings were identified

The NRR technical specialist identified one unresolved item for which additional information is required to determine if performance deficiencies exist or if the issues constitute violations of NRC requirements.

(1) Introduction: The NRR technical specialist reviewed SCE's 10 CFR 50.59 evaluation contained in Engineering Change Packages 800071702 and 800071703 for the Unit 2 and Unit 3 replacement steam generators, respectively, in which SCE determined that the impact of the replacement steam generators on the current licensing basis and any need for NRC approval as required by 10 CFR 50.59.

(2) Description: The NRR technical specialist reviewed the SCE's 10 CFR 50.59 evaluation against 10 CFR 50.59(c)(2)(viii) which requires that licensees obtain a license amendment pursuant to 10 CFR 50.90 prior to implementing a proposed change if the change would result in a departure from a method of evaluation described in the final safety analysis report (as updated) used in establishing the design bases or in the safety analyses. Industry guidance NEI 96-07, Revision 1, Section 3.10, "Methods of Evaluation," states, "Definition: Methods of evaluation means the calculational framework used for evaluating behavior or response of the facility or structures, systems, and components." Regulation 10 CFR 50.59 a(2), states, "*Departure from a method of evaluation described in the FSAR (as updated) used in establishing the design bases or in the safety analyses* means (i) changing any of the elements of the method described in the FSAR (as updated) unless the results of the analysis are conservative or essentially the same; or (ii) changing from a method described in the FSAR to another method unless that method has been approved by NRC for the intended application." Regulation 10 CFR 50.59(d)(1) requires that the licensee maintain records of changes in the facility that "includes a written evaluation which provides the bases for the determination that the change, test, or experiment does not require a license amendment...." The technical specialist evaluated SCE's bases for determining that the changes would not result in the departure from the method of evaluation used in establishing the design bases or in the safety analyses. Specifically, the technical specialist evaluated whether the changes involved:

(a) changing of any of the elements of the method described in the updated final safety analysis report, which consistent with 10 CFR 50.59 a(2)(i) would be justified by demonstrating that the results of the analysis are conservative or essentially the same; or

(b) changing from a method described in the updated final safety analysis report to another method, which consistent with 10 CFR 50.59 a(2)(ii) would be justified by demonstrating that method has been approved by NRC for the intended application.

The NRR technical specialist reviewed SCE's 10 CFR 50.59 evaluation and found two instances that failed to adequately address whether the change involved a departure of the method of evaluation described in the updated final safety analysis report.

(a) Use of ABAQUS instead of ANSYS: Updated Final Safety Analysis Report Sections 3.9.1.2.2.1.11 and 3.9.1.2.2.2.3 were revised to reflect that the SONGS Unit 2 and 3 original steam generators stress analyses for reactor coolant system structural integrity utilized the ANSYS computer program, whereas the replacement steam generators analyses utilized the ABAQUS computer program. The SCE's 50.59 evaluation incorrectly determined that using the ABAQUS instead of ANSYS was a change to an element of the method described in the updated final safety analysis report did not constitute changing from a method described in the updated final safety analysis report to another method, and as such, did not mention whether ABAQUS has been approved by the NRC for this application.

(b) Use of ANSYS instead of STRUDL and ANSYS: Updated Final Safety Analysis Report Section 5.4.2.3.1.3 was revised to reflect that the SONGS Unit 2 and 3 evaluation of tube stress under loss of coolant accident conditions for the original steam generators consisted of a two-step process utilizing the STRUDL and ANSYS computer programs to calculate displacement histories and tube stresses, respectively, while the corresponding replacement steam generators analysis determined tube stresses from blowdown forces using only the ANSYS computer program. While SCE's 50.59 evaluation correctly considered this a change from a method described in the FSAR to another method, the 50.59 evaluation did not mention whether the method has been approved by NRC for this application.

~~This issue is identified as URI 05000362/2012007-10, "Evaluation of Departure of Method of Evaluation for 10 CFR 50.59 Processes."~~

~~c. Conclusions~~

~~The NRR technical specialist identified one unresolved item associated with a change in the method of evaluation as described in the updated final safety analysis report.~~ Additional review and followup will be required to review the departure of the method of evaluation used during the stress analysis calculations associated with the replacement steam generators and then determine whether this issue represents a performance deficiency or constitutes a violation of NRC requirements. This issue is identified as URI 05000362/2012007-10, "Evaluation of Departure of Method of Evaluation for 10 CFR 50.59 Processes."

14.0 Exit Meeting Summary

On June 18, 2012, the NRC held a public meeting and presented the inspection results to Mr. P. Dietrich, Senior Vice President and Chief Nuclear Officer, and other members of the staff, who acknowledged the findings. Proprietary information was provided to the team and all proprietary information was returned to SCE.

**SUPPLEMENTAL INFORMATION**
**KEY POINTS OF CONTACT**

Licensee Personnel

P. Dietrich, Senior Vice President and Chief Nuclear Officer
R. Litzinger, President, SCE
D. Bauder, Vice President and Station Manager
T. Palmisano, Vice President of Engineering, Projects and Site Support
T. McCool, Plant Manager
T. Yackle, Assistant Plant Manager
D. Yarbrough, Director, of Operations
R. Corbett, Director, of Performance Improvement
O. Flores, Director, of Nuclear Oversight
R. St. Onge, Director, of Nuclear Regulatory Affairs
B. Winn, Director, of Nuclear Financial Management
E. Avella, Director, of Project Management
M. Coveney, Director, of Nuclear Leadership
M. Stevens, ~~Technical Specialist~~Title needed, Nuclear Regulatory Affairs
C. Cates, ~~Manager,~~ Nuclear Safety Culture and Site Recovery Manager
M. Malzahn, ~~Engineer,~~ Project Management Engineer
C. Harberts, ~~Manager,~~ Steam Generator Replacement Project Manager
M. Mihalik, Senior Engineer, Project Management Organization
R. McWey, ~~Manager,~~ Nuclear Oversight Manager
M. Pawlaczyk, ~~Technical Specialist,~~ Nuclear Regulatory Affairs Technical Specialist
J. Peattie, ~~Manager,~~ Maintenance Manager
R. Treadway, ~~Manager,~~ Nuclear Regulatory Affairs Manager
B. Olech, Consulting Engineer, Edison
~~JD.~~ Brabec, Project Manager, Steam Generator Recovery Program
D. Calhoun, Senior Engineer, Design Engineering Organization, Edison

Mitsubishi Personnel

H. Kaguchi, Mitsubishi Heavy Industries, Director, Component Designing Department
I. Otake, Mitsubishi Heavy Industries, Deputy Chief Engineer, Quality Assurance Department
T. Tsuruta, Mitsubishi Heavy Industries, Engineer, Quality Assurance Department
T. Inoue, Mitsubishi Heavy Industries, Deputy Director, Plant Designing Department
H. Hirano, Mitsubishi Heavy Industries, Project Manager, Overseas Project, Component Designing Department
R. Bywater, Mitsubishi Nuclear Energy Systems, COLA ~~Project~~Licensing Manager
F. Gillespie, ~~Mitsubishi Nuclear Energy Systems, Senior Vice President~~
~~R. Godley, Mitsubishi Nuclear Energy Systems, Deputy General Manager, Licensing Support~~
R. Godley,

Other Contractor Personnel

R. Walker, MPR Consultant

M. Short, Consultant
~~B. Marlow, AREVA, Vice President, Key Accounts~~
~~M. Street, AREVA, Manager, Primary Component Projects and Warranty Support~~
~~M. Miller, AREVA, Advisory~~Bruce ?, Areva, TITLE NEEDED
??, ATHOS Engineer, NAME AND TITLE NEEDED
~~S. Claunch, AREVA, Advisory Engineer~~

NRC Personnel
T. Blount, Deputy Division Director, Division of Reactor Safety
R. Lantz, Branch Chief, Projects Branch D
G. Warnick, Senior Resident Inspector

## LIST OF ITEMS OPENED, CLOSED AND DISCUSSED

Opened

| | | |
|---|---|---|
| 05000362/2012007-01 | URI | Adequacy of the Trip/Transient and Event Review Procedure (Section 1) |
| 05000362/2012007-02 | URI | Evaluation of Unit 3 Vibration and Loose Parts Monitoring System Alarms (Section 3) |
| 05000362/2012007-03 | URI | Evaluation of Retainer Bars Vibration during the Original Design of the Replacement Steam Generators (Section 4 |
| 05000362/2012007-04 | URI | Evaluation of Changes in Dimensional Controls during the Fabrication of Unit 2 and Unit 3 Replacement Steam Generators (Section 4) |
| 05000362/2012007-05 | URI | Shipping Requirements not in Accordance with Industry Standards (Section 7) |
| 05000362/2012007-06 | URI | Shipping Requirements not in Accordance with Design and Fabrication Specifications (Section 7) |
| 05000362/2012007-07 | URI | Unit 3 Steam Generator ~~3E0-88~~E088 Stresses Related to Handling (Section 7) |
| 05000362/2012007-08 | URI | Non-Conservative Thermal-Hydraulic Model Results (Section 8) |
| 05000362/2012007-09 | URI | Evaluation of the Effects of Divider Plate Weld Repairs in Unit 3 Replacement Steam Generators (Section 12) |
| 05000362/2012007-10 | URI | Evaluation of Departure of Method of Evaluation for 10-CFR 50.59 Processes (Section 13) |

Closed

None

Discussed

None

## LIST OF DOCUMENTS REVIEWED

AUDITS/SELF-ASSESSMENTS/QUALITY CONTROL DRAWINGS

SONGS DOCUMENTS

| Number | Title | Revision/Date |
|---|---|---|
| MHI-1-06 | Southern California Audit of Mitsubishi Heavy Industries | June 16, 2006 |
| MHI-1-09 | Southern California Audit of Mitsubishi Heavy Industries | April 27, 2009 |
| MHI-2-04 | Southern California Audit of Mitsubishi Heavy Industries | December 14, 2004 |
| SCES-007-10 | Procurement and Material Control Program Audit | September 14, 2010 |
| MHI-01-04 | Evaluation and Review of Contractor, Consultant, Utility or Licensee Audit Report | September 24, 2004 |
| | Status of Southern California Edison (SCE) Corrective Action Request (CAR) Nos. S-1918 and S-1932 Closure | March 23, 2007 |
| | Southern California Edison (SCE) Corrective Action Request (CAR) No. S-1991, Supplier Stop Work Order (SSWO) No. SSWO-001-08 | 1 |
| SO123-XV-50 | Corrective Action Program | 25 |
| | RSG-SCE/MHI-06-2233 – Southern California Edison (SCE) Corrective Action Request (CAR) No. S-1882 Closure | May 3, 2006 |
| | RSG-SCE/MHI-06-1916 - Southern California Edison (SCE) Corrective Action Request, (CAR) No. S-1906 Closure | February 22, 2006 |
| | Southern California Edison (SCE) Audit No. MHI-1-06 and Corrective Action Request (CAR) Nos. S-1915, S-1916, S-1917, and S-1918 | January 31, 2008 |
| AR# 040901345 | Qualification Letter | September 24, 2004 |

| Number | Title | Revision/Date |
|---|---|---|
| AR#0503014 58 | Qualification Letter | March 23, 2005 |
| AR#0605001 34 | Qualification Letter | May 10, 2006 |
| 6C294014 | Edison Material Supply Procurement Order for Mitsubishi Heavy Industries | September 28, 2004 |
| SO23-617-01 | Specifications for design and fabrication of RSG for Unit 2 and Unit 3 | 4 |
| SO23-617-02 | Specifications for Baseline Pre-Service Examination on Tubing for RSG | 1 |
| SO23-617-03 | Replacement Steam Generator Installation Unit 2 and 3 | 4 |
| SO23-617-04 | Specifications for the Transportation of Replacement Steam Generators | 1 |
| TL C001783 | San Onofre Topical Report Quality Assurance Manual | 64 |
| TL C001782 | San Onofre 2&3 FSAR Updated Quality Assurance Program Topical Report SCE-1 | 15 |
| | SONGS Unit 2 & 3 Replacement Steam Generator QA/QC Manufacturing Oversight Plan Japan Steel Works | 0 |
| | SONGS Unit 2 & 3 Replacement Steam Generator QA/QC Oversight Plan | 1 |
| | SONGS Unit 2 & 3 Replacement Steam Generator Receipt Inspection Plan | 0 |
| SGR-A10183 | Replacement Steam Generator Resident Oversight Plan | 1 |
| SGR-A10159 | San Onofre Nuclear Generating Station Unit 2 & 3 Steam Generator Replacement Project Plan | 1 |
| MHI-1SV-05 | Source Verification Report of MHI/Japan Steel Work | March 15, 2005 |
| MHI-1SV-06 | Source Verification Report of MHI/Japan Steel Work | February 7, 2006 |
| MHI-1SV-07 | Source Verification Report of MHI | March 20, 2007 |
| MHI-1SV-08 | Source Verification Report of MHI/Japan Steel Work | August 29, 2008 |
| MHI-2SV-05 | Source Verification Report of MHI | April 1, 2005 |

| Number | Title | Revision/Date |
|---|---|---|
| MHI-2SV-06 | Source Verification Report of MHI/Japan Steel Work | March 24, 2006 |
| MHI-2SV-07 | Source Verification Report of MHI | November 2, 2007 |
| MHI-3SV-05 | Source Verification Report of MHI/Japan Steel Work | May 3, 2005 |
| MHI-3SV-06 | Source Verification Report of MHI | May 3, 2006 |
| MHI-4SV-05 | Source Verification Report of MHI/Japan Steel Work | May 4, 2005 |
| MHI-4SV-06 | Source Verification Report of MHI/Japan Steel Work | May 23, 2006 |
| MHI-5SV-05 | Source Verification Report of MHI/Japan Steel Work | June 10, 2005 |
| MHI-5SV-06 | Source Verification Report of MHI | September 26, 2006 |
| MHI-6SV-05 | Source Verification Report of MHI | July 1, 2005 |
| MHI-6SV-06 | Source Verification Report of MHI | January 24, 2007 |
| MHI-7SV-05 | Source Verification Report of MHI/Japan Steel Work | August 12, 2005 |
| MHI-7SV-06 | Source Verification Report of MHI | January 16, 2007 |
| MHI-8SV-05 | Source Verification Report of MHI | March 26, 2007 |
| MHI-8SV-06 | Source Verification Report of MHI | Date? |
| MHI-9SV-05 | Source Verification Report of MHI/Japan Steel Work | October 13, 2005 |
| MHI-10SV-05 | Source Evaluation Report of MHI | February 8, 2006 |
| MHI-11SV-05 | Source Verification Report of MHI/Japan Steel Work | December 21, 2005 |
| SO123-XII-18.19 | Nuclear Oversight Procedure Supplier Audits | 10 |
| SO123-XII-7.12 | Nuclear Oversight Procedure Source Verification | 5 |

CALCULATIONS

| Number | Title | Revision |
|---|---|---|
| SO23-617-1-C275 | Design Report of the Channel Head Region | 6 |
| SO23-617-1-C514 | Design for RCS Flow Rate | 1 |
| SO23-617-1-M1562 | Retainer Bar Tube Wear Report | 0 |

CORRECTIVE ACTION REPORTS

| | | | | |
|---|---|---|---|---|
| | | | | |

DESIGN BASIS DOCUMENTS

| Number | Title | Revision |
|---|---|---|
| SO23-617-01 | Specification for Design and Fabrication of RSGs for Unit 2 and Unit 3 | 4 |
| SO23-617-1-M1492 | As-Built Reconciliation Report for Unit 3 | 2 |
| L5-04GA428 | Design of Anti-Vibration Bar | 5 |
| DBD-SO23-365 | Design Basis for Steam Generator and Secondary Side | 10 |

DESIGN CHANGE NOTIFICATIONS/SUPPLIER DEVIATION REQUESTS

| Number | Title | Revision |
|---|---|---|
| NECP 800071703 | Engineering Change Package, "Replacement Steam Generators" | 0 |
| SDR-007 43366-05007 | Circulation Ratio for RSG | 0 |
| SDR-037 43366-06037 | Tube-to-Tube Clearance in 2A RSG | 0 |
| SDR-047 43366-07047 | Tool Mark in 3A Tubesheet | 0 |
| SDR-050 43366-07050 | Tool Mark in 3B Tubesheet | 0 |

| Number | Title | Revision |
|---|---|---|
| SDR-051 43366-07051 | Unit 2A Lower Shell Assembly | 0 |
| SDR-053 43366-07053 | Unit 2B Lower Shell Assembly | 0 |
| SDR-059 43366-08059 | Unit 3B Lower Shell Assembly | 0 |
| SDR-064 43366-08064 | Axial Length of AVB | 0 |
| SDR-079 43366-08079 | Statistical Size of Tube-to-AVB Gap | 0 |
| SDR-082 43366-09082 | Divider Plate Repair of Unit 3 RSGs | 0 |
| SDR-086 10041870-09086 | Specifications for Unit 3 RSG Tube Material | 0 |
| SDR-098 10041870-10098 | Overall Height of 3A RSG | 0 |
| SDR-099 10041870-10099 | Perpendicularity and Parallelism of 3A RSG Key Bracket | 0 |
| SDR-100 10041870-10100 | Parallelism of 3B RSG Key Bracket | 0 |

DRAWINGS

| Number | Title | Revision |
|---|---|---|
| SO23-617-1-D103 | Design Drawing – Component and Outline Drawing 1 / 3 | 5 |
| SO23-617-1-D104 | Design Drawing – Component and Outline Drawing 1 / 3 | 2 |
| SO23-617-1-D106 | Design Drawing Tubesheet and Extension Ring 1 of 3 | 12 |
| SO23-617-1-D107 | Design Drawing Tubesheet and Extension Ring 2 of 3 | 5 |
| SO23-617-1-D108 | Design Drawing Tubesheet and Extension Ring 3 of 3 | 8 |
| | | |
| SO23-617-1-D109 | Design Drawing Lower Shell, Middle Shell, Transition Cone and Upper Shell Stub 1 of 4 | 5 |
| SO23-617-1-D110 | Design Drawing Lower Shell, Middle Shell, Transition Cone and Upper Shell Stub 2 of 4 | 7 |

| Number | Title | Revision |
|---|---|---|
| SO23-617-1-D111 | Design Drawing Lower Shell, Middle Shell, Transition Cone and Upper Shell Stub 3 of 4 | 4 |
| SO23-617-1-D112 | Design Drawing Lower Shell, Middle Shell, Transition Cone and Upper Shell Stub 4 of 4 | 4 |
| SO23-617-1-D113 | Design Drawing Channel Head 1 of 4 | 9 |
| SO23-617-1-D113 | Design Drawing Channel Head 1 of 4 | 15 |
| SO23-617-1-D114 | Design Drawing Channel Head 2 of 4 | 13 |
| SO23-617-1-D115 | Design Drawing Channel Head 3 of 4 | 5 |
| SO23-617-1-D116 | Design Drawing Tube Bundle 1 of 3 | 1 |
| SO23-617-1-D117 | Design Drawing Tube Bundle 2 of 3 | 1 |
| SO23-617-1-D118 | Design Drawing Tube Bundle 3 of 3 | 3 |
| SO23-617-1-D159 | Design Drawing Upper Shell, Upper Head Ring and Upper Head Top 1 of 4 | 7 |
| SO23-617-1-D160 | Design Drawing Upper Shell, Upper Head Ring and Upper Head Top 2 of 4 | 2 |
| SO23-617-1-D161 | Design Drawing Upper Shell, Upper Head Ring and Upper Head Top 3 of 4 | 4 |
| SO23-617-1-D162 | Design Drawing Upper Shell, Upper Head Ring and Upper Head Top 4 of 4 | 2 |
| SO23-617-1-D210 | Design Drawing of Moisture Separator Assembly 1 of 6 | 10 |
| SO23-617-1-D211 | Design Drawing of Moisture Separator Assembly 2 of 6 | 10 |
| SO23-617-1-D212 | Design Drawing of Moisture Separator Assembly 3 of 6 | 5 |
| SO23-617-1-D274 | Design Drawing Channel Head 4 of 4 | 4 |
| SO23-617-1-D294 | Design Drawing Tube Support Plate Assembly 1 of 3 | 3 |
| SO23-617-1-D295 | Design Drawing Tube Support Plate Assembly 2 of 3 | 4 |
| SO23-617-1-D296 | Design Drawing Tube Support Plate Assembly 3 of 3 | 5 |
| SO23-617-1-D383 | Design Drawing – Critical Field Interface Dimensions and Major Tolerances 1 / 3 | 7 |
| SO23-617-1-D391 | Design Drawing Wrapper Assembly 1 of 5 | 5 |
| SO23-617-1-D392 | Design Drawing Wrapper Assembly 2 of 5 | 0 |

| Number | Title | Revision |
|---|---|---|
| SO23-617-1-D393 | Design Drawing Wrapper Assembly 3 of 5 | 2 |
| SO23-617-1-D394 | Design Drawing Wrapper Assembly 4 of 5 | 2 |
| SO23-617-1-D395 | Design Drawing Wrapper Assembly 5 of 5 | 3 |
| SO23-617-1-D494 | Design Drawing – Divider Plate1 / 2 | 10 |
| SO23-617-1-D495 | Design Drawing – Divider Plate 2 / 2 | 6 |
| SO23-617-1-D507 | Design Drawing Anti-Vibration Bar Assembly 1 of 9 | 4 |
| SO23-617-1-D508 | Design Drawing Anti-Vibration Bar Assembly 2 of 9 | 2 |
| SO23-617-1-D509 | Design Drawing Anti-Vibration Bar Assembly 3 of 9 | 0 |
| SO23-617-1-D539 | Design Drawing Anti-Vibration Bar Assembly 4 of 9 | 0 |
| SO23-617-1-D540 | Design Drawing Anti-Vibration Bar Assembly 5 of 9 | 2 |
| SO23-617-1-D541 | Design Drawing Anti-Vibration Bar Assembly 6 of 9 | 2 |
| SO23-617-1-D542 | Design Drawing Anti-Vibration Bar Assembly 7 of 9 | 8 |
| SO23-617-1-D543 | Design Drawing Anti-Vibration Bar Assembly 8 of 9 | 3 |
| SO23-617-1-D544 | Design Drawing Anti-Vibration Bar Assembly 9 of 9 | 1 |
| SO23-617-1-D680 | Design Drawing – Tubing Expansion and Seal Welding | 3 |
| SO23-617-1-D1099 | Fabrication Drawing – General Shipping Arrangement [SON 2E89; SON 2E882E0-88] | 2 |
| SO23-617-1-D1100 | Fabrication Drawing – General Shipping Arrangement [SON 3E89; SON 3E88] | 2 |
| SO23-617-1-D1488 | Fabrication Drawing – Temporary Attachment For Channel Head and Tubesheet Welding (Unit 3) | 0 |
| L5-04FW111 | Detail of AVB 1 of 5 (Center Narrow AVB) | 6 |
| L5-04FW112 | Detail of AVB 2 of 5 (Center Wide AVB) | 2 |
| L5-04FW113 | Detail of AVB 3 of 5 (Side Narrow AVB) | 2 |
| L5-04FW114 | Detail of AVB 4 of 5 (Side Wide AVB for Hot Side) | 2 |
| L5-04FW115 | Detail of AVB 5 of 5 (Side Wide AVB for Cold Side) | 2 |

ENGINEERING REPORTS (ER)

| Number | Title | Revision |
|---|---|---|
| SO23-617-1-M1401 | Divider Plate Weld Joint Separation Root Cause Evaluation Report | 4 |
| SO23-617-1-C157 | Evaluation of Tube Vibration | 3 |
| SO23-617-1-C749 | Analytical Report of AVB Assembly | 4 |
| SO23-617-1-M1265 | Summary Design Report | 8 |
| SO23-617-1-M1231 | Performance Analysis Report | 3 |
| SO23-617-1-C682 | Analytical Report of Separator and Dryer Assemblies | 7 |
| SO23-617-01R3 | Design Report of Tube | 5 |

MHI DOCUMENTS

| Number | Title | Revision/Date |
|---|---|---|
| UHQ-08N013 | MHI Survey Report of Sumitomo Metal Industries, Limited. Steel Tube Works | 0 |
| UHQ-11N010 | MHI Survey Report of Sumitomo Metal Industries, Limited. Steel Tube Works | 0 |
| UHQ-05N015 | MHI Survey Report of Sumitomo Metal Industries, Limited. Pipe & Tube Works | 1 |
| UHQ-08N014 | MHI Survey Report of Sumitomo Metal Industries, Limited. Steel Tube Works | 0 |
| UHQ-11S005 | MHI Survey Report of Sumitomo Metal Industries, Limited. Steel Tube Works | 0 |
| UHQ-05N019 | MHI Survey Report of Sumitomo Metal Industries, Limited. Steel Tube Works | 0 |
| BUH94-06 | Quality Assurance Survey/Audit Procedure of Vendors | 6 |
| BUH94-06 | Vendor Evaluation Procedure | 9 |
| BUH94-06 | Vendor Evaluation Procedure | 13 |
| 5ZDD94-06 | Vendor Evaluation Procedure | 1 |

| Number | Title | Revision/Date |
|---|---|---|
| UHQ-08N013 | MHI Survey Report of Sumitomo Metal Industries, Limited. Steel Tube Works | 0 |
| UHW-68-06A002 | MHI Evaluation on Corrective Action Established by Sumitomo Metal Industries Limited | 0 |
| UHNR-SON-RSG-06N005 | Nonconformance Report for Alloy 690 SG Tubing for SONGS Unit 2 | 4 |
| UHQ-07N004 | MHI Audit Report of Sumitomo Metal Industries, Limited. Steel Tube Woks | 1 |
| UHCP-70N004 | Corrective Action Plan Followup Report | 0 |
| UES-20100006 | Qualified Vendor List | 18 |
| L5-04GB004 | Submittal Document Control List | 53 |
| UGNR-SON2-RSG-020 | Nonconformance Report Channel head for Unit 2A | February 2, 2006 |
| UGNR-SON2-RSG-038 | Nonconformance Report Unacceptable local diameter change of tube holes | June 2, 2006 |
| UGNR-SON2-RSG-052 | Nonconformance Report Unacceptable length of 10 tube hole pitch of tube support plate #3 | September 11, 2006 |
| UGNR-SON2-RSG-062 | Nonconformance Report Incorrect end caps of AVB 2ASN154C and AVB 2ASN164C | December 1, 2006 |
| UGNR-SON2-RSG-075 | Nonconformance Report Unacceptable gaps between tubes and AVBs | March 24, 2007 |
| UGNR-SON2-RSG-091 | Nonconformance Report Incorrect machining for steam flow limiting device | September 4, 2007 |
| UGNR-SON2-RSG-096 | Nonconformance Report Unacceptable dimensions for steam flow limiting device of Unit 2A | October 23, 2007 |
| UGNR-SON3-RSG-009 | Nonconformance Report Unacceptable local diameter change of tube holes | May 10, 2007 |
| UGNR-SON3-RSG-024 | Nonconformance Report Some gaps between tubes and AVBs are larger than the criterion | November 30, 2007 |

| Number | Title | Revision/Date |
|---|---|---|
| UHQ-08N013 | MHI Survey Report of Sumitomo Metal Industries, Limited. Steel Tube Works | 0 |
| UGNR-SON3-RSG-049 | Nonconformance Report Out of tolerance on hand holes inside diameter | March 2, 2009 |
| UGNR-SON3-RSG-055 | Nonconformance Report Divider plate metal repair butter/weld crack after post bake | September 11, 2009 |
| UGNR-SON-RSG-06N002 | Nonconformance Report Feedwater nozzle for unit 2 ID: 21721-101 | February 2, 2006 |
| ~~UGS-L5-050043~~ | ~~Anti-Vibration Bar Inspection Procedure (Individual Bar)~~ | ~~1~~ |
| ~~UGS-L5-050045~~ | ~~Inspection Procedure for Tube and Anti-Vibration Bar Inspection~~ | ~~10~~ |
| B91U-N0001 | Mitsubishi Heavy Industries Ltd Kobe Shipyard & Machinery Works Quality Assurance Manual (Nuclear) | 39 |
| UES-69-040038 | Mitsubishi Heavy Industries Ltd Kobe Shipyard & Machinery Works Quality Assurance Program Manual (Project Addenda) | 15 |
| UHH-G06A97 | Stop Work Order for FMA (Final Mill Annealing) on Manufacturing of Heat Transfer Tubing for SONGS RSG | 0 |

MISCELLANEOUS DOCUMENTS

| ~~Number~~ | ~~Title~~ | ~~Revision/Date~~ |
|---|---|---|
| AR 060500134 | Action Request: Qualification Letter | |
| AR 040901345 | Action Request: Qualification Letter | |
| AR 050301458 | Action Request: Qualification Letter | |
| | Setpoint Transmittal Unit 2 and 3 Gas Monitors | December 6, 2010 |
| | SONGS Unit 3 Chemistry/Operations Logs – SG Event Timeline | January 31, 2012 |
| | Radiation Monitor 3RT-7870 Setpoints | May 31, 2011 |
| | Radiation Monitor 3RT-7818A Setpoints | May 31, 2011 |

| ~~Number~~ | ~~Title~~ | ~~Revision/Date~~ |
|---|---|---|
| 2G-030-3 | Condenser Air Ejector Continuous Gas Post-Release Report | January 31, 2012 |
| SO23-617-01 | Specification for Design and Fabrication of RSGs for Unit 2 and Unit 3 | 4 |
| SO23-617-02 | Specification for Baseline Pre-Service Examination (PSE) on Tubing for Replacement Steam Generators | 1 |
| | Updated Final Safety Analysis Report for San Onofre Units 2 and 3 | April 2009 |
| SO23-617-1-M29 | Design Review Item List | 9 |
| DA 2002-92 | Dominion Audit of Mitsubishi Heavy Industries | June 9, 2002 |
| V03-008 | Omaha Public Power District Audit of Mitsubishi Heavy Industries | July 18, 2003 |
| 99901030/2008-201 | Mitsubishi Heavy Industries (MHI), Kobe, Japan, inspection of selected portions of MHI's Quality Assurance (QA) program, and 10 CFR Part 21 program | July 18, 2008 |
| 99901384/2009-201 | Sumitomo Metal Industries, Limited, Higashi-Mukojima Amagasaki, Japan, inspection of selected portions of Sumitomo's quality assurance (QA) program and 10 CFR Part 21 program | November 13, 2009 |
| SMI-AQA-9041 | Reply to Notice of Nonconformance(99901 384/2009-201-01) | 0 |
| ~~NRC Inspection Report 99901030/2008-201~~ | ~~Inspection of Selected Portions of MHI's Quality Assurance and 10 CFR Part 21 Programs~~ | ~~July 18, 2008~~ |

MODIFICATIONS

| Number | Title | Date |
|---|---|---|
| Engineering Change Package NECP 800071702 | 50.59 Screening and Evaluation for Replacement Steam Generators – Unit 2 | July 31, 2009 |

| | | |
|---|---|---|
| Engineering Change Package NECP 800071703 | 50.59 Screening and Evaluation for Replacement Steam Generators – Unit 3 | July 31, 2009 |

NUCLEAR NOTIFICATIONS

| | | | | |
|---|---|---|---|---|
| 201907899 | | | | |

*NN's issued as a result of inspection activities.

PROCEDURES

| Number | Title | Revision |
|---|---|---|
| SO123-ODCM | Offsite Dose Calculation Manual | 0 |
| SO123-0-47 | Notification and Reporting of Significant Events | 18 |
| SO123-III-5.9 | Manual Effluent Gaseous Release Permits, Setpoint Calculations, and Monitor Calibration Constant Evaluations | 8 |
| SO123-VIII-1 | EPIP: Recognition and Classification of Emergencies | 36 |
| SD-SO23-310 | System Description - Turbine Building Sampling System | 9 |
| SD-SO23-690 | System Description – Steam Generator E088/089 | 18 |
| SD-SO23-690 | System Description – Steam Generator Radiation Monitors RE-6753 & RE-6759 | 18 |
| SD-SO23-690 | System Description – Condenser Air Ejector Wide Range Radiation Monitors RE-7870A/B & Low Range Radiation Monitors RE-7818 | 18 |
| SB-SO-FB-006 | Divider Plate Weld Joint Repair Procedure | 10 |
| SB-SO-HT-1001 | Post Weld Heat Treatment Procedure | 22 |
| SO123-XXXII-2.27 | Supplier Deviation Requests (SDRs) | 5 |
| SO23-617-1-D104 | Design Drawing - Component and Outline Drawing 2/3 | 2 |
| SO23-617-1-D1099 | General Shipment Arrangement SON-2A | 4 |
| SO23-617-1-M1246 | Hydrostatic Test Procedure | 3 |
| SO23-617-1-M139 | Post Weld Heat Treatment Procedure | 21 |

| | | |
|---|---|---|
| SO23-617-1-M1395 | Divider Plate Weld Joint Procedure | 9 |
| SO23-617-1-M1398 | Divider Plate Weld Joint Repair Plan | 12 |
| SO23-617-1-M1461 | Additional Post Weld Heat Treatment Procedure for Divider Plate Weld Joint Repair | 0 |
| SO23-617-1-M616 | Tubesheet Drilling Procedure | 9 |
| SO23-617-1-M733 | Helium Leak Test Procedure of the Tube to Tubesheet Welds (High Pressure) | 5 |
| SO23-617-1-M735 | Helium Leak Test Procedure of the Tube to Tubesheet Welds (Low Pressure) | 3 |
| SO23-617-1-M819 | AVB Structure Assembly Procedure | 8 |
| SO23-617-1-M820 | Tubing and AVB Installation Procedure | 6 |
| SO23-617-1-M821 | Anti-Vibration Bar Inspection Procedure (After Assembly) | 5 |
| ~~SO123-XV-50~~ | ~~Corrective Action Program~~ | ~~25~~ |
| ~~SO123-XII-18.19~~UGS-L5-050043 | ~~Nuclear Oversight~~Anti-Vibration Bar Inspection Procedure ~~Supplier Audits~~(Individual Bar) | ~~10~~1 |
| ~~SO123-XII-7.12~~UGS-L5-050045 | ~~Nuclear Oversight~~Inspection Procedure ~~Source Verification~~for Tube and Anti-Vibration Bar Inspection | ~~5~~10 |

VENDOR DOCUMENTS

| Number | Title | Revision/Date |
|---|---|---|
| 51-9176667-001 | Engineering Information Record, "SONGS 2C17 & 3C17 Steam Generator Degradation Assessment" | 1 |
| UGNR-SON2-RSG-012 | DI for Tube Support Plate Material | 1 |

| Number | Title | Revision/Date |
|---|---|---|
| UGNR-SON2-RSG-014 | Discrepancy for tube thickness of TSP between Drawing and Purchase Specification | 0 |
| UGNR-SON2-RSG-015 | Unacceptable Indications by MT for wrapper support of Unit 2 #A | 1 |
| UGNR-SON2-RSG-021 | Unacceptable Indications by MT for Anti rotation support of Unit 2 #A | 0 |
| UGNR-SON2-RSG-027 | Unacceptable MT indication for Anti-Rotation Supports | 0 |
| UGNR-SON2-RSG-054 | Unacceptable length of 10 tube hole pitch of tube support Plate # 6 | 1 |
| UGNR-SON2-RSG-058 | Insufficient clearance between the tubes in Row No. 28 and 30 in Column No. 22 | 3 |
| UGNR-SON2-RSG-059 | Insufficient clearance between the tubes in Row No 92 and 94 in Column No. 34 | 0 |
| UGNR-SON2-RSG-067 | Unacceptable Gaps between Tubes and AVBs | 7 |
| UGNR-SON2-RSG-075 | Unacceptable gaps between Tubes and AVBs | 1 |
| UGNR-SON2-RSG-091 | Incorrect Machining for Steam Flow Limiting Device | 0 |
| UGNR-SON2-RSG-103 | Damaged Locking Plates of Vane Jacking Device | 9 |
| UGNR-SON2-RSG-109 | As built dimension of #2A RSG | 1 |
| UGNR-SON2-RSG-112 | As built dimension of #2B RSG | 0 |
| UGNR-SON3-RSG-001 | Tubesheet | 0 |
| UGNR-SON3-RSG-018 | Unacceptable local diameter change of Tube holes | 2 |
| UGNR-SON3-RSG-024 | Some Gaps between Tubes and AVBs are larger than the criterion | 1 |

| Number | Title | Revision/Date |
|---|---|---|
| UGNR-SON3-RSG-030 | Some gaps between tubes and AVBs are larger than the criterion | 0 |
| UGNR-SON3-RSG-051 | Divider Plate Weld Crack | 16 |
| UGNR-SON3-RSG-052 | Divider Plate Weld Crack | 19 |
| UGNR-SON3-RSG-057 | Extension of Tubesheet PWHT Duration | 1 |
| UGNR-SON3-RSG-059 | Out of Tolerance dimensions on Primary Inlet/Outlet Nozzles and Support Skirt | 1 |
| UGNR-SON3-RSG-062 | Out of tolerance dimensions on Primary Inlet/Outlet Nozzles and Support Skirt (#B RSG) | 1 |
| UGNR-SON3-RSG-067 | UT indications in the Alloy 600/690 butter of Divider Plate Weld Groove | 0 |
| UGNR-SON3-RSG-074 | As built dimensions of #3A RSG (Overall Height) | 0 |
| UGNR-SON3-RSG-075 | As built dimension of #3A RSG | 1 |
| UGNR-SON3-RSG-076 | As built dimension of #3B RSG | 0 |
| UHNR-SON3-RSG-07N001 | Divider Plates for Unit 3 | 0 |
| Heat Treatment Record 40010SG-B-900D-R1-68 | Heat Treatment Chart for SG3 | April 4, 2012 |
| SO23-617-1-M149 | Purchase Specification for Heat Transfer Tubing | 4 |
| Fabrication Process Sheet 3901-SG-A-400E (Order 2563901/G101) | Rework of AVB Insertion for SONGS Unit 2 Replacement Steam Generator #A – Lower Portion | 1 |

| Number | Title | Revision/Date |
|---|---|---|
| | | |
| Fabrication Process Sheet 3901-SG-A-400D (Order 2563901/2300) | Helium Leak Test for SONGS Unit 2 Replacement Steam Generator #A – Lower Portion | 0 |
| TSN-5050 | Control Document Status list For Alloy 690 SG Tubing | 2 |
| TSN-5051 | Program of Preproduction Qualification (PPQ) For Alloy 690 SG Tubing | 3 |
| TSN-5053 | Melting Procedure for Alloy 690 SG Tubing | 0 |
| TSN-5054 | Identification and Traceability Procedure for Alloy 690 SG Tubing | 2 |
| TSN-5055 | Prohibited and Detrimental Material Control Procedure for Alloy 690 SG Tubing | 0 |
| TSN-5072 | Sampling Test Specimen Procedure for Alloy 690 SG Tubing | 2 |
| TSN-5073 | Chemical Analysis Procedure for Alloy 690 SG Tubing | 1 |
| TSN-5074 | Inclusion Test Procedure for Alloy 690 SG Tubing | June 4, 2005 |
| 005F-No.4316 | PPQ Test Results of Alloy 690 SG Tubing for San Onofre Nuclear Generating station Unit 2&3 | 2 |
| 4009-3ir01 | Moody International Ltd Inspection Report of Sumitomo Metal Industries | September 28, 2005 |

## SEQUENCE OF EVENTS

### San Onofre Nuclear Generating Station, Unit 2 and 3 Steam Generators

| Date | Event Description |
|---|---|
| November 2001 | Licensee forms a team to study the viability of replacing the steam generators |
| May 7, 2002 | Vendor benchmarking commences |
| July 2002 | Bechtel replacement study complete |
| November 7, 2003 | Replacement steam generator specification complete |
| December 12, 2003 | Replacement steam generator specification sent to procurement office |
| December 21, 2003 | Replacement steam generator request for proposal issued |
| February 17, 2004 | Bechtel installation study report completed |
| February 27, 2004 | Steam generator replacement request filed with California Public Utility Commission |
| February 27, 2004 | Replacement steam generator bids received by SCE |
| July 28, 2004 | Replacement steam generator vendor selected |
| August 2, 2004 | Replacement steam generator bid evaluation review board start |
| September 13, 2004 | Replacement steam generator bid evaluation completed |
| September 16, 2004 | SCE Board of Directors approval for Mitsubishi to design and manufacture steam generators |
| September 30, 2004 | Replacement steam generator contract signed |
| September 30, 2004 | Fabrication of Unit 2 and Unit 3 steam generators commences at Mitsubishi |
| November 2004 | SCE performs first full quality assurance audit of Mitsubishi |
| March 2, 2005 | Replacement steam generator installation specification sent to procurement office |
| March 17, 2005 | Mitsubishi/SCE anti-vibration bar design discussion |
| March 2005 | SCE performs follow-up surveillance audit of Mitsubishi |
| March 23, 2005 | SCE places conditional qualification on Mitsubishi |

| | |
|---|---|
| September 21, 2005 | Final environmental impact report released to public |
| October 2005 | SCE performs follow-up quality assurance audit of Mitsubishi |
| December 15, 2005 | California Public Utility Commission approval received |
| December 15, 2005 | Installation contract signed with Bechtel |
| February 2006 | SCE performs follow-up quality assurance audit of Mitsubishi |
| March 10, 2006 | Edison International Company Board of Directors approval of steam generator replacement project |
| April 22, 2006 | SONGS Unit 2 refueling outage completed |
| May 1, 2006 | Replacement steam generator transportation specification issued |
| May 10, 2006 | SCE removes conditional qualification from Mitsubishi |
| September 27, 2006 | Sumitomo Metal Industries issues a non-conformance report on some tubing for non-conformance to specifications associated with the final mill annealing process |
| September 27, 2006 | Mitsubishi issues stop work order to Sumitomo |
| September 28, 2006 | Mitsubishi issues corrective action request to Sumitomo based on the final mill annealing non-conformance report |
| September 29, 2006 | Mitsubishi visits Sumitomo to conduct root cause investigation |
| October 3, 2006 | Mitsubishi visits Sumitomo to confirm the adequacy of the corrective actions taken to address the root cause findings from the September 29, 2006 meeting |
| October 3, 2006 | Mitsubishi releases stop work order after confirming adequacy of Sumitomo's corrective actions |
| November 10, 2006 | Non-conformance report associated with final mill annealing process is closed |
| March 12, 2007 | Corrective action request associated with the final mill annealing non-conformance report closed |
| May 8, 2007 | Mitsubishi performs followup audit at Sumitomo and issues corrective action request for two findings in the audit |
| July 17, 2007 | Sumitomo submits corrective actions taken for the findings of the May 8, 2007 audit; Mitsubishi closes corrective action request. |
| September 13, 2006 | Mitsubishi/SCE technical meeting regarding anti-vibration bars |

| | |
|---|---|
| April 2008 | Fabrication of Unit 2 steam generators complete |
| April – June 2008 | Mitsubishi performs primary and secondary side hydrostatic pressure tests of Unit 2 steam generators |
| July 4, 2008 | AREVA performs baseline pre-service eddy current examinations on steam generator 2E0-89 at Mitsubishi facilities in Kobe, Japan |
| July 18, 2008 | AREVA performs baseline pre-service eddy current examinations on steam generator 2E0-88 at Mitsubishi facilities in Kobe, Japan |
| ~~July 18, 2008~~ | ~~NRC Inspection Report 99901030/2008-201 was issued. An inspection was completed at the Mitsubishi facility in Kobe, Japan. No violation or non-conformances were identified~~ |
| September and October 2008 | Final inspection for Unit 2 steam generators is completed. Primary and secondary sides filled with nitrogen. |
| December 16, 2008 | Unit 2 steam generators shipped from Kobe, Japan |
| February 14, 2009 | Unit 2 steam generators arrive at SONGS |
| Early March 2009 | Fabrication of Unit 3 steam generators complete |
| Middle March 2009 | Primary and secondary hydrostatic pressure tests conducted on Unit 3 steam generators |
| March 18, 2009 | Unit 3 divider plate weld failure discovered |
| March – July 2009 | Root cause evaluation of the divider plate-to-tubesheet weld conducted by Mitsubishi |
| March – June 2009 | Repair procedures developed for Unit 3 steam generators |
| June 2009 | Repair work on Unit 3 steam generators commences |
| July 2009 | AREVA performs final pre-service eddy current examinations on Unit 2 steam generators at SONGS |
| September 2009 – April 2010 | Unit 2 performs a refueling outage and installs the replacement steam generators |
| March 29, 2010 | Repair work to Unit 3 steam generator 3E0-89 complete |
| April 5, 2010 | Repair work to Unit 3 steam generator 3E0-88 complete |
| April 2010 | Unit 2 recommences power operations |
| April 18, 2010 | Unit 3 steam generator 3E0-89 passes primary side hydrostatic pressure retest |

| | |
|---|---|
| April 24, 2010 | Unit 3 steam generator 3E0-88 passes primary side hydrostatic pressure retest |
| June 2010 | AREVA performs baseline pre-service eddy current examinations on Unit 3 steam generators at Mitsubishi facilities in Kobe, Japan |
| August 2, 2010 | Unit 3 steam generators shipped |
| October 4, 2010 | Unit 3 steam generators arrive at SONGS |
| October 2010 – February 2011 | Unit 3 performs a refueling outage and installs the replacement steam generators |
| February 2011 | Unit 3 recommences power operations |
| January 10, 2012 | Unit 2 refueling outage start |
| January 31, 2012 | Unit 3 tube leak; rapid shutdown commences |
| February 2, 2012 | Unit 3 reaches cold shutdown conditions |
| February 12, 2012 | Unit 3 eddy current inspections commence on both steam generators |
| March 13, 2012 | In-situ pressure testing commences on tubes in steam generator 3E0-88 of Unit 3 |
| March 14, 2012 | In-situ pressure test failures on tubes located in Row 106 Column 78, Row 102 Column 78, and Row 104 Column 78 of steam generator 3E0-88 |
| March 15, 2012 | In-situ pressure test failures on tubes located in Row 100 Column 80, Row 107 Column 77, Row 101 Column 81, and Row 98 Column 80 of steam generator 3E0-88 |
| March 16, 2012 | In-situ pressure test failure on tube located in Row 99 Column 81 of steam generator 3E0-88 |
| March 16 – 21, 2012 | The 65 remaining tubes in steam generator 3E0-88 pass in-situ pressure testing |
| March 15 – 21, 2012 | The 56 identified tubes in steam generator 3E0-89 of Unit 3 are in-situ pressure tested and all tubes passed. |
| March 19 – 29, 2012 | NRC Augmented Inspection Team performs inspections at SONGS |
| March 23, 2012 | NRC received a letter from SCE outlining their commitments for corrective actions prior to restart of both Unit 2 and Unit 3 |

| | | |
|---|---|---|
| March 27, 2012 | NRC issues a Confirmatory Action Letter to SCE | Form |
| June 18, 2012 | NRC conducts public Augmented Inspection Team exit meeting near SONGS | Form |

UNITED STATES
NUCLEAR REGULATORY COMMISSION
REGION IV
1600 EAST LAMAR BLVD
ARLINGTON, TEXAS 76011-4511

Mr. Peter Dietrich
Senior Vice President and
Chief Nuclear Officer
Southern California Edison Company
San Onofre Nuclear Generating Station
P.O. Box 128
San Clemente, CA 92674-0128

SUBJECT: SAN ONOFRE NUCLEAR GENERATING STATION – NRC AUGMENTED INSPECTION TEAM REPORT 05000362/2012007

Dear Mr. Dietrich:

The U. S. Nuclear Regulatory Commission (NRC) completed an inspection at your San Onofre Nuclear Generating Station (SONGS). The enclosed report documents the inspection results, which were discussed with you and other members of your staff during a public exit meeting on June 18, 2012.

Unit 3 had been operating for approximately one year following replacement of the steam generators when on January 31, 2012, control room operators received alarms, that indicated reactor coolant was leaking into steam generator 3E0-88. The leak was unexpected, and the control room operators responded in accordance with their procedures to perform a rapid shutdown, since the leak, although small, had increased enough in a short period of time to warrant the precautionary shutdown. The estimated leak rate was 75 gallons per day. The facility license allows full power operation with a steady leak rate of less than 150 gallons per day.

The first indication of the leak was from the main condenser air ejector radiation monitors reaching their alarm set point. The radiation monitors continuously sample from a vent stack for the purpose of rapidly identifying steam generator tube leaks. This was a direct release of radioactivity to the atmosphere, which is allowed by the facility license, up to limits in the regulations. The licensee reviewed the amount of gaseous radioactivity released and estimated a dose of approximately 0.0000452 mrem to a member of the public. The annual regulatory limit to a member of the public is 100 mrem per year. During a radiation protection inspection the week of February 13, 2012, the team reviewed the licensee dose estimates and did not identify any issues.

Unit 3 control room operators performed a controlled shutdown of Unit 3 on January 31, 2012, and reached cold shutdown conditions on February 2, 2012. The operators then prepared the steam generators for tube inspections, which were started on February 12, 2012. The first

inspection confirmed the location of the leak in steam generator 3E0-88. One tube was found with a small leak and no other tubes were leaking.

The licensee completed an extensive and expanded eddy current inspection of 100 percent of the steam generator tubes in both Unit 3 steam generators. Following pre-established testing requirements, the licensee identified 129 tubes in Unit 3 (56 tubes in steam generator 3E0-89 and 73 tubes in steam generator 3E0-88) that required in-situ pressure testing. This testing began on March 13, 2012, and was performed under ambient conditions.

Of the 129 tubes tested, a total of 8 tubes failed in-situ pressure testing which included the original tube that was leaking. All of the failed tubes occurred in steam generator 3E0-88. Three of the tubes failed at or below a test pressure (3200 psi) equivalent to a design basis main steam line break differential pressure and temperature. The remaining five tubes failed near, but below the maximum differential test pressure of 5250 psig. This test pressure was equivalent to the minimum burst pressure capacity required by the plant technical specifications.

In accordance with Management Directive 8.3, "NRC Incident Investigation Program," deterministic and conditional risk criteria were used to evaluate the level of NRC response for this operational event. This event met three deterministic criteria (involved a major deficiency in design having potential generic safety implications; led to a significant loss of integrity of the primary coolant pressure boundary; and, involved an emergency or non-emergency event or situation, related to the health and safety of the public or on-site personnel or protection of the environment, for which a 10 CFR 50.72 report has been submitted that is expected to cause significant, heightened public or government concern) and the conditional large early release probability for the event was estimated to be in the overlap range for a special inspection/augmented inspection. Based on deterministic criteria being met and the risk assessment of this condition, Region IV, in consultation with the Office of Nuclear Reactor Regulation and Office of Nuclear Security and Incident Response, concluded that the NRC response should be an augmented team inspection.

This augmented inspection was chartered, in part, to identify the circumstances surrounding the tube degradation; review the licensee's actions following discovery of the conditions; evaluate the licensee's review of potential causes of the unusual steam generator tube wear; review the steam generator modeling; and, assess the differences between Unit 2 and Unit 3 steam generators.

Based on inspection, the team concluded that: (1) plant operators responded to the event in accordance with procedures in a manner that protected public health and safety; (2) safety systems were maintained and responded in accordance with the plant design; and (3) the loss of steam generator tube integrity was a serious safety issue that must be resolved. The purpose of this inspection was to gather facts and identify issues requiring followup, and, as such, no findings were identified. Ten items requiring additional followup are documented as unresolved items in the enclosed report.

In accordance with 10 CFR 2.390 of the NRC's "Rules of Practice," a copy of this letter, its enclosure, and your response (if any) will be available electronically for public inspection in the NRC Public Document Room or from the Publicly Available Records (PARS) component of the NRC's document system (ADAMS). ADAMS is accessible from the NRC Web site at http://www.nrc.gov/reading-rm/adams.html (the Public Electronic Reading Room).

Sincerely,

Elmo E. Collins
Regional Administrator

Docket No.: 05000362
License No: NPF-15

Enclosure: Inspection Report 05000362/2012-007
w/Attachment: Supplemental Information

cc w/ encl: Electronic Distribution

DISTRIBUTION:
Regional Administrator (Elmo.Collins@nrc.gov)
Deputy Regional Administrator (Art.Howell@nrc.gov)
DRP Director (Kriss.Kennedy@nrc.gov)
DRP Deputy Director (Allen.Howe@nrc.gov)
DRS Director (Tom.Blount@nrc.gov)
DRS Deputy Director (Patrick.Louden@nrc.gov)
Senior Resident Inspector (Greg.Warnick@nrc.gov)
Resident Inspector (John.Reynoso@nrc.gov)
SONGS Administrative Assistant (Heather.Hutchinson@nrc.gov)
Branch Chief, DRS/PSB2 (Greg.Werner@nrc.gov)
Branch Chief, DRP/D (Ryan.Lantz@nrc.gov)
Senior Project Engineer, DRP/D (Nick.Taylor@nrc.gov)
Project Engineer, DRP/D (David.You@nrc.gov)
Project Engineer, DRP/D (Brian.Parks@nrc.gov)
Public Affairs Officer (Victor.Dricks@nrc.gov)
Public Affairs Officer (Lara.Uselding@nrc.gov)
Branch Chief, DRS/TSB (Dale.Powers@nrc.gov)
RITS Coordinator (Marisa.Herrera@nrc.gov)
Regional Counsel (Karla.Fuller@nrc.gov)
Congressional Affairs Officer (Jenny.Weil@nrc.gov)
OEMail Resource
RIV/ETA: OEDO (Michael.McCoppin@nrc.gov)
DRS/TSB STA (Dale.Powers@nrc.gov)
RSLO (Bill.Maier@nrc.gov)
D/DIR, DORL (Louise.Lund@nrc.gov)
PM (Randy.Hall@nrc.gov)
D: NRR (Eric.Leeds@nrc.gov)
D: NSIR (Jim.Wiggins@nrc.gov)
D: NRO (Glen.Tracy@nrc.gov)
NRR/LPL4 (Michael.Markley@nrc.gov)
NRR/IOEB (Harold.Chernoff@nrc.gov)
EDO (Bill.Borchardt@nrc.gov)
DEDR (Michael.Johnson@nrc.gov)
DIR, DORL Michele.Evans@nrc.gov
DIR, DIRS Ho.Nieh@nrc.gov
D/DIR, DIRS John.Lubinski@nrc.gov

DOCUMENT NAME: S:DRS\REPORTS\SONGS 2012007 AIT-GEW ML12188A748

| | | | | | |
|---|---|---|---|---|---|
| SUNSI Rev Compl. | ☑Yes ☐ No | ADAMS | ☑Yes ☐ No | Reviewer Initials | GEW |
| Publicly Avail. | ☑Yes ☐ No | Sensitive | ☐Yes ☑ No | Sens. Type Initials | GEW |

| AIT Member/RIV | AIT Member/RII | AIT Member/NRO | AIT Member/NRR | AIT Member/NRR | AIT Member/RES |
|---|---|---|---|---|---|
| JReynoso | JRivera-Ortiz | JOrtega-Luciano | EMurphy | AJohnson | CThurston |
| | | | | | |
| | | | | | |
| AIT Team Leader/RIV | D:DRS | BC/D:DRP | DRA | RA | |
| GWerner | TBlount | RLantz | AHowell | ECollins | |
| | | | | | |
| | | | | | |

OFFICIAL RECORD COPY

## EXECUTIVE SUMMARY

On January 31, 2012, San Onofre Nuclear Generating Station (SONGS) Unit 3 control room operators received an alarm that indicated a primary-to-secondary reactor coolant leak from steam generator 3E0-88. Although the leak rate was small, it increased enough in a short period of time for the licensee to perform a rapid shutdown. The estimated leak rate was 75 gallons per day. The facility license allows full power operation with a steady state leak rate of less than 150 gallons per day. On February 2, 2012, Unit 3 reached cold shutdown conditions.

On February 12, 2012, Southern California Edison (SCE) commenced eddy current inspections of 100 percent of the tubes in both Unit 3 steam generators. During these inspections, the licensee discovered unexpected wear in both steam generators, including wear at retainer bars (similar to the wear found in Unit 2 steam generators) and significant tube-to-tube wear in the free-span areas. The inspections identified 56 tubes in steam generator 3E0-89 and 73 tubes in steam generator 3E0-88 that SCE performed in-situ pressure testing on to determine if they met the structural integrity requirements in plant technical specifications.

From March 13 – 21, 2012, AREVA conducted in-situ pressure testing of the suspect tubes in both steam generators. There were a total of eight tube failures during testing, all in steam generator 3E0-88. These tubes failed to satisfy the tube integrity performance criteria. At the time of the augmented team inspection, no stabilization or plugging of tubes had been performed in Unit 3 because the licensee was still conducting a cause evaluation of the failed tubes. There were two members of the Augmented Inspection Team on-site during the week of March 12 that observed portions of the in-situ pressure testing.

On March 23, 2012, NRC received a letter from SCE outlining their commitments for corrective actions prior to restart of both Unit 2 and Unit 3.

On March 27, 2012, the NRC issued a Confirmatory Action Letter to SCE, which outlined specific actions the licensee must complete before restarting Units 2 and 3 that included identifying the cause of the tube wear; taking corrective actions to prevent loss of tube integrity; and performing a mid-cycle outage to perform tube inspections.

From March 19 – 29, 2012, the NRC Augmented Inspection Team performed on-site inspections at SONGS. After the on-site portion was completed, the team continued to review various documents and attended a number of expert panels associated with the cause evaluations, thermal/hydraulic modeling, and Unit 2 operational assessment. The team identified ten unresolved items that warranted additional follow-up: (1) adequacy of the post trip/transient procedure; (2) evaluation and disposition of the Unit 3 loose parts monitor alarms; (3) design of retainer bar; (4) control of original design dimensions; (5) evaluation of and controls for divider plate repair; (6) atmospheric controls of Unit 3 steam generators during shipment; (7) no tube bundle support used during shipping; (8) evaluation and disposition of accelerometers; (9) adequacy of Mitsubishi's thermal-hydraulic model; and (10) change of methodologies associated with 10 CFR 50.59 review.

The team determined: (1) plant operators responded to the event in accordance with procedures in a manner that protected public health and safety; (2) equipment responded in accordance with the plant design; and (3) the cause evaluations for Unit 2 and Unit 3 tube wear were appropriate.

At the time of the leak on Unit 3 steam generator 3E0-88, Unit 2 had completed eddy current testing of all the tubes in both steam generators as part of their first refueling outage subsequent to the steam generators being replaced in 2009. The eddy current testing did identify significant tube wear around the upper retainer bar, with one tube requiring in-situ pressure testing. Wear indications were found at anti-vibration bar supports, tube support plates and at a foreign object (that was removed). Southern California Edison did determine the cause of tube wear in Unit 2 to be from vibration of the tubes against the retainer and anti-vibration bars. Initially, no tube-to-tube wear was identified. Because of the extensive tube-to-tube wear identified on Unit 3, SCE conducted additional eddy current testing on 1375 tubes on each Unit 2 steam generator. This testing was completed using a more sensitive probe in the same area where tube-to-tube wear was identified on Unit 3. The licensee identified that two tubes in Unit 2 exhibited tube-to-tube wear similar to the wear identified in Unit 3 steam generators. Initially, these findings resulted in a total of 94 plugged tubes, with 15 tubes stabilized in steam generator 2E0-89. For steam generator 2E0-88 this initially resulted in 98 plugged tubes, with 18 tubes stabilized. Additional plugging and stabilizing was completed for Unit 2 steam generators to address the causes of tube-to-tube wear identified. The corrective actions taken to address the causes of the tube-to-tube wear will be inspected as part of the Confirmatory Action Letter and documented in Inspection Report 05000361, 362/2012009.

Overall, the team concluded that SCE was pursuing the causes of the unexpected Unit 3 steam generator tube-to-tube degradation. In an effort to identify the causes, SCE brought in a large number of outside industry experts, consultants, and steam generator manufacturers, including Westinghouse and AREVA to perform thermal-hydraulic and flow induced vibration modeling and analysis. The licensee identified the most probable causes of the tube-to-tube wear as a combination of higher than predicted thermal/hydraulic conditions and improvements in the manufacturing of the Unit 3 steam generators. The improvements in the manufacturing resulted in less contact forces between the anti-vibration bars and the tubes. The combination of these causes allowed fluid-elastic instability vibration to occur. Additional on-site inspection will be required to review and closeout the unresolved items.

TABLE OF CONTENTS


**EXECUTIVE SUMMARY** ..... - 1 -

**SUMMARY OF FINDINGS** ..... - 2-

**1.0 Description of Event (Charter Item 1)** ..... - 3 -

1.1 Sequence of Events ..... - 3 -

1.2 System Descriptions ..... - 6 -

1.3 Resident Inspectors' Assessment of Steam Generator Tube Leak Event Response ..... - 7 -

1.4 Description of Steam Generator Inspections at SONGS Unit 2 ..... - 9 -

1.5 Description of Steam Generator Inspections at SONGS Unit 3 ..... - 12 -

1.6 In-Situ Pressure Testing ..... - 13 -

**2.0 Probable Cause Evaluation (Charter Item 2)** ..... - 15 -

2.1 SONGS Cause Evaluation ..... - 16 -

2.2 Mitsubishi Cause Evaluation ..... - 17 -

**3.0 Operational Differences in Configuration and Operation Between Unit 2 and 3 (Charter Item 3)** ..... - 20 -

**4.0 Design and Manufacturing Differences (Charter Item #4) (Mitsubishi Heavy Industries Charter Item 1)** .. - 22 -

**5.0 Quality Assurance/Quality Control (Charter Item 5) (Mitsubishi Charter Item 4)** ..... - 35 -

5.1 SONGS Quality Assurance/Quality Control ..... - 36 -

5.2 Mitsubishi Heavy Industries Quality Assurance/Quality Control ..... - 37 -

5.3 Quality Assurance Conclusion ..... - 39 -

**6.0 Implementation of Steam Generator Industry Information (Charter Item 6) (Mitsubishi Heavy Industries Charter Item 3)** ..... - 40 -

**7.0 Packing, Shipping, Handling, and Receipt Inspection (Charter Item 7)** ..... - 43 -

**8.0 Thermal-hydraulic and Flow Induced Vibration Modeling (Charter Item 8)** ..... 50

8.1 Thermal-hydraulic Assessments ..... - 47 -

8.2 NRC ATHOS Results ..... - 51 -

8.3 Conclusion ..... - 55 -

**9.0 Risk Assessment (Charter Item 9)** ..... - 56 -

**10.0 Assess Quality Assurance, Radiological Controls, and Safety Culture Components (Charter Item 10)** - 56 -

**11.0 Operational impacts from Unit 3 to Unit 2 (Charter Item 11)** ..... - 57 -

**12.0 Mitsubishi Divider Plate Manufacturing and Weld Issues (Mitsubishi Heavy Industries Charter Item 2)** ... - 58 -

**13.0 Office of Nuclear Reactor Regulation Review of SONGS 50.59 Evaluation** ..... - 62 -

**14.0 Exit Meeting Summary** ..... - 64 -

**ATTACHMENT 1: SUPPLEMENTAL INFORMATION** ..... A1-1

**ATTACHMENT 2: SEQUENCE OF EVENTS** ..... A2-1

**U.S. NUCLEAR REGULATORY COMMISSION**
**REGION IV**

| | |
|---|---|
| Docket: | 05000362 |
| License: | NPF-15 |
| Report: | 05000362/2012007 |
| Licensee: | Southern California Edison Company |
| Facility: | San Onofre Nuclear Generating Station |
| Location: | 5000 S. Pacific Coast Hwy<br>San Clemente, California |
| Dates: | March 15 through June 18, 2012 |
| Team Leader: | G. Werner, RIV/Branch Chief/Plant Support Branch 2 |
| Inspectors: | A. Johnson, NRR/Materials Engineer<br>E. Murphy, NRR/Senior Materials Engineer<br>J. Ortega-Luciano, NRO/Reactor Operations Engineer<br>J. Reynoso, RIV/Resident Inspector<br>J. Rivera-Ortiz, RII/Senior Reactor Inspector<br>C. Thurston, RES/Reactor Systems Engineer |
| Approved By: | Elmo E. Collins, Regional Administrator |

## SUMMARY OF FINDINGS

IR 05000362/2012007, 03/15/2012 through 06/18/2012, San Onofre Nuclear Generating Station; Augmented Inspection Team.

An Augmented Inspection Team was approved on March 16, 2012. Two inspectors on the team were onsite observing in-situ pressure testing the week of March 12. The remaining inspectors were dispatched to the site on March 19, 2012, to assess the facts and circumstances surrounding the tube leak and unexpected wear of tubes in Unit 3 steam generators. The Augmented Inspection Team was established in accordance with NRC Management Directive 8.3, "NRC Incident Investigation Program," and implemented using Inspection Procedure 93800, "Augmented Inspection Team." The inspection was conducted by a team of inspectors from the NRC's Region IV and Region II offices, the resident inspector from San Onofre Nuclear Generating Station, one engineer from the NRC Office of New Reactors, two engineers from the NRC Office of Nuclear Reactor Regulation, and one engineer from the NRC Office of Research. The team identified 10 issues that will require additional NRC inspection. These issues are tracked as unresolved items in this report.

A. NRC-Identified and Self-Revealing Findings

None

B. Licensee-Identified Violations

None

1.0 Description of Event (Charter Item 1)

1.1 Sequence of Events

In November 2001, SCE formed a team to study the viability of replacing the Unit 2 and Unit 3 original steam generators. The licensee performed an assessment of six steam generator vendors, which included vendor benchmarking, development of the replacement steam generator design specifications, a steam generator request for proposal, and a steam generator bid evaluation. In September 2004, the licensee selected Mitsubishi Heavy Industries (Mitsubishi) as the manufacturer of the replacement steam generator.

A general description and comparison of the Unit 2 and Unit 3 steam generators is included in Section 1.2.1 of this report.

In September 2004, Mitsubishi commenced fabrication of Unit 2 steam generators 2E0-89 and 2E0-88, and completed fabrication in April 2008.

At the time of the contract signing in September 2004, Mitsubishi had a quality assurance program in place that had been approved by the licensee, by taking credit for other utilities' reviews of Mitsubishi's quality assurance program. The licensee informed Mitsubishi that once enough fabrication was underway to support an evaluation, the licensee would perform an audit to confirm that their quality assurance program was operating properly.

In November 2004, the licensee performed an audit of the Mitsubishi quality assurance program at their facilities in Kobe, Japan, and then followed up with a surveillance inspection in March 2005. As a result of these two activities, the licensee informed Mitsubishi that additional oversight of Mitsubishi's design control activities was required. The licensee informed Mitsubishi that the additional oversight conditions would remain in place until such time that Mitsubishi had demonstrated improved design control performance, which would be verified by the licensee. After implementing the extra quality control steps, Mitsubishi submitted a letter to SCE stating that they were ready for the conditional qualification to be lifted. The licensee performed followup audits of Mitsubishi in October 2005 and February 2006, but still found enough instances of design control issues that the additional oversight requirements of the conditional qualification were not lifted. In May 2006, SCE was able to verify that Mitsubishi had demonstrated improved design control performance and therefore removed the conditional qualification of Mitsubishi.

After fabrication of the Unit 2 steam generators was complete in April 2008, Mitsubishi performed hydrostatic pressure tests of the primary and secondary sides of the Unit 2 steam generators. In July 2008, after completion of the hydrostatic pressure tests, AREVA performed the baseline eddy current pre-service examinations of the Unit 2 steam generators at the Mitsubishi facilities in Japan. The final inspections for the Unit 2 steam generators were completed in September and October 2008, followed by filling the primary and secondary sides of the Unit 2 steam generators with nitrogen. The Unit 2 steam generators were shipped from the Mitsubishi facilities in December 2008 and received on site at SONGS in February 2009. In July 2009, AREVA performed the

final eddy current pre-service examination on the Unit 2 steam generators at SONGS. The baseline and final eddy current pre-service examinations were performed in Japan and at SONGS, respectively, to assess whether any changes to the steam generator tubing had resulted from shipping, and no changes were identified.

The Unit 2 steam generators were installed during a refueling outage, between September 2009 and April 2010. On April 13, 2010, Unit 2 returned to power operations. NRC Engineering inspectors performed inspections in accordance with procedures IP 50001 (Inspection 50.59), Steam Generator Replacement Inspection and IP 71111.17, Evaluations of Changes, Tests, or Experiments and Permanent Plant Modifications. The results of the inspections of the replacement steam generators for Unit 2 are documented in NRC Inspection Report 05000361/2009007.

The fabrication of the Unit 3 steam generators 3E0-89 and 3E0-88 was completed between September 2004 and April 2010. The design specifications of the Unit 2 and Unit 3 steam generators were the same when the contract between the licensee and Mitsubishi was signed; however, due to a fabrication issue, there was a modification to the divider plate-to-channel head weld requirements for the Unit 3 steam generators, and to the classification of the Unit 3 tubesheet material. The specifics of these modifications are discussed further in Section 1.2.a of this report.

In March 2009, after initial fabrication of the Unit 3 steam generators was complete, Mitsubishi performed hydrostatic pressure tests of the primary and secondary sides of the Unit 3 steam generators. After completion of the hydrostatic pressure tests, a visual inspection of the steam generator reactor coolant side revealed cracks in the welds that join the divider plate to the channel head of both steam generators.

From March through July of 2009, Mitsubishi performed a root cause evaluation, which showed that a change in the weld preparation process for the divider plate-to-channel head weld had resulted in the cracking of the weld. A repair procedure was developed and repair work on the Unit 3 steam generators began in June 2009. The repairs to the Unit 3 steam generators were completed in late March (3E0-89) and early April (3E0-88) of 2010. In late April 2010, the Unit 3 steam generators passed the primary hydrostatic pressure re-tests. In June 2010, AREVA performed a final eddy current pre-service examination of the steam generators at the Mitsubishi facilities in Japan, and this was used as the baseline pre-service examination for the Unit 3 steam generators. The steam generators were shipped from the Mitsubishi facilities in Japan in early August 2010, and arrived at SONGS in early October 2010.

The Unit 3 steam generators were installed during a refueling outage, between October 2010 and February 2011. On February 18, 2011, Unit 3 returned to power operations. Engineering inspectors performed inspections in accordance with procedures IP 50001, Steam Generator Replacement Inspection and IP 71111.17, Evaluations of Changes, Tests, or Experiments and Permanent Plant Modifications. The results of the inspections of the replacement steam generators for Unit 3 are documented in NRC Inspection Report 05000362/2010009.

Unit 2 was shut down for a scheduled refueling outage on January 10, 2012. Steam generator tubing inspections in steam generator 2E0-89 found unexpected wear caused

by retainer bars on two tubes that required plugging in accordance with the technical specifications. Steam generator tubing inspections in steam generator 2E0-88 found wear on four tubes that required plugging in accordance with the technical specifications. Anti-vibration bars caused the wear on two of the tubes and retainer bars caused the wear on the other two tubes. Because of the unexpected wear, the licensee preventatively plugged 94 tubes in steam generator 2E0-89 and 98 tubes in steam generator 2E0-88. Fifteen of the tubes in steam generator 2E0-89 were stabilized prior to plugging, and 18 of the tubes in steam generator 2E0-88 were stabilized prior to plugging. Additional details of the inspections of the Unit 2 steam generators are provided in section 1.4 of this report

On January 31, 2012, Unit 3 control room operators received an alarm that indicated a primary-to-secondary reactor coolant leak from steam generator 3E0-88. The alarm received was from the main condenser air ejector radiation monitors, which continuously samples from a vent line for the purpose of rapidly identifying steam generator tube leaks. Although the leak rate was small, it increased enough in a short period of time for the licensee to perform a rapid shutdown. The estimated leak rate was 75 gallons per day. The facility license allows full power operation with a steady state leak rate of less than 150 gallons per day. On February 2, 2012, Unit 3 reached cold shutdown conditions. The licensee reviewed the amount of gaseous radioactivity released and estimated a dose of approximately 0.0000452 mrem to a member of the public. The annual regulatory limit to a member of the public is 100 mrem per year. This unplanned offsite release of radioactivity was reviewed by Region IV health physicist inspectors who confirmed SONGS' offsite dose estimate (see Section 10 for additional details).

After shutdown, the licensee started preparations for performing inspections of Unit 3 steam generators 3E0-89 and 3E0-88. The steam generator tube inspections commenced on February 12, 2012, and confirmed the location of the leak in steam generator 3E0-88 as coming from the tube in Row 106 Column 78. No other tubes were found to be leaking. The licensee then performed eddy current inspections of 100 percent of the tubes in both Unit 3 steam generators. During these inspections, the licensee discovered unexpected wear in both steam generators, including wear at retainer bars (similar to the wear found in Unit 2 steam generators) and significant tube-to-tube wear in the freespan areas (u-bend area of the tubes). The inspections identified 56 tubes in steam generator 3E0-89 and 73 tubes in steam generator 3E0-88 that SCE performed in-situ pressure testing on to determine if they met the structural integrity requirements in plant technical specifications. Additional details of the inspections of the Unit 3 steam generators are provided in section 1.5 of this report

From March 13 – 21, 2012, AREVA conducted in-situ pressure testing of the suspect tubes in both steam generators. There were a total of eight tube failures during testing, all in steam generator 3E0-88. These tubes failed to satisfy the tube integrity performance criteria in the technical specifications. Additional details of the in-situ pressure tests are provided in Section 1.6 of this report.

From March 19 – 29, 2012, the NRC augmented inspection team performed inspections onsite at SONGS.

On March 27, 2012, the NRC issued a Confirmatory Action Letter to SCE, which outlined specific actions for each unit that the licensee must complete before restarting Unit 2 and Unit 3.

A more detailed sequence of events can be found in Attachment 2.

1.2 System Descriptions

a. Replacement Steam Generators

The Unit 2 and Unit 3 replacement steam generators contain thermally treated Alloy 690 tubing in a u-bend configuration, with a nominal outside diameter of 0.750 inches and a nominal wall thickness of 0.043 inches. There are 9727 tubes within each steam generator, which are arranged in 142 rows and 177 columns. The rows and columns are arranged in a nominal 1.000 inch triangular pitch (results in approximately 0.25 inches of clearance between tubes). The first thirteen rows of tubes were thermally stress relieved after bending to reduce susceptibility to stress corrosion cracking. The tubes were hydraulically expanded to the full depth of the tubesheet, which has a nominal thickness of 28.19 inches. Seven tube support plates made of Type 405 stainless steel provide lateral support the tubes. The tube support plates contain broached trefoil holes with chamfered lands. Support of the tubes in the upper bundle is provided by six sets of Type 405 stainless steel, V-shaped, anti-vibration bars.

The original Model 3410 steam generators at Unit 2 and Unit 3 were manufactured by Combustion Engineering. Each steam generator had 9,350 mill-annealed, Alloy 600 tubes, which were a combination of u-bend tubes and tubes with two 90 degree bends (also called square bends). The tubes had a nominal outside diameter of 0.750 inches, and a nominal wall thickness of 0.048 inches. The tubes were expanded through the full depth of the tubesheet using an explosive process, and lateral support was provided by a number of lattice-grid (i.e., eggcrate) carbon steel tube supports. Tube support in the upper bundle was provided by carbon steel diagonal bars (commonly called batwings) and vertical straps. The original steam generators contained a cylindrically shaped support structure beneath the center of the tubesheet (called the stay cylinder) that provided structural support to the large diameter tubesheet.

Southern California Edison reviewed Information Notices, Generic Letters, Bulletins, and industry operational experience associated with steam generator issues when developing the design specifications for the replacement steam generators. Some of the changes are summarized below, for additional information see Section 6 of this report.

The design changes between the original and replacement steam generators noted above are commonly used in replacement steam generators today. The thermally treated Alloy 690 tubing provides increased resistance to stress corrosion cracking as compared to thermally treated Alloy 600 tubing. The use of type 405 stainless steel (in lieu of carbon steel) for tube support plates eliminates the denting phenomenon associated with drilled carbon steel support plates. The use of broached trefoil holes (instead of drilled holes) in tube support plates reduces the number of contact points with tubes and increases flow area between the tube and tube support plate, thereby reducing the potential for corrosion products to buildup between the tube and the tube

support plate. Combustion Engineering steam generators with the batwing design have typically suffered from wear on tubes (from the batwings) in the central stay cylinder region, due to higher cross flow velocities in this portion of the steam generators. In an effort to eliminate this high flow region, the replacement steam generators were designed with a thicker tubesheet that was inherently more rigid, and thus did not require the central stay cylinder. By choosing a design with all u-bend tubes, the bat wing design was eliminated and a new anti-vibration bar assembly was used. The new anti-vibration bar assembly is a free floating design that is supported by the tube bundle and is not attached to the tube bundle wrapper.

b. Channel Head-to-Divider Plate Weld

On March 18, 2009, after completion of the primary and secondary side hydrostatic pressure tests, a crack in the weld between the divider plate and the channel head on Unit 3 steam generator 3E0-88 was identified . Examination showed that the dissimilar metal weld, between the Alloy 690 divider plate and the low alloy steel channel head, had separated. Specifically, the failure occurred between the channel head and the Alloy 152 butter weld, which is the weld filler wire equivalent of Alloy 690. Upon examination, a similar weld failure was found in steam generator 3E0-89 although the size of the failure was not as large.

Mitsubishi performed a root cause evaluation and found that air carbon-arc gouging was used to remove the stainless steel cladding from the channel head, in preparation for making the divider plate-to-channel head dissimilar metal weld. The air carbon-arc gouging had resulted in carbon deposits in the channel head that were not completely removed by grinding that was performed after the gouging operation. The high carbon area increased the hardness of the channel head (due to carburization) and was the most probable cause of the failure between the channel head and the Alloy 152 butter weld. Mitsubishi also found that it was possible, but less probable, that the increased hardness of the channel head promoted hydrogen induced cracking in areas of the divider plate-to-channel head weld that had higher local stresses due to geometric configurations (i.e., at the corner of the divider plate).

1.3 Resident Inspectors' Assessment of Steam Generator Tube Leak Event Response

a. Inspection Scope

On January 31, 2012, the resident inspectors were on-site during the Unit 3 steam generator tube leak event. The resident inspectors observed the licensee's response to the steam generator tube leak from the control room; and observed the rapid shutdown, actions to cool the plant down, actions performed during recovery of plant systems, and other operator actions. Additionally, the resident inspectors conducted a review of control room activities and equipment response to determine if the operating crew responded appropriately and if the plant systems responded as expected during the event. The resident inspectors conducted interviews with various on-shift personnel and reviewed the post trip report, which included control room logs, operator statements, and plant data trends to assess overall performance of the crew. The review also included procedure use and adequacy of the guidance used for event response, placing the plant in a safe and stable condition, establishing appropriate parameter limits for plant

cooldown, and conducting the cooldown to cold shutdown conditions. With respect to operator awareness and decision making, the resident inspectors were specifically focused on the effectiveness of control board monitoring, technical decision making, and work practices of the operating crew. With respect to command and control, the resident inspectors focused on actions taken by the control room supervision in managing the operating crew's response to the event.

b. Observations and Findings

No findings were identified.

The team identified one unresolved item for which additional information is required to determine if performance deficiencies exist or if the issue constitutes a violation of NRC requirements.

On January 31, 2012, at 3:05 p.m. (PST), main control room operators at Unit 3 received a secondary plant system radiation alarm associated with the air ejectors followed by a blowdown radiation monitor alarm. Operations personnel responded in accordance with Abnormal Operating Instruction SO23-13-14, "Reactor Coolant Leak," Revision 16, since the entry conditions for a steam generator tube leak were satisfied. Operations personnel determined the leakage to be about 75 gallons per day, using a mass balance calculation (.06 gpm), from steam generator 3E0-88. This leak rate was below the Technical Specification 3.4.13, "RCS Operational Leakage," limit of 150 gallons per day for primary- to-secondary leakage through any one steam generator.

At 4:10 p.m., operations personnel evaluated that the primary-to-secondary leak rate exceeded 75 gallons per day on steam generator 3E0-88 and that the leak was increasing at greater than 30 gallons per day per hour, and consequently, initiated a rapid power reduction to be ≤ 50 percent power in one hour and in Mode 3 within the next two hours per Abnormal Operating Instruction SO23-13-14. In accordance with Abnormal Operating Instruction SO23-13-14, when reactor power was less than 35 percent, operations personnel tripped the reactor at 5:31 p.m. to enter Mode 3.

Due to the manual reactor trip, operations personnel entered Emergency Operating Instruction SO23-12-1, "Standard Post Trip Actions," Revision 26, to ensure the plant was placed in a stable, safe condition, and that the plant was configured to respond to the continuing steam generator tube leak event. Operations personnel implemented the emergency operating instructions and isolated the affected steam generator at 6:00 p.m. A plant cooldown was conducted by using main steam bypass from steam generator 3E0-89 to the main condenser. Mode 4 conditions were achieved at approximately 6 hours after isolation of the steam generator. Cooldown continued until Unit 3 was in Mode 5, cold shutdown.

The resident inspectors concluded that abnormal and emergency operating instructions were performed consistent with expected standards and that operations personnel exhibited the fundamental operator competencies in response to the Unit 3 steam generator tube leak event.

Specifically, the resident inspectors determined that the operating crew displayed a questioning attitude of changing plant parameters and took conservative actions. The operating crew identified important preliminary increasing trends of Unit 3 air ejectors radiation monitors and subsequent alarms in a timely manner for a tube leak in steam generator 3E0-88. Additionally, the resident inspectors determined that crew supervision exercised effective oversight of plant status, crew performance, and control room command and control.

(1) Introduction: The team identified an unresolved item associated with Operations Procedure SO123-0-A8, "Trip/Transient and Event Review," that required a formal review of operator actions and safety systems to determine if important systems responded as design. The formal review was not completed.

Description: On March 19, 2012, the team requested to review the results of operations post trip/transient evaluation of the January 31, Unit 3 tube leak event. Operations Procedure SO123-0-A8, "Trip/Transient and Event Review," Revision 8, required a detailed post trip review following unplanned reactor trips. However, a formal trip/transient and event review was not available because operations personnel determined the Unit 3 event was planned and therefore a formal review was not required.

On March 27, 2012, Team met with operations personnel to discuss items on a draft Unit 3 trip/transient evaluation provided to the team. The team also discussed with operations personnel the requirements in Operations Procedure SO123-0-A8, and concluded a basis for what was "planned" and "unplanned" was not defined. Operations personnel determined the Unit 3 reactor trip was a planned reactor trip because Abnormal Operating Instruction SO23-13-14, "Reactor Coolant Leak," Revision 16, Section 4, had described actions for primary-to-secondary leakage. Specifically, this section stated, in part, under plant conditions of increasing steam generator tube leakage, operations personnel were required to perform a rapid power reduction to less than 35 percent power, then trip the reactor.

The team discussed with operations personnel that definitions for unplanned events have been established through industry standards to report on plant performance. These standards include NEI 99-02, "Regulatory Assessment Performance Indicator Guideline," Revision 6. Industry Guidance NEI 99-02 indicated that Unit 3 reactor trip should be considered unplanned since the reactor trip was required by an abnormal operating instruction and would count against the performance indicator for unplanned reactor trips. NRC Regulatory Issue Summary (RIS) 2000-08, "Voluntary Submission of Performance Indicator Data," Revision 1, allows industry to use NEI 99-02 to report performance indicator data.

Additional review and follow up will be required to review the corrective actions associated with the procedural guidance for an event review and then determine whether this issue represents a performance deficiency or constitutes a violation of NRC requirements. This issue is identified as URI 05000362/2012007-01, "Adequacy of the Trip/Transient and Event Review Procedure"

1.4 Description of Steam Generator Inspections at SONGS Unit 2

On January 10, 2012, SONGS Unit 2 was shutdown for a refueling outage. Southern California Edison personnel conducted a scheduled steam generator inspection in accordance with Technical Specification 6.6.9, "Steam Generator (SG) Program." This was the first inspection of the Unit 2 steam generators since their replacement in January 2010. The accumulated operating time on the replacement Unit 2 steam generators was 1.7 effective full power years. There was no reported primary to secondary leakage at the time of shutdown.

The scope of the inspection included a 100 percent tube sample with an eddy current test bobbin probe over the full tube length, followup rotating coil inspections at special interest locations, and a secondary side foreign object search and retrieval. Three types of flaw indications were found in the tubes:

- Wear at the tube support plate and anti-vibration bar supports
- Wear caused by a loose part
- Wear at retainer bars

With the exception of the wear indications found at tube retainer bar locations, the wear indications found are similar to those found at other replacement steam generators after one cycle of operation. A total of 2411 tubes were found with indications at the tube support plates and anti-vibration bar supports, the vast majority of which had a measured depth of less than 20 percent of the tube wall thickness. Only two of these indications, located at the anti-vibration bar supports, exceeded the Technical Specification 6.6.9.c repair limit of 35 percent of the tube wall thickness. The two affected tubes plus two additional tubes with 31 percent deep indications were stabilized and plugged.

Southern California Edison performed a reanalysis of the bobbin probe eddy current data collected during the Unit 2 inspection program. This reanalysis was performed after the finding of the long free-span indications in Unit 3, allowing insights gained during the Unit 3 inspections to be applied to the Unit 2 data. The scope of this reanalysis was a "box" of 1000 tubes in each Unit 2 steam generator which bounded the region of tubing affected by the instability damage in Unit 3. This reanalysis confirmed the results of the original analysis and did not identify any tube-to-tube wear.

Two tubes were found with indications (less than 35 percent through wall) caused by a small loose part on the secondary side. This loose part was removed from the steam generator. Metallurgical analysis indicated the loose part was a piece of weld metal, most likely introduced during steam generator manufacturing operations. The two affected tubes were left in service.

Six tubes were found with indications at retainer bar intersections. The retainer bars are part of the support structure for the anti-vibration bars and are a unique feature of steam generators manufactured by Mitsubishi. The measured indication depths ranged from 28 to 90 percent of the tube wall thickness. Because of the short measured lengths of these flaws, only the 90 percent indication was in-situ pressure tested as part of condition monitoring. The affected tube was successfully pressurized to 5300 psi with no leakage, confirming that the Technical Specification 6.6.9.b tube integrity

performance criteria were met. Mitsubishi attributed the cause of these indications to retainer bar vibration, the potential for which had not been evaluated during design (see Section 4 for additional details). Fort Calhoun is the only other domestic plant with Mitsubishi steam generators. The retainer bars at Fort Calhoun are significantly stiffer than at SONGS.

The six tubes with retainer bar indications have been plugged and stabilized. In addition, the remaining 182 tubes (total for both Unit 2 steam generators) that intersect the retainer bars were plugged as a preventive measure. Twenty four of these tubes were stabilized prior to plugging to ensure that all 188 plugged tubes will not sever due to continued vibration of the retainer bar. The tubes that were stabilized are strategically located at each end and center of the retainer bars.

Detailed plans for returning Unit 2 to service are still under development. Short-term plans relating to Unit 2 included conducting a full u-bend examination of 1375 tubes in both steam generators using a rotating coil. The tube sample was intended to totally box-in the region affected by free-span wear seen in Unit 3 by significant margin. The rotating coil provides a slightly more sensitive inspection for long free-span wear scars than the bobbin probe. These inspections were performed subsequent to the team's site visit and identified two tubes in Unit 2 steam generator 2E0-89 with shallow free-span wear in the u-bend region. These indications both measured approximately 14 percent deep, and were located in the same region of the bundle affected by free-span indications in the Unit 3 steam generators.

The tube wear data for Unit 2 is shown below.

**Wear Depths Summary**

| Steam Generator SG2E88 | Anti-Vibration Bar | Tube Support Plate | U-Bend Freespan | Retainer Bar | Foreign Object | Total |
|---|---|---|---|---|---|---|
| TW* ≥ 50% | 0 | 0 | 0 | 1 | 0 | 1 |
| 35 - 49% | 2 | 0 | 0 | 1 | 0 | 3 |
| 20 - 34% | 86 | 0 | 0 | 0 | 2 | 88 |
| 10 - 19% | 705 | 108 | 0 | 0 | 0 | 813 |
| TW < 10% | 964 | 117 | 0 | 0 | 0 | 1081 |
| TOTAL | 1757 | 225 | 0 | 2 | 2 | **1986** |

*Through Wall

| Steam Generator SG2E89 | Anti-Vibration Bar | Tube Support Plate | U-Bend Freespan | Retainer Bar | Foreign Object | Total |
|---|---|---|---|---|---|---|
| TW ≥ 50% | 0 | 0 | 0 | 1 | 0 | 1 |
| 35 - 49% | 0 | 0 | 0 | 1 | 0 | 1 |
| 20 - 34% | 78 | 1 | 0 | 3 | 0 | 82 |

| | | | | | | |
|---|---|---|---|---|---|---|
| 10 - 19% | 1014 | 85 | 2 | 0 | 0 | 1101 |
| TW < 10% | 1499 | 53 | 0 | 0 | 0 | 1552 |
| TOTAL | 2591 | 139 | 2 | 5 | 0 | **2737** |

1.5 Description of Steam Generator Inspections at SONGS Unit 3

After shutdown, the licensee started preparations for performing inspections of Unit 3 steam generators 3E0-89 and 3E0-88. The steam generator tube inspections commenced on February 12, 2012, and confirmed the location of the leak in steam generator 3E0-88 as coming from the tube in Row 106 Column 78. The leak was located 2 inches beyond anti-vibration support number 4 on the hot leg side. It was found to be associated with a long (approximately 30 inches) free-span flaw indication. No other tubes were found to be leaking.

The licensee then performed eddy current inspections of 100 percent of the tubes, full length, in both Unit 3 steam generators with a bobbin probe. The bobbin probe examinations were supplemented by rotating coil examinations to confirm, characterize, and size the indications found by the bobbin probe. These examinations identified over 160 tubes in each steam generator with long free-span indications similar to that found on the leaking tube. In each steam generator, the tubes containing the free-span indications were grouped together in a tightly packed zone near the center of the tube bundle. The free-span indications were located on the upper and/or lower sides (i.e., the extrados and intrados) of the u-bend. Thus, a given free-span indication on the extrados of one tube tended to be matched by a similar indication on the intrados of the adjacent higher row tube located in the same tube column. This pattern provided early evidence to SCE personnel that the free-span indications were wear flaws due to tube-to-tube contact from motion of the u-bends within the plane of the u-bends. More than half of the free-span indications in each steam generator had maximum measured depths exceeding the 35 percent plugging limit in the technical specifications, and ranged to as much as 99 percent (for the non-leaking tubes).

Over 460 tubes in each steam generator were found with wear indications at the tube support plates. In general, tubes exhibiting the free-span wear indications tended to exhibit tube support plate indications with the highest depth measurements, typically with the deepest values at the seventh tube support plate and trending down at successively lower support levels. Approximately 170 tubes in each steam generator exhibited indications at the tube support plates that exceeded the 35 percent plugging limit, with maximum depths ranging to 70 percent.

Approximately 800 tubes in steam generator 3E0-88 and 900 tubes in steam generator 3E0-89 exhibited wear indications at the anti-vibration bar supports. Most of these measured less than 20 percent deep, and only 2 indications exceeded the 35 percent plugging limit. For tube indications at anti-vibration bars in tubes not exhibiting free-span u-bend indications, the length of the wear indications was confined to within the width of the anti-vibration bars. This was also true in SONGS Unit 2. For tubes that exhibited free-span indications, many of these tubes had wear indications at the anti-vibration bars that extended outside the width of the anti-vibration bars which indicated in-plane movement of these tubes in the u-bend area.

Four tubes were found with indications at retainer bar intersections, with measured depths ranging from 28 to 46 percent. At the time of the team's presence at the site, planned corrective actions with respect to tubes adjacent to the retainer bar were similar to those completed for Unit 2. The four tubes with retainer bar indications were plugged and stabilized. In addition, the remaining 184 tubes (total for both Unit 3 steam generators) that intersect the retainer bars were plugged as a preventive measure. Twenty four of these tubes were stabilized prior. The tubes that were stabilized are strategically located at each end and center of the retainer bars.

Tube wear data for Unit 3 is shown below.

**Wear Depths Summary**

| Steam Generator SG3E88 | Anti-Vibration Bar | Tube Support Plate | Tube-to-Tube Wear | Retainer Bar | Foreign Object | Total |
|---|---|---|---|---|---|---|
| TW ≥ 50% | 0 | 117 | 48 | 0 | 0 | 165 |
| 35 - 49% | 3 | 217 | 116 | 2 | 0 | 338 |
| 20 - 34% | 156 | 506 | 134 | 1 | 0 | 797 |
| 10 - 19% | 1380 | 542 | 98 | 0 | 0 | 2020 |
| TW < 10% | 1818 | 55 | 11 | 0 | 0 | 1884 |
| TOTAL | 3357 | 1437 | 407 | 3 | 0 | **5204** |

| Steam Generator SG3E89 | Anti-Vibration Bar | Tube Support Plate | Tube-to-Tube Wear | Retainer Bar | Foreign Object | Total |
|---|---|---|---|---|---|---|
| TW ≥ 50% | 0 | 91 | 26 | 0 | 0 | 117 |
| 35 - 49% | 0 | 252 | 102 | 1 | 0 | 355 |
| 20 - 34% | 45 | 487 | 215 | 0 | 0 | 747 |
| 10 - 19% | 940 | 590 | 72 | 0 | 0 | 1602 |
| TW < 10% | 2164 | 94 | 1 | 0 | 0 | 2259 |
| TOTAL | 3149 | 1514 | 416 | 1 | 0 | **5080** |

Detailed plans for satisfying the provisions of the NRC March 27, 2012, Confirmatory Action Letter for SONGS Unit 3 were not available and were still being developed.

1.6 In-Situ Pressure Testing

Technical Specification 5.5.9.a for SONGS Units 2 and 3 requires that a condition monitoring assessment be performed during each outage that the steam generator tubes are inspected or plugged to confirm that the tube integrity performance criteria are being met. These performance criteria include standard criteria for structural integrity and accident leakage integrity. The limiting structural criterion applicable to the SONGS

Units 2 and 3 is the normal steady state pressure differential across the tubes times a safety factor of three. The limiting accident leakage criterion is 0.5 gallons per minute under main steam line break conditions.

Typically, the requirement for performing condition monitoring is satisfied by analyzing eddy current flaw indications relative to screening criteria that are functions of measured flaw depth, length, and/or eddy current voltage response. These screening criteria are conservative relative to the performance criteria since they make allowance for eddy current measurement error, uncertainties with respect to voltage correlations with flaw depth and burst strength, and material property variability. When these screening criteria are exceeded, in-situ pressure tests may be performed for tubes not meeting the screening criteria to confirm that the performance criteria are met for these tubes. In-situ pressure test procedures at SONGS and the screening criteria for selecting tubes to be tested were in accordance with Electrical Power Research Institute Report 1014983, "Steam Generator In-Situ Pressure Test Guidelines," Revision 3.

At Unit 2, one tube with a measured 90 percent deep indication at a retainer bar location was determined to be outside the screening criteria and was in-situ pressure tested. For Unit 3, an optional strategy to the screening criteria approach was taken in accordance with the Steam Generator In-Situ Pressure Test Guidelines, Appendix A. The Appendix A approach is a statistically based Monte Carlo approach that samples the uncertainty distributions associated with each of the input parameters for calculating tube burst pressure. This methodology selects all tubes determined to have a 0.95 probability or less of meeting the limiting structural integrity performance criterion. Application of this methodology led to selection of 129 tubes on Unit 3 for in-situ pressure testing, 73 tubes in steam generator 3E0-88 and 56 tubes in steam generator 3E0-89.

The in-situ pressure tests were performed under ambient conditions. Therefore the test pressures were adjusted upward from actual values under hot conditions to account for the increased yield and ultimate strength of the tube material under ambient conditions. The test pressures (with correction factors added) corresponding to normal operating conditions, main steam line break, and three times normal operating pressure differential were 1850 psi, 3200 psi, and 5300 psi, respectively.

The test procedure involved pressurizing the subject tube at a rate not to exceed 200 psi/sec to each test point. At each test point, pressure was held constant for two minutes if the tube was not leaking. If the tube was leaking, pressure was held constant for five minutes before ramping to the next test pressure.

The tube with a 90 percent deep retainer bar indication in Unit 2 was successfully tested to 5300 psi with no leakage. This demonstrated that all performance criteria were met for this tube. For Unit 3, 136 of the 144 tubes were successfully tested to 5300 psi with no leakage, demonstrating that these tubes met the performance criteria. The remaining eight tubes "failed" prior to reaching 5300 psi. Failure in this context means that leakage occurred in excess of the 4.5 gallons per minute pump capacity during the test, and test pressure could not be maintained. All eight tubes that failed were in steam generator 3E0-88. All tubes tested in steam generator 3E0-89 passed with no leakage.

Table 1 summarizes the in-situ pressure test results for the eight tubes that failed the test. Three of the eight tubes failed at or below the test pressure corresponding to main steam line break differential pressure. The tube that leaked causing shutdown of SONGS Unit 3 (row 106, column 78) exhibited the lowest failure pressure, 2874 psi. The three tubes that failed at or below main steam line break pressure failed to meet the accident leakage performance criteria as well as the structural integrity performance criteria. The other five tubes met the accident leakage criteria, but failed to meet the structural criteria.

Prior to being tested to failure, the tube that leaked during operation (row 106, column 78) exhibited a measured leak rate of 0.072 gallons per minute at a test pressure corresponding to normal operating conditions. This compares with a leak rate of 0.06 gallons per minute measured by SCE operating staff for SONGS Unit 3 when they made the decision to shut the plant down. The reported operational leakage was evaluated based on ambient conditions. Both the operational and test measurements are less than the applicable technical specification limit of 0.1 gallons per minute.

Table 1 – SONGS 3 In-Situ Pressure Test Results

| SG | Row | Column | Leak Rate at Normal Operating Conditions (gpm) | Leak Rate at Main Steam Line Break (gpm) | Failure Pressure (psi) |
|---|---|---|---|---|---|
| 88 | 106 | 78 | 0.072 | >0.5 | 2874 |
| 88 | 102 | 78 | 0 | >0.5 | 3268 |
| 88 | 104 | 78 | 0 | >0.5 | 3180 |
| 88 | 100 | 80 | 0 | >0.5 | 4732 |
| 88 | 107 | 87 | 0 | >0.5 | 5160 |
| 88 | 101 | 81 | 0 | >0.5 | 4889 |
| 88 | 98 | 80 | 0 | >0.5 | 4886 |
| 88 | 99 | 81 | 0 | >0.5 | 5026 |

## 2.0 Probable Cause Evaluation (Charter Item 2)

While the team was on-site, both SCE and Mitsubishi were in the process of conducting cause evaluations for the tube failure and unexpected wear of steam generator tubes in Unit 3. As part of both evaluations, actions were being taken to understand the

differences between Unit 2 and 3 steam generators. The cause evaluations were not complete and were undergoing changes while the Augmented Inspection Team was onsite; however, SCE did subsequently complete their cause evaluation prior to the team's exit meeting. The team did a detailed review of the completed cause evaluation.

2.1 SONGS Cause Evaluation

a. Inspection Scope

The team conducted an overall and independent review of SCE's actions taken to understand the probable cause for the steam generator tube degradation. The team reviewed the updated final safety analysis report, technical specifications, design basis documents, original steam generator design, replacement steam generator design, purchase order specifications, design changes, manufacturing changes, nonconformance reports, supplier deviation reports, and interviewed personnel. The review included understanding the licensee's criteria for determining the cause, or if one could not be determined, the most probable cause. .

b. Observations and Findings

No findings were identified.

The team participated in discussions with the licensee's cause analysis team and noted that the licensee employed various root cause evaluation techniques. These included a change analysis technique that compared design differences and a problem analysis technique relying on a systematic process that looked at the causal effects and risk assessments of possible causes. The team reviewed the licensee causal analysis summary that assigned a ranking of highly probable to unlikely.

In the area of thermal hydraulic analysis the licensee contracted AREVA to verify the accuracy of Mitsubishi's thermal-hydraulic code (FIT III) used during the design of the replacement steam generators, by comparing it to ATHOS, a thermal-hydraulic code developed by the Electric Power Research Institute (EPRI). In addition, SCE contracted Westinghouse to perform a completely independent analysis using a Westinghouse modified ATHOS thermal-hydraulic code. AREVA also performed independent flow induced vibration analyses. The licensee brought on board MPR associates and numerous other technical experts, including a world renowned expert in flow induced vibration, to assist in the cause assessment. The team observed that SCE preliminary causal analysis was generally consistent with that of Mitsubishi. Initially, the licensee reviewed the following cause contributors:

- Departure from original steam generator u-bend/anti-vibration bar configuration - highly probable
- Departure from original steam generator stay cylinder configuration - possible
- Departure from original steam generator tube support plate configuration - possible
- Replacement steam generator anti-vibration bar structure too flexible - possible
- Additional 300 rotations of Unit 3 replacement steam generator due to divider plate repair work - possible

- Thermal-hydraulic and flow induced vibration models used in replacement steam generator design incorrectly predicted replacement steam generator tube bundle behavior – possible

The team observed that the licensee performed a detailed analysis and attempted to address all probable causes. The team observed that some of the conditions which were eliminated as potential contributors may need further evaluation. In particular, the team believed that the only major difference between Units 2 and 3 was the divider plate repair to both Unit 3 steam generators. This difference had been discounted by both SCE and Mitsubishi. The divider plate is further discussed in Section 12.0 of this report.

The completed SCE cause evaluation identified the mechanistic cause of the tube-to-tube wear as fluid-elastic instability caused by a combination of localized high steam/water velocity, high steam void fraction, and insufficient contact forces between the anti-vibration bars and the tubes. The Mitsubishi thermal/hydraulic model under-predicted the actual thermal/hydraulic conditions in the steam generator and improvements in fabrication between Unit 2 and Unit 3 steam generators led to the reduced contact forces.

## 2.2 Mitsubishi Cause Evaluation

### a. Inspection Scope

The team conducted an overall and independent review of Mitsubishi's actions taken to understand the probable cause of the steam generator tube degradation. While onsite, the inspection team was informed that Mitsubishi was performing a failure analysis to characterize the mechanism causing the tube-to-tube wear condition in Unit 3. The team had periodic discussions with Mitsubishi personnel to gather information on the probable causes under consideration. The team reviewed information contained in the updated final safety analysis report, technical specifications, design basis documents, purchase order specifications, design changes, design drawings, manufacturing changes, nonconformance reports, and supplier deviation reports to understand the design and fabrication of the replacement steam generators and independently assess the information obtained from Mitsubishi's in-progress cause evaluation.

### b. Observations and Findings

No findings were identified.

The team determined that Mitsubishi was performing a thorough evaluation of the failure mechanism leading to the tube-to-tube wear in Unit 3. The team noted that Mitsubishi gathered factual information about the design, fabrication, and operation of the replacement steam generators in Unit 2 and Unit 3 to understand the differences between these components and identify potential contributing causes. The team discussed the preliminary failure mechanism theory with Mitsubishi personnel, who attributed the tube-to-tube; wear to a combination of design, fabrication, and operational factors.

Mitsubishi's preliminary explanation of the failure mechanism started with the combination of two factors: (1) a relatively small tube pitch to tube diameter ratio (P/D), and (2) high void fraction in the tube bundle area where the tube-to-tube wear was identified. The small pitch to diameter ratio was a fixed parameter in the replacement steam generators established by the nominal center-to-center distance between adjacent tubes (P) and the nominal outside diameter of the tubes (D). The high void fraction was identified from the results of Mitsubishi's thermal-hydraulic model for the secondary side of the replacement steam generators. Mitsubishi considered that the combination of these two factors may have resulted in favorable conditions for in-plane tube vibration based, in part, on the results of recent studies in fluid-elastic instability.

Additionally, Mitsubishi identified that the Unit 3 replacement steam generators had better dimensional controls during the fabrication process. This determination was based, in part, on the results of pre-service and in-service eddy current examinations, and fabrication data from Unit 2 and Unit 3 replacement steam generators. The correlation of dimensional controls with the failure mechanism was that improved dimensional controls for Unit 3 replacement steam generators resulted in less variability of as-built critical dimensions such as anti-vibration bar thickness, tube roundness, and gaps between tubes and anti-vibration bars. Condition Report 201836127, Cause Evaluation, Revision 0, lists one of the mechanistic causes of the tube-to-tube wear to be associated with the reduction in dimensional variability that resulted in less contact force between the tubes and the anti-vibration bars.

The failure mechanism model also considered a fluid dynamic effect associated with the spreading of the tubes in the U-bend region during normal operating conditions. This effect was informally referred to as "flowering," due to the characteristic shape in which the tube bundle spreads transverse to the plane of the u-bends at normal operating conditions. "Flowering" was described as the elastic deformation of the anti-vibration bar structure and the tube bundle in the U-bend region, as a result of thermal expansion and fluid dynamic pressure acting on the secondary side of the tubes (see figure below). The deformation caused by the "flowering" effect was believed to result in multiple areas of no contact between the anti-vibration bars and the tubes, which minimized resistance to in-plane motion of the u-bend area of the tubes.

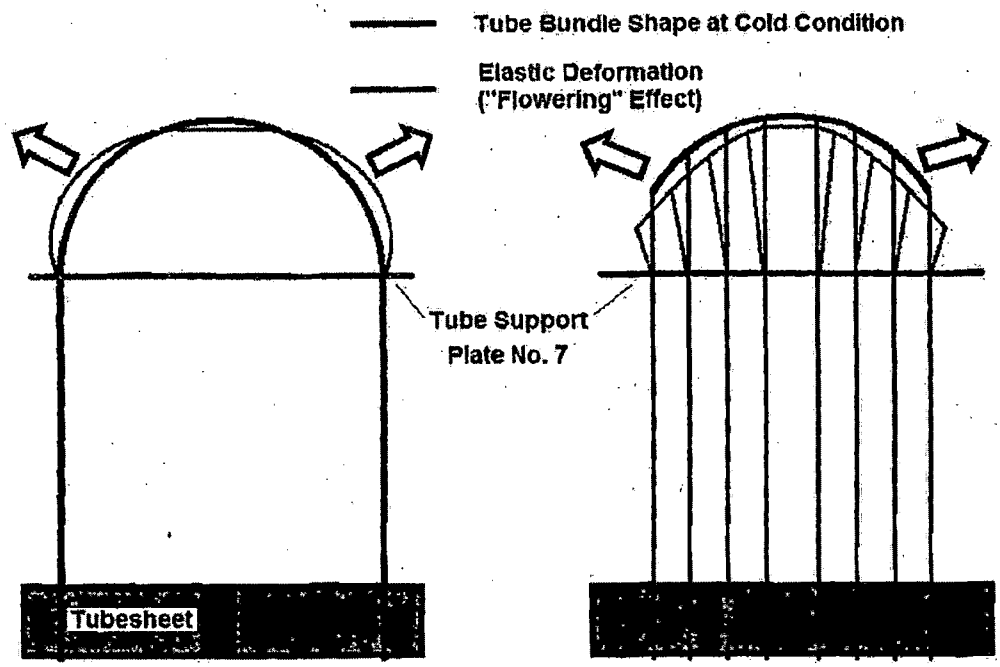


Description of "Flowering" Effect (Conceptual Drawing – For Illustration Purposes Only)

Mitsubishi considered that the collective contribution of the factors described above resulted in conditions in the U-bend that were highly susceptible to excessive tube vibration. The in-plane vibration of the tubes in the U-bend region allowed direct contact between free-span sections of the tubes, resulting in the unanticipated tube-to-tube wear.

At the conclusion of the onsite portion of this inspection, Mitsubishi was further evaluating the failure mechanism by conducting in-depth analyses of available data to validate their failure mechanism theory. One of the analyses included analytical studies of the impact of anti-vibration bar gap size, free-span length, fluid-elastic vibration, and contact forces on tube wear depth. An expected outcome of this analysis was that contact forces and the number of inactive supports should be the biggest contributors to wear under fluid-elastic instability conditions. Additionally, Mitsubishi was conducting further analytical studies of the "flowering" effect by modeling multiple cases of elastic displacement of the tube bundle structure, taking into consideration thermal expansion and dynamic pressures. Concurrent with these analyses, Mitsubishi was studying the effect of manufacturing dispersion on tube wear. Specifically, Mitsubishi was modeling multiple cases of manufacturing variability to study the influence of different dimensional controls on gap and contact forces. Mitsubishi was using as-built data as well as manufacturing tolerances to statistically assess the impact of dimensional controls on the resulting gaps and contact forces in different areas of the tube bundle. One of the expected outcomes of this analysis was that manufacturing variability in Unit 3, in combination with the "flowering" effect, would result in a reduction of contact forces in Unit 3 relative to those in Unit 2. During the on-site portion of this inspection, the results

of these studies were not finalized and additional failure analysis tasks were scheduled to accurately characterize the failure mechanism and support the cause determination.

At the time of the exit, Mitsubishi was still completing their independent cause analysis. As part of the Confirmatory Action Letter inspection, the final Mitsubishi cause evaluation will be reviewed.

3.0 Operational Differences in Configuration and Operation between Unit 2 and 3 (Charter item 3)

a. Inspection Scope

The team reviewed Unit 2 and 3 Cycle 16 operational data records found in operator logs and the plant computer system. The team focused on differences in configuration and operation between Units 2 and 3. The team evaluated full power operational data between Unit 2 and Unit 3 steam generators after each were replaced. From this data the team compared key plant parameters and other indications such as temperature, flow, power, pressure, and vibration and loose parts monitoring alarms. The team reviewed operational differences between Units 2 and 3 in order to gain information and to assess if these differences could have had an impact on the observed differences in the steam generator tube wear between the units.

b. Observations and Findings

No findings were identified.

The team looked at a number of operational differences from the perspective of the thermal-hydraulic disparities. The team also evaluated the significance of these differences insofar as potential impact to tube degradation. It was noted that Unit 3 ran with slightly higher primary temperatures, about 4°F higher than Unit 2. Other differences were noted in steam and feedwater flow but none of the differences were considered sufficient to significantly affect thermal hydraulic characteristics inside the steam generators. In addition, the team also identified that Unit 3 steam generators had numerous valid vibration and loose parts monitoring system alarms compared to Unit 2 steam generators.

(1) Introduction: The team identified an unresolved item associated with the number of valid vibration and loose parts alarms observed in Unit 3 steam generators compared to Unit 2 steam generators, during steady state conditions.

Description: During the review of operational differences between Unit 2 and 3 steam generators the team identified a significant difference in number of valid vibration and loose parts monitoring system alarms. The vibration and loose parts monitoring system was designed to provide continuous monitoring and conditioning of loose parts accelerometer signals. Two separate accelerometers were installed on each of the steam generators. The location of these instruments are on the steam generators' lower supporting structures and provide acoustic information about loose parts impacts specifically on the reactor coolant or primary side of the steam generators. The vibration and loose parts monitoring system real time

functions consist mainly of impact alarm validation of suspected loose part events and recording acoustic data. Long term vibration monitoring and loose part event trending were done by engineering personnel using recorded data.

Unit 3 returned to service in February 2011, and the resident inspectors noted a number of nuclear notifications associated with Unit 3 steam generators vibration and loose parts monitoring alarms. On January 20, 2012, prior to the Unit 3 tube leak, engineering personnel also identified this trend and documented in Nuclear Notification NN 201818719 this problem and assigned an action to do further evaluation. On February 3, 2012, engineering personnel sent two sets of alarm signatures to Westinghouse, which contained impact data on alarms for time periods of steady state operation (i.e., no major temperature changes). Westinghouse engineering personnel concluded that the acoustic signals picked up by the accelerometers were valid and similar in nature to acoustic signatures caused by thermal movement of a steam generator expected during changes in thermal conditions, such as plant startup or shutdown. However the data obtained and analyzed had been taken during steady state operations. The team noted that Unit 2 steam generators did not receive the same number and type of alarms during a similar period of steady state operations. Engineering personnel also compared hot leg temperature changes linked to Unit 3 operations from February 18, 2011, to January 31, 2012, and confirmed about 30 valid alarms during this period were not associated with thermal transients.

Additional review and follow up will be required of the vibration and loose parts monitoring system alarms, including evaluation and disposition of Unit 3 alarms and then determine whether this issue represents a performance deficiency or constitutes a violation of NRC requirements. This issue is identified as URI 05000362/2012007-02, "Evaluation of Unit 3 Vibration and Loose Parts Monitoring System Alarms."

(2) Introduction: The team performed a number of different thermal-hydraulic analysis of Units 2 and 3 steam generators. The output of the various analyses runs where then compared and reviewed to determine if those differences could have contributed to the significant change in steam generator tube wear.

Description: The NRC conducted a number of different thermal-hydraulic analyses, including:

- Lower bounding thermal hydraulic analysis using the steam generator base design condition, where primary inlet temperature was 598°F, and an upper bound case where primary inlet temperature was 611°F as identified in Mitsubishi Document L5-04GA021, Revision 3
- Varying steam generator pressures from 833 to 942 psia
- Steam mass flow rates from 7.59 to 7.62 Mlbm/hr
- Primary loop volumetric flow rate from 102,000 to 104,000 gpm, and
- Recirculation ratio from 3.2 to 3.5.

The result of the independent NRC thermal-hydraulic analysis concluded that differences in the actual operation between units and/or individual steam generators

had an insignificant impact on the results and in fact, the team did not identify any changes in steam velocities or void fractions that could attribute to the differences in tube wear between the units or steam generators. It should be noted that increases in primary temperature and steam generator pressures has the effect of reducing void fractions and peak steam velocities, which slightly decreases the conditions necessary for fluid elastic instability and fluid-induced vibration.

4.0 Design and Manufacturing Differences (Charter Item #4) (Mitsubishi Charter Item 1)

During the development of the charter, it was not known how SCE and Mitsubishi reviewed and approved design and manufacturing changes. During the inspection, it was identified that all design and manufacturing changes proposed by Mitsubishi required review and approval from a SCE representative. Based on this, it was determined that this area could be covered as one item.

a. Inspection Scope

The team interviewed licensee and Mitsubishi personnel involved in the design and fabrication of the replacement steam generators and reviewed information including nonconformance reports, design drawings, fabrication procedures, design changes, engineering evaluations, supplier deviation requests, and design specifications to identify conditions affecting quality that resulted in relevant design differences between the replacement steam generators. The team assessed whether these differences could be considered as contributing factors for the cause of the tube-to-tube wear issue in Unit 3. The team also reviewed Engineering Change Packages 800071702 and 800071703 for the Unit 2 and Unit 3 replacement steam generators, respectively, with emphasis on changes made to the design methodology described in the updated final safety analysis report for the original steam generators to verify that the evaluation was performed in accordance with licensee procedures and the provisions of 10CFR 50.59, "Changes, Tests, and Experiments."

b. Observations and Findings

No findings were identified.

The team identified two unresolved items for which additional information is required to determine if performance deficiencies exist or if the issues constitute violations of NRC requirements. The team also identified several observations related to the design, fabrication, and the engineering change package for the Unit 2 and Unit 3 replacement steam generators.

1) Introduction: The team identified an unresolved item associated with the design of the retainer bars in Unit 2 and Unit 3 replacement steam generators.

Description: In February 2012, the licensee identified wear indications in Unit 2 replacement steam generators at the tube locations in contact with the retainer bars (see figure below). Some of the indications showed excessive wear with a maximum degradation of 90 percent through wall.

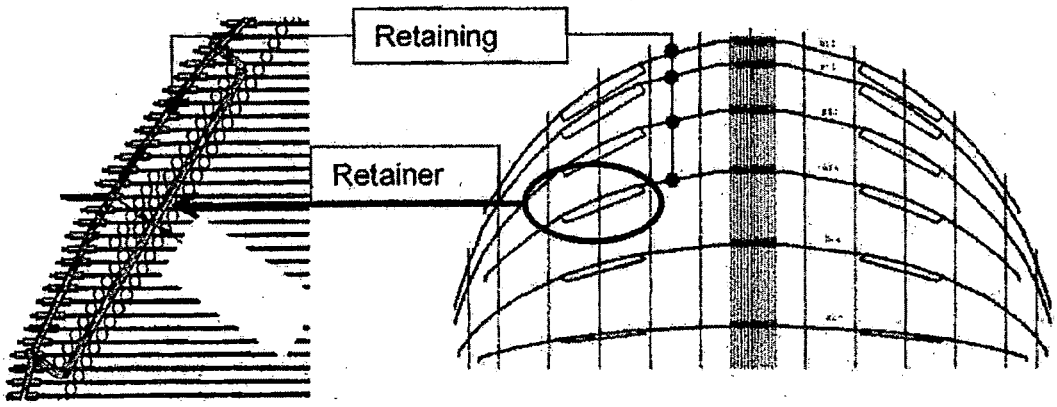


**Retainer Bar Design and Location of Affected Tubes (For Illustration Purposes Only)**

The team identified that the design of the replacement steam generators did not expect any potential vibration concerns in the area of the tube bundle where the retainer bars were located. The basis for Mitsubishi's design philosophy relied on the following factors:

- Based on the calculated natural frequency of the retainer bar, Mitsubishi considered that there would not be a resonant vibration condition relative to the flow conditions in the location of retainer bars.
- The vibration analysis of the tube bundle only considered out-of-plane vibration because in-plane vibration was not expected to be an operational concern for the retainer bars.
- The outermost tubes were considered the least susceptible to flow-elastic instability; therefore retainer bar locations were not included in the vibration analysis.
- Fluid-elastic instability was found not applicable to the retainer bar because this mechanism did not apply to a single tube in cross flow.
- Vortex-induced vibration was found not applicable to the retainer bar because it was considered a vibration mode applicable to a single cylinder in uniform cross flow in a large area and the flow condition around the retainer bars was considered slug-froth two phase flow.

However, upon identification of retainer bar-to-tube wear in Unit 2 replacement steam generators, Mitsubishi performed an evaluation to identify the cause of excessive wear. The analysis considered three vibration mechanisms: fluid-elastic instability, vortex-induced vibration, and turbulence-induced vibration (random vibration). The analysis for turbulence-induced vibration determined that random vibration was the possible cause of the retainer vibration, based on the peculiar flow around the retainer bar, combined with the rather low natural frequency of the retainer bar. The analysis used the two phase flow conditions around the retainer bars and identified various modes of vibration at those flow conditions that could lead to retainer bar vibration and consequently to tube wear.

Additional review by the NRC is required following completion of the licensee's cause evaluation to determine whether this issue represents a performance deficiency or constitutes a violation of NRC requirements. This issue is identified as URI 05000362/2012007-03, "Evaluation of Retainer Bars Vibration during the Original Design of the Replacement Steam Generators."

2) Introduction: The team identified an unresolved item associated with the dimensional controls of critical dimensions throughout the fabrication of Unit 2 and Unit 3 replacement steam generators.

Description: Based on the information gathered by the team on the differences in dimensional controls of critical parameters in Unit 2 and Unit 3 replacement steam generators, the team determined that Mitsubishi did not consider the potential impact of improving dimensional controls for tube roundness and anti-vibration bars on the final tube bundle clearances at normal operating conditions.

Additional review by the NRC is required following completion of the licensee's cause evaluation to fully assess how the dimensional controls contributed to the tube-to-tube wear in Unit 3 and then determine whether this issue represents a performance deficiency or constitutes a violation of NRC requirements. This issue is identified as URI 05000362/2012007-04, "Evaluation of Changes in Dimensional Controls during the Fabrication of Unit 2 and Unit 3 Replacement Steam Generators."

3) Design Differences: The team did not identify any significant differences in the design requirements of Unit 2 and Unit 3 replacement steam generators. The "Conformed Specification for Design and Fabrication of the Replacement Steam Generators," also known as the design specification, contained identical technical requirements for Unit 2 and Unit 3 steam generators. All replacement steam generators were required to be designed, fabricated, and tested in accordance with the 20?? edition of the American Society of Mechanical Engineers (ASME) Boiler and Pressure Vessel Code, industry standards, and NRC endorsed methods described in applicable regulatory guides. The licensee specified the same licensing requirements for all replacement steam generators.

The design specification also contained provisions to address technical or quality deviations from the requirements of the purchase order or the design specifications, including the disposition of "Repair" or "Accept as-is" conditions captured as non-conformance reports in Mitsubishi's quality assurance program and changes to documents previously approved by the licensee. This process was referred to as "Supplier Deviation Request" and allowed the licensee to review and approve deviations from the approved design specifications. The team noted that changes affecting the specified design were submitted to SCE personnel for review and approval.

The team noted that the design specification established identical provisions for the design of the replacement steam generator components including the vessel, upper/lower shell, transition cone, tubesheet, channel head, divider plate, tube supports, tubing, steam nozzle, feedwater nozzle, primary nozzles, steam flow limiting device, moisture separators/dryers, feedwater distribution system, blowdown

and sludge management, access/inspection ports, instrument/sampling taps, and loose part monitoring.

The design specification also established identical requirements for the service life and service environmental conditions of the replacement steam generators. The licensee also specified identical design loading, structural, and seismic requirements for all replacement steam generators. The design specification contained identical requirements for design transients under normal, upset, emergency, faulted, and test conditions.

Additionally, the performance requirements in the design specification were identical for each replacement steam generator, which included:

- Water Level Stability
- Circulation Ratio
- Moisture Carryover
- Steam Carryunder in the Downcomer Annulus
- Reactor Coolant Flow Rate
- Primary-To-Secondary Leakage
- Blowdown Capacity
- Thermal Rating
- Heat Transfer Surface Area
- Tube Plugging Margin
- Fouling Factor
- Overall Heat Transfer Coefficient
- Primary Side Design and Operating Pressure/Temperatures
- Secondary Side Design and Operating Pressures/Temperatures
- Primary Side Design and Operating Flows
- Secondary Side Design and Operating Flows
- Tube Material and Dimensions

The replacement steam generator design developed by Mitsubishi for SONGS Unit 2 and Unit 3 in accordance with the licensee's design specification was translated into the same set of design and fabrication drawings. The team noted that some as-built dimensions varied between Unit 2 and Unit 3 steam generators as a result of the divider plate weld repairs in Unit 3 and other manufacturing processes. However, these dimensional changes did not represent significant deviations from the original design specifications. Therefore, the team determined that no significant differences existed in the design requirements of Unit 2 and Unit 3 replacement steam generators.

4) Fabrication Differences: The team noted that the design specification contained the same general fabrication requirements for the Unit 2 and Unit 3 replacement steam generators. The design specification contained the methods required for fabrication, assembly, inspection, and testing of the replacement steam generators. The specification covered, in part, fabrication requirements for the channel head cladding, tube dimensions, tube wall thickness, tube bend radius, tube "ovality," tubesheet, tube-to-tubesheet joints, tube supports, tube bundle, machined gasketed surfaces,

non-ASME steam generator internals, welding methods, post-weld heat treatment, and allowable welding materials. The specification also contained detailed requirements for inspections, tests, and examinations, which included examination methods and personnel qualification requirements.

The design specification also required the use of "Supplier Deviation Requests" to address technical or quality deviations from the requirements of the Purchase Order or the design specifications, including the disposition of "Repair" or "Accept as-is" conditions identified during the fabrication process and changes to fabrication documents previously approved by the licensee. The team noted that fabrication issues affecting the specified design were submitted to SCE personnel for review and approval.

Based on discussions with SCE and Mitsubishi personnel and the review of documentation about the fabrication history of Unit 2 and Unit 3 replacement steam generators, the team identified the differences listed below. At the conclusion of the onsite portion of this inspection, the differences between Unit 2 and Unit 3 steam generators as a result of the fabrication process were under consideration for the cause evaluation.

- Steam Dryer Assembly – During the fabrication of Unit 2 steam generator 2E0-89, Mitsubishi identified a nonconforming condition of the steam dryer assembly that included damaged locking plates of vane jacking devices, displaced bolts, and damaged vanes. The cause of this issue was determined to be inadequate evaluation and control of the design in regard the capacity of the vane jacking devices to sustain all fabrication conditions. Specifically, the vane jacking devices failed to stay in the design position during multiple rotations of the steam generator assembly during fabrication. Mitsubishi corrected the condition, in part, by replacing all vane jacking devices and damaged vanes with a new design, which was also used in the fabrication of the Unit 2 steam generator 2E0-88, and Unit 3 steam generators 3E0-89 and 3E0-88. Additionally, Mitsubishi modified the assembly sequence of the steam dryers. For Unit 2 steam generator 2E0-89, the steam dryer vanes were assembled in-situ while the steam dryers for Unit 2 steam generator 2E0-88 and Unit 3 steam generators 3E0-88 and 3E0-89 were preassembled before installation in their final position.

- Drilling of Tubesheet Holes – The tubesheet holes in Unit 2 and Unit 3 steam generators where the tubes are inserted for final assembly were made with different drill bits. The Unit 2 steam generator tubesheets were drilled with uncoated drill bits. The Unit 3 steam generator tubesheets were drilled with titanium-nitride coated drill bits, which improved the drill bit life and resolved tooling mark issues experienced in Unit 2.

- Transition Wrapper Welding – The welding of the transition wrapper was performed in different order for each unit. For Unit 2 steam generators, the transition wrapper was welded after the tubes and anti-vibration bars were installed. In Unit 3 steam generators, the transition wrapper was welded before the installation of tubes and anti-vibration bars.

- Cladding Removal Process for the Channel Head – The removal of the stainless steel clad weld from the interior surface of the channel head base metal in preparation for the divider plate weld (i.e. structural butter weld) was performed with different methods in Unit 2 and Unit 3 replacement steam generators. For Unit 2, Mitsubishi used a machining process to remove the cladding in both steam generators. In Unit 3, Mitsubishi used an air carbon-arc gouging process. This method resulted in separation of the butter weld during hydrostatic testing. The root cause evaluation concluded that the air carbon-arc gouging process left carbon deposits on the base metal. Gouging was followed by grinding which was designed to remove the heat affected zone and expected to completely remove the carbon deposits. However, the grinding process left carbon deposits behind, which resulted in the localized areas of high carbon and high base metal hardness due to carburization. The repair of the Unit 3 divider plate welds is addressed in further details in Section 12.0 of this report.

- Helium Leak Test – As part of the fabrication process, Mitsubishi performed a Helium-Nitrogen leak test on the secondary side of the replacement steam generators to check for leaks on the tube-to-tubesheet welds. For all steam generators, this test was performed after completion of the tube-to-tubesheet weld, but prior to the penetrant examination of the tube-to-tubesheet welds and final tube expansion. The leak tests for Unit 2 steam generators were performed at a higher pressure than Unit 3 steam generators. Additionally, the Unit 2 tests were performed using a temporary welded cap on top of the steam generator shell to enclose the secondary side, while a temporary clamped cap was used in Unit 3 steam generators. All tests required the same holding time before starting the test and the same leak rate acceptance criteria.

- Preliminary and ASME Section III Hydrostatic Tests – The number of hydrostatic tests performed in accordance with ASME Section III on the primary and secondary sides of the replacement steam generators varied between Units due to the results of the initial test in each steam generator. For each replacement steam generator, the hydrostatic tests were performed first on the primary side and then on the secondary side. Both Unit 2 steam generators met the acceptance criteria in the first hydrostatic test. However, during the first hydrostatic test on the secondary side of Unit 3 steam generator 3E0-89, Mitsubishi identified leakage through a tube-to-tubesheet weld that exceeded the ASME Code acceptance criteria. After repairs were completed to address the leakage, the hydrostatic tests were re-performed. Following the second set of hydrostatic tests on Unit 3 steam generator 3E0-89, cracking indications were identified in the divider plate-to-channel head weld. After repairs were completed to address the divider plate weld cracks, a third set of hydrostatic tests were performed in Unit 3 steam generator 3E0-89. Since similar cracking indications of the divider plate weld were identified in Unit 3 steam generator 3E0-88, a second set of hydrostatic tests was performed in this steam generator after the divider plate weld was repaired.

  Additionally, prior to each ASME Section III hydrostatic test, Mitsubishi performed a preliminary hydrostatic test of the primary and secondary side of the steam generators at design pressure to check for leakage at the feed pump, pressure

filling line, temporary gaskets, and temporary seals. Therefore, each replacement steam generator received an equal number of preliminary and ASME Section III Hydrostatic Tests. The total numbers of hydrostatic tests for each steam generator are summarized below.

| Number of Preliminary and ASME Section III Hydrostatic Tests | | | |
|---|---|---|---|
| **Steam Generator** | **Primary Side** | **Secondary Side** | **Results** |
| 2E0-89 | 1 | 1 | Acceptance criteria met |
| 2E0-88 | 1 | 1 | Acceptance criteria met |
| 3E0-89 | 1 | 1 | Leakage detected in tube-to-tubesheet weld |
| | 1 | 1 | Divider plate weld separation weld identified |
| | 1 | 1 | Final – Acceptance criteria met |
| 3E0-88 | 1 | 1 | Divider plate weld separation weld identified |
| | 1 | 1 | Final – Acceptance criteria met |

- Pre-Service Inspection – The design specification established similar requirements for the pre-service eddy current examination of Unit 2 and Unit 3 replacement steam generators. The team noted that the eddy current examinations of Unit 2 and Unit 3 steam generators were performed with similar eddy current techniques, including essential variables. However, the circumstances in which the examinations were performed varied for each Unit. For Unit 2, the pre-service examination was performed after the steam generators were delivered at the SONGS jobsite. The steam generators were examined on the shipping saddles, where the position of the tube bundle was at 45 degrees from the gravity neutral position. This position was dictated by the location of the steam generator lifting trunnions which were installed on the upper shell at 45 degree orientation from the steam generator centerline. For Unit 3, the pre-service eddy current examination was performed at the Mitsubishi Kobe facility while the steam generators were still on the fabrication rollers and in the gravity neutral position (i.e. divider plate oriented horizontally). The decision to perform the Unit 3 pre-service examination at the Mitsubishi facility was dictated by delivery schedule considerations resulting from the divider plate weld repairs.

- Flow Limiter for Primary Inlet Nozzles – The replacement steam generators were designed with a flow limiter located in the primary inlet nozzle (see figure below) in order to make the reactor coolant system flow similar to the flow rate of the original steam generator and not exceed the maximum allowable reactor coolant system flow rate. The licensee's evaluation for the engineering design package determined that although the original steam generators had a number of plugged tubes, the reactor coolant system flow rate of the original steam generators was near the design requirement. Because the replacement steam generators has 377 more tubes than the original steam generators, and contained tubes with u-bends versus "square bends", the pressure drop of the replacement steam

generators with no plugged tubes would be much less than the original steam generators resulting in a higher flowrate.

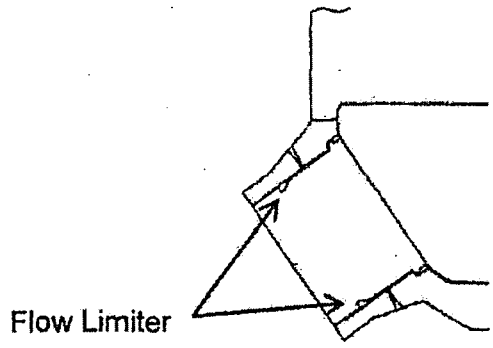


**Replacement Steam Generator Primary Inlet Nozzle (For Illustration Purposes Only)**

The flow limiter was designed to ensure the total "best estimate" reactor coolant flow rate with the replacement steam generators installed would not exceed 106.5 percent of the design volumetric flow rate of 396,000 gallons per minute at a reactor coolant system cold leg temperature of Tcold = 540.9°F. For Unit 2 replacement steam generators, the flow limiter diameter to nozzle inner diameter ratio was 0.94 while the ratio for Unit 3 steam generators was 0.915 due to Unit ? reactor coolant pump replacement. The flow limiter dimensions resulted from a scaled model test performed by Mitsubishi and it was designed to be machined as part of the nozzle base metal.

- Pitch Distance of Tube Support Plate Drilled Holes in Unit 2 Steam Generator 2E0-89 – During fabrication of the tube support plates for Unit 2 steam generator 2E0-89, quality control inspections identified unacceptable measurements of the pitch distance between drilled holes. Mitsubishi fabrication procedures required verification of the total center-to-center distance between ten inline drilled holes at certain sample points of the tube support plate. The dimensional verification checks identified a total of 200 measurements in tube support plate number 3 and 10 measurements in tube support plate number 6 that did not meet the dimensional acceptance criteria established in the fabrication procedures. Mitsubishi evaluated this non-conformance condition and accepted the condition "as-is" with the SCE's approval. The technical justification for accepting the condition addressed four elements: (a) the impact of the condition on the ability to insert the tubes through the affected areas of the tube support plates, (b) resulting stress on the tubes after insertion, (c) impact of the condition on the tube to anti-vibration gap size, and (d) possible occurrence of tube scratch during inspection. Similar unacceptable measurements were not identified in Unit 2 replacement steam generator 2E0-88 or Unit 3 replacement steam generators 3E0-89 and 3E0-88.

- Tube-to-Tube Clearance in Unit 2 steam generator 2E0-89 – During fabrication of Unit 2 replacement steam generator 2E0-89, interference checks identified that the clearance between the tubes in Rows No. 28 and 30 in Column No. 22 was less than the minimum clearance of 0.13-inch specified in Mitsubishi's inspection

procedure. The condition was accepted "as-is" by Mitsubishi and SCE through the supplier deviation request process. The main considerations of the technical evaluation included: (a) thermal expansion difference, (b) tube expansion due to operating pressures, (c) tube displacement due to out-of-plane flow induced vibration, and (d) tube displacement due to seismic acceleration. The team noted that no tube-to-tube wear indications were identified in this area of the tube bundle.

- Anti-Vibration Bar Spacing Issues in Unit 2 Steam Generator 2E0-89 – During fabrication of Unit 2 replacement steam generator 2E0-89, quality control inspections identified unacceptable gaps between tubes and the anti-vibration bars in the outside tube columns. The affected area was identified as welding zone-4. The apparent cause for the anti-vibration bar spacing issue was due to performing the welding of zone-4 while the steam generator was oriented horizontally with this welding zone oriented to the bottom of the bundle. In this configuration, the tube bundle experienced sagging at the time of welding due to gravity. After completion of welding zone 4, the steam generator assembly was rotated 180 degrees for additional assembly steps, but the sagging in the opposite direction caused enlargement of the gaps in welding zone 4 and this enlargement remained approximately the same for all subsequent rotations. When zone-4 was rotated 180-degrees after welding, deflection or sagging of the tube retaining bars due to gravity slightly pulled the anti-vibration bars, increasing the gap between the tube and the anti-vibration bars in this zone.

  With the licensee's approval, Mitsubishi implemented various corrective actions to address the condition in the pending Unit 2 replacement steam generator 2E0-88 and subsequently in Unit 3 steam generators which included: (a) use of smaller spacer blocks between tubes for the installation of anti-vibration bars, (b) re-define the welding zones to limit welding in the horizontal position, and (c) reduce rotations during welding of the other bundle zones. Mitsubishi performed rework activities in Unit 2 steam generator 2E0-89 to restore anti-vibration bar spacing to design specifications. These activities resulted in better gap distribution. All the tube-to-anti-vibration bar gaps exceeding the initial dimensional criteria were further evaluated and accepted in accordance with Mitsubishi's gap size evaluation procedure.

- Rotations of Steam Generator Assembly for Anti-Vibration Bar Installation and Welding – The team noted that welding of anti-vibration bars structure required rotating the steam generators several times. As a result of the corrective actions generated to address the anti-vibration bar spacing issues in Unit 2 steam generator 2E0-89, the installation procedure was revised to reduce the number of rotations for anti-vibration bar installation to attain better gap control. This procedure revision resulted in different number of rotations in each replacement steam generator. Steam generators Unit 2 E0-89, Unit 2 E0-88, Unit 3 E0-89, and Unit 3 E0-88 received 11.25, 4, 3.5, and 3.5 rotations, respectively, during installation of the anti-vibration bars structure.

- Temporary Installation of Plastic Ties – In order to limit the displacement of anti-vibration bars during rotation of the steam generator assembly for welding of the

anti-vibration bars structure, Mitsubishi revised the installation procedure to install temporary plastic ties between the retaining bars and the tubes. This step of the anti-vibration bar assembly process was performed in a different sequence for Unit 2 and Unit 3 steam generators. For Unit 2, the installation of plastic ties occurred after welding the transition wrapper, the Helium leak test, and tube hydraulic expansion, but before welding the channel head to the tubesheet, the hydrostatic tests, and the pre-service inspection. In Unit 3, the installation of plastic ties was performed between welding the transition wrapper and the Helium leak test.

- Dimensional Controls of Anti-Vibration Bar Structure – According to Mitsubishi's preliminary cause evaluation taking place at the time of this inspection, the controls of critical dimensions affecting the clearances between the tube and the anti-vibration bars were gradually improved throughout the fabrication of the Unit 2 and Unit 3 steam generators. This improvement on dimensional controls was a consideration for the determination of the failure mechanism leading to tube-to-tube wear in Unit 3.

  The first dimensional control under consideration was the improvement of tube roundness in the section of the tubes that was bent to form the U-bend shape. During fabrication of Unit 2 steam generator 2E0-89, the supplier of tubular product for Mitsubishi (i.e. Sumitomo), experienced quality issues to meet the G-values established in the design specifications, resulting in a high number of tube rejections. The G-value was a measure of departure from roundness, or "ovality," after the tubes were bent and it was controlled in order to control the gap between tubes and anti-vibration bars (see figure below). The G-values were measured at different locations along the U-bend section of the tubes for a selected number of tubes per row, as established in Mitsubishi's procedure. The acceptance criteria for G-value varied depending on the row where the tubes were installed. The acceptance criteria also remained the same throughout the fabrication of Unit 2 and Unit 3 replacement steam generators.

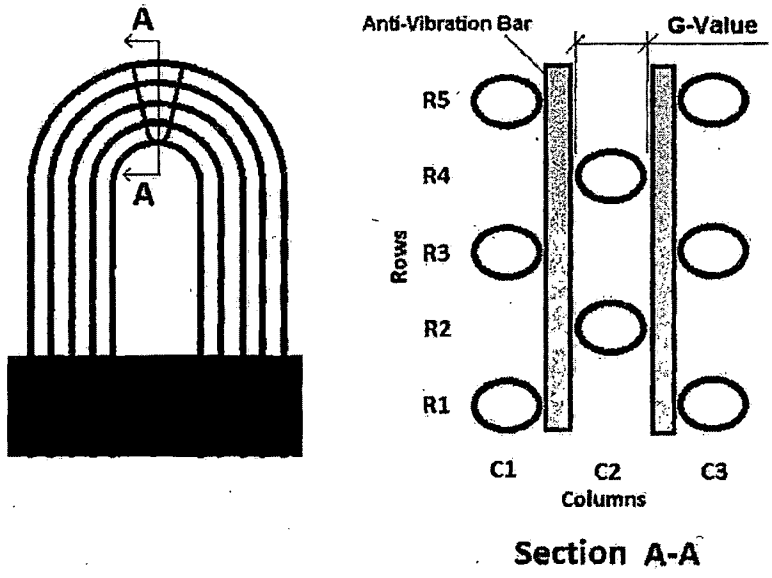


**Description of G-Value Parameter (Conceptual Drawing – For Illustration Purposes Only)**

Based on discussions with licensee personnel and documentation reviews, the team noted that Sumitomo implemented measures to improve the quality of the tube bending process which resulted in less deviation of G-values and a reduction in the amount and variability of tubing "ovality." Based on the statistical analysis of G-value data collected during fabrication of the Unit 2 and Unit 3 steam generators, Mitsubishi concluded that the G-values gradually decreased since the fabrication of the first steam generator.

Another dimensional control under consideration was the variability of anti-vibration bar dimensions. Mitsubishi's fabrication procedures required inspection of various dimensions of the anti-vibration bars to control the gap between the anti-vibration bars and the tubes. These dimensions were: thickness in the straight sections, twisting and flatness of the straight sections after bending, and thickness of the anti-vibration bar tip (i.e. nose) after bending. Among these dimensions, the twisting and flatness of the straight sections after bending were verified using a "Go or No-Go" approach based on the acceptance criteria in Mitsubishi's procedures but no specific measurements were required to be maintained by procedure. Additionally, the acceptance criteria for anti-vibration bar dimensions remained the same throughout the fabrication of Unit 2 and Unit 3 replacement steam generators. Mitsubishi conducted a preliminary statistical analysis of the available dimensional data for anti-vibration bars and the team concurred that there were minor differences in the statistical distribution of these dimensions in Unit 2 and Unit 3 steam generators.

Comn
any de
[gew]l
inform

Engineering Change Package (10 CFR 50.59): The team determined that the licensee's evaluation for changes in the updated final safety analysis report's design methodologies for the replacement steam generators was consistent with SONGS procedures for the implementation of 10 CFR 50.59 requirements. The licensee's

evaluation contained in Engineering Change Packages 800071702 and 800071703 for the Unit 2 and Unit 3 replacement steam generators, respectively, determined that the replacement of the original steam generators did not affect the current licensing basis to the extent of needing prior approval from the NRC as required by 10 CFR 50.59.

In the 50.59 screening evaluation associated with the engineering change package for the Unit 2 and Unit 3 replacement steam generators, the licensee determined that the proposed activity did not adversely affect a design function, or the method of performing or controlling a design function described in the updated final safety analysis report. The licensee also determined that the steam generator replacement activity did not change a procedure in a manner that adversely affected how an updated final safety analysis report design function is performed or controlled. Additionally, the licensee determined that the steam generator replacement activity did not involve a test or experiment not described in the updated final safety analysis report. The licensee evaluated the following updated final safety analysis report design functions in the 50.59 screening:

- Steam Generator Design Functions
- Reactor Coolant System Structural Integrity
- Emergency Core Cooling System Performance
- Non-Loss of Coolant Accident Transients
- Containment Pressure-Temperature Analysis
- Low Temperature Overpressure Protection
- Reactor Protection System, Engineered Safety Features Actuation System, Core Operating Limit Supervisory System, and Core Protection Calculations
- Nuclear Steam Supply System Performance
- Non-Safety Related Control Systems Performance

However, the 50.59 screening evaluation identified three methods of analysis described in the updated final safety analysis report that were affected by the proposed steam generator replacement and required further evaluation against the criteria in 10 CFR 50.59. The affected methodologies are described below:

- Seismic Analysis of Reactor Vessel Internals – The original analysis of SONGS Unit 2 and Unit 3 reactor vessel internals with the original steam generators was performed with the methodology described in Combustion Engineering Topical Report CENPD-178, "Structural Analysis of Fuel Assemblies for Combined Seismic and Loss of Coolant Accident." Subsequent to the submittal of this report, Combustion Engineering revised the methodology by modifying modeling techniques, computer codes, testing methods, and acceptance criteria in response to changes in licensing requirements. Consequently, the original report was resubmitted to the NRC as CENPD-178-P, Revision 1-P, August 1981. This revision was approved by the NRC in a Letter from H. Bernard to A. Scherer, "Acceptance for Referring of Licensing Topical Report CENPD-178," dated August 6, 1982. The licensee used this revised methodology for the replacement steam generators and considered it as a methodology approved by the NRC for the intended application.

- Reactor Coolant System Structural Integrity – The structural analysis of the original steam generators used ANSYS software for the thermal and stress analyses while the replacement steam generators were analyzed using ABAQUS software. ANSYS was described in the updated final safety analysis report as a large-scale, general-purpose, finite element program for linear and nonlinear structural and thermal analysis of the reactor coolant loop components. The licensee considered ABAQUS to be similar to ANSYS. The licensee compared both programs using thermal and stress sample problems. The comparison demonstrated that the results varied from theoretical solutions by no more than 1 percent, and ABAQUS and ANSYS results themselves were also within 1 percent of each other. The variability of results was determined to be within the margin of error for the subject type of analysis.

- Tube Wall Thinning Analysis – The original steam generator analysis used CEFLASH computer program for the main steam line break mass-energy blowdown analysis, whereas the replacement steam generator analysis used manual calculations to represent the main steam line break blowdown loads by applying the maximum possible tube differential pressure, which bounded the pressure calculated by CEFLASH.

  For loss of coolant accident analysis, the original steam generator used STRUDL computer program to calculate displacement histories and then ANSYS computer program to calculate tube stresses. The tube stresses for the replacement steam generators were determined using ANSYS computer program based on the blowdown forces. For the original steam generators the combination of loads analyzed was primary loop pipe break plus design basis earthquake and main steam line break plus design basis earthquake. For the replacement steam generators, the loss of coolant accident, design basis earthquake, and the main steam line break events were combined as one limiting event, which SCE considered to be a more conservative method of evaluation relative to the original steam generators. The licensee determined that the results of the tube wall thinning analysis for the replacement steam generators were conservative or essentially the same and the methodology used did not represent a departure from a method of evaluation described in the updated final safety analysis report.

Further discussion is contained in Section 13.0 of this report on the methodology used by the licensee for the reactor coolant system structural integrity and tube wall thinning analysis.

The team noted that a key methodology for the design of the original and replacement steam generators was the thermal-hydraulic code used to model the flow conditions in the steam generators. The original steam generators were designed using ATHOS thermal-hydraulic code while the replacement steam generators were designed with a proprietary code from Mitsubishi (Need to verify this with Joel. Think the generators were designed before ATHOS was developed in 1985). Mitsubishi's code was accepted by SCE for the design of the replacement steam generators. The team noted that the updated final safety analysis report did not specifically describe ATHOS as the code used for the design of the original steam generators and therefore the change in thermal-hydraulic code did not

constitute a change in methodology or a change in an element of a methodology described in the updated final safety analysis report. The updated final safety analysis report did describe the computer code CRIB as the code used to analyze overall steam generator performance. As described in the updated final safety analysis report, CRIB was used to establish the recirculation ratio and fluid mass inventories as a function of power level in the original steam generators.

With regard to the major design changes between the original and replacement steam generators, the updated final safety analysis report did not specify how the original steam generators relied on special design features such as the stay cylinder, tubesheet, tube support plates, or the shape of the tubes to perform the intended safety functions. The description of the original steam generators was focused on the overall thermal performance characteristics and the applicable codes and standards used for fabrication. The updated final safety analysis report provided a brief description of the egg-crate tube support plate design and its function to prevent concentration of impurities in the tube-to-tube support plate gap, which could lead to tube degradation. The updated final safety analysis report also described degradation issues of the egg-crate tube support plate design as a result of flow-accelerated corrosion and the corrective actions taken to mitigate this degradation mechanism.

Regulatory Guide 1.187, "Guidance for Implementation of 10 CFR 50.59, Changes, Tests, and Experiments," November 2000, allows the use of NEI 96-07, "Guidelines for 10 CFR 50.59 Implementation," Revision 1 for methods that are acceptable for complying with 10 CFR 50.59. Per NEI 96-07, changes affecting structures, systems, or components that are not explicitly described in the updated final safety analysis report can have the potential to adversely affect structure, system, or component design functions that are described and thus may require a 10 CFR 50.59 evaluation. Consistent with this guidance, SCE's 50.59 screening evaluated the differences in subcomponents between the original steam generators and replacement steam generators as to whether the differences adversely affected the design function (reactor coolant pressure boundary) of the steam generators. The replacement steam generators were designed and fabricated in accordance with quality assurance requirements, and 10 CFR 50.59 does not require the licensee to presume deficiencies in the design or fabrication.

Based on the updated final safety analysis report description of the original steam generators, one unresolved item associated with the 50.59 review was identified and is discussed in Section 13.0 of this report.

## 5.0 Quality Assurance/Quality Control (Charter Item 5) (Mitsubishi Charter Item 4)

The team reviewed numerous documents from both SCE and Mitsubishi (including sub-contractors, such as Sumitomo) associated with the design, fabrication, and manufacturing of the steam generators for both units. The team reviewed SCE and Mitsubishi's quality assurance program, procedures and implementation activities for the control of purchased material, equipment, and services; inspections; procurement document control; and corrective action and nonconformance activities. Specifically, the team reviewed a sample of Mitsubishi nonconformance reports, audit, survey, all

SONGS condition action requests, audits, surveillances, stop work orders, and supplier deviation requests associated with the design and manufacturing of the steam generators. The team concluded that these portions of SCE and Mitsubishi's quality assurance program regarding its safety-related activities were appropriately controlled and implemented.

5.1 SONGS Quality Assurance/Quality Control

a. Inspection Scope

The team reviewed SCE's implementation of their quality assurance program to determine if it complied with the requirements of 10 CFR 50, Appendix B, "Quality Assurance Criteria for Nuclear Power Plants and Fuel Reprocessing Plants." The team reviewed SONGS implementing procedures, quality assurance manual, vendor audits, procurement specifications, corrective action requests, and numerous other documents, as well as interviewed a number of quality assurance/control and engineering personnel to determine the appropriateness of activities affecting quality conducted during fabrication, manufacturing and delivery of the replacement steam generators.

b. Observations and Findings

No findings were identified.

1) Policies and Procedures for Supplier Selection and Control

The team reviewed Quality Assurance Manual, Section 17.2.7, "Control of Purchased Material and Services," which defines the process used to ensure that purchased material, source material, and subcontracted services conform to applicable codes and standards. Section 17.2.7.2 of the quality assurance manual provided measures for the approval and control of suppliers and describes the methods that SCE uses to conduct technical and quality assurance evaluations of potential suppliers. Specifically, SCE evaluated an audit performed by Dominion (DA 2002-92, "Dominion Audit of Mitsubishi Heavy Industries"). The evaluation was performed and documented in accordance with SONGS policies and implementing procedures that govern the control of purchased material, equipment, and services. The results of SCE Evaluation MHI-01-04, "Evaluation and Review of Contractor, Consultant, Utility or Licensee Audit Report," stated that Mitsubishi was conditionally qualified for the fabrication and design of the replacement steam generators. An audit was performed by SCE when a sufficient quantity of work had been performed to demonstrate implementation of Mitsubishi's quality assurance program. Southern California Edison-'s oversight of Mitsubishi also included verification of Mitsubishi's activities during fabrication, inspections, testing and shipment of the procured item. After approximately 14 months from the initial evaluation SCE removed the conditional qualification based on results from Evaluation MHI-10SV-05, "Source Evaluation Report of MHI," dated February 8, 2006, and MHI-3SV-06, "Source Verification Report of MHI," dated May 3 2006, and implementation and verification of specific corrective actions. Part of the SONGS oversight plan of Mitsubishi included the placement of SCE quality assurance/quality control personnel (residents) at the Mitsubishi facility. Plan SGR-A10183, "Replacement Steam

Generator Resident Oversight Plan," described the roles and responsibilities of the resident management, engineering, and quality oversight implementation strategy for the replacement steam generators. This oversight plan was created to provide reasonable assurance that the design, licensing, fabrication, delivery, and acceptance of the SONGS replacement steam generators were performed in accordance with specified SCE, industry, regulatory, and Code requirements. The team noted that after the resident was placed at Mitsubishi, Source Verifications and Surveillances performed by SCE decreased. After the NRC team conducted several interviews with the SCE personnel responsible for oversight of Mitsubishi it was determined that the resident provided adequate oversight of Mitsubishi's activities. Nuclear Oversight Division Project Oversight Quarterly Reports were provided by SCE that demonstrated no decrease in SCE oversight of Mitsubishi. These responsibilities were shifted to the resident at Mitsubishi. During the review of the documentation generated by the resident the NRC team noted that the resident was performing these activities on behalf of SCE.

2) Purchase Order Review

The team reviewed purchase order 6C294014 from Edison Material Supply LLC, issued September 28, 2004, for the design, fabrication, and delivery of four replacement steam generators for SONGS Units 2 and 3. The procurement order stated that all related work was to be performed in accordance with Specification SO23-617-01, "Specifications for Design and Fabrication of RSG for Units 2 and Unit 3." Specification SO23-617-01 identified the codes, standards, regulations and other documents applicable to the design, fabrication, and delivery of the replacement steam generators. For example Specification SO23-617-01 invoked American Society of Mechanical Engineers Boiler and Pressure Vessel Code, American National Standards, American Society for Testing and Materials Standards, and Electric Power Research Institute Technical Report 016743-V2R1, "Guidelines for PWR Steam Generator Tubing Specifications and Repair," among others.

3) Supplier Audit and Surveillance Reports

The team reviewed a sample of audits and surveillances performed on Mitsubishi to verify SCE's approval process of Mitsubishi and subcontracted services. The team noted that the audits and annual assessments reviewed were adequately documented and provided evidence of Mitsubishi's compliance with quality assurance requirements. The team also verified that audit reports supported the conclusions made by SCE.

5.2 Mitsubishi Quality Assurance/Quality Control

a. Inspection Scope

The team reviewed Mitsubishi implementation of their quality assurance program to determine if it complied with the requirements of 10 CFR 50, Appendix B, "Quality Assurance Criteria for Nuclear Power Plants and Fuel Reprocessing Plants." The team also reviewed a sample of reports from audits and surveys that Mitsubishi

conducted of various subcontractors, such as Sumitomo to determine the adequacy of oversight provided by Mitsubishi activities affecting quality and that contracted activities were implemented in accordance with the Mitsubishi-approved quality assurance program. In addition, the team reviewed Mitsubishi's Approved Suppliers List to verify that vendors listed were qualified according to Mitsubishi's specifications and that the list was maintained current.

b. Observations and Findings

No findings were identified.

1) Policies and Procedures for Supplier Selection and Control

The team reviewed Mitsubishi Quality Assurance Manual, Section 4, "Procurement Control," of the which defines the process used to ensure that purchased material, source material, and subcontracted services conform to the applicable requirements of the American Society of Mechanical Engineers Code and to customer procurement documents. Section 4.4 of the Quality Assurance Manual provided measures for the approval and control of suppliers and described the process that Mitsubishi used to conduct surveys or audits, as required. Additionally, Section 4.4 provided guidance for the preparation of purchase specifications and subcontract specifications, including the imposition of regulatory requirements for the American Society of Mechanical Engineers Code, Section III products.

The team reviewed Procedure BUH94-06, "Vendor Evaluation Procedure," which provided guidance on the evaluation of the quality control capability of suppliers by performing surveys, audits and performance evaluations of the supplier quality assurance program. Procedure BUH94-06 provided a detailed description of the entire process to be followed by auditors before, during and after a survey/audit was performed.

No issues were identified.

2) Supplier Audit and Surveillance Reports

The team reviewed a sample of external audits and surveys to verify Mitsubishi's approval process of Sumitomo Metal Industries, Limited, Steel Tube Works and Sumitomo Metal Industries, Limited, Pipe & Tube Company Wakayama Steel Works. The team noted that the audits and annual assessments reviewed were adequately documented and provided evidence of each company's compliance with quality assurance program requirements. The team also verified that audit checklists were prepared and completed for the audit and contained sufficient objective evidence to support the conclusions made by Mitsubishi.

During the review, the team learned that as a consequence of nonconformance report UHNR-SON-RSG-06N005 related to inadequate lot control during final mill annealing of the tubing, Mitsubishi issued a stop work order to Sumitomo. As part of their process Mitsubishi visited Sumitomo to find the root cause of the nonconformance. After a review of Sumitomo's corrective action, Mitsubishi was

able to confirm the adequacy of the corrective actions and preventive actions. Mitsubishi released Stop Work Order UHH-G06A097 imposed on Sumitomo.

On May 8, 2007, Mitsubishi performed Special Audit UHQ-07N004, on Sumitomo, in order to confirm adequacy of activities based on Sumitomo Corrective Action Plan UHCP-07N004. During the audit Mitsubishi found two findings and made one recommendation. Both findings required corrective action from Sumitomo. The Mitsubishi audit indicated that Sumitomo was not able to perform adequate activities for manufacturing heat transfer tubing in accordance with Sumitomo's shop manual. The causes of the deficiencies identified during the audit were a result of Sumitomo's staff failing to follow the shop manual requirements. Because the two findings were related to the stop work order, Mitsubishi did not allow Sumitomo to start manufacturing activities until adequate implementation of corrective actions were confirmed by Mitsubishi. On June 21, 2007, Mitsubishi verified Sumitomo implementation of the corrective actions. During this visit at Sumitomo, Mitsubishi verified the operations involving straight tube fabrication prior to tube bending operations were performed in accordance with Sumitomo's shop manual. Mitsubishi found that the same type of corrective actions taken by Sumitomo for straight tube fabrication operations applied to tube bending operations. During the review of the implementation of the corrective actions Mitsubishi could not verify acceptability of Sumitomo tube fabrication operations for the tube bending process. Mitsubishi allowed Sumitomo to restart operation only for the straight tube fabrication. On July 13, 2007, Mitsubishi subsequently confirmed the adequacy of Sumitomo corrective actions on tube bending processes. Mitsubishi verified that the bending operations followed the requirement of the Sumitomo' shop manual. On July 17, 2007, Mitsubishi lifted the restrictions imposed on Sumitomo and they were allowed to restart operations.

No issues were identified.

3) Maintenance of the Approved Supplier List

The team reviewed Mitsubishi Quality Assurance Manual Section 4, "Procurement Control," which defined the controls for the maintenance, distribution, and update of Qualified Vendor List UES-20100006. According to Section 4, the Nuclear Plant Quality Assurance Section had the responsibility for preparing, approving, and distributing the qualified vendor list and any subsequent revisions. In addition, a review by the quality assurance engineer was required prior to final document approval. Mitsubishi was informed of changes to their supplier's quality assurance manuals through procurement requirements imposed on the suppliers on their certificate of qualification as an approved vendor. If the vendor did not maintain their quality assurance program, they were removed from the qualified vendor list. Prior to issuing a Quality Assurance Manual revision, approved vendors were required to send a copy to Mitsubishi for review and approval, after which Mitsubishi updated the qualified vendor list with the latest revision number and date.

No issues were identified.

5.3 Quality Assurance Conclusion

The team concluded that the quality assurance program requirements for quality activities to support the replacement steam generator project were consistent with the requirements of 10 CFR Part 50, Appendix B. The team also concluded that SCE's and Mitsubishi's quality assurance program requirements were appropriately translated into implementing procedures to support the replacement steam generator project.

6.0 Implementation of Steam Generator Industry Information (Charter Item 6) (Mitsubishi Charter Item 3)

a. Inspection Scope

The team reviewed procurement documentation, Mitsubishi design documentation, and the 10 CFR 50.59 review package to assess SCE's and Mitsubishi's consideration and implementation (as appropriate) of operating experience as part of the steam generator replacement project, and in the steam generator tube inspections conducted during the current outages for SONGS Units 2 and 3. The team interviewed various personnel with respect to operating experience considerations relating to major design changes incorporated into the replacement steam generators. The team reviewed operating experience in NRC generic communications and worldwide plant operating experience that might potentially be relevant to conditions observed at SONGS.

b. Observations and Findings

No findings were identified.

The original steam generators installed throughout the domestic fleet of pressurized water reactors, including SONGS, experienced widespread corrosion of the tubes and tube support plates, stress corrosion cracking of the tubes, and wear at tube supports. These problems led to the replacement of nearly all of the original steam generators, in most cases well before the end of their design lifetime. For SONGS, the design of the replacement steam generators included a number of design changes to correct life limiting problems with the original steam generators, based in part on consideration of SONGS-specific and industry-wide operating experience. This included use of more corrosion resistant materials for the tubing and tube support plates to mitigate corrosion and stress corrosion cracking issues experienced in the past. The licensee's bid specification required that the stay cylinder feature of the original steam generators be eliminated to maximize the number of tubes that could be installed in the replacement steam generators and to mitigate past problems with tube wear at tube supports caused by relatively cool water and high flow velocities in the central part of the tube bundle. Mitsubishi employed a broached trefoil tube support plates instead of the egg crate supports in the original design. In addition to providing for better control of tube to support plate gaps and easier assembly, the broached tube support plates were intended to address past problems with the egg crate supports by providing less line of contact and faster flow between the tubes and support plates, reducing the potential for deposit buildup and corrosion. Mitsubishi selected a u-bend configuration for the upper part of the tube bundle instead of the square bend design of the original steam generators based on its experience that u-bends were easier to fabricate and support and were easier to inspect.

The team's review of Mitsubishi design documentation for the anti-vibration bars indicates that Mitsubishi considered wear in the u-bend region as the most important issue affecting the anti-vibration bar design. Mitsubishi reviewed operating experience regarding wear in the u-bend region of replacement steam generators and trended the experience data as a function of steam generator manufacturer, tube packing arrangements (tube pitch, square versus triangular arrays), and steam generator size. The SONGS steam generators are relatively large, and Mitsubishi acknowledged that this and the tight tube packing geometry could affect wear experience. Mitsubishi stated that the SONGS replacement steam generator were designed to minimize these concerns by providing more support points with shorter spans in the u-bend region along with effective zero gaps between the tubes and anti-vibration bars during steam generator operation. Mitsubishi manufacturing was designed on achieving very small uniform gaps between the tubes and anti-vibration bars during assembly.

Engineering Change Package NECP 800071703 for the replacement steam generators evaluated industry operating experience as it related to the manufacture and operation of the replacement steam generators. Several of these experiences related to fabrication issues, lack of weld quality, material defects, loose parts, lack of cleanliness, and failure to fully expand tubes in the tubesheet. The licensee found most of these issues to be applicable to the replacement steam generators at SONGS, but that these kinds of issues would be adequately addressed by the supplier's (typically Mitsubishi) augmented quality assurance procedures and continuous quality oversight by the licensee. The licensee also cited augmented receipt inspections, in-process verifications, foreign material exclusion and control, and cleanliness inspections on the part of the supplier or the licensee, as applicable, as addressing these issues.

The licensee addressed industry operating experiences relating to stress corrosion cracking of steam generator tubing by noting that the Alloy 690 thermally treated tubing in the replacement steam generators were expected to be substantially more resistant to stress corrosion cracking than the tubing alloys used in earlier model steam generators. The licensee also addressed experience at another unit which experienced tie rod and consequential tube bow as a result of differential thermal expansion between the tubes and shroud and unexpected interference between some tube support plates. The stay rod (equivalent to tie rods at other unit) and shroud material for the replacement steam generators have been selected to have similar coefficients of thermal expansion which would preclude a similar problem.

Steam Generator Degradation Assessment 51-9176667-001 (prepared by AREVA) supporting steam generator inspections during the current outages for Units 2 and 3 evaluated industry operating experience relating to steam generator in-service inspections. This included operating experience reports, including NRC Information Notice 2010-05, "Management Of Steam Generator Loose Parts And Automated Eddy Current Data Analysis," relating to eddy current test probe issues and data analysis errors. In response to these issues, SCE personnel stated that specific training was given to the data analysts at SONGS on the lessons learned from these experiences and where applicable, appropriate data was included in the SONGS site specific performance demonstration. The licensee also described additional measures that would be taken at SONGS to address these issues. The review also addressed operating experience reports dealing with unexpected tube support indications or lack

thereof. In response, SCE stated that indicated anti-vibration bar locations by eddy current will be compared to the anti-vibration bar locations specified in the Mitsubishi design drawings.

Steam Generator Degradation Assessment 51-9176667-001 also addressed numerous operating experience reports involving loose parts and foreign objects in steam generators, including several instances involving resultant damage to steam generator tubing. These reports included NRC Information Notices 2004-10, "Loose Parts in Steam Generators," 2004-16, "Tube Leakage Due to a Fabrication Flaw in a Replacement Steam Generator," and 2004-17, "Loose Part Detection and Computerized Eddy Current Analysis in Steam Generators." Some of these reports dealt with eddy current probes, or pieces of probes, which were left behind as loose parts on the primary side. Most of the operating experience reports related to lose parts and foreign objects on the steam generator secondary side. In response, SCE approach for addressing this issue was through procedure changes and secondary side visual inspections which included the open tube lane, the entire peripheral annulus, and appropriate visual examination followup on eddy current indications of possible loose parts. The inspection with the exception of the loose parts component was performed, as scheduled, during the current refueling outage for SONGS Unit 2. The inspection for loose parts will be performed at the first scheduled inspection during the next refueling outage. The team noted that possible loose parts indications were not found during the 100 percent eddy current test inspection of the Unit 3 steam generators during the current outage. The team also noted that secondary side visual inspections were performed in the upper bundle area of the Unit 3 steam generators to evaluate the tube-to-retainer bar intersections and in a limited area above the 7th tube support plate.

The NRC staff issued many generic communications relating to steam generator tube integrity issues since the 1980s. The team reviewed these documents and determined that many of these related to the potential for stress corrosion cracking of the tubes which the staff found was not expected to be a concern for the thermally treated Alloy 690 material in the SONGS replacement steam generators by virtue of its greatly enhanced resistance to stress corrosion cracking. Most of the others related to problems encountered with eddy current flaw detection and sizing, the occurrence and detection of loose parts/foreign objects, and monitoring of primary to secondary leakage. The team's review indicated that lessons learned from these NRC generic communication documents had generally been incorporated into industry guideline documents relating to steam generator inspections, monitoring of primary-to-secondary leakage, and other guidelines documents prepared by the Electrical Power Research Institute. This information was incorporated into the licensee's inspection and leakage monitoring guidelines.

The team reviewed NRC generic communications not falling into one of the above categories for potential relevance to SONGS Unit 2 and 3. One of these was NRC Information Notice 2004-16 concerning an operational leakage event at another plant due to damage caused by a packing screw during transport to the steam generator manufacturer. The licensee stated in its steam generator change package that this incident was precluded for SCE by prohibiting the use of screws and nails as fasteners for tubing shipping crates. The licensee also addressed NRC Information Notice 2007 37, "Buildup of Deposits in Steam Generator," concerning fatigue of a low

row u-bend at a foreign unit as a result of deposit build up and lack of support for the low row u-bend. Engineering Change Package NECP 800071703 specified that this type of incident was precluded in the replacement steam generators by virtue of anti-vibration bar supports extending to the low row u-bends. Steam Generator Degradation Assessment 51-9176667-001 documented that this type of problem reflected an advanced stage of deposit accumulation that was not anticipated for the foreseeable future in the SONGS replacement steam generators.

7.0 Packing, Shipping, Handling, and Receipt Inspection (Charter Item 7)

a. Inspection Scope

The team interviewed licensee personnel involved with the packing, shipping, handling, and receipt inspection of the replacement steam generators. In addition, the team reviewed SCE receipt acceptance criteria to assess if critical attributes were appropriately specified and if the licensee had the ability to assess acceptability of meeting those acceptance criteria. The team reviewed evaluations associated with supplier deviation reports, nuclear notifications and changes to handling specifications. With respect to replacement steam generators the team focused on differences in SONGS shipping, handling, and receipt acceptance between the Unit 2 and 3 steam generators from the manufacturing site in Japan to final installation on site.

b. Observations and Findings

No findings were identified.

The team identified three unresolved items for which additional information is required to determine if performance deficiencies exist or if the issues constitute violations of NRC requirements.

(1) Introduction: The team identified an unresolved item associated with Unit 3 steam generators not shipped in accordance with specification SO23-617-01, "Design and Fabrication of Replacement Steam Generators for Units 2 and 3" (title does not match Documents Reviewed section – please check other titles for your sections) and requirements for handling, storage, and shipping. Specifically, ANSI N45.2-1977, "Quality Assurance Program Requirements for Nuclear Facilities," required a special protective environment for handling, storage, and shipping of the replacement steam generators. However, because of schedule changes, the Unit 3 protective environment which included maintaining a nitrogen pressure and a monitoring plan was altered significantly.

Description: The team evaluated specifications associated with the shipping and handling of the Unit 2 and 3 replacement steam generators. Based on the information evaluated by the team, the steam generators procurement and shipping specifications required monitoring and maintenance of nitrogen atmosphere inside the replacement steam generators during shipment. Supplier Deviation Request SDR 10041870-09091 dated December 1, 2009, documents a request "not to control the positive pressure, the dew point of nitrogen, and the oxygen content on the

primary and secondary side of the Unit 3 replacement steam generators to accelerate delivery schedule."

Specification SO23-617-01, "Design and Fabrication of Replacement Steam Generators for Units 2 and 3," Revision 4, Section 3.16.3, specifies the supplier shall be responsible for monitoring and maintaining nitrogen atmosphere inside the steam generators during their shipping from Mitsubishi to the California port discharge point. The team noted that Unit 3 steam generators did not require, monitoring or control of dew point, oxygen concentration, inside nitrogen pressure. The team could not identify if this was properly evaluated (Reference Section 5 of shipping and handling procedure SO23-617-1-M1350).

Additional review and follow up will be required to review the evaluations and corrective actions associated with the maintaining the Unit 3 replacement steam generators protective environment during shipping and then determine whether this issue represents a performance deficiency or constitutes a violation of NRC requirements. This issue is identified as URI 05000362/2012007-05, "Shipping Requirements not in Accordance to Industry Standards."

(2) Introduction: The team identified an unresolved item associated with the shipping and handling specifications requiring methods of tube bundle support. The team could not determine if this requirement to provide a tube bundle support method was adequately evaluated by SCE.

Description: Based on the information gathered by the team on shipping and handling specifications associated with the Unit 2 and 3 replacement steam generators, the team could not determine that Mitsubishi or SCE adequately considered the potential impact of not providing methods of tube bundle supports as required in SO23-617-01, "Design and Fabrication of Replacement Steam Generators for Units 2 and 3." In response to the team questions regarding tube bundle support methods the team was provided with results from Procedure L5-04GA069, "Sagging Measurement Procedure," Revision 7. However the team noted the procedure is considered a non-quality affecting procedure and used for reference only.

Additional review and follow up will be required to review the evaluations associated with the requirements to provide tube bundle support during shipping for the Unit 2 and 3 steam generators and then determine whether this issue represents a performance deficiency or constitutes a violation of NRC requirements. This issue is identified as URI 05000362/2012007-06, "Shipping Requirements not in Accordance to Design and Fabrication Specifications."

(3) Introduction: The team identified an unresolved item associated with evaluation of excessive shipping induced forces of Unit 3 replacement steam generator 3E-088.

Description: The team reviewed the SG shipping accelerometer data reports for both Unit 2 and Unit 3. In addition, the team also reviewed shipping and handling records and identified the following:

- Different transoceanic shipping companies and ships were used (U2: Happy Ranger, U3: Enchanter)
- During the discharge from the ship Unit 3 replacement steam generator 3E0-88 (3B) recorded simultaneous signals on the three attached accelerometers
- Unit 3 steam generator 3E0-88 was the only steam generator to record simultaneous signals on the three attached accelerometers
- Unit 3 steam generators received significantly more accelerometers hits compared to Unit 2

Unit 3 replacement steam generator 3E0-88 accelerometers indicated up to a 1.23 g spike with a simultaneous recording on all three of the attached accelerometers. Mitsubishi provided an evaluation of the forces which showed loads were within allowable stress limits but exceeded stress for an operating basis earthquake. The team was not able to determine if this was properly considered.

Additional review by the NRC is required to fully assess if the shipping forces contributed to the tube-to-tube wear in Unit 3 and then determine whether this issue represents a performance deficiency or constitutes a violation of NRC requirements. This issue is identified as URI 05000362/2012007-07, "Unit 3 Steam Generator 3E-088 Stresses Related to Handling."

8.0 Thermal-hydraulic and Flow Induced Vibration Modeling (Charter Item 8)

a. Inspection Scope

The team conducted and overall review of Mitsubishi thermal-hydraulic design documents and drawings used in the manufacture of the Units 2 and 3 steam generators. The team developed an independent ATHOS model to run simulations for various operating conditions to assess thermal-hydraulic phenomena in the steam generators and assess differences in key parameters based on changing operating conditions. The objective of the modeling was to understand the interactions of the key parameters to compare ATHOS modeling results to the degradation trends found during the eddy current inspections.
The team was not able to perform any independent tube vibration analysis because the NRC does not have the associated vibration software programs. However, since two key outputs of the thermal-hydraulic code are inputs to the vibration model, the ATHOS model results for fluid velocity and void fraction were used to predict increases or decreases in vibration forces and amplitude.

b. Observations and Findings

No findings were identified.

The team identified one unresolved item for which additional information is required to determine if a performance deficiency exists or if the issue constitutes a violation of NRC requirements.

(1) Introduction: The team identified an unresolved item associated with the adequacy of Mitsubishi's FIT-III thermal-hydraulic code. The FIT-III code predicted non-conservative low velocity and low void fraction results which were used as inputs to the vibration code FIVATS. These non-conservative thermal-hydraulic results lead Mitsubishi to conclude that margins to instability were significantly larger than they actually were.

Description: Replacement steam generators were designed and manufactured in accordance with SONGS Design Specification SO23-617-1, "Conformed Specification for Design and Fabrication of Replacement Steam Generators for Unit 2 and Unit 3," Revision 4 and ASME Section III, "Rules for Construction of Nuclear Facility Components". The replacement steam generators had enhanced materials and maintenance.

The tube bundle, comprised of 9727 u-tubes, is supported by a set of seven tube support plates which are maintained and spaced by a network of tie-rods. The ends of the u-tubes were welded onto the tube sheet lower face cladding and were full depth expanded in the tube sheet holes. The u-bends are supported by a set of 6 anti-vibration bars, having a maximum of 12 contact points, in the center of the bundle. For shorter tubes near the periphery, a fewer number of anti-vibration bars are present.

One of the major enhancements of the replacement steam generators was the use of Alloy-690 tubing versus Alloy-600 for corrosion resistance. Alloy-690 has lower heat conductivity so, to achieve same power, the heat transfer surface area must be increased by at least 10 percent. This required more tubes to be used in the replacement steam generators. The increased number of tubes resulted in a more tightly compacted tube bundle and elimination of the stay cylinder. The increase in the number of tubes could lead to increases in primary reactor coolant flow through the steam generators. Orifices were installed in the steam generator inlet nozzles to ensure maximum allowed primary system flowrates were not exceeded.

The tube layout indexing or incrementation used in these generators was smaller than other replacement steam generator designs. The tighter indexing results in smaller pitch/diameter ratio in critical regions of the tube bundle u-bends. In addition, it was noted that the anti-vibration bar support structure is not connected to the wrapper for lateral or vertical support; instead the anti-vibration bar system structure is only supported vertically by resting on the tubes.

Other operational and physical comparisons of the replacement steam generators and original steam generators were reviewed by the team and no significant differences were noted.

Additional review by the NRC is required to fully assess the adequacy of Mitsubishi's FIT-III thermal-hydraulic code and then determine whether this issue represents a performance deficiency or constitutes a violation of NRC requirements. This issue is identified as URI 05000362/2012007-08, "Non-Conservative Thermal-Hydraulic Model Results."

8.1 Thermal-hydraulic Assessments

The replacement steam generators thermal hydraulic operation and responses were based on the steam generator design geometric characteristics and operating parameters of the reactor coolant flow and temperature and the secondary feedwater flow and temperature. Calculations were performed for 0 to 100 percent power, beginning-of-life and end-of-life conditions considering limiting tube plugging and fouling. The important actual operating parameters selected for use in the model were saturation pressure, circulation ratio, steam flowrate, tube and shell side pressure drops, water and steam inventories, and global heat transfer coefficient.

Mitsubishi used the SSPC (Steady State Performance Calculation) code to compute these operational parameters, as described in Mitsubishi Document L5-04GA510, "Thermal and Hydraulic Parametric Calculations," Revision 5. The FIT-III code was used to determine thermal-hydraulic fluid flow conditions, with the results described in Mitsubishi Document L5-04GA521, "3D Thermal and Hydraulic Analysis," Revision 3. The FIVATS code was used to compute tube stability ratios that are used to predict tube vibration, with results described in Mitsubishi Document L5-04GA504 "Evaluation of Tube Vibration," Revision 3. In addition, the ABAQUS code was used compute stress and natural vibration frequency, and a code called IVHET was used for tube wear analysis. The key design code for tube bundle design and vibration analysis is thermal-hydraulic code FIT-III since it

computes the two key parameters (fluid velocity and density[1]) that are the primary contributors to the onset of fluid-elastic instability, which indicates the potential for excessive tube vibration.

The Mitsubishi acceptance criterion for vibration was to avoid fluid-elastic instability of tube spans by keeping the calculated stability ratios less than 1. Mitsubishi used the approach given in the ASME code Section III, Division 1, Appendix N-1330, "Flow-Induced Vibration of Tubes and Tube Banks," to calculate stability ratios and they also avoided natural frequencies of the tubes similar to the reactor coolant pump dynamic frequencies.

Design specific flow induced vibration analysis was performed for select U-bend tubes exposed to the greatest vibration risk, generally those with longest unsupported length under most limiting operating condition (lowest steam pressure, end of life design conditions). The phenomenon of fluid-elastic instability of tubes is characterized by cross-flow velocity (for out-of-plane mode) and normal velocity (for in-plane mode) where the local velocities exceed a critical velocity value (given via Conners' Equation[2]). The parameter of local velocity divided by critical velocity is referred to as stability ratio. The accuracy of calculating fluid-elastic instability is limited based on inputs that are best determined by design-specific mockup test data. Mitsubishi did not perform design-specific mockup tests, but used generally accepted test data, and other data based on Mitsubishi test rigs that were not specific to the SONGS replacement steam generator design.

If operating velocities reach this critical value, vibration amplitudes can increase rapidly and fluid-elastic instability forces can lead to rapid pulsation and damaging of tubes. The U-bend region is most susceptible because (1) the local fluid has a higher void fraction, with high velocities; (2) the fluid flow is in a direction normal to the tube, and (3) the anti-vibration bars are limited in their dampening capability along the plane of the tubes. Traditional design of anti-vibration bar systems have not considered in-plane fluid forces since it was accepted that the rigidity and dampening strength of the tube in this direction was adequate to preclude it. This event at SONGS is the first US operating fleet experience of in-plane fluid-elastic instability, sufficient to cause tube-to-tube contact and wear in the U-bend region.

The team noted that Design Specification SO23-617-1, "Conformed Specification for Design and Fabrication of Replacement Steam Generators for Unit 2 and Unit 3," Revision 4, did not address specific criteria for stability ratio and does not mention fluid-elastic instability. The team did find that the Mitsubishi calculated design values for stability ratios did not exceed 0.5. It is important to note, that each steam generator manufacturer has different design values for maximum stability ratios; therefore there is no standard value. The smaller that the design stability ratio is (has to be less than 1), the more margin to fluid-elastic instability.

---

[1] Void fractions and density are inversely proportional.

[2] Fluidelastic Vibration of Heat Exchanger Tube Arrays, Journal of Mechanical design – Volume 100 – April 1978, H.J. Connors, JR.

Mitsubishi computed the flow-induced vibration status of the steam generators in Document L5-04GA504, "Evaluation of Tube Vibration," Revision 3. The critical flow velocity, Uc, was obtained using the Connors' Equation based on output fluid velocities and densities from their FIT-III thermal-hydraulic model. The critical flow velocity is then calculated based on damping ratio, tube mass, tube outside diameter, averaged local cross flow gap velocity, and fluid density per selected tube. The method is based on formulations given in the ASME code Section III, Division 1, Appendix N-1330, "Fluid Elastic Instability". The ratio of normal-to-tube cross flow gap velocity to this critical velocity defines the "stability ratio".

Steam generator vendors must develop specific methods based on the thermal-hydraulic code selected and experimental data used to determine coefficients in the Conners' Equation for their particular steam generator design. The experimental data used justify the methods can be developed from in-house tests or taken from published industry data. Mitsubishi indicated that in their methodology two conservatisms were used in their bundle vibration analysis: (1) FIT-III gap velocities were averaged and multiplied by 1.5 and (2) one of 12 anti-vibration bars contacts were assumed to be inactive. The team noted that in Mitsubishi Document L5-04GA504, "Evaluation of Tube Vibration," Revision 3, the 1.5 multiplier was not an added conservatism but a requirement, needed to match test data results.

The team developed an independent model of the new steam generators using the ATHOS thermal hydraulic code[3]. The calculations were intended to assess operating cycle differences between Units 2 and 3 steam generators and review thermal hydraulic phenomena within the steam generators in order to investigate key parameters and causal factors for the excessive tube wear rates. The NRC ATHOS calculations determined that the differences in primary inlet temperature and steam flow between the units were negligible. NRC ATHOS results indicated high void fractions and high u-bend gap velocities existed in the bundle as compared to Mitsubishi FIT-III analyses used for design.

Mitsubishi provided a comparison of their ATHOS model to their FIT-III model results. The Mitsubishi ATHOS model fluid velocities were 2.5 to 3 times higher than the FIT-III model velocities with the 1.5 multiplier applied. Other independent code calculations, including an analysis by Westinghouse using their in-house modified version of ATHOS and an analysis by AREVA using their French code CAFCA4 showed similar thermal-hydraulic results (up to 4 times higher velocities than FIT-III) as those computed in the Mitsubishi ATHOS results and the NRC independent ATHOS calculations. Based on these comparisons, it was concluded that the FIT-III code and model results used for design were non-conservative even with the multiplier applied.

Most of the experimental work in fluid-elastic instability has been carried out for two-phase flow, with an air-water medium. Accepted industry data, as presented by the Mitsubishi, shows that in staggered array bundles (triangular pitch, pitch/diameter

---

[3] ATHOS3/SGAP Version 3.0-S: A Computer Program for Thermal-Hydraulic Analysis of Steam Generators, February 2005 **(need to verify this is the version that the NRC has a license for use. Did Carl re-run the ATHOS model using newest version and did it change our results?)**

=1.33), the onset of tube instability for modern steam generators, such as SONGS steam generators, can start at tube gap velocities above 6 meter/sec (pending effectiveness of the dampening structure) (please add reference for this statement). The NRC ATHOS model results indicated that there was a substantial localized region in the lower hot side of the u-bends where velocities exceeded 6 m/sec.

The NRC ATHOS calculations were compared to gap velocities computed both with the Mitsubishi ATHOS and the FIT-III models. Since tube R142C88 was the only one common for each of the analyses, it can be used as basis for comparison. The effective peak velocities were as follows:

- NRC ATHOS – 5.2 m/sec
- Mitsubishi ATHOS – 5.6 m/sec
- Mitsubishi FIT-III – 2.5 m/sec

Both the NRC and Mitsubishi ATHOS results were reasonably consistent and strongly suggested that high velocities coupled with high void fraction were primary causal factors in the tube fluid-elastic instability and the excessive wear patterns observed in the Unit 3 steam generators.

The team reviewed the verification and validation of both the Mitsubishi FIT-III thermal-hydraulic and FIVATS tube vibration models as stated in Specification SO23-617-1, Revision 4. The specification required Mitsubishi to design and build the steam generators in accordance with ASME NQA-1, "Quality Assurance Requirements for Nuclear Facility Applications," 1994, Subpart 2.7 "Computer Software" and Mitsubishi's quality assurance program.

The team reviewed Mitsubishi's verification and validation Report KAS-20050201, "FIT-III Code Validation Report," Revision 2. The report concluded the FIT-III code was valid for prediction of velocity and density behavior of two-phase flow under nominal conditions for the secondary side of PWR steam generators.

The team reviewed Mitsubishi's verification and validation Report KAS-20040253, "FIVATS Code Validation and Qualification Report," Revision 3. The FIVATS model was designed to calculate the stability ratios by using the flow velocity and density distributions from the FIT-III model. The FIVATS model primarily used the Conners' Equation, and validation was performed mainly by comparison to hand calculation; however, Mitsubishi used a mock-up test facility with a simple anti-vibration bar structure as part of their validation effort. The report concluded that adequate validation and qualification was performed to show compliance to software requirements and that the code could predict flow-induced vibration.

The team requested additional information as part of the verification and validation of the FIT-III thermal-hydraulic model. Mitsubishi provided several additional reports. One of the reports showed benchmarking comparisons to a French test facility program called CLOTAIRE in 1986. Another report conducted in 2002, showed comparisons between FIT-III and ATHOS, and concluded that both codes had good correlation with the CLOTAIRE experimental data. Because of the limited

information provided, the team could not determine the validity of the benchmarking of FIT-III.

Overall, the team determined that the validation and verification of the FIT-III code did not present overwhelming evidence that this code has been adequately benchmarked. The team did not find any problems with the validation of the FIVATS code.

8.2 NRC ATHOS Results

Figures 1 through 4 (different view angles of same results) show results, with low $T_{hot}$ and low steam pressure and present a 3D isometric encapsulation of steam qualities (red scale) at and above 0.9 (i.e., void fraction > 0.99) and field velocities at and above 6.0 m/sec (white scale).

The ATHOS model results of high steam quality and steam velocity closely align with the area of concern (tube-to-tube wear) in the Unit 3 replacement steam generators. In Figure 5, the code predicted regions of high void fraction and high steam velocities (vertically located z-axis cut at about 20 inches above the 7$^{th}$ TSP) are superimposed with tube-to-tube wear indications from Unit 3 steam generator 3E0-88.

The tube-to-tube wear indications align with anti-vibration bar wear indication trends; however, the anti-vibration bar wear patterns appear to indicate a more square-like, essentially rectangular behavior that suggests that there may also be a mechanical, fabrication, assembly, and/or material contribution to the tube-to-tube wear degradation.

**Figure 1**

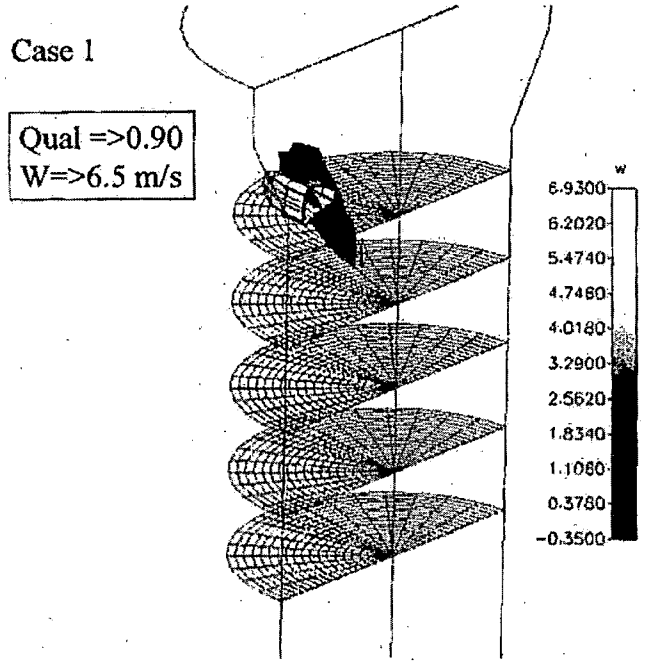


**Figure 2**

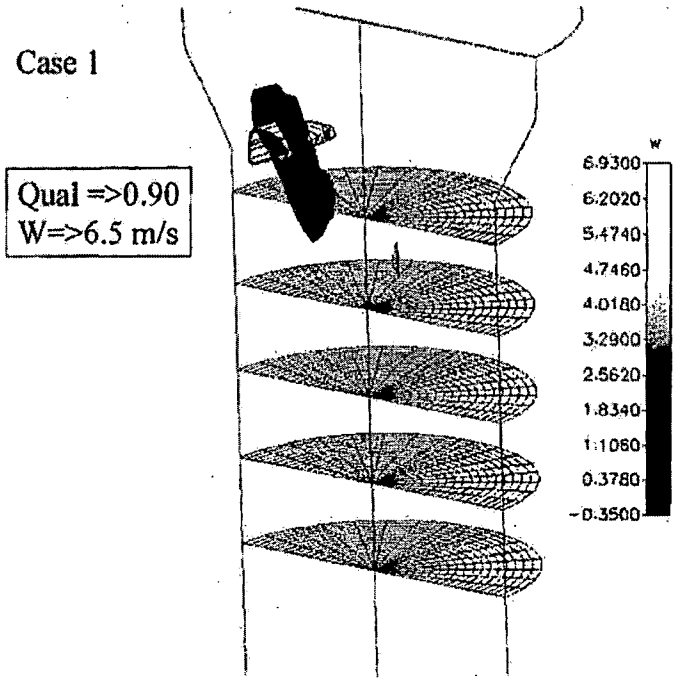

**Figure 3**

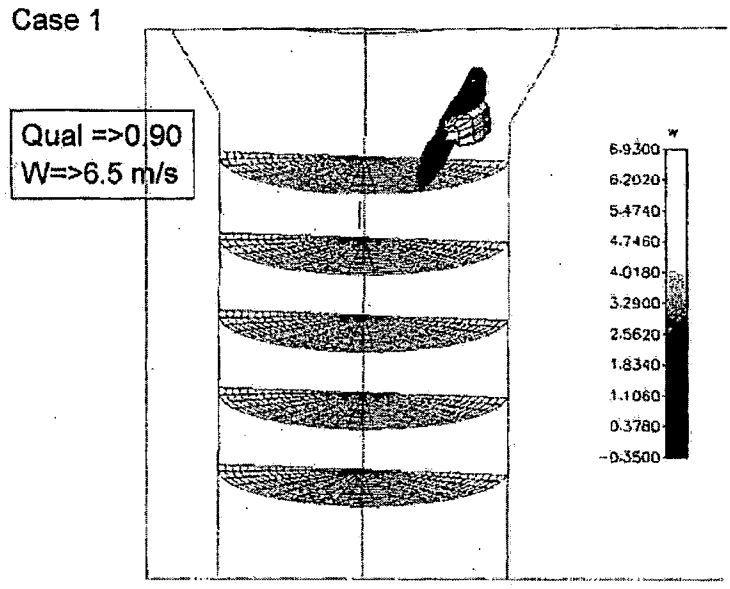


**Figure 4**

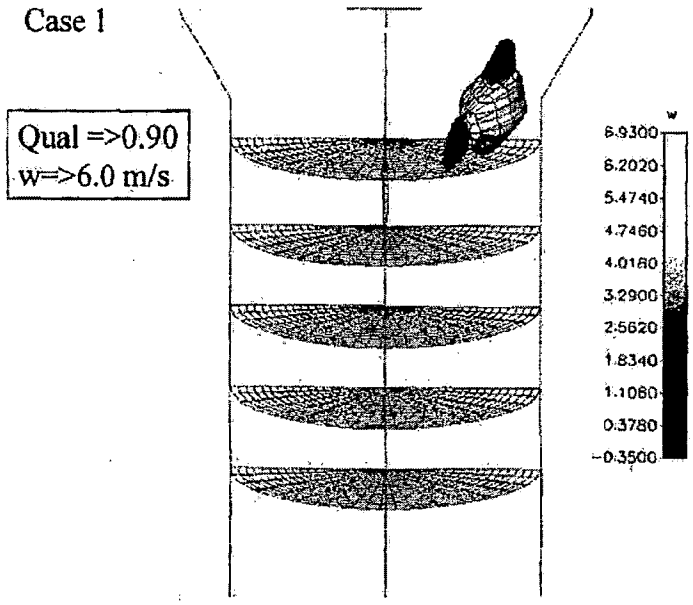

**Figure 5**

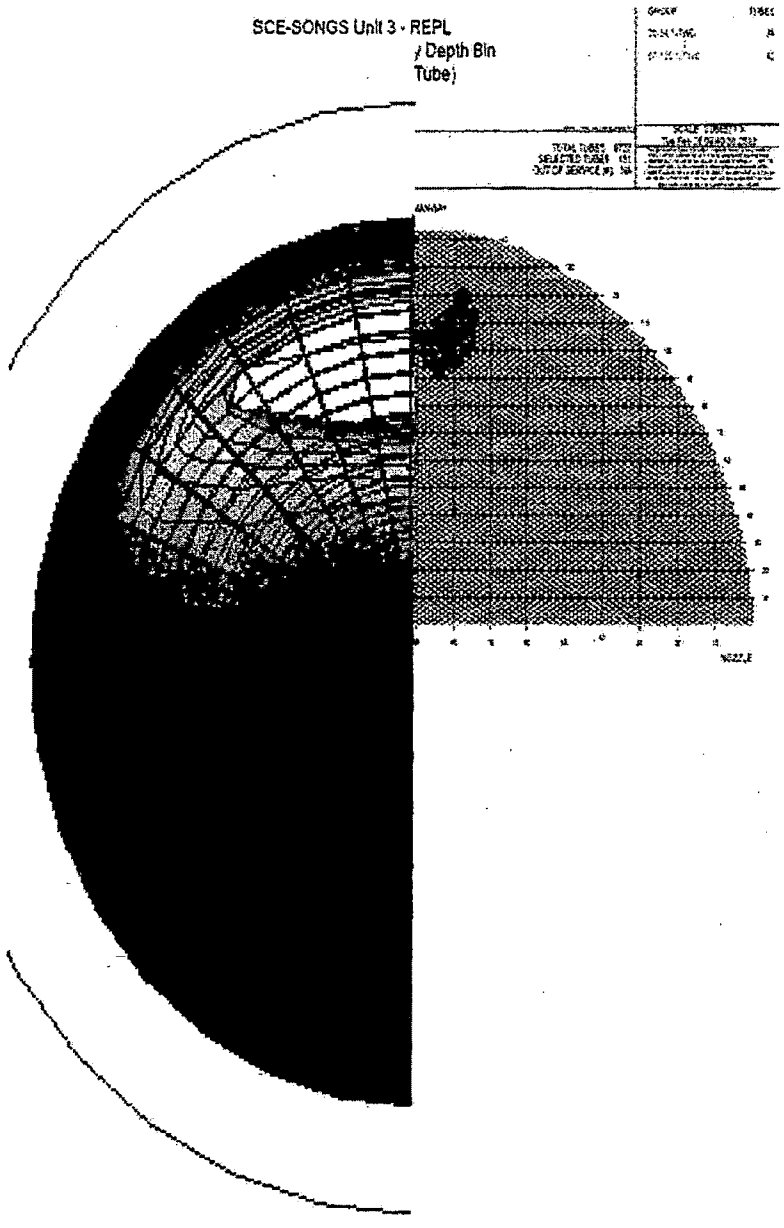


The NRC analysis indicated a correlation with the tube-to-tube wear based on a combination of high void fraction and high steam velocities. It should be noted that

the traditional forcing function, fluid velocity squared times density, does not show good agreement with the tube-to-tube wear patterns. This indicated that the high quality steam fluid velocities and high void fraction may be sufficiently high to cause conditions in the generators conducive for onset of fluid-elastic instability.

The above analyses apply equally to Units 2 and 3, so it does not explain why the accelerated fluid-elastic instability wear damage was significantly greater in Unit 3 steam generators. The ATHOS thermal-hydraulic model predicts bulk fluid behavior based on first principals and empirical correlations and as a result it is not able to evaluate mechanical, fabrication, or structural material differences or other phenomena that may be unique to each steam generator. Therefore this analysis cannot account for these mechanical factors and differences which could very likely also be contributing to the tube degradation.

8.3 Conclusion

Based on independent NRC thermal-hydraulic analysis, the team concluded that the SONGS replacement steam generators were not designed with adequate margin to preclude the onset of fluid-elastic instability. Therefore unless changes are made to the operation or configuration of the steam generators, high fluid velocities and high void fractions in localized regions in the u-bend will continue to cause excessive tube wear and accelerated wear that could result in tube leakage and/or tube rupture. The deficiencies appear to be related to Mitsubishi's FIT-III thermal hydraulic code having predicted non-conservative low velocity results and low void fractions. These results lead Mitsubishi to conclude that margins to instability were significantly larger than they actually are. This assessment is based on eddy current data, NRC ATHOS analysis, Mitsubishi ATHOS analysis, and other thermal-hydraulic analyses completed by Westinghouse and AREVA that all identified significantly higher fluid velocities and void fractions than FIT-III.

Based on the cause evaluation and corrective action plan, SCE determined that the best solution to prevent tube-to-tube wear was to conservatively plug and stabilize the affected areas. By taking the impacted tubes out-of-service, SCE determined that this should reduce the potential for localized fluid velocities reaching critical velocity. In addition, in order to ensure sufficient margin to preclude the onset of fluid-elastic instability, SCE determined that reactor power would also have to be reduced. At this time SCE is still developing additional corrective actions to prevent tube-to-tube wear. The actions have not been finalized and no determination has been made concerning the appropriate power level. The NRC has not made any conclusions on the proposed corrective actions. Once the corrective actions have been finalized, they will be reviewed and evaluated as part of the Confirmatory Action Letter followup inspection.

9.0 Risk Assessment (Charter Item 9)

a. Inspection Scope

The team reviewed the steam generator tube leak and failures of multiple steam generator tubes during in-situ pressure testing to support an assessment of the risk of the degraded steam generator tubes during various accident conditions, including a main steam line break accident.

b. Observations and Findings

No findings were identified.

An NRC senior reactor analyst is currently working with SCE risk assessment personnel to determine the risk associated with the loss of tube integrity for multiple tubes.

10.0 Assess Quality Assurance, Radiological Controls, and Safety Culture Components (Charter Item 10)

a. Inspection Scope

The team reviewed the event, operator actions, management decisions, steam generator eddy current examinations, in-situ pressure testing, and tube plugging and stabilization activities to determine whether issues related to quality assurance, radiological controls, or safety culture existed.

b. Observations and Findings

No findings were identified.

Region IV radiation protection inspectors reviewed the estimated offsite radiation exposure from the actual steam generator tube leak on Unit 3 steam generator 3E0-88 that occurred on January 31, 2012, including the potential dose consequence to site workers and members of the public. The licensee determined that the Unit 3 steam generator tube leak resulted in a release of gaseous effluents into the public domain, and the primary radionuclides released were argon-41, xenon-133, and xenon-135. The release resulted in an estimated 0.0000452 (4.52 E-5) mrem dose to the public. Inspectors also reviewed design drawings and radiation monitor data, performed plants tours, and confirmed the licensee's use of the offsite dose calculation methodology. The inspectors concluded that the Unit 3 steam generator tube leak was detected by the condenser steam jet air ejector radiation monitor 3RT-7820 as per design. In addition, the radiation monitor 3RT-7820 alarmed and alerted SONGS operators of the steam generator tube leak as required.

11.0 Operational impacts from Unit 3 to Unit 2 (Charter Item 11)

a. Inspection Scope

As follow-on of the previous sections, the team reviewed collections of the Mitsubishi documents and presentations, licensee documents and presentations, and NRC independent analysis and assessments to consider the operational impact on Unit 2 based on analysis and data, including eddy current results, regarding the as-found condition of Unit 3. The team compared key observations and overall differences in operational parameters that are common to both units that could affect and possibly limit Unit 2 operation. The team focused on differences in fabrication, manufacturing, operation, and eddy current data results between Units 2 and 3 steam generators.

b. Observations and Findings

No findings were identified.

Based on the review of current Cycle 16 operating data and independent NRC analysis it does not appear that there were any major difference in the thermal hydraulic phenomena at normal full power operation. Since generator physical dimensions and design are identical, the operational parameters are basically the same between the Unit 2 and 3 steam generators; therefore, the hydraulic forcing function that caused tube-to-tube wear and accelerated anti-vibration bar and tube support plate wear should also be same. The initial inspections of the Unit 2 steam generators did not indicate significant wear except at the retainer bars (different mechanism caused this wear). However, subsequent follow up inspections in Unit 2 with a more sensitive probe confirmed the existence of minor tube-to-tube wear in two neighboring tubes but in one of the steam generators. The tube-to-tube wear that was found in Unit 2 was in a similar location as that found in both of the Unit 3 steam generators.

The phenomenon of fluid-elastic instability is a function primarily of two criteria: the fluid velocity forces and the damping capability of the support structure (i.e., the tube support plates, the tubesheet, and the anti-vibration bars). Therefore, if it is determined that the thermal hydraulic forces in the bundle are the same, it can be concluded that the damping forces between the Unit 2 and Unit 3 replacement steam generators must be different. Mitsubishi performed several studies that indicated that gap contact forces in the anti-vibration bars were greater in Unit 2 than in Unit 3. However, with the exception of manufacturing data that shows slight differences, there is not currently a method available to measure the clearances between the anti-vibration bars and the tubes; however, SCE is currently working with AREVA to develop a method to take these measurements.

The tube damage found in Unit 3 is markedly more severe than Unit 2, especially considering that Unit 3 operated only about half the amount of time as Unit 2. This suggests that there is indeed a sizeable difference in the damping capability of the unit steam generators.

There are generally two options to arrest localized damaging thermal hydraulic phenomena in steam generators. The first and preferred option is to plug tubes in the

affected area. The collective plugging tends to relocate and reduce high fluid velocities and void fractions, and has on previous occasions in industry been successful. However, if plugging selected tubes does not provide significant margins adequate to arrest the damage mechanism, thermal hydraulic conditions can be reduced through a reduction in power. Reducing power has several beneficial effects including (1) tends to increase steam pressure, (2) reduces high steam fluid velocities and high void fraction in the bundle, and (3) improves damping. Currently, SCE is still reviewing and developing additional corrective actions to preclude fluid-elastic instability. The NRC has been observing some of the mockup testing being used to qualify additional repair activities.

12.0. Mitsubishi Divider Plate Manufacturing and Weld Issues (Mitsubishi Charter Item 2)

a. Inspection Scope

On March 18, 2009, Mitsubishi identified cracking indications in the weld between the divider plate and the channel head of Unit 3 replacement steam generator 3E0-88 (see figure below), after completion of the ASME Section III hydrostatic test on the secondary side. The extent of condition investigation also identified similar cracking indications in Unit 3 replacement steam generator 3E0-89. As discussed in Section 4 of this report, the cause of the cracking was attributed to the air carbon-arc gouging process used to remove the clad weld from the channel head. The team reviewed information associated with the repair of the cracking indications to assess whether the repair activities resulted in relevant differences in design and fabrication that could be considered as contributing factors for the cause of the tube-to-tube wear issue in Unit 3.

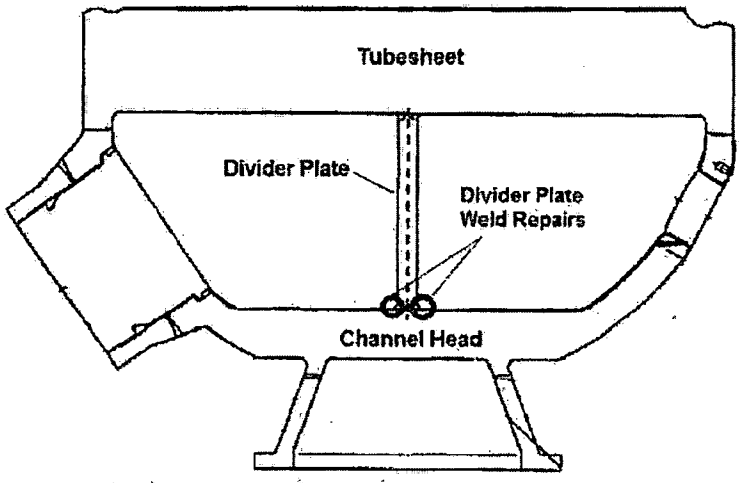


Location of Divider Plate Weld Repairs in Unit 3 Steam Generators (For Illustration Purposes Only)

b. Observations and Findings

No findings were identified.

The team identified an unresolved item for which additional information is required to determine if a performance deficiency exists or if the issue constitutes violation of NRC requirements. The team also identified several observations related to the divider plate weld repairs in Unit 3 replacement steam generators.

1) Introduction: The team identified an Unresolved Item associated with the adequacy of evaluation and controls for the divider plate weld repairs.

Description: The cracking of the divider plate weld in both Unit 3 replacement steam generators required extensive repairs affecting the channel head, divider plate, and tubesheet. Based on interviews with licensee personnel and the review of documentation for the repairs, the team determined that Mitsubishi did not perform a comprehensive evaluation to assess the impact of the divider plate repairs on the integrity of the tube bundle. The team determined that the areas listed below were not considered or evaluated in sufficient depth to identify the potential adverse effects of the planned weld repairs.

- Additional Rotations – The repair activities for the Unit 3 steam generators required additional rotations of the steam generator assembly while these were oriented in the horizontal position. The repairs resulted in approximately 300 additional rotations in each steam generator, which could have affected the configuration of the tube bundle in terms of anti-vibration bar gaps or distortion. The team identified that Mitsubishi did not fully evaluate the impact of additional rotations on the configuration of the steam generators since rotation was considered a normal evolution in the fabrication process.

- Heat Input – The repair process included extensive heat-adding activities such as grinding, flame cutting, and post-weld heat treatment. While these activities were performed in accordance with the construction code of record and an approved repair plan, they could have resulted in thermal expansion and unintended distortion of steam generator components. For example, the channel heads were removed using flame cutting and Mitsubishi's evaluation for the impact of this activity was limited to the base material area in the vicinity of the cut, i.e. the heat affected zone. Mitsubishi did not fully assess the impact this activity could have on the overall configuration of the steam generator in terms of thermal expansion of the tubesheet or distortion.

- Dimensional Checks after Repair – The team identified that Mitsubishi did not perform dimensional verifications (e.g. clearances) of the tube bundle or other secondary side dimensions after the repairs of the Unit 3 steam generators to confirm that critical dimensions were not affected by the repairs.

Additional review by the NRC is required following completion of the licensee's cause evaluation to fully assess how the repair activities affected the Unit 3 replacement steam generators and then determine whether this issue represents a performance

deficiency or constitutes a violation of NRC requirements. This issue is identified as URI 05000362/2012007-09, "Evaluation of the Effects of Divider Plate Weld Repairs in Unit 3 Replacement Steam Generators."

2) Repair Plan: The team noted that Mitsubishi developed a specific plan to conduct the repair of the divider plate weld in both Unit 3 replacement steam generators. The repair plan adequately described the major repair steps and the required implementing procedures. For some of the repair stages, the licensee developed new procedures to prescribe activities outside the normal fabrication sequence. The repair plan consisted of the following major steps:

- Cutting off the divider plate from the tubesheet by grinding
- Cutting off the channel head from the tubesheet by flame cutting
- Cutting the divider plate from the channel head by grinding
- Removal of the heat affected zone of the channel head bowl edge due to flame cutting
- Application of weld buildup and post-weld heat treatment on the channel head bowl edge
- Application of low alloy steel buildup and Alloy 690 butter on the bottom of the channel head for divider plate welding, including required post-weld heat treatment
- Application of Alloy 690 buildup on the divider plate, including required post-weld heat treatment
- Welding divider plate to channel head
- Welding the divider plate to the tubesheet
- Welding the channel head to the tubesheet
- Primary side hydrostatic test

3) Differences between Replacement Steam Generators: The team identified the notable differences listed below between Unit 2 and Unit 3 replacement steam generators as a result of the divider plate weld repair activities.

- Material Class for the Tubesheets – The tubesheet material for both Unit 3 replacement steam generators was reclassified to facilitate the additional post-weld heat treatment required for the repair of the divider plate welds. The tubesheet manufacturer originally certified that the tubesheet material met the requirements of ASME specification SA-508/Grade 3/Class 2, with a post-weld heat treatment time of approximately 15 hours. The repair activities in Unit 3 required additional post-weld heat treatment, which was expected to affect the properties of the tubesheet material to the extent that the mechanical properties would not meet the requirements for SA-508/Grade 3/Class 2 material. Mitsubishi performed mechanical testing on a specimen fabricated from the archive samples that was exposed to 30 hours of post-weld heat treatment and the tests showed that the tubesheet material's tensile strength did not meet the ASME specifications for SA-508/Grade 3/Class 2 material. Mitsubishi performed a reconciliation review to reclassify the material to SA-508/Grade 3/Class 1,

which has a lower tensile strength. The reconciliation included an evaluation of resulting stresses on the tubesheet under design, upset, emergency, faulted, and test conditions using the material properties for SA-508/Class 1 material. The evaluation resulted in acceptable stresses based on the stress limits imposed by the construction code of record. This issue was evaluated by Mitsubishi in the non-conformance report process and Supplier Deviation Request SDR-086 10041870-09086 was submitted to the licensee for review and approval. The licensee approved the reclassification of the tubesheet material.

- Minimum Thickness of the Channel Head Base Metal – The channel heads of both Unit 3 steam generators were removed by flame cutting to facilitate the divider plate weld repairs. The removal and final welding of the channel head resulted in a reduction of the minimum wall thickness of the channel head base metal. The minimum base metal thickness was reduced by 1.18-inches. Mitsubishi evaluated this change in the "Design Report for the Channel Head Region." The reduction in minimum wall thickness was addressed through a reconciliation of stress ratios based on the stress limits imposed by the construction code of record. The analysis demonstrated the structural adequacy of the channel head, primary inlet nozzle, primary outlet nozzle, primary manway, support skirt, and the stud bolts of the primary manway.

- Number of Bolts in the Divider Plate Patch Plates – The original design of the replacement steam generators included a patch plate held in place at the upper corners of the divider plate by three bolts. As a result of the divider plate-to-tubesheet weld removal to support the repair activities, the Unit 3 divider plate patch plates were modified to be held by two bolts instead of the three bolts specified in the original design. Mitsubishi submitted this design change to the licensee for review and approval. Licensee personnel approved the design change as requested.

- Weld Buildup on Channel Head Surfaces – Since the repair of the divider plate welds in Unit 3 steam generators required cutting of the channel head, weld buildup had to be applied on the affected surfaces in order to restore the dimensions to design specifications. Mitsubishi submitted this design change to the licensee for review and approval. Licensee personnel approved the design change as requested.

- Post Weld Heat Treatment – The tubesheet-to-channel head weld area experienced a total of two post-weld heat treatments. Both Unit 3 replacement steam generators received an additional local post-weld heat treatment at approximately 1103° F for approximately 3.5 hrs. Mitsubishi submitted this fabrication process change to the licensee for review and approval. Licensee personnel approved the design change as requested.

- Total of Rotations during Fabrication – The total number of rotations on each steam generator varied as a result of the hydrostatic test results and the repairs on the divider plate welds.

| Steam Generator | Initial Rotations | Additional Rotations for Divider Plate Repairs | Total Rotations |
|---|---|---|---|
| Unit 2 E0-89 | 520 | 0 | 520 |
| Unit 2 E0-88 | 510 | 0 | 510 |
| Unit 3 E0-89 | 470 | 340 | 810 |
| Unit 3 E0-88 | 440 | 320 | 760 |

13.0 Office of Nuclear Reactor Regulation (NRR) Review of SONGS 50.59 Evaluation

a. Inspection Scope

The NRR technical specialist reviewed all of the design changes associated with the replacement steam generators to determine whether the changes to the facility or procedures, as described in the updated final safety analysis report, had been reviewed and documented in accordance with 10 CFR 50.59 requirements. The technical specialist reviewed the various information used by SCE to review the changes being made to the replacement steam generators, including calculations, analyses, design change documentation, procedures, the updated final safety analysis report, the technical specifications, and plant drawings. The evaluation process used by the technical specialist included determining if the design changes to the replacement steam generators were a change to the facility or procedures as described in the updated final safety analysis report or a test or experiment not described in the updated final safety analysis report. The technical specialist also verified that safety issues related to the changes were resolved. The technical specialist compared the safety evaluations and supporting documents to the guidance and methods provided in NEI 96-07, "Guidelines for 10 CFR 50.59 Implementation," Revision 1, as endorsed by NRC Regulatory Guide 1.187, "Guidance for Implementation of 10 CFR 50.59, Changes, Tests, and Experiments," to determine the adequacy of the 10 CFR 50.59 evaluations.

b. Observations and Findings

No findings were identified

The NRR technical specialist identified one unresolved item for which additional information is required to determine if performance deficiencies exist or if the issues constitute violations of NRC requirements.

(1) Introduction: The NRR technical specialist reviewed SCE's 10 CFR 50.59 evaluation contained in Engineering Change Packages 800071702 and 800071703 for the Unit 2 and Unit 3 replacement steam generators, respectively, in which SCE determined that the impact of the replacement steam generators on the current licensing basis and any need for NRC approval as required by 10 CFR 50.59.

(2) Description: The NRR technical specialist reviewed the SCE's 10 CFR 50.59 evaluation against 10 CFR 50.59(c)(2)(viii) which requires that licensees obtain a license amendment pursuant to 10 CFR 50.90 prior to implementing a proposed change if the change would result in a departure from a method of evaluation described in the final safety analysis report (as updated) used in establishing the design bases or in the safety analyses. Industry guidance NEI 96-07, Revision 1, Section 3.10, "Methods of Evaluation," states, "Definition: Methods of evaluation means the calculational framework used for evaluating behavior or response of the facility or structures, systems, and components." Regulation 10 CFR 50.59 a(2), states, "*Departure from a method of evaluation described in the FSAR (as updated) used in establishing the design bases or in the safety analyses* means (i) changing any of the elements of the method described in the FSAR (as updated) unless the results of the analysis are conservative or essentially the same; or (ii) changing from a method described in the FSAR to another method unless that method has been approved by NRC for the intended application." Regulation 10 CFR 50.59(d)(1) requires that the licensee maintain records of changes in the facility that "includes a written evaluation which provides the bases for the determination that the change, test, or experiment does not require a license amendment...." The technical specialist evaluated SCE's bases for determining that the changes would not result in the departure from the method of evaluation used in establishing the design bases or in the safety analyses. Specifically, the technical specialist evaluated whether the changes involved:

(a) changing of any of the elements of the method described in the updated final safety analysis report, which consistent with 10 CFR 50.59 a(2)(i) would be justified by demonstrating that the results of the analysis are conservative or essentially the same; or

(b) changing from a method described in the updated final safety analysis report to another method, which consistent with 10 CFR 50.59 a(2)(ii) would be justified by demonstrating that method has been approved by NRC for the intended application.

The NRR technical specialist reviewed SCE's 10 CFR 50.59 evaluation and found two instances that failed to adequately address whether the change involved a departure of the method of evaluation described in the updated final safety analysis report.

(a) Use of ABAQUS instead of ANSYS: Updated Final Safety Analysis Report Sections 3.9.1.2.2.1.11 and 3.9.1.2.2.2.3 were revised to reflect that the SONGS Unit 2 and 3 original steam generators stress analyses for reactor coolant system structural integrity utilized the ANSYS computer program, whereas the replacement steam generators analyses utilized the ABAQUS computer program. The SCE's 50.59 evaluation incorrectly determined that using the ABAQUS instead of ANSYS was a change to an element of the method described in the updated final safety analysis report did not constitute changing from a method described in the updated final safety analysis report to another method, and as such, did not mention whether ABAQUS has been approved by

the NRC for this application.

(b) Use of ANSYS instead of STRUDL and ANSYS: Updated Final Safety Analysis Report Section 5.4.2.3.1.3 was revised to reflect that the SONGS Unit 2 and 3 evaluation of tube stress under loss of coolant accident conditions for the original steam generators consisted of a two-step process utilizing the STRUDL and ANSYS computer programs to calculate displacement histories and tube stresses, respectively, while the corresponding replacement steam generators analysis determined tube stresses from blowdown forces using only the ANSYS computer program. While SCE's 50.59 evaluation correctly considered this a change from a method described in the FSAR to another method, the 50.59 evaluation did not mention whether the method has been approved by NRC for this application.

Additional review and followup will be required to review the departure of the method of evaluation used during the stress analysis calculations associated with the replacement steam generators and then determine whether this issue represents a performance deficiency or constitutes a violation of NRC requirements. This issue is identified as URI 05000362/2012007-10, "Evaluation of Departure of Method of Evaluation for 10 CFR 50.59 Processes."

## 14.0 Exit Meeting Summary

On June 18, 2012, the NRC held a public meeting and presented the inspection results to Mr. P. Dietrich, Senior Vice President and Chief Nuclear Officer, and other members of the staff, who acknowledged the findings. Proprietary information was provided to the team and all proprietary information was returned to SCE.

**SUPPLEMENTAL INFORMATION**
**KEY POINTS OF CONTACT**

Licensee Personnel

P. Dietrich, Senior Vice President and Chief Nuclear Officer
R. Litzinger, President, SCE
D. Bauder, Vice President and Station Manager
T. Palmisano, Vice President of Engineering, Projects and Site Support
T. McCool, Plant Manager
T. Yackle, Assistant Plant Manager
D. Yarbrough, Director of Operations
R. Corbett, Director of Performance Improvement
O. Flores, Director of Nuclear Oversight
R. St Onge, Director of Nuclear Regulatory Affairs
B. Winn, Director of Nuclear Financial Management
E. Avella, Director of Project Management
M. Coveney, Director of Nuclear Leadership
M. Stevens, Title needed, Nuclear Regulatory Affairs
C. Cates, Nuclear Safety Culture and Site Recovery Manager
M. Malzahn, Project Management Engineer
C. Harberts, Steam Generator Replacement Project Manager
M. Mihalik, Senior Engineer, Project Management Organization
R. McWey, Nuclear Oversight Manager
M. Pawlaczyk, Nuclear Regulatory Affairs Technical Specialist
J. Peattie, Maintenance Manager
R. Treadway, Nuclear Regulatory Affairs Manager
B. Olech, Consulting Engineer, Edison
D. Brabec, Project Manager Steam Generator Recovery Program
D. Calhoun, Senior Engineer, Design Engineering Organization, Edison

Mitsubishi Personnel

H. Kaguchi, Mitsubishi Heavy Industries, Director, Component Designing Department
I. Otake, Mitsubishi Heavy Industries, Deputy Chief Engineer, Quality Assurance Department
T. Tsuruta, Mitsubishi Heavy Industries, Engineer, Quality Assurance Department
T. Inoue, Mitsubishi Heavy Industries, Deputy Director, Plant Designing Department
H. Hirano, Mitsubishi Heavy Industries, Project Manager, Overseas Project, Component Designing Department
R. Bywater, Mitsubishi Nuclear Energy Systems, COLA Licensing Manager
F. Gillespie,
R. Godley,

Other Contractor Personnel

R. Walker, MPR Consultant
M. Short, Consultant

Bruce ?, Areva, TITLE NEEDED
??, ATHOS Engineer, NAME AND TITLE NEEDED

Comn
contra

NRC Personnel
T. Blount, Deputy Division Director, Division of Reactor Safety
R. Lantz, Branch Chief, Projects Branch D
G. Warnick, Senior Resident Inspector

## LIST OF ITEMS OPENED, CLOSED AND DISCUSSED

Opened

| | | |
|---|---|---|
| 05000362/2012007-01 | URI | Adequacy of the Trip/Transient and Event Review Procedure (Section 1) |
| 05000362/2012007-02 | URI | Evaluation of Unit 3 Vibration and Loose Parts Monitoring System Alarms (Section 3) |
| 05000362/2012007-03 | URI | Evaluation of Retainer Bars Vibration during the Original Design of the Replacement Steam Generators (Section 4 |
| 05000362/2012007-04 | URI | Evaluation of Changes in Dimensional Controls during the Fabrication of Unit 2 and Unit 3 Replacement Steam Generators (Section 4) |
| 05000362/2012007-05 | URI | Shipping Requirements not in Accordance with Industry Standards (Section 7) |
| 05000362/2012007-06 | URI | Shipping Requirements not in Accordance with Design and Fabrication Specifications (Section 7) |
| 05000362/2012007-07 | URI | Unit 3 Steam Generator E088 Stresses Related to Handling (Section 7) |
| 05000362/2012007-08 | URI | Non-Conservative Thermal-Hydraulic Model Results (Section 8) |
| 05000362/2012007-09 | URI | Evaluation of the Effects of Divider Plate Weld Repairs in Unit 3 Replacement Steam Generators (Section 12) |
| 05000362/2012007-10 | URI | Evaluation of Departure of Method of Evaluation for 10 CFR 50.59 Processes (Section 13) |

Closed

None

Discussed

None

## LIST OF DOCUMENTS REVIEWED

AUDITS/SELF-ASSESSMENTS/QUALITY CONTROL DRAWINGS

SONGS DOCUMENTS

| Number | Title | Revision/Date |
|---|---|---|
| MHI-1-06 | Southern California Audit of Mitsubishi Heavy Industries | June 16, 2006 |
| MHI-1-09 | Southern California Audit of Mitsubishi Heavy Industries | April 27, 2009 |
| MHI-2-04 | Southern California Audit of Mitsubishi Heavy Industries | December 14, 2004 |
| SCES-007-10 | Procurement and Material Control Program Audit | September 14, 2010 |
| MHI-01-04 | Evaluation and Review of Contractor, Consultant, Utility or Licensee Audit Report | September 24, 2004 |
| | Status of Southern California Edison (SCE) Corrective Action Request (CAR) Nos. S-1918 and S-1932 Closure | March 23, 2007 |
| | Southern California Edison (SCE) Corrective Action Request (CAR) No. S-1991, Supplier Stop Work Order (SSWO) No. SSWO-001-08 | 1 |
| SO123-XV-50 | Corrective Action Program | 25 |
| | RSG-SCE/MHI-06-2233 – Southern California Edison (SCE) Corrective Action Request (CAR) No. S-1882 Closure | May 3, 2006 |
| | RSG-SCE/MHI-06-1916 - Southern California Edison (SCE) Corrective Action Request, (CAR) No. S-1906 Closure | February 22, 2006 |
| | Southern California Edison (SCE) Audit No. MHI-1-06 and Corrective Action Request (CAR) Nos. S-1915, S-1916, S-1917, and S-1918 | January 31, 2008 |
| AR# 040901345 | Qualification Letter | September 24, 2004 |

| Number | Title | Revision/Date |
|---|---|---|
| AR#050301458 | Qualification Letter | March 23, 2005 |
| AR#060500134 | Qualification Letter | May 10, 2006 |
| 6C294014 | Edison Material Supply Procurement Order for Mitsubishi Heavy Industries | September 28, 2004 |
| SO23-617-01 | Specifications for design and fabrication of RSG for Unit 2 and Unit 3 | 4 |
| SO23-617-02 | Specifications for Baseline Pre-Service Examination on Tubing for RSG | 1 |
| SO23-617-03 | Replacement Steam Generator Installation Unit 2 and 3 | 4 |
| SO23-617-04 | Specifications for the Transportation of Replacement Steam Generators | 1 |
| TL C001783 | San Onofre Topical Report Quality Assurance Manual | 64 |
| TL C001782 | San Onofre 2&3 FSAR Updated Quality Assurance Program Topical Report SCE-1 | 15 |
| | SONGS Unit 2 & 3 Replacement Steam Generator QA/QC Manufacturing Oversight Plan Japan Steel Works | 0 |
| | SONGS Unit 2 & 3 Replacement Steam Generator QA/QC Oversight Plan | 1 |
| | SONGS Unit 2 & 3 Replacement Steam Generator Receipt Inspection Plan | 0 |
| SGR-A10183 | Replacement Steam Generator Resident Oversight Plan | 1 |
| SGR-A10159 | San Onofre Nuclear Generating Station Unit 2 & 3 Steam Generator Replacement Project Plan | 1 |
| MHI-1SV-05 | Source Verification Report of MHI/Japan Steel Work | March 15, 2005 |
| MHI-1SV-06 | Source Verification Report of MHI/Japan Steel Work | February 7, 2006 |
| MHI-1SV-07 | Source Verification Report of MHI | March 20, 2007 |
| MHI-1SV-08 | Source Verification Report of MHI/Japan Steel Work | August 29, 2008 |
| MHI-2SV-05 | Source Verification Report of MHI | April 1, 2005 |

| Number | Title | Revision/Date |
|---|---|---|
| MHI-2SV-06 | Source Verification Report of MHI/Japan Steel Work | March 24, 2006 |
| MHI-2SV-07 | Source Verification Report of MHI | November 2, 2007 |
| MHI-3SV-05 | Source Verification Report of MHI/Japan Steel Work | May 3, 2005 |
| MHI-3SV-06 | Source Verification Report of MHI | May 3, 2006 |
| MHI-4SV-05 | Source Verification Report of MHI/Japan Steel Work | May 4, 2005 |
| MHI-4SV-06 | Source Verification Report of MHI/Japan Steel Work | May 23, 2006 |
| MHI-5SV-05 | Source Verification Report of MHI/Japan Steel Work | June 10, 2005 |
| MHI-5SV-06 | Source Verification Report of MHI | September 26, 2006 |
| MHI-6SV-05 | Source Verification Report of MHI | July 1, 2005 |
| MHI-6SV-06 | Source Verification Report of MHI | January 24, 2007 |
| MHI-7SV-05 | Source Verification Report of MHI/Japan Steel Work | August 12, 2005 |
| MHI-7SV-06 | Source Verification Report of MHI | January 16, 2007 |
| MHI-8SV-05 | Source Verification Report of MHI | March 26, 2007 |
| MHI-8SV-06 | Source Verification Report of MHI | Date? |
| MHI-9SV-05 | Source Verification Report of MHI/Japan Steel Work | October 13, 2005 |
| MHI-10SV-05 | Source Evaluation Report of MHI | February 8, 2006 |
| MHI-11SV-05 | Source Verification Report of MHI/Japan Steel Work | December 21, 2005 |
| SO123-XII-18.19 | Nuclear Oversight Procedure Supplier Audits | 10 |
| SO123-XII-7.12 | Nuclear Oversight Procedure Source Verification | 5 |

CALCULATIONS

| Number | Title | Revision |
|---|---|---|
| SO23-617-1-C275 | Design Report of the Channel Head Region | 6 |
| SO23-617-1-C514 | Design for RCS Flow Rate | 1 |
| SO23-617-1-M1562 | Retainer Bar Tube Wear Report | 0 |

CORRECTIVE ACTION REPORTS

Comn
were r
numb

| | | | | |
|---|---|---|---|---|
| | | | | |

DESIGN BASIS DOCUMENTS

| Number | Title | Revision |
|---|---|---|
| SO23-617-01 | Specification for Design and Fabrication of RSGs for Unit 2 and Unit 3 | 4 |
| SO23-617-1-M1492 | As-Built Reconciliation Report for Unit 3 | 2 |
| L5-04GA428 | Design of Anti-Vibration Bar | 5 |
| DBD-SO23-365 | Design Basis for Steam Generator and Secondary Side | 10 |

DESIGN CHANGE NOTIFICATIONS/SUPPLIER DEVIATION REQUESTS

| Number | Title | Revision |
|---|---|---|
| NECP 800071703 | Engineering Change Package, "Replacement Steam Generators" | 0 |
| SDR-007 43366-05007 | Circulation Ratio for RSG | 0 |
| SDR-037 43366-06037 | Tube-to-Tube Clearance in 2A RSG | 0 |
| SDR-047 43366-07047 | Tool Mark in 3A Tubesheet | 0 |
| SDR-050 43366-07050 | Tool Mark in 3B Tubesheet | 0 |

| Number | Title | Revision |
|---|---|---|
| SDR-051 43366-07051 | Unit 2A Lower Shell Assembly | 0 |
| SDR-053 43366-07053 | Unit 2B Lower Shell Assembly | 0 |
| SDR-059 43366-08059 | Unit 3B Lower Shell Assembly | 0 |
| SDR-064 43366-08064 | Axial Length of AVB | 0 |
| SDR-079 43366-08079 | Statistical Size of Tube-to-AVB Gap | 0 |
| SDR-082 43366-09082 | Divider Plate Repair of Unit 3 RSGs | 0 |
| SDR-086 10041870-09086 | Specifications for Unit 3 RSG Tube Material | 0 |
| SDR-098 10041870-10098 | Overall Height of 3A RSG | 0 |
| SDR-099 10041870-10099 | Perpendicularity and Parallelism of 3A RSG Key Bracket | 0 |
| SDR-100 10041870-10100 | Parallelism of 3B RSG Key Bracket | 0 |

DRAWINGS

| Number | Title | Revision |
|---|---|---|
| SO23-617-1-D103 | Design Drawing – Component and Outline Drawing 1 / 3 | 5 |
| SO23-617-1-D104 | Design Drawing – Component and Outline Drawing 1 / 3 | 2 |
| SO23-617-1-D106 | Design Drawing Tubesheet and Extension Ring 1 of 3 | 12 |
| SO23-617-1-D107 | Design Drawing Tubesheet and Extension Ring 2 of 3 | 5 |
| SO23-617-1-D108 | Design Drawing Tubesheet and Extension Ring 3 of 3 | 8 |
| SO23-617-1-D109 | Design Drawing Lower Shell, Middle Shell, Transition Cone and Upper Shell Stub 1 of 4 | 5 |
| SO23-617-1-D110 | Design Drawing Lower Shell, Middle Shell, Transition Cone and Upper Shell Stub 2 of 4 | 7 |
| SO23-617-1-D111 | Design Drawing Lower Shell, Middle Shell, Transition Cone and Upper Shell Stub 3 of 4 | 4 |

| Number | Title | Revision |
|---|---|---|
| SO23-617-1-D112 | Design Drawing Lower Shell, Middle Shell, Transition Cone and Upper Shell Stub 4 of 4 | 4 |
| SO23-617-1-D113 | Design Drawing Channel Head 1 of 4 | 9 |
| SO23-617-1-D113 | Design Drawing Channel Head 1 of 4 | 15 |
| SO23-617-1-D114 | Design Drawing Channel Head 2 of 4 | 13 |
| SO23-617-1-D115 | Design Drawing Channel Head 3 of 4 | 5 |
| SO23-617-1-D116 | Design Drawing Tube Bundle 1 of 3 | 1 |
| SO23-617-1-D117 | Design Drawing Tube Bundle 2 of 3 | 1 |
| SO23-617-1-D118 | Design Drawing Tube Bundle 3 of 3 | 3 |
| SO23-617-1-D159 | Design Drawing Upper Shell, Upper Head Ring and Upper Head Top 1 of 4 | 7 |
| SO23-617-1-D160 | Design Drawing Upper Shell, Upper Head Ring and Upper Head Top 2 of 4 | 2 |
| SO23-617-1-D161 | Design Drawing Upper Shell, Upper Head Ring and Upper Head Top 3 of 4 | 4 |
| SO23-617-1-D162 | Design Drawing Upper Shell, Upper Head Ring and Upper Head Top 4 of 4 | 2 |
| SO23-617-1-D210 | Design Drawing of Moisture Separator Assembly 1 of 6 | 10 |
| SO23-617-1-D211 | Design Drawing of Moisture Separator Assembly 2 of 6 | 10 |
| SO23-617-1-D212 | Design Drawing of Moisture Separator Assembly 3 of 6 | 5 |
| SO23-617-1-D274 | Design Drawing Channel Head 4 of 4 | 4 |
| SO23-617-1-D294 | Design Drawing Tube Support Plate Assembly 1 of 3 | 3 |
| SO23-617-1-D295 | Design Drawing Tube Support Plate Assembly 2 of 3 | 4 |
| SO23-617-1-D296 | Design Drawing Tube Support Plate Assembly 3 of 3 | 5 |
| SO23-617-1-D383 | Design Drawing – Critical Field Interface Dimensions and Major Tolerances 1 / 3 | 7 |
| SO23-617-1-D391 | Design Drawing Wrapper Assembly 1 of 5 | 5 |
| SO23-617-1-D392 | Design Drawing Wrapper Assembly 2 of 5 | 0 |
| SO23-617-1-D393 | Design Drawing Wrapper Assembly 3 of 5 | 2 |
| SO23-617-1-D394 | Design Drawing Wrapper Assembly 4 of 5 | 2 |

| Number | Title | Revision |
|---|---|---|
| SO23-617-1-D395 | Design Drawing Wrapper Assembly 5 of 5 | 3 |
| SO23-617-1-D494 | Design Drawing – Divider Plate1 / 2 | 10 |
| SO23-617-1-D495 | Design Drawing – Divider Plate 2 / 2 | 6 |
| SO23-617-1-D507 | Design Drawing Anti-Vibration Bar Assembly 1 of 9 | 4 |
| SO23-617-1-D508 | Design Drawing Anti-Vibration Bar Assembly 2 of 9 | 2 |
| SO23-617-1-D509 | Design Drawing Anti-Vibration Bar Assembly 3 of 9 | 0 |
| SO23-617-1-D539 | Design Drawing Anti-Vibration Bar Assembly 4 of 9 | 0 |
| SO23-617-1-D540 | Design Drawing Anti-Vibration Bar Assembly 5 of 9 | 2 |
| SO23-617-1-D541 | Design Drawing Anti-Vibration Bar Assembly 6 of 9 | 2 |
| SO23-617-1-D542 | Design Drawing Anti-Vibration Bar Assembly 7 of 9 | 8 |
| SO23-617-1-D543 | Design Drawing Anti-Vibration Bar Assembly 8 of 9 | 3 |
| SO23-617-1-D544 | Design Drawing Anti-Vibration Bar Assembly 9 of 9 | 1 |
| SO23-617-1-D680 | Design Drawing – Tubing Expansion and Seal Welding | 3 |
| SO23-617-1-D1099 | Fabrication Drawing – General Shipping Arrangement [SON 2E89; SON 2E882E0-88] | 2 |
| SO23-617-1-D1100 | Fabrication Drawing – General Shipping Arrangement [SON 3E89; SON 3E88] | 2 |
| SO23-617-1-D1488 | Fabrication Drawing – Temporary Attachment For Channel Head and Tubesheet Welding (Unit 3) | 0 |
| L5-04FW111 | Detail of AVB 1 of 5 (Center Narrow AVB) | 6 |
| L5-04FW112 | Detail of AVB 2 of 5 (Center Wide AVB) | 2 |
| L5-04FW113 | Detail of AVB 3 of 5 (Side Narrow AVB) | 2 |
| L5-04FW114 | Detail of AVB 4 of 5 (Side Wide AVB for Hot Side) | 2 |
| L5-04FW115 | Detail of AVB 5 of 5 (Side Wide AVB for Cold Side) | 2 |

ENGINEERING REPORTS (ER)

| Number | Title | Revision |
|---|---|---|
| SO23-617-1-M1401 | Divider Plate Weld Joint Separation Root Cause Evaluation Report | 4 |

| | | |
|---|---|---|
| SO23-617-1-C157 | Evaluation of Tube Vibration | 3 |
| SO23-617-1-C749 | Analytical Report of AVB Assembly | 4 |
| SO23-617-1-M1265 | Summary Design Report | 8 |
| SO23-617-1-M1231 | Performance Analysis Report | 3 |
| SO23-617-1-C682 | Analytical Report of Separator and Dryer Assemblies | 7 |
| SO23-617-01R3 | Design Report of Tube | 5 |

MHI DOCUMENTS

| Number | Title | Revision/Date |
|---|---|---|
| UHQ-08N013 | MHI Survey Report of Sumitomo Metal Industries, Limited. Steel Tube Works | 0 |
| UHQ-11N010 | MHI Survey Report of Sumitomo Metal Industries, Limited. Steel Tube Works | 0 |
| UHQ-05N015 | MHI Survey Report of Sumitomo Metal Industries, Limited. Pipe & Tube Works | 1 |
| UHQ-08N014 | MHI Survey Report of Sumitomo Metal Industries, Limited. Steel Tube Works | 0 |
| UHQ-11S005 | MHI Survey Report of Sumitomo Metal Industries, Limited. Steel Tube Works | 0 |
| UHQ-05N019 | MHI Survey Report of Sumitomo Metal Industries, Limited. Steel Tube Works | 0 |
| BUH94-06 | Quality Assurance Survey/Audit Procedure of Vendors | 6 |
| BUH94-06 | Vendor Evaluation Procedure | 9 |
| BUH94-06 | Vendor Evaluation Procedure | 13 |
| 5ZDD94-06 | Vendor Evaluation Procedure | 1 |
| UHW-68-06A002 | MHI Evaluation on Corrective Action Established by Sumitomo Metal Industries Limited | 0 |
| UHNR-SON-RSG-06N005 | Nonconformance Report for Alloy 690 SG Tubing for SONGS Unit 2 | |

| Number | Title | Revision/Date |
|---|---|---|
| UHQ-08N013 | MHI Survey Report of Sumitomo Metal Industries, Limited. Steel Tube Works | 0 |
| UHQ-07N004 | MHI Audit Report of Sumitomo Metal Industries, Limited. Steel Tube Woks | 1 |
| UHCP-70N004 | Corrective Action Plan Followup Report | 0 |
| UES-20100006 | Qualified Vendor List | 18 |
| L5-04GB004 | Submittal Document Control List | 53 |
| UGNR-SON2-RSG-020 | Nonconformance Report Channel head for Unit 2A | February 2, 2006 |
| UGNR-SON2-RSG-038 | Nonconformance Report Unacceptable local diameter change of tube holes | June 2, 2006 |
| UGNR-SON2-RSG-052 | Nonconformance Report Unacceptable length of 10 tube hole pitch of tube support plate #3 | September 11, 2006 |
| UGNR-SON2-RSG-062 | Nonconformance Report Incorrect end caps of AVB 2ASN154C and AVB 2ASN164C | December 1, 2006 |
| UGNR-SON2-RSG-075 | Nonconformance Report Unacceptable gaps between tubes and AVBs | March 24, 2007 |
| UGNR-SON2-RSG-091 | Nonconformance Report Incorrect machining for steam flow limiting device | September 4, 2007 |
| UGNR-SON2-RSG-096 | Nonconformance Report Unacceptable dimensions for steam flow limiting device of Unit 2A | October 23, 2007 |
| UGNR-SON3-RSG-009 | Nonconformance Report Unacceptable local diameter change of tube holes | May 10, 2007 |
| UGNR-SON3-RSG-024 | Nonconformance Report Some gaps between tubes and AVBs are larger than the criterion | November 30, 2007 |
| UGNR-SON3-RSG-049 | Nonconformance Report Out of tolerance on hand holes inside diameter | March 2, 2009 |
| UGNR-SON3-RSG-055 | Nonconformance Report Divider plate metal repair butter/weld crack after post bake | September 11, 2009 |

| Number | Title | Revision/Date |
|---|---|---|
| UHQ-08N013 | MHI Survey Report of Sumitomo Metal Industries, Limited. Steel Tube Works | 0 |
| UGNR-SON-RSG-06N002 | Nonconformance Report Feedwater nozzle for unit 2 ID: 21721-101 | February 2, 2006 |
| B91U-N0001 | Mitsubishi Heavy Industries Ltd Kobe Shipyard & Machinery Works Quality Assurance Manual (Nuclear) | 39 |
| UES-69-040038 | Mitsubishi Heavy Industries Ltd Kobe Shipyard & Machinery Works Quality Assurance Program Manual (Project Addenda) | 15 |
| UHH-G06A97 | Stop Work Order for FMA (Final Mill Annealing) on Manufacturing of Heat Transfer Tubing for SONGS RSG | 0 |

MISCELLANEOUS DOCUMENTS

| | | |
|---|---|---|
| AR 060500134 | Action Request: Qualification Letter | |
| AR 040901345 | Action Request: Qualification Letter | |
| AR 050301458 | Action Request: Qualification Letter | |
| | Setpoint Transmittal Unit 2 and 3 Gas Monitors | December 6, 2010 |
| | SONGS Unit 3 Chemistry/Operations Logs – SG Event Timeline | January 31, 2012 |
| | Radiation Monitor 3RT-7870 Setpoints | May 31, 2011 |
| | Radiation Monitor 3RT-7818A Setpoints | May 31, 2011 |
| 2G-030-3 | Condenser Air Ejector Continuous Gas Post-Release Report | January 31, 2012 |
| SO23-617-01 | Specification for Design and Fabrication of RSGs for Unit 2 and Unit 3 | 4 |
| SO23-617-02 | Specification for Baseline Pre-Service Examination (PSE) on Tubing for Replacement Steam Generators | 1 |
| | Updated Final Safety Analysis Report for San Onofre Units 2 and 3 | April 2009 |
| SO23-617-1-M29 | Design Review Item List | 9 |

| | | |
|---|---|---|
| DA 2002-92 | Dominion Audit of Mitsubishi Heavy Industries | June 9, 2002 |
| V03-008 | Omaha Public Power District Audit of Mitsubishi Heavy Industries | July 18, 2003 |
| 99901030/2008-201 | Mitsubishi Heavy Industries (MHI), Kobe, Japan, inspection of selected portions of MHI's Quality Assurance (QA) program, and 10 CFR Part 21 program | July 18, 2008 |
| 99901384/2009-201 | Sumitomo Metal Industries, Limited, Higashi-Mukojima Amagasaki, Japan, inspection of selected portions of Sumitomo's quality assurance (QA) program and 10 CFR Part 21 program | November 13, 2009 |
| SMI-AQA-9041 | Reply to Notice of Nonconformance(99901 384/2009-201-01) | 0 |

MODIFICATIONS

| Number | Title | Date |
|---|---|---|
| Engineering Change Package NECP 800071702 | 50.59 Screening and Evaluation for Replacement Steam Generators – Unit 2 | July 31, 2009 |
| Engineering Change Package NECP 800071703 | 50.59 Screening and Evaluation for Replacement Steam Generators – Unit 3 | July 31, 2009 |

NUCLEAR NOTIFICATIONS

| | | | | |
|---|---|---|---|---|
| 201907899 | | | | |

*NN's issued as a result of inspection activities.

Comn
numer
were i
Pleas

PROCEDURES

| Number | Title | Revision |
|---|---|---|
| SO123-ODCM | Offsite Dose Calculation Manual | 0 |

| Number | Title | Revision |
|---|---|---|
| SO123-0-47 | Notification and Reporting of Significant Events | 18 |
| SO123-III-5.9 | Manual Effluent Gaseous Release Permits, Setpoint Calculations, and Monitor Calibration Constant Evaluations | 8 |
| SO123-VIII-1 | EPIP: Recognition and Classification of Emergencies | 36 |
| SD-SO23-310 | System Description - Turbine Building Sampling System | 9 |
| SD-SO23-690 | System Description – Steam Generator E088/089 | 18 |
| SD-SO23-690 | System Description – Steam Generator Radiation Monitors RE-6753 & RE-6759 | 18 |
| SD-SO23-690 | System Description – Condenser Air Ejector Wide Range Radiation Monitors RE-7870A/B & Low Range Radiation Monitors RE-7818 | 18 |
| SB-SO-FB-006 | Divider Plate Weld Joint Repair Procedure | 10 |
| SB-SO-HT-1001 | Post Weld Heat Treatment Procedure | 22 |
| SO123-XXXII-2.27 | Supplier Deviation Requests (SDRs) | 5 |
| SO23-617-1-D104 | Design Drawing - Component and Outline Drawing 2/3 | 2 |
| SO23-617-1-D1099 | General Shipment Arrangement SON-2A | 4 |
| SO23-617-1-M1246 | Hydrostatic Test Procedure | 3 |
| SO23-617-1-M139 | Post Weld Heat Treatment Procedure | 21 |
| SO23-617-1-M1395 | Divider Plate Weld Joint Procedure | 9 |
| SO23-617-1-M1398 | Divider Plate Weld Joint Repair Plan | 12 |
| SO23-617-1-M1461 | Additional Post Weld Heat Treatment Procedure for Divider Plate Weld Joint Repair | 0 |

| Number | Title | Revision |
|---|---|---|
| SO23-617-1-M616 | Tubesheet Drilling Procedure | 9 |
| SO23-617-1-M733 | Helium Leak Test Procedure of the Tube to Tubesheet Welds (High Pressure) | 5 |
| SO23-617-1-M735 | Helium Leak Test Procedure of the Tube to Tubesheet Welds (Low Pressure) | 3 |
| SO23-617-1-M819 | AVB Structure Assembly Procedure | 8 |
| SO23-617-1-M820 | Tubing and AVB Installation Procedure | 6 |
| SO23-617-1-M821 | Anti-Vibration Bar Inspection Procedure (After Assembly) | 5 |
| UGS-L5-050043 | Anti-Vibration Bar Inspection Procedure (Individual Bar) | 1 |
| UGS-L5-050045 | Inspection Procedure for Tube and Anti-Vibration Bar Inspection | 10 |

VENDOR DOCUMENTS

| Number | Title | Revision/Date |
|---|---|---|
| 51-9176667-001 | Engineering Information Record, "SONGS 2C17 & 3C17 Steam Generator Degradation Assessment" | 1 |
| UGNR-SON2-RSG-012 | DI for Tube Support Plate Material | 1 |
| UGNR-SON2-RSG-014 | Discrepancy for tube thickness of TSP between Drawing and Purchase Specification | 0 |
| UGNR-SON2-RSG-015 | Unacceptable Indications by MT for wrapper support of Unit 2 #A | 1 |
| UGNR-SON2-RSG-021 | Unacceptable Indications by MT for Anti rotation support of Unit 2 #A | 0 |
| UGNR-SON2-RSG-027 | Unacceptable MT indication for Anti-Rotation Supports | 0 |

| Number | Title | Revision/Date |
|---|---|---|
| UGNR-SON2-RSG-054 | Unacceptable length of 10 tube hole pitch of tube support Plate # 6 | 1 |
| UGNR-SON2-RSG-058 | Insufficient clearance between the tubes in Row No. 28 and 30 in Column No. 22 | 3 |
| UGNR-SON2-RSG-059 | Insufficient clearance between the tubes in Row No 92 and 94 in Column No. 34 | 0 |
| UGNR-SON2-RSG-067 | Unacceptable Gaps between Tubes and AVBs | 7 |
| UGNR-SON2-RSG-075 | Unacceptable gaps between Tubes and AVBs | 1 |
| UGNR-SON2-RSG-091 | Incorrect Machining for Steam Flow Limiting Device | 0 |
| UGNR-SON2-RSG-103 | Damaged Locking Plates of Vane Jacking Device | 9 |
| UGNR-SON2-RSG-109 | As built dimension of #2A RSG | 1 |
| UGNR-SON2-RSG-112 | As built dimension of #2B RSG | 0 |
| UGNR-SON3-RSG-001 | Tubesheet | 0 |
| UGNR-SON3-RSG-018 | Unacceptable local diameter change of Tube holes | 2 |
| UGNR-SON3-RSG-024 | Some Gaps between Tubes and AVBs are larger than the criterion | 1 |
| UGNR-SON3-RSG-030 | Some gaps between tubes and AVBs are larger than the criterion | 0 |
| UGNR-SON3-RSG-051 | Divider Plate Weld Crack | 16 |
| UGNR-SON3-RSG-052 | Divider Plate Weld Crack | 19 |
| UGNR-SON3-RSG-057 | Extension of Tubesheet PWHT Duration | 1 |

| Number | Title | Revision/Date |
|---|---|---|
| UGNR-SON3-RSG-059 | Out of Tolerance dimensions on Primary Inlet/Outlet Nozzles and Support Skirt | 1 |
| UGNR-SON3-RSG-062 | Out of tolerance dimensions on Primary Inlet/Outlet Nozzles and Support Skirt (#B RSG) | 1 |
| UGNR-SON3-RSG-067 | UT indications in the Alloy 600/690 butter of Divider Plate Weld Groove | 0 |
| UGNR-SON3-RSG-074 | As built dimensions of #3A RSG (Overall Height) | 0 |
| UGNR-SON3-RSG-075 | As built dimension of #3A RSG | 1 |
| UGNR-SON3-RSG-076 | As built dimension of #3B RSG | 0 |
| UHNR-SON3-RSG-07N001 | Divider Plates for Unit 3 | 0 |
| Heat Treatment Record 40010SG-B-900D-R1-68 | Heat Treatment Chart for SG3 | April 4, 2012 |
| SO23-617-1-M149 | Purchase Specification for Heat Transfer Tubing | 4 |
| Fabrication Process Sheet 3901-SG-A-400E (Order 2563901/G101) | Rework of AVB Insertion for SONGS Unit 2 Replacement Steam Generator #A – Lower Portion | 1 |
| Fabrication Process Sheet 3901-SG-A-400D (Order 2563901/2300) | Helium Leak Test for SONGS Unit 2 Replacement Steam Generator #A – Lower Portion | 0 |
| TSN-5050 | Control Document Status list For Alloy 690 SG Tubing | 2 |
| TSN-5051 | Program of Preproduction Qualification (PPQ) For Alloy 690 SG Tubing | 3 |
| TSN-5053 | Melting Procedure for Alloy 690 SG Tubing | 0 |

| Number | Title | Revision/Date |
|---|---|---|
| TSN-5054 | Identification and Traceability Procedure for Alloy 690 SG Tubing | 2 |
| TSN-5055 | Prohibited and Detrimental Material Control Procedure for Alloy 690 SG Tubing | 0 |
| TSN-5072 | Sampling Test Specimen Procedure for Alloy 690 SG Tubing | 2 |
| TSN-5073 | Chemical Analysis Procedure for Alloy 690 SG Tubing | 1 |
| TSN-5074 | Inclusion Test Procedure for Alloy 690 SG Tubing | June 4, 2005 |
| 005F-No.4316 | PPQ Test Results of Alloy 690 SG Tubing for San Onofre Nuclear Generating station Unit 2&3 | 2 |
| 4009-3ir01 | Moody International Ltd Inspection Report of Sumitomo Metal Industries | September 28, 2005 |

## SEQUENCE OF EVENTS

### San Onofre Nuclear Generating Station, Unit 2 and 3 Steam Generators

| Date | Event Description |
|---|---|
| November 2001 | Licensee forms a team to study the viability of replacing the steam generators |
| May 7, 2002 | Vendor benchmarking commences |
| July 2002 | Bechtel replacement study complete |
| November 7, 2003 | Replacement steam generator specification complete |
| December 12, 2003 | Replacement steam generator specification sent to procurement office |
| December 21, 2003 | Replacement steam generator request for proposal issued |
| February 17, 2004 | Bechtel installation study report completed |
| February 27, 2004 | Steam generator replacement request filed with California Public Utility Commission |
| February 27, 2004 | Replacement steam generator bids received by SCE |
| July 28, 2004 | Replacement steam generator vendor selected |
| August 2, 2004 | Replacement steam generator bid evaluation review board start |
| September 13, 2004 | Replacement steam generator bid evaluation completed |
| September 16, 2004 | SCE Board of Directors approval for Mitsubishi to design and manufacture steam generators |
| September 30, 2004 | Replacement steam generator contract signed |
| September 30, 2004 | Fabrication of Unit 2 and Unit 3 steam generators commences at Mitsubishi |
| November 2004 | SCE performs first full quality assurance audit of Mitsubishi |
| March 2, 2005 | Replacement steam generator installation specification sent to procurement office |
| March 17, 2005 | Mitsubishi/SCE anti-vibration bar design discussion |
| March 2005 | SCE performs follow-up surveillance audit of Mitsubishi |
| March 23, 2005 | SCE places conditional qualification on Mitsubishi |

| | |
|---|---|
| September 21, 2005 | Final environmental impact report released to public |
| October 2005 | SCE performs follow-up quality assurance audit of Mitsubishi |
| December 15, 2005 | California Public Utility Commission approval received |
| December 15, 2005 | Installation contract signed with Bechtel |
| February 2006 | SCE performs follow-up quality assurance audit of Mitsubishi |
| March 10, 2006 | Edison International Company Board of Directors approval of steam generator replacement project |
| April 22, 2006 | SONGS Unit 2 refueling outage completed |
| May 1, 2006 | Replacement steam generator transportation specification issued |
| May 10, 2006 | SCE removes conditional qualification from Mitsubishi |
| September 27, 2006 | Sumitomo Metal Industries issues a non-conformance report on some tubing for non-conformance to specifications associated with the final mill annealing process |
| September 27, 2006 | Mitsubishi issues stop work order to Sumitomo |
| September 28, 2006 | Mitsubishi issues corrective action request to Sumitomo based on the final mill annealing non-conformance report |
| September 29, 2006 | Mitsubishi visits Sumitomo to conduct root cause investigation |
| October 3, 2006 | Mitsubishi visits Sumitomo to confirm the adequacy of the corrective actions taken to address the root cause findings from the September 29, 2006 meeting |
| October 3, 2006 | Mitsubishi releases stop work order after confirming adequacy of Sumitomo's corrective actions |
| November 10, 2006 | Non-conformance report associated with final mill annealing process is closed |
| March 12, 2007 | Corrective action request associated with the final mill annealing non-conformance report closed |
| May 8, 2007 | Mitsubishi performs followup audit at Sumitomo and issues corrective action request for two findings in the audit |
| July 17, 2007 | Sumitomo submits corrective actions taken for the findings of the May 8, 2007 audit; Mitsubishi closes corrective action request. |
| September 13, 2006 | Mitsubishi/SCE technical meeting regarding anti-vibration bars |

| | |
|---|---|
| April 2008 | Fabrication of Unit 2 steam generators complete |
| April – June 2008 | Mitsubishi performs primary and secondary side hydrostatic pressure tests of Unit 2 steam generators |
| July 4, 2008 | AREVA performs baseline pre-service eddy current examinations on steam generator 2E0-89 at Mitsubishi facilities in Kobe, Japan |
| July 18, 2008 | AREVA performs baseline pre-service eddy current examinations on steam generator 2E0-88 at Mitsubishi facilities in Kobe, Japan |
| September and October 2008 | Final inspection for Unit 2 steam generators is completed. Primary and secondary sides filled with nitrogen. |
| December 16, 2008 | Unit 2 steam generators shipped from Kobe, Japan |
| February 14, 2009 | Unit 2 steam generators arrive at SONGS |
| Early March 2009 | Fabrication of Unit 3 steam generators complete |
| Middle March 2009 | Primary and secondary hydrostatic pressure tests conducted on Unit 3 steam generators |
| March 18, 2009 | Unit 3 divider plate weld failure discovered |
| March – July 2009 | Root cause evaluation of the divider plate-to-tubesheet weld conducted by Mitsubishi |
| March – June 2009 | Repair procedures developed for Unit 3 steam generators |
| June 2009 | Repair work on Unit 3 steam generators commences |
| July 2009 | AREVA performs final pre-service eddy current examinations on Unit 2 steam generators at SONGS |
| September 2009 – April 2010 | Unit 2 performs a refueling outage and installs the replacement steam generators |
| March 29, 2010 | Repair work to Unit 3 steam generator 3E0-89 complete |
| April 5, 2010 | Repair work to Unit 3 steam generator 3E0-88 complete |
| April 2010 | Unit 2 recommences power operations |
| April 18, 2010 | Unit 3 steam generator 3E0-89 passes primary side hydrostatic pressure retest |
| April 24, 2010 | Unit 3 steam generator 3E0-88 passes primary side hydrostatic pressure retest |

| | |
|---|---|
| June 2010 | AREVA performs baseline pre-service eddy current examinations on Unit 3 steam generators at Mitsubishi facilities in Kobe, Japan |
| August 2, 2010 | Unit 3 steam generators shipped |
| October 4, 2010 | Unit 3 steam generators arrive at SONGS |
| October 2010 – February 2011 | Unit 3 performs a refueling outage and installs the replacement steam generators |
| February 2011 | Unit 3 recommences power operations |
| January 10, 2012 | Unit 2 refueling outage start |
| January 31, 2012 | Unit 3 tube leak; rapid shutdown commences |
| February 2, 2012 | Unit 3 reaches cold shutdown conditions |
| February 12, 2012 | Unit 3 eddy current inspections commence on both steam generators |
| March 13, 2012 | In-situ pressure testing commences on tubes in steam generator 3E0-88 of Unit 3 |
| March 14, 2012 | In-situ pressure test failures on tubes located in Row 106 Column 78, Row 102 Column 78, and Row 104 Column 78 of steam generator 3E0-88 |
| March 15, 2012 | In-situ pressure test failures on tubes located in Row 100 Column 80, Row 107 Column 77, Row 101 Column 81, and Row 98 Column 80 of steam generator 3E0-88 |
| March 16, 2012 | In-situ pressure test failure on tube located in Row 99 Column 81 of steam generator 3E0-88 |
| March 16 – 21, 2012 | The 65 remaining tubes in steam generator 3E0-88 pass in-situ pressure testing |
| March 15 – 21, 2012 | The 56 identified tubes in steam generator 3E0-89 of Unit 3 are in-situ pressure tested and all tubes passed. |
| March 19 – 29, 2012 | NRC Augmented Inspection Team performs inspections at SONGS |
| March 23, 2012 | NRC received a letter from SCE outlining their commitments for corrective actions prior to restart of both Unit 2 and Unit 3 |
| March 27, 2012 | NRC issues a Confirmatory Action Letter to SCE |
| June 18, 2012 | NRC conducts public Augmented Inspection Team exit meeting near SONGS |

UNITED STATES
NUCLEAR REGULATORY COMMISSION
REGION IV
1600 EAST LAMAR BLVD
ARLINGTON, TEXAS 76011-4511

~~July 18, 2012~~

Mr. Peter Dietrich
Senior Vice President and
Chief Nuclear Officer
Southern California Edison Company
San Onofre Nuclear Generating Station
P.O. Box 128
San Clemente, CA 92674-0128

SUBJECT: SAN ONOFRE NUCLEAR GENERATING STATION – NRC AUGMENTED INSPECTION TEAM REPORT ~~05000361/2012007 and~~ 05000362/2012007

Dear Mr. Dietrich:

The U. S. Nuclear Regulatory Commission (NRC) completed an inspection at your San Onofre Nuclear Generating Station (SONGS). The enclosed report documents the inspection results, which were discussed with you and other members of your staff during a public exit meeting on June 18, 2012.

~~The Augmented Inspection Team (AIT) was established to review the causes, safety implications, and your staff's actions following an event that occurred on January 31, 2012, involving a reactor coolant leak identified in a Unit 3 steam generator and a subsequent identification that multiple steam generator tubes in Unit 3 had experience substantial and unusual wear, eight of which failed pressure testing. The SONGS Unit 3 steam generators were new and had been in operation for less than one operating cycle. At the time of the event, SONGS Unit 2 was shutdown in a refueling outage with steam generators that had been in service for one operating cycle.~~

Unit 3 had been operating for approximately one year following replacement of the steam generators when on January 31, 2012, control room operators received alarms, that indicated reactor coolant was leaking into steam generator 3E0-88. The leak was unexpected, and the control room operators responded in accordance with their procedures to perform a rapid shutdown, since the leak, although small, had increased enough in a short period of time to warrant the precautionary shutdown. The estimated leak rate was 75 gallons per day. The facility license allows full power operation with a steady leak rate of less than 150 gallons per day.

The first indication of the leak was from the main condenser air ejector radiation monitors reaching their alarm set point. The radiation monitors continuously sample from a vent stack for the purpose of rapidly identifying steam generator tube leaks. This was a direct release of

radioactivity to the atmosphere, which is allowed by the facility license, up to limits in the regulations. The licensee reviewed the amount of gaseous radioactivity released and estimated a dose of approximately 0.0000452 mrem to a member of the public. The annual regulatory limit to a member of the public is 100 mrem per year. During a radiation protection inspection the week of February 13, 2012, the team reviewed the licensee dose estimates and did not identify any issues.

Unit 3 control room operators performed a controlled shutdown of Unit 3 on January 31, 2012, and reached cold shutdown conditions on February 2, 2012. The operators then prepared the steam generators for tube inspections, which were started on February 12, 2012. The first inspection confirmed the location of the leak in steam generator 3E0-88. One tube was found with a small leak and no other tubes were leaking.

The licensee completed an extensive and expanded eddy current inspection of 100 percent of the steam generator tubes in both Unit 3 steam generators. Following pre-established testing requirements, the licensee identified 129 tubes in Unit 3 (56 tubes in steam generator 3E0-89 and 73 tubes in steam generator 3E0-88) that required in-situ pressure testing. This testing began on March 13, 2012, and was performed under ambient conditions.

Of the 129 tubes tested, a total of 8 tubes failed in-situ pressure testing which included the original tube that was leaking. All of the failed tubes occurred in steam generator 3E0-88. Three of the tubes failed at or below a test pressure (3200 psi) equivalent to a design basis main steam line break differential pressure and temperature. The remaining five tubes failed near, but below the maximum differential test pressure of 5250 psig. This test pressure was equivalent to the minimum burst pressure capacity required by the plant technical specifications.

In accordance with Management Directive 8.3, "NRC Incident Investigation Program," deterministic and conditional risk criteria were used to evaluate the level of NRC response for this operational event. This event met three deterministic criteria (involved a major deficiency in design having potential generic safety implications; led to a significant loss of integrity of the primary coolant pressure boundary; and, involved an emergency or non-emergency event or situation, related to the health and safety of the public or on-site personnel or protection of the environment, for which a 10 CFR 50.72 report has been submitted that is expected to cause significant, heightened public or government concern) and the conditional large early release probability for the event was estimated to be in the overlap range for a special inspection/augmented inspection. Based on deterministic criteria being met and the risk assessment of this condition, Region IV, in consultation with the Office of Nuclear Reactor Regulation and Office of Nuclear Security and Incident Response, concluded that the NRC response should be an augmented team inspection.

This augmented inspection was chartered, in part, to ~~review~~identify the circumstances surrounding the tube degradation; review the licensee's actions following discovery of the conditions; evaluate the licensee's ~~determination~~review of ~~the~~potential causes of the unusual steam generator tube wear; review the steam generator modeling; and, assess the differences between Unit 2 and Unit 3 steam generators. ~~The charter is available in ADAMS at ML12075A258. It is not the responsibility of an AIT to determine compliance with the NRC rules~~

~~and regulations or to recommend enforcement actions, this will be done through subsequent NRC inspection or review.~~

~~The~~ Based on inspection, the team concluded that: (1) plant operators responded to the ~~January 31, 2012, steam generator tube leak~~event in accordance with procedures ~~and~~ in a manner that protected public health and safety~~. Plant~~; (2) safety systems ~~worked as expected during the event.~~

~~The NRC team identified ten~~were maintained and responded in accordance with the plant design; and (3) the loss of steam generator tube integrity was a serious safety issue that must be resolved. The purpose of this inspection was to gather facts and identify issues requiring followup, and, as such, no findings were identified. Ten items requiring additional ~~review for regulatory action. These items~~followup are documented as "unresolved" items in the enclosed report. ~~The NRC will conduct subsequent inspections or reviews to determine what, if any, regulatory actions result from the "unresolved" items.~~

~~SONGS Unit 3 steam generators had experienced excessive vibration of tubes in the U-bend region of the steam generators to the extent that the tubes rubbed against each other (tube-to-tube interactions) causing excessive wear and loss of structural integrity. Your staff determined that the vibration was caused by the steam conditions in the U-bend region of the steam generators by a phenomenon called "fluid elastic instability." The NRC inspection team concluded that the steam generators' design and configuration did not provide the necessary margin to prevent this phenomenon.~~

~~Although the steam generator tube degradation from this phenomenon observed in Unit 2 steam generators was not as severe, the NRC team concluded that both units' steam generators were of similar design with similar thermal hydraulic conditions and configurations. Therefore, SONGS Unit 2 steam generators are also susceptible to this phenomenon.~~

~~Accordingly, as documented in NRC Confirmatory Action Letter dated March 27, 2012, (ML12087A323), you are required to submit in writing to NRC for review and acceptance, your actions and plans to prevent recurrence of loss of tube integrity before the resumption of power operations in both SONGS Units 2 and 3.~~

In accordance with 10 CFR 2.390 of the NRC's "Rules of Practice," a copy of this letter, its enclosure, and your response (if any) will be available electronically for public inspection in the NRC Public Document Room or from the Publicly Available Records (PARS) component of the NRC's document system (ADAMS). ADAMS is accessible from the NRC Web site at http://www.nrc.gov/reading-rm/adams.html (the Public Electronic Reading Room).

Sincerely,

~~/RA/~~

Elmo E. Collins
Regional Administrator

Docket No.: ~~50-361, 50-362~~05000362
License No: NPF-~~10, NPF-~~15

Enclosure:
~~1.~~ Inspection Report ~~05000361/2012007 and~~ 05000362/~~20120072~~012-007

w/Attachment~~(s)~~:
~~1.~~ Supplemental Information
~~2. Sequence of Events~~

Form

cc w/ encl: Electronic Distribution

DISTRIBUTION:
~~(Ray.KellerDale.Powers@nrc.gov)~~
Regional Administrator (Elmo.Collins@nrc.gov)
Deputy Regional Administrator
(Art.Howell@nrc.gov)
DRP Director (Kriss.Kennedy@nrc.gov)
DRP Deputy Director (Allen.Howe@nrc.gov)
DRS Director (Tom.Blount@nrc.gov)
DRS Deputy Director (Patrick.Louden@nrc.gov)
Senior Resident Inspector
(Greg.Warnick@nrc.gov)
Resident Inspector (John.Reynoso@nrc.gov)
SONGS Administrative Assistant
(Heather.Hutchinson@nrc.gov)
Branch Chief, DRS/PSB2
(Greg.Werner@nrc.gov)
Branch Chief, DRP/D (Ryan.Lantz@nrc.gov)
Senior Project Engineer, DRP/D
(Nick.Taylor@nrc.gov)
Project Engineer, DRP/D (David.You@nrc.gov)
Project Engineer, DRP/D (Brian.Parks@nrc.gov)
Public Affairs Officer (Victor.Dricks@nrc.gov)
Public Affairs Officer (Lara.Uselding@nrc.gov)
Branch Chief, DRS/TSB
RITS Coordinator (Marisa.Herrera@nrc.gov)
Regional Counsel (Karla.Fuller@nrc.gov)
Congressional Affairs Officer
(Jenny.Weil@nrc.gov)
OEMail Resource
RIV/ETA: OEDO (Michael.McCoppin@nrc.gov)
DRS/TSB STA (Dale.Powers@nrc.gov)
RSLO (Bill.Maier@nrc.gov)
D/DIR, DORL (Louise.Lund@nrc.gov)
PM (Randy.Hall@nrc.gov)
D: NRR (Eric.Leeds@nrc.gov)
D: NSIR (Jim.Wiggins@nrc.gov)
D: NRO (Glen.Tracy@nrc.gov)
NRR/LPL4 (Michael.Markley@nrc.gov)
NRR/IOEB (Harold.Chernoff@nrc.gov)
~~NRR/DORL (Doug.Broddus@nrc.gov)~~
EDO (Bill.Borchardt@nrc.gov)
DEDR (Michael.Johnson@nrc.gov)
DIR, DORL Michele.Evans@nrc.gov

DOCUMENT NAME: S:DRS\REPORTS\SONGS 2012007 AIT-GEW
~~ADAMS Accession No.:~~ ML12188A748

| SUNSI Rev Compl. | ☑Yes ☐ No | ADAMS | ☑Yes ☐ No | Reviewer Initials | GEW |
|---|---|---|---|---|---|
| Publicly Avail. | ☑Yes ☐ No | Sensitive | ☐Yes ☑ No | Sens. Type Initials | GEW |

| ~~DRS/PSB1~~AIT Member/RIV | AIT Member/~~RIV~~RII | AIT Member/~~RII~~NRO | AIT Member/~~NRO~~NRR | AIT Member/NRR | AIT Member/~~NRR~~RES |
|---|---|---|---|---|---|
| ~~GWerner~~JReynoso | ~~JReynoso~~JRivera-Ortiz | ~~JRivera-Ortiz~~JOrtega-Luciano | ~~JOrtega-Luciano~~EMurphy | ~~EMurphy~~AJohnson | ~~AJohnson~~CThurston |
| ~~GEW /RA/~~ | ~~Per e-mail~~ | ~~Per e-mail~~ | ~~Per e-mail~~ | ~~Per e-mail~~ | ~~Per e-mail~~ |
| ~~07/09/12~~ | ~~07/10/12~~ | ~~07/09/12~~ | ~~07/09/12~~ | ~~07/12/12~~ | ~~07/12/12~~ |
| AIT ~~Member/RES~~ Team Leader/RIV | ~~SRA/RIV~~D:DRS | ~~AIT Team Leader/RIV~~BC/D:DRP | ~~D:DRS~~DRA | RA | ~~RA~~ |
| ~~CThurston~~GWerner | ~~MRunyan~~TBlount | ~~GWerner~~RLantz | ~~TBlount~~AHowell | ECollins | ~~ECollins~~ |
| ~~Per e-mail~~ | ~~Per e-mail~~ | ~~GEW /RA/~~ | ~~TB /RA/~~ | | ~~/RA/~~ |
| ~~07/11/12~~ | ~~07/12/12~~ | ~~07/12/12~~ | ~~07/13/2012~~ | | ~~07/18/2012~~ |

OFFICIAL RECORD COPY

DIR, DIRS Ho.Nieh@nrc.gov
D/DIR, DIRS John.Lubinski@nrc.gov

Form

## EXECUTIVE SUMMARY

On ~~March 19, 2012, an Augmented Inspection Team (AIT) was dispatched to~~January 31, 2012, San Onofre Nuclear Generating Station ~~to gather facts and understand the circumstances surrounding the January 31, 2012~~(SONGS) Unit 3 control room operators received an alarm that indicated a primary-to-secondary ~~leak~~ reactor coolant leak from steam generator 3E0-88. Although the leak rate was small, it increased enough in a short period of time for the licensee to perform a rapid shutdown. The estimated leak rate was 75 gallons per day. The facility license allows full power operation with a steady state leak rate of less than 150 gallons per day. On February 2, 2012, Unit 3 reached cold shutdown conditions.

On February 12, 2012, Southern California Edison (SCE) commenced eddy current inspections of 100 percent of the tubes in both Unit 3 steam generators. During these inspections, the licensee discovered unexpected wear in both steam generators, including wear at retainer bars (similar to the wear found in Unit 2 steam generators) and significant tube-to-tube wear in the free-span areas. The inspections identified 56 tubes in steam generator 3E0-89 and ~~failure of eight~~73 tubes in steam generator ~~tubes~~ 3E0-88 that SCE performed in-situ pressure testing on to ~~maintain~~determine if they met the structural integrity ~~as required by~~requirements in plant technical specifications ~~during testing~~.

From March 13 – 21, 2012, AREVA conducted in-situ pressure testing of the suspect tubes in both steam generators. There were a total of eight tube failures during testing, all in steam generator 3E0-88. These tubes failed to satisfy the tube integrity performance criteria. At the time of the augmented team inspection, no stabilization or plugging of tubes had been performed in Unit 3 because the licensee was still conducting a cause evaluation of the failed tubes. There were two members of the Augmented Inspection Team on-site during the week of March ~~13, 2012. The primary-to-secondary leak was the result of a single tube in Unit 3 steam generator 3E0-88 failing to maintain structural integrity.~~ 12 that observed portions of the in-situ pressure testing.

~~Specifically the AIT was chartered to review the circumstances surrounding the tube degradation; review the licensee's actions following discovery of the conditions; evaluate the licensee's determination of the causes of the unusual steam generator tube wear; review the steam generator modeling; and, assess the differences between Unit 2 and Unit 3 steam generators.~~

~~The team determined that plant operators responded to the event in a manner that protected public health and safety and all safety systems performed their functions to support the safe shutdown and cooldown of the plant. However, the loss of steam generator tube integrity is a serious safety issue that must be resolved prior to further power operation.~~

~~The AIT~~On March 23, 2012, NRC received a letter from SCE outlining their commitments for corrective actions prior to restart of both Unit 2 and Unit 3.

On March 27, 2012, the NRC issued a Confirmatory Action Letter to SCE, which outlined specific actions the licensee must complete before restarting Units 2 and 3 that included identifying the cause of the tube wear; taking corrective actions to prevent loss of tube integrity; and performing a mid-cycle outage to perform tube inspections.

From March 19 – 29, 2012, the NRC Augmented Inspection Team performed on-site inspections at SONGS. After the on-site portion was completed, the team continued to review various documents and attended a number of expert panels associated with the cause evaluations, thermal/hydraulic modeling, and Unit 2 operational assessment. The team identified ten unresolved items that warranted additional follow-up: (1) adequacy of the post trip/transient procedure; (2) evaluation and disposition of the Unit 3 loose parts monitor alarms; (3) design of retainer bar; (4) control of original design dimensions; (5) evaluation of and controls for divider plate repair; (6) atmospheric controls of Unit 3 steam generators during shipment; (7) no tube bundle support used during shipping; (8) evaluation and disposition of ~~accelerometer readings during shipping~~accelerometers; (9) adequacy of Mitsubishi's thermal-hydraulic model; and (10) change of methodologies associated with 10 CFR 50.59 review. ~~Consistent with existing NRC inspection processes, these unresolved issues will be inspected and dispositioned during follow-up inspection efforts to determine if there are any violations of regulatory requirements.~~

~~The AIT inspection~~

The team determined: (1) plant operators responded to the event in accordance with procedures in a manner that protected public health and safety; (2) equipment responded in accordance with the plant design; and (3) the cause evaluations for Unit 2 and Unit 3 tube wear were appropriate.

At the time of the leak on Unit 3 steam generator 3E0-88, Unit 2 had completed eddy current testing of all the tubes in both steam generators as part of their first refueling outage subsequent to the steam generators being replaced in 2009. The eddy current testing did identify significant tube wear around the upper retainer bar, with one tube requiring in-situ pressure testing. Wear indications were found at anti-vibration bar supports, tube support plates and at a foreign object (that was removed). Southern California Edison did determine the cause of tube wear in Unit 2 to be from vibration of the tubes against the retainer and anti-vibration bars. Initially, no tube-to-tube wear was identified. Because of the extensive tube-to-tube wear identified on Unit 3, SCE conducted additional eddy current testing on 1375 tubes on each Unit 2 steam generator. This testing was completed using a more sensitive probe in the same area where tube-to-tube wear was identified on Unit 3. The licensee identified that two tubes in Unit 2 exhibited tube-to-tube wear similar to the wear identified in Unit 3 steam generators. Initially, these findings resulted in a total of 94 plugged tubes, with 15 tubes stabilized in steam generator 2E0-89. For steam generator 2E0-88 this initially resulted in 98 plugged tubes, with 18 tubes stabilized. Additional plugging and stabilizing was completed for Unit 2 steam generators to address the causes of

tube-to-tube wear identified. The corrective actions taken to address the causes of the tube-to-tube wear will be inspected as part of the Confirmatory Action Letter and documented in Inspection Report 05000361, 362/2012009.

Overall, the team concluded that: ~~(1)~~ SCE was ~~adequately~~ pursuing the causes of the unexpected Unit 3 steam generator tube-to-tube degradation. In an effort to identify the causes, SCE ~~retained~~brought in a ~~significant~~large number of outside industry experts, consultants, and steam generator manufacturers, including Westinghouse and AREVA to perform thermal-hydraulic and flow induced vibration modeling and analysis~~; (2) The~~. The licensee identified the most probable causes of the tube-to-tube wear as a combination of ~~unpredicted, adverse~~higher than predicted thermal-/hydraulic conditions and ~~insufficient~~improvements in the manufacturing of the Unit 3 steam generators. The improvements in the manufacturing resulted in less contact forces ~~in the upper tube bundle caused a phenomenon called~~ "between the anti-vibration bars and the tubes. The combination of these causes allowed fluid-elastic instability" ~~which was a significant contributor to the tube to tube wear resulting in the tube leak. The team concluded that the differences in severity of the tube-to-tube wear between Unit 2 and Unit 3 may be related to the changes to the manufacturing/fabrication of the tubes and other components which may have resulted in increased clearance between the anti-vibration bars and the tubes; (3) Due to modeling errors, the SONGS replacement generators were not designed with adequate thermal hydraulic margin to preclude the onset of fluid-elastic instability. Unless changes are made to the operation or configuration of the steam generators, high fluid velocities and high void fractions in localized regions in the u-bend will continue to cause excessive tube wear and accelerated wear that could result in tube leakage and/or tube rupture; (4) The thermal hydraulic phenomena contributing to the fluid-elastic instability is present in both Unit 2 and 3 steam generators; (5) Based on the updated final safety analysis report description of the original steam generators, the steam generators major design changes were appropriately reviewed in accordance with the 10 CFR 50.59 requirements. However, further review is required related to the change in methodology used for the steam generator stress analysis calculations.~~ vibration to occur. Additional on-site inspection will be required to review and closeout the unresolved items.

~~With regard to the radiological release as a result of the tube leak, it was determined that the tube leak was detected by the condenser steam jet air ejector radiation monitor as per design. In addition, the radiation monitor alarmed and alerted SONGS operators of the steam generator tube leak as required. The release resulted in an estimated 0.0000452 (4.52 E-5) mrem dose to the public.~~

TABLE OF CONTENTS


EXECUTIVE SUMMARY ..... - 1 -

SUMMARY OF FINDINGS ..... - 2 -

~~SUMMARY OF FINDINGS~~ ..... ~~1.0~~ Description of Event (Charter Item 1) ..... - 3 -

~~1.0 Description1~~ Sequence of ~~Event (Charter Item 1)~~Events ..... - 3 -

~~1.1 Sequence of Events2~~ System Descriptions ..... - 6 -

~~1.2 System Descriptions~~ ..... ~~1.3~~ Resident Inspectors' Assessment of Steam Generator Tube Leak Event Response ..... - 7 -

~~1.3 Resident Inspectors' Assessment4~~ ....Description of Steam Generator ~~Tube Leak Event Response~~Inspections at SONGS Unit 2 ..... - 11 -

1.4~~5~~ Description of Steam Generator Inspections at SONGS Unit ~~2~~3 ..... - 13 -

~~1.5 Description of Steam Generator Inspections at SONGS Unit 3~~ ..... ~~1.6~~ In-Situ Pressure Testing ..... - 16 -

~~1.6 In-Situ Pressure Testing~~ ..... ~~2.0~~ Probable Cause Evaluation (Charter Item 2) ..... - 19 -

~~2.0 Probable1~~ SONGS Cause Evaluation ~~(Charter Item 2)~~ ..... - 19 -

~~2.1 SCE2~~ Mitsubishi Cause Evaluation ..... - 20 -

~~2.2 Mitsubishi Cause Evaluation~~ ..... ~~3.0~~ Operational Differences in Configuration and Operation Between Unit 2 and 3 (Charter item 3) ..... - 23 -

~~3~~4.0 ~~Operational~~ Design and Manufacturing Differences ~~in Configuration and Operation between Unit 2 and 3~~ ~~(Charter item 3~~Item #4) (Mitsubishi Heavy Industries Charter Item 1) ..... - 25 -

~~4~~5.0 ~~Design and Manufacturing Differences~~ Quality Assurance/Quality Control (Charter Item ~~#4~~5) (Mitsubishi Charter Item ~~1~~4) ..... - 39 -

~~5.0 1~~ SONGS Quality Assurance/Quality Control ~~(Charter Item 5) (Mitsubishi Charter Item 4)~~ ..... - 39 -

~~5.1 SONGS2~~ Mitsubishi Heavy Industries Quality Assurance/Quality Control ..... - 41 -

~~5.2 Mitsubishi 3~~ Quality Assurance~~/Quality Control~~ Conclusion ..... - 43 -

~~5.3 Quality Assurance Conclusion~~ ~~6.0~~
Implementation of Steam Generator Industry Information (Charter Item 6) (Mitsubishi Heavy Industries Charter Item 3) ..... - 43 -

~~6.0 Implementation of Steam Generator Industry Information (Charter Item 6) (Mitsubishi Charter Item 3)~~ ~~7.0~~
Packing, Shipping, Handling, and Receipt Inspection (Charter Item 7)
..... - 46 -

~~7~~8.0 ~~Packing, Shipping, Handling,~~ Thermal-hydraulic and ~~Receipt Inspection~~ Flow Induced Vibration Modeling (Charter Item ~~7~~) ..... - 46 -~~8~~)
..... ~~50~~

8.~~0~~1 Thermal-hydraulic ~~and Flow Induced Vibration Modeling (Charter Item 8)~~ Assessments - 51 -

~~9.0 Risk Assessment (Charter Item 9)~~ ~~8.2~~
NRC ATHOS Results
..... - 55 -

~~10.0 Assess Quality Assurance, Radiological Controls, and Safety Culture Components (Charter Item 10)~~ ~~8.3~~
Conclusion
..... - 61 -

~~11~~9.0 ~~Operational impacts from Unit 3 to Unit 2~~ Risk Assessment (Charter Item ~~11~~9) ..... - 63 -

~~12~~10.0 ~~Divider Plate Manufacturing~~ Assess Quality Assurance, Radiological Controls, and ~~Weld Issues (Mitsubishi~~ Safety Culture Components (Charter Item ~~2~~10) ..... - 63 -

~~13.0 Office of Nuclear Reactor Regulation (NRR) Review of SONGS 50.59 Evaluation~~ ~~11.0~~
Operational Impacts from Unit 3 to Unit 2 (Charter Item 11)
..... - 65 -

~~14.0 Exit Meeting Summary~~ ~~12.0~~
Mitsubishi Divider Plate Manufacturing and Weld Issues (Mitsubishi Heavy Industries Charter Item 2)
..... - 66 -

~~ATTACHMENT 1 SUPPLEMENTAL INFORMATION~~ ~~A1~~ ~~13.0~~
Office of Nuclear Reactor Regulation Review of SONGS 50.59 Evaluation
..... - 71 -

~~ATTACHMENT 2 SEQUENCE OF EVENTS~~ ~~A2~~ ~~14.0~~
Exit Meeting Summary
..... - 73 -

ATTACHMENT 1: SUPPLEMENTAL INFORMATION ..... A1-1

ATTACHMENT 2: SEQUENCE OF EVENTS ..... A2-1

Form:
pt
Form:

**U.S. NUCLEAR REGULATORY COMMISSION**
**REGION IV**

| | |
|---|---|
| Docket: | ~~50-361, 50-362~~05000362 |
| License: | ~~NPF-10, NPF-15~~ |
| Report: | ~~05000361/2012007 and~~ 05000362/2012007 |
| Licensee: | Southern California Edison Company |
| Facility: | San Onofre Nuclear Generating Station~~, Unit 2 and 3~~ |
| Location: | 5000 S. Pacific Coast Hwy<br>San Clemente, California |
| Dates: | March 15 through June 18, 2012 |
| Team Leader: | G. Werner, RIV/Branch Chief/Plant Support Branch 2 |
| Inspectors: | A. Johnson, NRR/Materials Engineer<br>E. Murphy, NRR/Senior Materials Engineer<br>J. Ortega-Luciano, NRO/Reactor Operations Engineer<br>J. Reynoso, RIV/Resident Inspector<br>J. Rivera-Ortiz, RII/Senior Reactor Inspector<br>C. Thurston, RES/Reactor Systems Engineer |
| Approved By: | Elmo E. Collins, Regional Administrator |

## SUMMARY OF FINDINGS

~~IR 05000361/2012007;~~IR 05000362/2012007, 03/15/2012 through 06/18/2012, San Onofre Nuclear Generating Station; Augmented Inspection Team.

An Augmented Inspection Team was approved on March 16, 2012. Two inspectors on the team were onsite observing in-situ pressure testing the week of March 12. The remaining inspectors were dispatched to the site on March 19, 2012, to assess the facts and circumstances surrounding the tube leak and unexpected wear of tubes in Unit 3 steam generators. The Augmented Inspection Team was established in accordance with NRC Management Directive 8.3, "NRC Incident Investigation Program," and implemented using Inspection Procedure 93800, "Augmented Inspection Team." The inspection was conducted by a team of inspectors from the NRC's Region IV and Region II offices, the resident inspector from San Onofre Nuclear Generating Station, one engineer from the NRC Office of New Reactors, two engineers from the NRC Office of Nuclear Reactor Regulation, and one engineer from the NRC Office of Research. The team identified 10 issues that will require additional NRC inspection. These issues are tracked as unresolved items in this report.

A. NRC-Identified and Self-Revealing Findings

None

B. Licensee-Identified Violations

None

## 1.0 Description of Event (Charter Item 1)

### 1.1 Sequence of Events

In November 2001, SCE formed a team to study the viability of replacing the Unit 2 and Unit 3 original steam generators. The licensee performed an assessment of six steam generator vendors, which included vendor benchmarking, development of the replacement steam generator design specifications, a steam generator request for proposal, and a steam generator bid evaluation. In September 2004, the licensee selected Mitsubishi Heavy Industries (Mitsubishi) as the manufacturer of the replacement steam generator.

A general description and comparison of the Unit 2 and Unit 3 steam generators is included in Section 1.2.1 of this report.

In September 2004, Mitsubishi commenced fabrication of Unit 2 steam generators 2E0-89 and 2E0-88, and completed fabrication in April 2008.

At the time of the contract signing in September 2004, Mitsubishi had a quality assurance program in place that had been approved by the licensee, by taking credit for other utilities' reviews of Mitsubishi's quality assurance program. The licensee informed Mitsubishi that once enough fabrication was underway to support an evaluation, the licensee would perform an audit to confirm that their quality assurance program was operating properly.

In November 2004, the licensee performed an audit of the Mitsubishi quality assurance program at their facilities in Kobe, Japan, and then followed up with a surveillance inspection in March 2005. As a result of these two activities, the licensee informed Mitsubishi that additional oversight of Mitsubishi's design control activities was required. The licensee informed Mitsubishi that the additional oversight conditions would remain in place until such time that Mitsubishi had demonstrated improved design control performance, which would be verified by the licensee. After implementing the extra quality control steps, Mitsubishi submitted a letter to SCE stating that they were ready for the conditional qualification to be lifted. The licensee performed followup audits of Mitsubishi in October 2005 and February 2006, but still found enough instances of design control issues that the additional oversight requirements of the conditional qualification were not lifted. In May 2006, SCE was able to verify that Mitsubishi had demonstrated improved design control performance and therefore removed the conditional qualification of Mitsubishi.

After fabrication of the Unit 2 steam generators was complete in April 2008, Mitsubishi performed hydrostatic pressure tests of the primary and secondary sides of the Unit 2 steam generators. In July 2008, after completion of the hydrostatic pressure tests, AREVA performed the baseline eddy current pre-service examinations of the Unit 2 steam generators at the Mitsubishi facilities in Japan. The final inspections for the Unit 2 steam generators were completed in September and October 2008, followed by filling the primary and secondary sides of the Unit 2 steam generators with nitrogen. The Unit 2 steam generators were shipped from the Mitsubishi facilities in December 2008 and received on site at SONGS in February 2009. In July 2009, AREVA performed the

final eddy current pre-service examination on the Unit 2 steam generators at SONGS. The baseline and final eddy current pre-service examinations were performed in Japan and at SONGS, respectively, to assess whether any changes to the steam generator tubing had resulted from shipping, and no changes were identified.

The Unit 2 steam generators were installed during a refueling outage, between September 2009 and April 2010. On April 13, 2010, Unit 2 returned to power operations. NRC ~~engineering~~Engineering inspectors performed inspections in accordance with procedures IP 50001 (Inspection ~~Procedure 50001, "~~50.59), Steam Generator Replacement Inspection~~,"~~ and ~~Inspection Procedure~~IP 71111.17, "Evaluations of Changes, Tests, or Experiments and Permanent Plant Modifications~~." This included a review of selected portions of modifications associated with the replacement steam generators to determine if the changes were done in accordance with 10 CFR 50.59.~~. The results of the ~~inspection~~inspections of the replacement steam generators for Unit 2 are documented in NRC Inspection Report 05000361/2009007. ~~(ML100630838)~~

The fabrication of the Unit 3 steam generators 3E0-89 and 3E0-88 was completed between September 2004 and April 2010. The design specifications of the Unit 2 and Unit 3 steam generators were the same when the contract between the licensee and Mitsubishi was signed; however, due to a fabrication issue, there was a modification to the divider plate-to-channel head weld requirements for the Unit 3 steam generators, and to the classification of the Unit 3 tubesheet material. The specifics of these modifications are discussed further in Section 1.2.a of this report.

In March 2009, after initial fabrication of the Unit 3 steam generators was complete, Mitsubishi performed hydrostatic pressure tests of the primary and secondary sides of the Unit 3 steam generators. After completion of the hydrostatic pressure tests, a visual inspection of the steam generator reactor coolant side revealed cracks in the welds that join the divider plate to the channel head of both steam generators.

From March through July of 2009, Mitsubishi performed a root cause evaluation, which showed that a change in the weld preparation process for the divider plate-to-channel head weld had resulted in the cracking of the weld. A repair procedure was developed and repair work on the Unit 3 steam generators began in June 2009. The repairs to the Unit 3 steam generators were completed in late March (3E0-89) and early April (3E0-88) of 2010. In late April 2010, the Unit 3 steam generators passed the primary hydrostatic pressure re-tests. In June 2010, AREVA performed a final eddy current pre-service examination of the steam generators at the Mitsubishi facilities in Japan, and this was used as the baseline pre-service examination for the Unit 3 steam generators. The steam generators were shipped from the Mitsubishi facilities in Japan in early August 2010, and arrived at SONGS in early October 2010.

The Unit 3 steam generators were installed during a refueling outage, between October 2010 and February 2011. On February 18, 2011, Unit 3 returned to power operations. ~~NRC engineering~~Engineering inspectors performed inspections in accordance with ~~Inspection Procedure~~procedures IP 50001, "Steam Generator Replacement Inspection~~,"~~ and ~~Inspection Procedure~~IP 71111.17, "Evaluations of Changes, Tests, or Experiments and Permanent Plant Modifications~~." This included a review of selected portions of modifications associated with the replacement steam generators to determine if the~~

~~changes were done in accordance with 10 CFR 50.59~~. The results of the ~~inspection~~inspections of the replacement steam generators for Unit 3 are documented in NRC Inspection Report-_05000362/2010009.~~ (ML111390448)~~

Unit 2 was shut down for a scheduled refueling outage on January 10, 2012. Steam generator tubing inspections in steam generator 2E0-89 found unexpected wear caused by retainer bars on two tubes that required plugging in accordance with the technical specifications. Steam generator tubing inspections in steam generator 2E0-88 found wear on four tubes that required plugging in accordance with the technical specifications. Anti-vibration bars caused the wear on two of the tubes and retainer bars caused the wear on the other two tubes. Because of the unexpected wear, the licensee preventatively plugged 94 tubes in steam generator 2E0-89 and 98 tubes in steam generator 2E0-88. Fifteen of the tubes in steam generator 2E0-89 were stabilized prior to plugging, and 18 of the tubes in steam generator 2E0-88 were stabilized prior to plugging. Additional details of the inspections of the Unit 2 steam generators are provided in section 1.4 of this report

On January 31, 2012, Unit 3 control room operators received an alarm that indicated a primary-to-secondary reactor coolant leak from steam generator 3E0-88. The alarm received was from the main condenser air ejector radiation monitors, which continuously samples from a vent line for the purpose of rapidly identifying steam generator tube leaks. Although the leak rate was small, it increased enough in a short period of time for the licensee to perform a rapid shutdown. The estimated leak rate was 75 gallons per day. The facility license allows full power operation with a steady state leak rate of less than 150 gallons per day. On February 2, 2012, Unit 3 reached cold shutdown conditions. The licensee reviewed the amount of gaseous radioactivity released and estimated a dose of approximately 0.0000452 mrem to a member of the public. The annual regulatory limit to a member of the public is 100 mrem per year. This unplanned offsite release of radioactivity was reviewed by Region IV health physicist inspectors who confirmed SONGS' offsite dose estimate (see Section 10 for additional details).

After shutdown, the licensee started preparations for performing inspections of Unit 3 steam generators 3E0-89 and 3E0-88. The steam generator tube inspections commenced on February 12, 2012, and confirmed the location of the leak in steam generator 3E0-88 as coming from the tube in Row 106 Column 78. No other tubes were found to be leaking. The licensee then performed eddy current inspections of 100 percent of the tubes in both Unit 3 steam generators. During these inspections, the licensee discovered unexpected wear in both steam generators, including wear at retainer bars (similar to the wear found in Unit 2 steam generators) and significant tube-to-tube wear in the freespan areas (u-bend area of the tubes). The inspections identified 56 tubes in steam generator 3E0-89 and 73 tubes in steam generator 3E0-88 that SCE performed in-situ pressure testing on to determine if they met the structural integrity requirements in plant technical specifications. Additional details of the inspections of the Unit 3 steam generators are provided in section 1.5 of this report

From March 13 – 21, 2012, AREVA conducted in-situ pressure testing of the suspect tubes in both steam generators. There were a total of eight tube failures during testing, all in steam generator 3E0-88.

These tubes failed to satisfy the tube integrity performance criteria in the technical specifications. Additional details of the in-situ pressure tests are provided in Section 1.6 of this report.

From March 19 – 29, 2012, the NRC augmented inspection team performed inspections onsite at SONGS.

On March 27, 2012, the NRC issued a Confirmatory Action Letter to SCE, which outlined specific actions for each unit that the licensee must complete before restarting Unit 2 and Unit 3.

A more detailed sequence of events can be found in Attachment 2.

1.2 System Descriptions

a. Replacement Steam Generators

The Unit 2 and Unit 3 replacement steam generators contain thermally treated Alloy 690 tubing in a u-bend configuration, with a nominal outside diameter of 0.750 inches and a nominal wall thickness of 0.043 inches. There are 9727 tubes within each steam generator, which are arranged in 142 rows and 177 columns. The rows and columns are arranged in a nominal 1.000 inch triangular pitch (results in approximately 0.25 inches of clearance between tubes). The first thirteen rows of tubes were thermally stress relieved after bending to reduce susceptibility to stress corrosion cracking. The tubes were hydraulically expanded to the full depth of the tubesheet, which has a nominal thickness of 28.19 inches. Seven tube support plates made of Type 405 stainless steel provide lateral support to the tubes. The tube support plates contain broached trefoil holes with chamfered lands. Support of the tubes in the upper bundle is provided by six sets of Type 405 stainless steel, V-shaped, anti-vibration bars.

The original Model 3410 steam generators at Unit 2 and Unit 3 were manufactured by Combustion Engineering. Each steam generator had 9,350 mill-annealed, Alloy 600 tubes, which were a combination of u-bend tubes and tubes with two 90 degree bends (also called square bends). The tubes had a nominal outside diameter of 0.750 inches, and a nominal wall thickness of 0.048 inches. The tubes were expanded through the full depth of the tubesheet using an explosive process, and lateral support was provided by a number of lattice-grid (i.e., eggcrate) carbon steel tube supports. Tube support in the upper bundle was provided by carbon steel diagonal bars (commonly called batwings) and vertical straps. The original steam generators contained a cylindrically shaped support structure beneath the center of the tubesheet (called the stay cylinder) that provided structural support to the large diameter tubesheet.

Southern California Edison reviewed Information Notices, Generic Letters, Bulletins, and industry operational experience associated with steam generator issues when developing the design specifications for the replacement steam generators. Some of the changes are summarized below, for additional information see Section 6 of this report.

The design changes between the original and replacement steam generators noted above are commonly used in replacement steam generators today. The thermally

treated Alloy 690 tubing provides increased resistance to stress corrosion cracking as compared to thermally treated Alloy 600 tubing. The use of type 405 stainless steel (in lieu of carbon steel) for tube support plates eliminates the denting phenomenon associated with drilled carbon steel support plates. The use of broached trefoil holes (instead of drilled holes) in tube support plates reduces the number of contact points with tubes and increases flow area between the tube and tube support plate, thereby reducing the potential for corrosion products to buildup between the tube and the tube support plate. Combustion Engineering steam generators with the batwing design have typically suffered from wear on tubes (from the batwings) in the central stay cylinder region, due to higher cross flow velocities in this portion of the steam generators. In an effort to eliminate this high flow region, the replacement steam generators were designed with a thicker tubesheet that was inherently more rigid, and thus did not require the central stay cylinder. By choosing a design with all u-bend tubes, the bat wing design was eliminated and a new anti-vibration bar assembly was used. The new anti-vibration bar assembly is a free floating design that is supported by the tube bundle and is not attached to the tube bundle wrapper.

b. Channel Head-to-Divider Plate Weld

On March 18, 2009, after completion of the primary and secondary side hydrostatic pressure tests, a crack in the weld between the divider plate and the channel head on Unit 3 steam generator 3E0-88 was identified . Examination showed that the dissimilar metal weld, between the Alloy 690 divider plate and the low alloy steel channel head, had separated. Specifically, the failure occurred between the channel head and the Alloy 152 butter weld, which is the weld filler wire equivalent of Alloy 690. Upon examination, a similar weld failure was found in steam generator 3E0-89 although the size of the failure was not as large.

Mitsubishi performed a root cause evaluation and found that air carbon-arc gouging was used to remove the stainless steel cladding from the channel head, in preparation for making the divider plate-to-channel head dissimilar metal weld. The air carbon-arc gouging had resulted in carbon deposits in the channel head that were not completely removed by grinding that was performed after the gouging operation. The high carbon area increased the hardness of the channel head (due to carburization) and was the most probable cause of the failure between the channel head and the Alloy 152 butter weld. Mitsubishi also found that it was possible, but less probable, that the increased hardness of the channel head promoted hydrogen induced cracking in areas of the divider plate-to-channel head weld that had higher local stresses due to geometric configurations (i.e., at the corner of the divider plate).

1.3 Resident Inspectors' Assessment of Steam Generator Tube Leak Event Response

a. Inspection Scope

On January 31, 2012, the resident inspectors were on-site during the Unit 3 steam generator tube leak event. The resident inspectors observed the licensee's response to the steam generator tube leak from the control room; and observed the rapid shutdown, actions to cool the plant down, actions performed during recovery of plant systems, and other operator actions. Additionally, the resident inspectors conducted a review of

control room activities and equipment response to determine if the operating crew responded appropriately and if the plant systems responded as expected during the event. The resident inspectors conducted interviews with various on-shift personnel and reviewed the post trip report, which included control room logs, operator statements, and plant data trends to assess overall performance of the crew. The review also included procedure use and adequacy of the guidance used for event response, placing the plant in a safe and stable condition, establishing appropriate parameter limits for plant cooldown, and conducting the cooldown to cold shutdown conditions. With respect to operator awareness and decision making, the resident inspectors were specifically focused on the effectiveness of control board monitoring, technical decision making, and work practices of the operating crew. With respect to command and control, the resident inspectors focused on actions taken by the control room supervision in managing the operating crew's response to the event.

b. Observations and Findings

No findings were identified.

The team identified one unresolved item for which additional information is required to determine if performance deficiencies exist or if the issue constitutes a violation of NRC requirements.

On January 31, 2012, at 3:05 p.m. (PST), main control room operators at Unit 3 received a secondary plant system radiation alarm associated with the air ejectors followed by a blowdown radiation monitor alarm. Operations personnel responded in accordance with Abnormal Operating Instruction SO23-13-14, "Reactor Coolant Leak," Revision 16, since the entry conditions for a steam generator tube leak were satisfied. Operations personnel determined the leakage to be about 75 gallons per day, using a mass balance calculation (.06 gpm), from steam generator 3E0-88. This leak rate was below the Technical Specification 3.4.13, "RCS Operational Leakage," limit of 150 gallons per day for primary- to-secondary leakage through any one steam generator.

At 4:10 p.m., operations personnel evaluated that the primary-to-secondary leak rate exceeded 75 gallons per day on steam generator 3E0-88 and that the leak was increasing at greater than 30 gallons per day per hour, and consequently, initiated a rapid power reduction to be ≤ 50 percent power in one hour and in Mode 3 within the next two hours per Abnormal Operating Instruction SO23-13-14. In accordance with Abnormal Operating Instruction SO23-13-14, when reactor power was less than 35 percent, operations personnel tripped the reactor at 5:31 p.m. to enter Mode 3.

Due to the manual reactor trip, operations personnel entered Emergency Operating Instruction SO23-12-1, "Standard Post Trip Actions," Revision 26, to ensure the plant was placed in a stable, safe condition, and that the plant was configured to respond to the continuing steam generator tube leak event. Operations personnel implemented the emergency operating instructions and isolated the affected steam generator at 6:00 p.m. A plant cooldown was conducted by using main steam bypass from steam generator 3E0-89 to the main condenser. Mode 4 conditions were achieved at approximately 6 hours after isolation of the steam generator. Cooldown continued until Unit 3 was in Mode 5, cold shutdown.

The resident inspectors concluded that abnormal and emergency operating instructions were performed consistent with expected standards and that operations personnel exhibited the fundamental operator competencies in response to the Unit 3 steam generator tube leak event.

Specifically, the resident inspectors determined that the operating crew displayed a questioning attitude of changing plant parameters and took conservative actions. The operating crew identified important preliminary increasing trends of Unit 3 air ejectors radiation monitors and subsequent alarms in a timely manner for a tube leak in steam generator 3E0-88. Additionally, the resident inspectors determined that crew supervision exercised effective oversight of plant status, crew performance, and control room command and control.

(1) Introduction: The team identified an unresolved item associated with Operations Procedure SO123-0-A8, "Trip/Transient and Event Review," that required a formal review of operator actions and safety systems to determine if important systems responded as design. The formal review was not completed.

Description: On March 19, 2012, the team requested to review the results of operations post trip/transient evaluation of the January 31, Unit 3 tube leak event. Operations Procedure SO123-0-A8, "Trip/Transient and Event Review," Revision 8, required a detailed post trip review following unplanned reactor trips. However, a formal trip/transient and event review was not available because operations personnel determined the Unit 3 event was planned and therefore a formal review was not required.

On March 27, 2012, Team met with operations personnel to discuss items on a draft Unit 3 trip/transient evaluation provided to the team. The team also discussed with operations personnel the requirements in Operations Procedure SO123-0-A8, and concluded a basis for what was "planned" and "unplanned" was not defined. Operations personnel determined the Unit 3 reactor trip was a planned reactor trip because Abnormal Operating Instruction SO23-13-14, "Reactor Coolant Leak," Revision 16, Section 4, had described actions for primary-to-secondary leakage. Specifically, this section stated, in part, under plant conditions of increasing steam generator tube leakage, operations personnel were required to perform a rapid power reduction to less than 35 percent power, then trip the reactor.

The team discussed with operations personnel that definitions for unplanned events have been established through industry standards to report on plant performance. These standards include NEI 99-02, "Regulatory Assessment Performance Indicator Guideline," Revision 6. Industry Guidance NEI 99-02 indicated that Unit 3 reactor trip should be considered unplanned since the reactor trip was required by an abnormal operating instruction and would count against the performance indicator for unplanned reactor trips. NRC Regulatory Issue Summary (RIS) 2000-08, "Voluntary Submission of Performance Indicator Data," Revision 1, allows industry to use NEI 99-02 to report performance indicator data.

Additional review and follow up will be required to review the corrective actions associated with the procedural guidance for an event review and then determine whether this issue represents a performance deficiency or constitutes a violation of NRC requirements. This issue is identified as URI 05000362/2012007-01, "Adequacy of the Trip/Transient and Event Review Procedure."

~~c. Conclusions~~

~~The resident inspectors concluded that abnormal and emergency operating instructions were performed consistent with expected standard and that operations personnel exhibited the fundamental operator competencies in response to the Unit 3 steam generator tube leak.~~

~~Specifically, the resident inspectors determined that the operating crew displayed a questioning attitude of changing plant parameters and took conservative actions. The operating crew identified important preliminary increasing trends of Unit 3 air ejectors radiation monitors and subsequent alarms in a timely manner for a tube leak in steam generator 3E0-88. Additionally, the resident inspectors determined that crew supervision exercised effective oversight of plant status, crew performance, and control room command and control.~~

~~The team identified one unresolved item associated with the adequacy of the trip/transient procedure.~~

1.4 Description of Steam Generator Inspections at SONGS Unit 2

On January 10, 2012, SONGS Unit 2 was shutdown for a refueling outage. Southern California Edison personnel conducted a scheduled steam generator inspection in accordance with Technical Specification ~~5.5.2.11~~6.6.9, "Steam Generator (SG) Program." This was the first inspection of the Unit 2 steam generators since their replacement in January 2010. The accumulated operating time on the replacement Unit 2 steam generators was 1.7 effective full power years. There was no reported primary-to-secondary leakage at the time of shutdown.

The scope of the inspection included a 100 percent tube sample with an eddy current test bobbin probe over the full tube length, followup rotating coil inspections at special interest locations, and a secondary side foreign object search and retrieval. Three types of flaw indications were found in the tubes:

- Wear at the tube support plate and anti-vibration bar supports
- Wear caused by a loose part
- Wear at retainer bars

With the exception of the wear indications found at tube retainer bar locations, the wear indications found are similar to those found at other replacement steam generators after one cycle of operation. A total of 2411 tubes were found with indications at the tube support plates and anti-vibration bar supports, the vast majority of which had a measured depth of less than 20 percent of the tube wall thickness. Only two of these indications, located at the anti-vibration bar supports, exceeded the Technical Specification ~~5.5.2.11~~6.6.9.c repair limit of 35 percent of the tube wall thickness. The two affected tubes plus two additional tubes with 31 percent deep indications were stabilized and plugged.

Southern California Edison performed a reanalysis of the bobbin probe eddy current data collected during the Unit 2 inspection program. This reanalysis was performed after the finding of the long free-span indications in Unit 3, allowing insights gained during the Unit 3 inspections to be applied to the Unit 2 data. The scope of this reanalysis was a "box" of 1000 tubes in each Unit 2 steam generator which bounded the region of tubing affected by the instability damage in Unit 3. This reanalysis~~, using the bobbin probe,~~ confirmed the results of the original analysis and did not identify any tube-to-tube wear.

Two tubes were found with indications (less than 35 percent through wall) caused by a small loose part on the secondary side. This loose part was removed from the steam generator. Metallurgical analysis indicated the loose part was a piece of weld metal, most likely introduced during steam generator manufacturing operations. The two affected tubes were left in service.

Six tubes were found with indications at retainer bar intersections. The retainer bars are part of the support structure for the anti-vibration bars and are a unique feature of steam generators manufactured by Mitsubishi. The measured indication depths ranged from 28 to 90 percent of the tube wall thickness. Because of the short measured lengths of these flaws, only the 90 percent indication was in-situ pressure tested as part of condition monitoring. The affected tube was successfully pressurized to 5300 psi with no leakage, confirming that the Technical Specification ~~5.5.2.11.b.1 structural~~6.6.9.b tube integrity performance criteria were met. Mitsubishi attributed the cause of these indications to retainer bar vibration, the potential for which had not been evaluated during design (see Section 4 ~~of this report for additional details).~~ for additional details). Fort Calhoun is the only other domestic plant with Mitsubishi steam generators. The retainer bars at Fort Calhoun are significantly stiffer than at SONGS.

The six tubes with retainer bar indications have been plugged and stabilized. In addition, the remaining 182 tubes (total for both Unit 2 steam generators) that intersect the retainer bars were plugged as a preventive measure. Twenty four of these tubes were stabilized prior to plugging to ensure that all 188 plugged tubes will not sever due to continued vibration of the retainer bar. The tubes that were stabilized are strategically located at each end and center of the retainer bars.

Detailed plans for returning Unit 2 to service are still under development. Short-term plans relating to Unit 2 included conducting a full u-bend examination of 1375 tubes in both steam generators using a rotating coil. The tube sample was intended to ~~bound~~totally box-in the region affected by free-span wear seen in Unit 3 by significant margin. The rotating coil provides a slightly more sensitive inspection for long free-span wear scars than the bobbin probe. These inspections were performed subsequent to the team's site visit and identified two tubes in Unit 2 steam generator 2E0-89 with shallow free-span wear in the u-bend region. These indications both measured approximately 14 percent deep, and were located in the same region of the bundle affected by free-span indications in the Unit 3 steam generators.

The tube wear data for Unit 2 is shown below.

**~~SONGS Unit 2 Steam Generators~~**

**Wear Depths Summary**

| Steam Generator SG2E88 ~~(Through-Wall Wear)~~ | Anti-Vibration Bar | Tube Support Plate | U-Bend Freespan | Retainer Bar | Foreign Object | Total ~~Indication~~s | ~~Tubes with Indications~~ |
|---|---|---|---|---|---|---|---|
| TW* ≥ 50% | 0 | 0 | 0 | 1 | 0 | 1 | ~~1~~ |
| 35 - 49% | 2 | 0 | 0 | 1 | 0 | 3 | ~~3~~ |
| 20 - 34% | 86 | 0 | 0 | 0 | 2 | ~~868~~ 88 | ~~74~~ |
| 10 - 19% | 705 | 108 | 0 | 0 | 0 | 813 | ~~406~~ |
| TW < 10% | 964 | 117 | 0 | 0 | 0 | 1081 | ~~600~~ |
| TOTAL | 1757 | 225 | 0 | 2 | 2 | ~~198~~ 419 86 | ~~734*~~ |

*Through Wall

| Steam Generator SG2E89 ~~(Through-Wall Wear)~~ | Anti-Vibration Bar | Tube Support Plate | U-Bend Freespan | Retainer Bar | Foreign Object | Total ~~Indication~~s | ~~Tubes with Indications~~ |
|---|---|---|---|---|---|---|---|
| TW ≥ 50% | 0 | 0 | 0 | 1 | 0 | 1 | ~~1~~ |
| 35 - 49% | 0 | 0 | 0 | 1 | 0 | 1 | ~~1~~ |
| 20 - 34% | 78 | 1 | 0 | 3 | 0 | 82 | ~~67~~ |
| 10 - 19% | 1014 | 85 | 2 | 0 | 0 | 1101 | ~~496~~ |
| TW < 10% | 1499 | 53 | 0 | 0 | 0 | 1552 | ~~768~~ |
| TOTAL | 2591 | 139 | 2 | 5 | 0 | **2737** | ~~861*~~ |

~~*This value is the number of tubes with wear indications of any depth and at any location. Since many tubes have indications in more than one depth and location, the total number of tubes is less than the total number of indications.~~

1.5 Description of Steam Generator Inspections at SONGS Unit 3

After shutdown, the licensee started preparations for performing inspections of Unit 3 steam generators 3E0-89 and 3E0-88. The steam generator tube inspections

commenced on February 12, 2012, and confirmed the location of the leak in steam generator 3E0-88 as coming from the tube in Row 106 Column 78. The leak was located 2 inches beyond anti-vibration support number 4 on the hot leg side. It was found to be associated with a long (approximately 30 inches) free-span flaw indication. No other tubes were found to be leaking.

The licensee then performed eddy current inspections of 100 percent of the tubes, full length, in both Unit 3 steam generators with a bobbin probe. The bobbin probe examinations were supplemented by rotating coil examinations to confirm, characterize, and size the indications found by the bobbin probe. These examinations identified over 160 tubes in each steam generator with long free-span indications similar to that found on the leaking tube. In each steam generator, the tubes containing the free-span indications were grouped together in a tightly packed zone near the center of the tube bundle. The free-span indications were located on the upper and/or lower sides (i.e., the extrados and intrados) of the u-bend. Thus, a given free-span indication on the extrados of one tube tended to be matched by a similar indication on the intrados of the adjacent higher row tube located in the same tube column. This pattern provided early evidence to SCE personnel that the free-span indications were wear flaws due to tube-to-tube contact from motion of the u-bends within the plane of the u-bends. More than half of the free-span indications in each steam generator had maximum measured depths exceeding the 35 percent plugging limit in the technical specifications, and ranged to as much as 99 percent (for the non-leaking tubes).

Over 460 tubes in each steam generator were found with wear indications at the tube support plates. In general, tubes exhibiting the free-span wear indications tended to exhibit tube support plate indications with the highest depth measurements, typically with the deepest values at the seventh tube support plate and trending down at successively lower support levels. Approximately 170 tubes in each steam generator exhibited indications at the tube support plates that exceeded the 35 percent plugging limit, with maximum depths ranging to 70 percent.

Approximately 800 tubes in steam generator 3E0-88 and 900 tubes in steam generator 3E0-89 exhibited wear indications at the anti-vibration bar supports. Most of these measured less than 20 percent deep, and only 2 indications exceeded the 35 percent plugging limit. For tube indications at anti-vibration bars in tubes not exhibiting free-span u-bend indications, the length of the wear indications was confined to within the width of the anti-vibration bars. This was also true in SONGS Unit 2. For tubes that exhibited free-span indications, many of these tubes had wear indications at the anti-vibration bars that extended outside the width of the anti-vibration bars which indicated in-plane movement of these tubes in the u-bend area.

Four tubes were found with indications at retainer bar intersections, with measured depths ranging from 28 to 46 percent. At the time of the team's presence at the site, planned corrective actions with respect to tubes adjacent to the retainer bar were similar to those completed for Unit 2. The four tubes with retainer bar indications were plugged and stabilized. In addition, the remaining 184 tubes (total for both Unit 3 steam generators) that intersect the retainer bars were plugged as a preventive measure. Twenty four of these tubes were stabilized prior. The tubes that were stabilized are strategically located at each end and center of the retainer bars.

Tube wear data for Unit 3 is shown below.

~~SONGS Unit 3 Steam Generators~~Wear Depths Summary

~~Wear Depths Summary~~

| Steam Generator SG3E88 ~~(Through-Wall Wear)~~ | Anti-Vibration Bar | Tube Support Plate | Tube-to-Tube Wear | Retainer Bar | Foreign Object | Total ~~Indications~~ | ~~Tubes with Indications~~ |
|---|---|---|---|---|---|---|---|
| TW ≥ | | | | | | | ~~74~~ |
| 50% | 0 | 117 | 48 | 0 | 0 | 165 | |
| 35 - 49% | 3 | 217 | 116 | 2 | 0 | 338 | ~~119~~ |
| 20 - 34% | 156 | 506 | 134 | 1 | 0 | 797 | ~~197~~ |
| 10 - 19% | 1380 | 542 | 98 | 0 | 0 | 2020 | ~~554~~ |
| TW < | | | | | | | ~~817~~ |
| 10% | 1818 | 55 | 11 | 0 | 0 | 1884 | |
| TOTAL | 3357 | 1437 | 407 | 3 | 0 | **5204** | ~~919*~~ |

| Steam Generator SG3E89 ~~(Through-Wall Wear)~~ | Anti-Vibration Bar | Tube Support Plate | Tube-to-Tube Wear | Retainer Bar | Foreign Object | Total ~~Indications~~ | ~~Tubes with Indications~~ |
|---|---|---|---|---|---|---|---|
| TW ≥ | | | | | | | ~~60~~ |
| 50% | 0 | 91 | 26 | 0 | 0 | 117 | |
| 35 - 49% | 0 | 252 | 102 | 1 | 0 | 355 | ~~128~~ |
| 20 - 34% | 45 | 487 | 215 | 0 | 0 | 747 | ~~175~~ |
| 10 - 19% | 940 | 590 | 72 | 0 | 0 | 1602 | ~~450~~ |
| TW < | | | | | | | ~~838~~ |
| 10% | 2164 | 94 | 1 | 0 | 0 | 2259 | |
| TOTAL | 3149 | 1514 | 416 | 1 | 0 | **5080** | ~~887*~~ |

~~*This value is the number of tubes with wear indications of any depth and at any location. Since many tubes have indications in more than one depth and location, the total number of tubes is less than the total number of indications.~~

Detailed plans for satisfying the provisions of the NRC March 27, 2012, Confirmatory Action Letter for SONGS Unit 3 were not available and were still being developed.

1.6 In-Situ Pressure Testing

Technical Specification 5.5.~~2.11~~9.a for SONGS Units 2 and 3 requires that a condition monitoring assessment be performed during each outage that the steam generator tubes are inspected or plugged to confirm that the tube integrity performance criteria are being met. These performance criteria include ~~specific requirements~~standard criteria for ~~tube~~ structural integrity and accident ~~induced~~ leakage integrity. The limiting structural criterion applicable to the SONGS Units 2 and 3 is the normal steady state pressure differential across the tubes times a safety factor of three. The limiting accident ~~induced~~ leakage criterion is 0.5 ~~gpm~~gallons per minute under main steam ~~generator~~line break conditions.

Typically, the requirement for performing condition monitoring is satisfied by analyzing eddy current flaw indications relative to screening criteria that are functions of measured flaw depth, length, and/or eddy current voltage response. These screening criteria are conservative relative to the performance criteria since they make allowance for eddy current measurement error, uncertainties with respect to voltage correlations with flaw depth and burst strength, and material property variability. When these screening criteria are exceeded, in-situ pressure tests may be performed for tubes not meeting the screening criteria to confirm that the performance criteria are met for these tubes. In-situ pressure test procedures at SONGS and the screening criteria for selecting tubes to be tested were in accordance with Electrical Power Research Institute Report 1014983, "Steam Generator In-Situ Pressure Test Guidelines," Revision 3.

At Unit 2, one tube with a measured 90 percent deep indication at a retainer bar location was determined to be outside the screening criteria and was in-situ pressure tested. For Unit 3, an optional strategy to the screening criteria approach was taken in accordance with the Steam Generator In-Situ Pressure Test Guidelines, Appendix A. The Appendix A approach is a statistically based Monte Carlo approach that samples the uncertainty distributions associated with each of the input parameters for calculating tube burst pressure. This methodology selects all tubes determined to have a 0.95 probability or less of meeting the limiting structural integrity performance criterion. Application of this methodology led to selection of 129 tubes on Unit 3 for in-situ pressure testing, 73 tubes in steam generator 3E0-88 and 56 tubes in steam generator 3E0-89.

The in-situ pressure tests were performed under ambient conditions. Therefore the test pressures were adjusted upward from actual values under hot conditions to account for the increased yield and ultimate strength of the tube material under ambient conditions. The test pressures (with correction factors added) corresponding to normal operating conditions, main steam line break, and three times normal operating pressure differential were 1850 psi, 3200 psi, and 5300 psi, respectively.

The test procedure involved pressurizing the subject tube at a rate not to exceed 200 psi/sec to each test point. At each test point, pressure was held constant for two minutes if the tube was not leaking. If the tube was leaking, pressure was held constant for five minutes before ramping to the next test pressure.

The tube with a 90 percent deep retainer bar indication in Unit 2 was successfully tested to 5300 psi with no leakage. This demonstrated that all performance criteria were met

for this tube. For Unit 3, 136 of the 144 tubes were successfully tested to 5300 psi with no leakage, demonstrating that these tubes met the performance criteria. The remaining eight tubes "failed" prior to reaching 5300 psi. Failure in this context means that leakage occurred in excess of the 4.5 gallons per minute pump capacity during the test, and test pressure could not be maintained. All eight tubes that failed were in steam generator 3E0-88. All tubes tested in steam generator 3E0-89 passed with no leakage.

Table 1 summarizes the in-situ pressure test results for the eight tubes that failed the test. Three of the eight tubes failed at or below the test pressure corresponding to main steam line break differential pressure. The tube that leaked causing shutdown of SONGS Unit 3 (row 106, column 78) exhibited the lowest failure pressure, 2874 psi. The three tubes that failed at or below main steam line break pressure failed to meet the accident leakage performance criteria as well as the structural integrity performance criteria. The other five tubes met the accident leakage criteria, but failed to meet the structural criteria.

Prior to being tested to failure, the tube that leaked during operation (row 106, column 78) exhibited a measured leak rate of 0.072 gallons per minute at a test pressure corresponding to normal operating conditions. This compares with a leak rate of 0.06 gallons per minute measured by SCE operating staff for SONGS Unit 3 when they made the decision to shut the plant down. The reported operational leakage was evaluated based on ambient conditions. Both the operational and test measurements are less than the applicable technical specification limit of 0.1 gallons per minute.

Table 1 – SONGS 3 In-Situ Pressure Test Results

| SG | Row | Column | Leak Rate at Normal Operating Conditions (gpm) | Leak Rate at Main Steam Line Break (gpm) | Failure Pressure (psi) |
|---|---|---|---|---|---|
| 88 | 106 | 78 | 0.072 | >0.5 | 2874 |
| 88 | 102 | 78 | 0 | >0.5 | 3268 |
| 88 | 104 | 78 | 0 | >0.5 | 3180 |
| 88 | 100 | 80 | 0 | >0.5 | 4732 |
| 88 | 107 | ~~77~~87 | 0 | >0.5 | 5160 |
| 88 | 101 | 81 | 0 | >0.5 | 4889 |
| 88 | 98 | 80 | 0 | >0.5 | 4886 |
| 88 | 99 | 81 | 0 | >0.5 | 5026 |

2.0 Probable Cause Evaluation (Charter Item 2)

While the team was on-site, both SCE and Mitsubishi were in the process of conducting cause evaluations for the tube ~~failures~~failure and unexpected wear of steam generator tubes in Unit 3. As part of both evaluations, actions were being taken to understand the differences between Unit 2 and 3 steam generators. The cause evaluations were not complete and were undergoing changes while the Augmented Inspection Team was onsite; however, SCE did subsequently complete their cause evaluation prior to the team's exit meeting. The team did a detailed review of the completed cause evaluation.

2.1 ~~SCE~~SONGS Cause Evaluation

a. Inspection Scope

The team conducted an overall and independent review of SCE's actions taken to understand the probable cause for the steam generator tube degradation. The team reviewed the updated final safety analysis report, technical specifications, design basis documents, original steam generator design, replacement steam generator design, purchase order specifications, design changes, manufacturing changes, nonconformance reports, supplier deviation reports, and interviewed personnel. The review included understanding the licensee's criteria for determining the cause, or if one could not be determined, the most probable cause.

b. Observations and Findings

No findings were identified.

The team participated in discussions with the licensee's cause analysis team and noted that the licensee employed various root cause evaluation techniques. These included a change analysis technique that compared design differences and a problem analysis technique relying on a systematic process that looked at the causal effects and risk assessments of possible causes. The team reviewed the licensee causal analysis summary that assigned a ranking of highly probable to unlikely.

In the area of thermal hydraulic analysis the licensee contracted AREVA to verify the accuracy of Mitsubishi's thermal-hydraulic code (FIT III) used during the design of the replacement steam generators, by comparing it to ATHOS, a thermal-hydraulic code developed by the Electric Power Research Institute (EPRI). In addition, SCE contracted Westinghouse to perform a completely independent analysis using a Westinghouse modified ATHOS thermal-hydraulic code. AREVA also performed independent flow induced vibration analyses. The licensee brought on board MPR associates and numerous other technical experts, including a world renowned expert in flow induced vibration, to assist in the cause assessment. The team observed that SCE preliminary causal analysis was generally consistent with that of Mitsubishi. Initially, the licensee reviewed the following cause contributors:

- Departure from original steam generator u-bend/anti-vibration bar configuration -

highly probable
- Departure from original steam generator stay cylinder configuration - possible
- Departure from original steam generator tube support plate configuration - possible
- Replacement steam generator anti-vibration bar structure too flexible - possible
- Additional 300 rotations of Unit 3 replacement steam generator due to divider plate repair work - possible
- Thermal-hydraulic and flow induced vibration models used in replacement steam generator design incorrectly predicted replacement steam generator tube bundle behavior – possible

The team observed that the licensee performed a detailed analysis and attempted to address all probable causes. The team observed that some of the conditions which were eliminated as potential contributors may need further evaluation. In particular, the team ~~determined~~believed that the only major difference between Units 2 and 3 was the divider plate repair to both Unit 3 steam generators. This difference had been discounted by both SCE and Mitsubishi. The divider plate is further discussed in Section 12.0 of this report.

~~c. Conclusions~~

The completed SCE cause evaluation identified the mechanistic cause of the tube-to-tube wear as fluid-elastic instability caused by a combination of localized high steam/water velocity, high steam void fraction, and insufficient contact forces between the anti-vibration bars and the tubes. The Mitsubishi thermal/hydraulic model under-predicted the actual thermal/hydraulic conditions in the steam generator and improvements in fabrication between Unit 2 and Unit 3 steam generators led to the reduced contact forces.

2.2 Mitsubishi Cause Evaluation

Form

a. Inspection Scope

The team conducted an overall and independent review of Mitsubishi's actions taken to understand the probable cause of the steam generator tube degradation. While onsite, the inspection team was informed that Mitsubishi was performing a failure analysis to characterize the mechanism causing the tube-to-tube wear condition in Unit 3. The team had periodic discussions with Mitsubishi personnel to gather information on the probable causes under consideration. The team reviewed information contained in the updated final safety analysis report, technical specifications, design basis documents, purchase order specifications, design changes, design drawings, manufacturing changes, nonconformance reports, and supplier deviation reports to understand the design and fabrication of the replacement steam generators and independently assess the information obtained from Mitsubishi's in-progress cause evaluation.

b. Observations and Findings

No findings were identified.

The team determined that Mitsubishi was performing a thorough evaluation of the failure mechanism leading to the tube-to-tube wear in Unit 3. The team noted that Mitsubishi gathered factual information about the design, fabrication, and operation of the replacement steam generators in Unit 2 and Unit 3 to understand the differences between these components and identify potential contributing causes. The team discussed the preliminary failure mechanism theory with Mitsubishi personnel, who attributed the tube-to-tube; wear to a combination of design, fabrication, and operational factors.

Mitsubishi's preliminary explanation of the failure mechanism started with the combination of two factors: (1) a relatively small tube pitch to tube diameter ratio (P/D), and (2) high void fraction in the tube bundle area where the tube-to-tube wear was identified. The small pitch to diameter ratio was a fixed parameter in the replacement steam generators established by the nominal center-to-center distance between adjacent tubes (P) and the nominal outside diameter of the tubes (D). The high void fraction was identified from the results of Mitsubishi's thermal-hydraulic model for the secondary side of the replacement steam generators. Mitsubishi considered that the combination of these two factors may have resulted in favorable conditions for in-plane tube vibration based, in part, on the results of recent studies in fluid-elastic instability.

Additionally, Mitsubishi identified that the Unit 3 replacement steam generators had better dimensional controls during the fabrication process. This determination was based, in part, on the results of pre-service and in-service eddy current examinations, and fabrication data from Unit 2 and Unit 3 replacement steam generators. The correlation of dimensional controls with the failure mechanism was that improved dimensional controls for Unit 3 replacement steam generators resulted in less variability of as-built critical dimensions such as anti-vibration bar thickness, tube roundness, and gaps between tubes and anti-vibration bars. Condition Report 201836127, Cause Evaluation, Revision 0, lists one of the mechanistic causes of the tube-to-tube wear to be associated with the reduction in dimensional variability that resulted in less contact force between the tubes and the anti-vibration bars.

The failure mechanism model also considered a fluid dynamic effect associated with the spreading of the tubes in the U-bend region during normal operating conditions. This effect was informally referred to as "flowering," due to the characteristic shape in which the tube bundle spreads transverse to the plane of the u-bends at normal operating conditions. "Flowering" was described as the elastic deformation of the anti-vibration bar structure and the tube bundle in the U-bend region, as a result of thermal expansion and fluid dynamic pressure acting on the secondary side of the tubes (see figure below). The deformation caused by the "flowering" effect was believed to result in multiple areas of no contact between the anti-vibration bars and the tubes, which minimized resistance to in-plane motion of the u-bend area of the tubes.

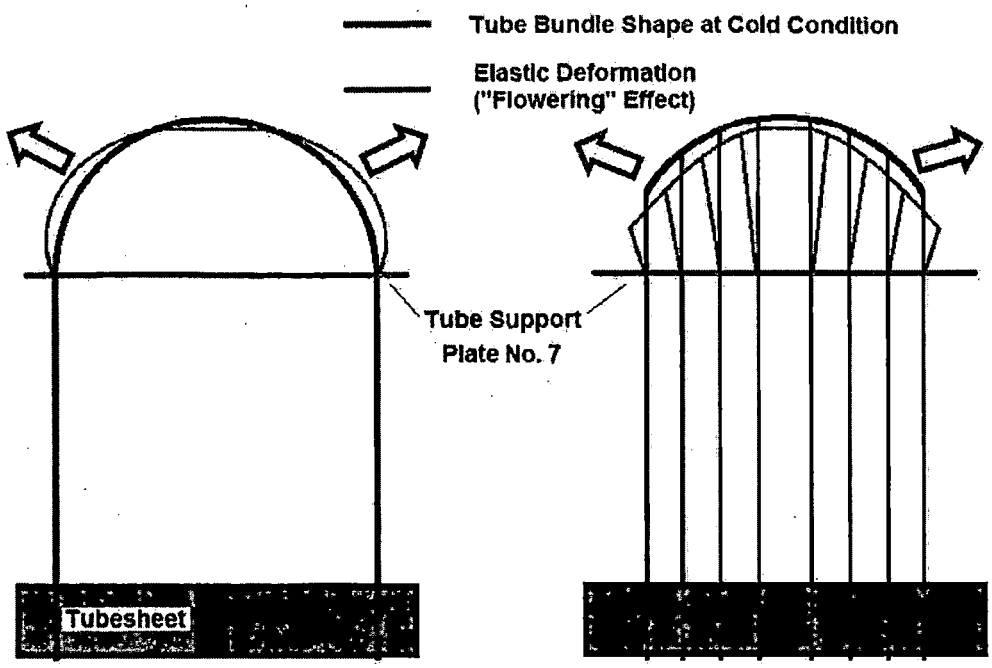


Description of "Flowering" Effect (Conceptual Drawing – For Illustration Purposes Only) Form

Mitsubishi considered that the collective contribution of the factors described above resulted in conditions in the U-bend that were highly susceptible to excessive tube vibration. The in-plane vibration of the tubes in the U-bend region allowed direct contact between free-span sections of the tubes, resulting in the unanticipated tube-to-tube wear.

At the conclusion of the onsite portion of this inspection, Mitsubishi was further evaluating the failure mechanism by conducting in-depth analyses of available data to validate their failure mechanism theory. One of the analyses included analytical studies of the impact of anti-vibration bar gap size, free-span length, fluid-elastic vibration, and contact forces on tube wear depth. An expected outcome of this analysis was that contact forces and the number of inactive supports should be the biggest contributors to wear under fluid-elastic instability conditions. Additionally, Mitsubishi was conducting further analytical studies of the "flowering" effect by modeling multiple cases of elastic displacement of the tube bundle structure, taking into consideration thermal expansion and dynamic pressures. Concurrent with these analyses, Mitsubishi was studying the effect of manufacturing dispersion on tube wear. Specifically, Mitsubishi was modeling multiple cases of manufacturing variability to study the influence of different dimensional controls on gap and contact forces. Mitsubishi was using as-built data as well as manufacturing tolerances to statistically assess the impact of dimensional controls on the resulting gaps and contact forces in different areas of the tube bundle. ~~Based on the data reviewed by the team, the standard deviation of the tube ovality (G-value) decreased during each successive fabrication run of the steam generator tubes (order of tube fabrication -> U2E0-89, U2E0-88, U3E0-89, and U3E0-88).~~ One of the expected

outcomes of this analysis was that manufacturing variability in Unit 3, in combination with the "flowering" effect, would result in a reduction of contact forces in Unit 3 relative to those in Unit 2. During the on-site portion of this inspection, the results of these studies were not finalized and additional failure analysis tasks were scheduled to accurately characterize the failure mechanism and support the cause determination.

~~c. Conclusions~~

At the time of the exit, Mitsubishi was still completing their independent cause analysis. ~~The team was unable to evaluate this aspect; however~~As part of the Confirmatory Action Letter inspection, the final Mitsubishi cause evaluation will be reviewed ~~as part of the Confirmatory Action Letter inspection. No conclusions were reached with regard to the Mitsubishi cause evaluation at this time.~~

3.0 Operational Differences in Configuration and Operation between Unit 2 and 3 (Charter item 3)

a. Inspection Scope

The team reviewed Unit 2 and 3 Cycle 16 operational data records found in operator logs and the plant computer system. The team focused on differences in configuration and operation between Units 2 and 3. The team evaluated full power operational data between Unit 2 and Unit 3 steam generators after each were replaced. From this data the team compared key plant parameters and other indications such as temperature, flow, power, pressure, and vibration and loose parts monitoring alarms. The team reviewed operational differences between Units 2 and 3 in order to gain information and to assess if these differences could have had an impact on the observed differences in the steam generator tube wear between the units.

b. Observations and Findings

~~The team~~ No findings were identified ~~one unresolved item for which additional information is required to determine if~~.

The team looked at a ~~performance deficiency exists or if the issue constitutes a violation of NRC requirements. The team also modeled the impact~~ number of operational differences ~~on~~from the ~~predicted~~perspective of the thermal-hydraulic disparities. The team also evaluated the significance of these differences insofar as potential impact to tube degradation. It was noted that Unit 3 ran with slightly higher primary temperatures, about 4°F higher than Unit 2. Other differences were noted in steam and feedwater flow but none~~response~~ of the differences were considered sufficient to significantly affect thermal hydraulic characteristics inside the steam generators.— In addition, the team also identified that Unit 3 steam generators had numerous valid vibration and loose parts monitoring system alarms compared to Unit 2 steam generators.

(1) Introduction: The team identified an unresolved item associated with the number of valid vibration and loose parts alarms observed in Unit 3 steam generators compared to Unit 2 steam generators, during steady state conditions.

Description: During the review of operational differences between Unit 2 and 3 steam generators the team identified a significant difference in number of valid vibration and loose parts monitoring system alarms. The vibration and loose parts monitoring system was designed to provide continuous monitoring and conditioning of loose parts accelerometer signals. Two separate accelerometers were installed on each of the steam generators. The location of these instruments are on the steam generators' lower supporting structures and provide acoustic information about loose parts impacts specifically on the reactor coolant or primary side of the steam generators. The vibration and loose parts monitoring system real time functions consist mainly of impact alarm validation of suspected loose part events and recording acoustic data. Long term vibration monitoring and loose part event trending were done by engineering personnel using recorded data.

Unit 3 returned to service in February 2011, and the resident inspectors noted a number of nuclear notifications associated with Unit 3 steam generators vibration and loose parts monitoring alarms. On January 20, 2012, prior to the Unit 3 tube leak, engineering personnel also identified this trend and documented in Nuclear Notification NN 201818719 this problem and assigned an action to do further evaluation. On February 3, 2012, engineering personnel sent two sets of alarm signatures to Westinghouse, which contained impact data on alarms for time periods of steady state operation (i.e., no major temperature changes). Westinghouse engineering personnel concluded that the acoustic signals picked up by the accelerometers were valid and similar in nature to acoustic signatures caused by thermal movement of a steam generator expected during changes in thermal conditions, such as plant startup or shutdown. However the data obtained and analyzed had been taken during steady state operations. The team noted that Unit 2 steam generators did not receive the same number and type of alarms during a similar period of steady state operations. Engineering personnel also compared hot leg temperature changes linked to Unit 3 operations from February 18, 2011, to January 31, 2012, and confirmed about 30 valid alarms during this period were not associated with thermal transients.

Additional review and follow up will be required of the vibration and loose parts monitoring system alarms, including evaluation and disposition of Unit 3 alarms and then determine whether this issue represents a performance deficiency or constitutes a violation of NRC requirements. This issue is identified as URI 05000362/2012007-02, "Evaluation of Unit 3 Vibration and Loose Parts Monitoring System Alarms."

(2) ~~Operational Differences~~Introduction: The team performed a number of different thermal-hydraulic analysis of Units 2 and 3 steam generators. The output of the various analyses runs where then compared and reviewed to determine if those differences could have contributed to the significant change in steam generator tube wear. ~~It was noted that Unit 3 ran with slightly higher primary temperatures, about 4°F higher than Unit 2. Other differences were noted in steam and feedwater flow but none of the differences were considered sufficient to significantly affect thermal hydraulic characteristics inside the steam generators. The different analyses included:~~

Description: The NRC conducted a number of different thermal-hydraulic analyses, including:

- Lower bounding thermal hydraulic analysis using the steam generator base design condition, where primary inlet temperature was 598°F, and an upper bound case where primary inlet temperature was 611°F as identified in Mitsubishi Document L5-04GA021, Revision 3
- Varying steam generator pressures from 833 to 942 psia
- Steam mass flow rates from 7.59 to 7.62 Mlbm/hr
- Primary loop volumetric flow rate from 102,000 to 104,000 gpm, and
- Recirculation ratio from 3.2 to 3.5.

~~c. Conclusions~~

~~The team identified one unresolved item associated with SCE's evaluation of the Unit 3 loose parts monitoring alarms.~~

The result of the independent NRC thermal-hydraulic analysis ~~indicated~~concluded that differences in the actual operation between units and/or individual steam generators had an insignificant impact on the results and in fact, the team did not identify any changes in steam velocities or void fractions that could attribute to the differences in tube wear between the units or steam generators. It should be noted that increases in primary temperature and steam generator pressures has the effect of reducing void fractions and peak steam velocities, which slightly decreases the conditions necessary for fluid elastic instability and fluid-induced vibration.

4.0 Design and Manufacturing Differences (Charter Item #4) (Mitsubishi Charter Item 1)

During the development of the charter, it was not known how SCE and Mitsubishi reviewed and approved design and manufacturing changes. During the inspection, it was identified that all design and manufacturing changes proposed by Mitsubishi required review and approval from a SCE representative. Based on this, it was determined that this area could be covered as one item.

a. Inspection Scope

The team interviewed licensee and Mitsubishi personnel involved in the design and fabrication of the replacement steam generators and reviewed information including nonconformance reports, design drawings, fabrication procedures, design changes, engineering evaluations, supplier deviation requests, and design specifications to identify conditions affecting quality that resulted in relevant design differences between the replacement steam generators. The team assessed whether these differences could be considered as contributing factors for the cause of the tube-to-tube wear issue in Unit 3. The team also reviewed Engineering Change Packages 800071702 and 800071703 for the Unit 2 and Unit 3 replacement steam generators, respectively, with emphasis on changes made to the design methodology described in the updated final safety analysis report for the original steam generators to verify that the evaluation was performed in accordance with licensee procedures and the provisions of 10CFR 50.59, "Changes,

Tests, and Experiments."

b. Observations and Findings

No findings were identified.

The team identified two unresolved items for which additional information is required to determine if performance deficiencies exist or if the issues constitute violations of NRC requirements. The team also identified several observations related to the design, fabrication, and the engineering change package for the Unit 2 and Unit 3 replacement steam generators.

~~(1)~~1) Introduction: The team identified an unresolved item associated with the design of the retainer bars in Unit 2 and Unit 3 replacement steam generators.

Description: In February 2012, the licensee identified wear indications in Unit 2 replacement steam generators at the tube locations in contact with the retainer bars (see figure below). Some of the indications showed excessive wear with a maximum degradation of 90 percent through wall.

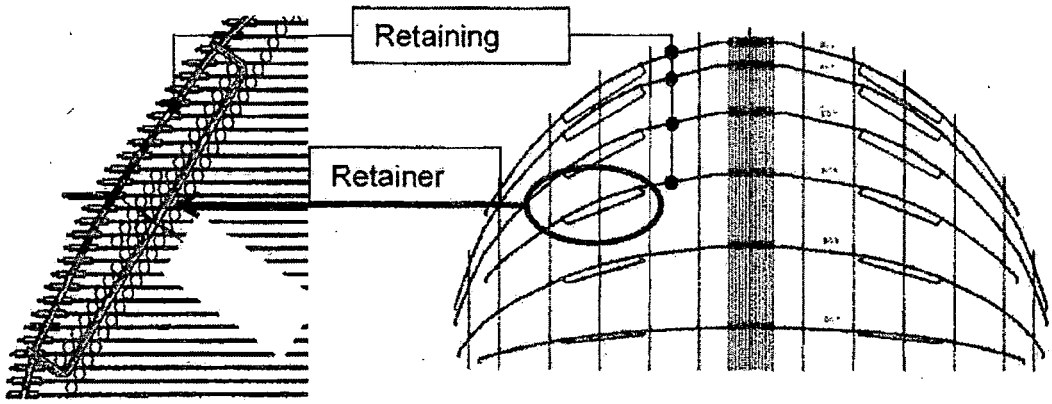


Retainer Bar Design and Location of Affected Tubes (For Illustration Purposes Only)

The team identified that the design of the replacement steam generators did not expect any potential vibration concerns in the area of the tube bundle where the retainer bars were located. The basis for Mitsubishi's design philosophy relied on the following factors:

- Based on the calculated natural frequency of the retainer bar, Mitsubishi considered that there would not be a resonant vibration condition relative to the flow conditions in the location of retainer bars.
- The vibration analysis of the tube bundle only considered out-of-plane vibration because in-plane vibration was not expected to be an operational concern for the retainer bars.

- The outermost tubes were considered the least susceptible to flow-elastic instability; therefore retainer bar locations were not included in the vibration analysis.
- Fluid-elastic instability was found not applicable to the retainer bar because this mechanism did not apply to a single tube in cross flow.
- Vortex-induced vibration was found not applicable to the retainer bar because it was considered a vibration mode applicable to a single cylinder in uniform cross flow in a large area and the flow condition around the retainer bars was considered slug-froth two phase flow.

However, upon identification of retainer bar-to-tube wear in Unit 2 replacement steam generators, Mitsubishi performed an evaluation to identify the cause of excessive wear. The analysis considered three vibration mechanisms: fluid-elastic instability, vortex-induced vibration, and turbulence-induced vibration (random vibration). The analysis for turbulence-induced vibration determined that random vibration was the possible cause of the retainer vibration, based on the peculiar flow around the retainer bar, combined with the rather low natural frequency of the retainer bar. The analysis used the two phase flow conditions around the retainer bars and identified various modes of vibration at those flow conditions that could lead to retainer bar vibration and consequently to tube wear.

Additional review by the NRC is required following completion of the ~~Mitsubishi's~~licensee's cause evaluation to determine whether this issue represents a performance deficiency or constitutes a violation of NRC requirements. This issue is identified as URI 05000362/2012007-03, "Evaluation of Retainer Bars Vibration during the Original Design of the Replacement Steam Generators."

~~(2)~~2) Introduction: The team identified an unresolved item associated with the dimensional controls of critical dimensions throughout the fabrication of Unit 2 and Unit 3 replacement steam generators. Form

Description: Based on the information gathered by the team on the differences in dimensional controls of critical parameters in Unit 2 and Unit 3 replacement steam generators, the team determined that Mitsubishi did not consider the potential impact of improving dimensional controls for tube roundness and anti-vibration bars on the final tube bundle clearances at normal operating conditions.

Additional review by the NRC is required following completion of ~~Mitsubishi's~~the licensee's cause evaluation to fully assess how the dimensional controls contributed to the tube-to-tube wear in Unit 3 and then determine whether this issue represents a performance deficiency or constitutes a violation of NRC requirements. This issue is identified as URI 05000362/2012007-04, "Evaluation of Changes in Dimensional Controls during the Fabrication of Unit 2 and Unit 3 Replacement Steam Generators."

~~(3)~~3) Design Differences: The team did not identify any significant differences in the design requirements of Unit 2 and Unit 3 replacement steam generators. The "Conformed Specification for Design and Fabrication of the Replacement Steam Generators," also known as the design specification, contained identical technical Form

requirements for Unit 2 and Unit 3 steam generators. All replacement steam generators were required to be designed, fabricated, and tested in accordance with the ~~1998~~20?? edition of the American Society of Mechanical Engineers (ASME) Boiler and Pressure Vessel Code~~, with the 2000 Addenda~~, industry standards, and NRC endorsed methods described in applicable regulatory guides. The licensee specified the same licensing requirements for all replacement steam generators.

The design specification also contained provisions to address technical or quality deviations from the requirements of the purchase order or the design specifications, including the disposition of "Repair" or "Accept as-is" conditions captured as non-conformance reports in Mitsubishi's quality assurance program and changes to documents previously approved by the licensee. This process was referred to as "Supplier Deviation Request" and allowed the licensee to review and approve deviations from the approved design specifications. The team noted that changes affecting the specified design were submitted to SCE personnel for review and approval.

The team noted that the design specification established identical provisions for the design of the replacement steam generator components including the vessel, upper/lower shell, transition cone, tubesheet, channel head, divider plate, tube supports, tubing, steam nozzle, feedwater nozzle, primary nozzles, steam flow limiting device, moisture separators/dryers, feedwater distribution system, blowdown and sludge management, access/inspection ports, instrument/sampling taps, and loose part monitoring.

The design specification also established identical requirements for the service life and service environmental conditions of the replacement steam generators. The licensee also specified identical design loading, structural, and seismic requirements for all replacement steam generators. The design specification contained identical requirements for design transients under normal, upset, emergency, faulted, and test conditions.

Additionally, the performance requirements in the design specification were identical for each replacement steam generator, which included:

- Water Level Stability
- Circulation Ratio
- Moisture Carryover
- Steam Carryunder in the Downcomer Annulus
- Reactor Coolant Flow Rate
- Primary-To-Secondary Leakage
- Blowdown Capacity
- Thermal Rating
- Heat Transfer Surface Area
- Tube Plugging Margin
- Fouling Factor
- Overall Heat Transfer Coefficient
- Primary Side Design and Operating Pressure/Temperatures

- Secondary Side Design and Operating Pressures/Temperatures
- Primary Side Design and Operating Flows
- Secondary Side Design and Operating Flows
- Tube Material and Dimensions

The replacement steam generator design developed by Mitsubishi for SONGS Unit 2 and Unit 3 in accordance with the licensee's design specification was translated into the same set of design and fabrication drawings. The team noted that some as-built dimensions varied between Unit 2 and Unit 3 steam generators as a result of the divider plate weld repairs in Unit 3 and other manufacturing processes. However, these dimensional changes did not represent significant deviations from the original design specifications. Therefore, the team determined that no significant differences existed in the design requirements of Unit 2 and Unit 3 replacement steam generators.

~~(4)~~4) Fabrication Differences: The team noted that the design specification contained the same general fabrication requirements for the Unit 2 and Unit 3 replacement steam generators. The design specification contained the methods required for fabrication, assembly, inspection, and testing of the replacement steam generators. The specification covered, in part, fabrication requirements for the channel head cladding, tube dimensions, tube wall thickness, tube bend radius, tube "ovality," tubesheet, tube-to-tubesheet joints, tube supports, tube bundle, machined gasketed surfaces, non-ASME steam generator internals, welding methods, post-weld heat treatment, and allowable welding materials. The specification also contained detailed requirements for inspections, tests, and examinations, which included examination methods and personnel qualification requirements.

The design specification also required the use of "Supplier Deviation Requests" to address technical or quality deviations from the requirements of the Purchase Order or the design specifications, including the disposition of "Repair" or "Accept as-is" conditions identified during the fabrication process and changes to fabrication documents previously approved by the licensee. The team noted that fabrication issues affecting the specified design were submitted to SCE personnel for review and approval.

Based on discussions with SCE and Mitsubishi personnel and the review of documentation about the fabrication history of Unit 2 and Unit 3 replacement steam generators, the team identified the differences listed below. At the conclusion of the onsite portion of this inspection, the differences between Unit 2 and Unit 3 steam generators as a result of the fabrication process were under consideration for the cause evaluation.

- Steam Dryer Assembly – During the fabrication of Unit 2 steam generator 2E0-89, Mitsubishi identified a nonconforming condition of the steam dryer assembly that included damaged locking plates of vane jacking devices, displaced bolts, and damaged vanes. The cause of this issue was determined to be inadequate evaluation and control of the design ~~within~~ regard ~~to~~ the capacity of the vane jacking devices to sustain all fabrication conditions. Specifically, the vane jacking

devices failed to stay in the design position during multiple rotations of the steam generator assembly during fabrication. Mitsubishi corrected the condition, in part, by replacing all vane jacking devices and damaged vanes with a new design, which was also used in the fabrication of the Unit 2 steam generator 2E0-88, and Unit 3 steam generators 3E0-89 and 3E0-88. Additionally, Mitsubishi modified the assembly sequence of the steam dryers. For Unit 2 steam generator 2E0-89, the steam dryer vanes were assembled in-situ while the steam dryers for Unit 2 steam generator 2E0-88 and Unit 3 steam generators 3E0-88 and 3E0-89 were preassembled before installation in their final position.

- Drilling of Tubesheet Holes – The tubesheet holes in Unit 2 and Unit 3 steam generators where the tubes are inserted for final assembly were made with different drill bits. The Unit 2 steam generator tubesheets were drilled with uncoated drill bits. The Unit 3 steam generator tubesheets were drilled with titanium-nitride coated drill bits, which improved the drill bit life and resolved tooling mark issues experienced in Unit 2.

- Transition Wrapper Welding – The welding of the transition wrapper was performed in different order for each unit. For Unit 2 steam generators, the transition wrapper was welded after the tubes and anti-vibration bars were installed. In Unit 3 steam generators, the transition wrapper was welded before the installation of tubes and anti-vibration bars.

- Cladding Removal Process for the Channel Head – The removal of the stainless steel clad weld from the interior surface of the channel head base metal in preparation for the divider plate weld (i.e. structural butter weld) was performed with different methods in Unit 2 and Unit 3 replacement steam generators. For Unit 2, Mitsubishi used a machining process to remove the cladding in both steam generators. In Unit 3, Mitsubishi used an air carbon-arc gouging process. This method resulted in separation of the butter weld during hydrostatic testing. The root cause evaluation concluded that the air carbon-arc gouging process left carbon deposits on the base metal. Gouging was followed by grinding which was designed to remove the heat affected zone and expected to completely remove the carbon deposits. However, the grinding process left carbon deposits behind, which resulted in the localized areas of high carbon and high base metal hardness due to carburization. The repair of the Unit 3 divider plate welds is addressed in further details in Section 12.0 of this report.

- Helium Leak Test – As part of the fabrication process, Mitsubishi performed a Helium-Nitrogen leak test on the secondary side of the replacement steam generators to check for leaks on the tube-to-tubesheet welds. For all steam generators, this test was performed after completion of the tube-to-tubesheet weld, but prior to the penetrant examination of the tube-to-tubesheet welds and final tube expansion. The leak tests for Unit 2 steam generators were performed at a higher pressure than Unit 3 steam generators. Additionally, the Unit 2 tests were performed using a temporary welded cap on top of the steam generator shell to enclose the secondary side, while a temporary clamped cap was used in

Unit 3 steam generators. All tests required the same holding time before starting the test and the same leak rate acceptance criteria.

- Preliminary and ASME Section III Hydrostatic Tests – The number of hydrostatic tests performed in accordance with ASME Section III on the primary and secondary sides of the replacement steam generators varied between Units due to the results of the initial test in each steam generator. For each replacement steam generator, the hydrostatic tests were performed first on the primary side and then on the secondary side. Both Unit 2 steam generators met the acceptance criteria in the first hydrostatic test. However, during the first hydrostatic test on the secondary side of Unit 3 steam generator 3E0-89, Mitsubishi identified leakage through a tube-to-tubesheet weld that exceeded the ASME Code acceptance criteria. After repairs were completed to address the leakage, the hydrostatic tests were re-performed. Following the second set of hydrostatic tests on Unit 3 steam generator 3E0-89, cracking indications were identified in the divider plate-to-channel head weld. After repairs were completed to address the divider plate weld cracks, a third set of hydrostatic tests were performed in Unit 3 steam generator 3E0-89. Since similar cracking indications of the divider plate weld were identified in Unit 3 steam generator 3E0-88, a second set of hydrostatic tests was performed in this steam generator after the divider plate weld was repaired.

  Additionally, prior to each ASME Section III hydrostatic test, Mitsubishi performed a preliminary hydrostatic test of the primary and secondary side of the steam generators at design pressure to check for leakage at the feed pump, pressure filling line, temporary gaskets, and temporary seals. Therefore, each replacement steam generator received an equal number of preliminary and ASME Section III Hydrostatic Tests. The total numbers of hydrostatic tests for each steam generator are summarized below.

| **Number of Preliminary and ASME Section III Hydrostatic Tests** | | | |
|---|---|---|---|
| **Steam Generator** | **Primary Side** | **Secondary Side** | **Results** |
| 2E0-89 | 1 | 1 | Acceptance criteria met |
| 2E0-88 | 1 | 1 | Acceptance criteria met |
| 3E0-89 | 1 | 1 | Leakage detected in tube-to-tubesheet weld |
| | 1 | 1 | Divider plate weld separation weld identified |
| | 1 | 1 | Final – Acceptance criteria met |
| 3E0-88 | 1 | 1 | Divider plate weld separation weld identified |
| | 1 | 1 | Final – Acceptance criteria met |

- Pre-Service Inspection – The design specification established similar requirements for the pre-service eddy current examination of Unit 2 and Unit 3 replacement steam generators. The team noted that the eddy current

examinations of Unit 2 and Unit 3 steam generators were performed with similar eddy current techniques, including essential variables. However, the circumstances in which the examinations were performed varied for each Unit. For Unit 2, the pre-service examination was performed after the steam generators were delivered at the SONGS jobsite. The steam generators were examined on the shipping saddles, where the position of the tube bundle was at 45 degrees from the gravity neutral position. This position was dictated by the location of the steam generator lifting trunnions which were installed on the upper shell at 45 degree orientation from the steam generator centerline. For Unit 3, the pre-service eddy current examination was performed at the Mitsubishi Kobe facility while the steam generators were still on the fabrication rollers and in the gravity neutral position (i.e. divider plate oriented horizontally). The decision to perform the Unit 3 pre-service examination at the Mitsubishi facility was dictated by delivery schedule considerations resulting from the divider plate weld repairs.

- Flow Limiter for Primary Inlet Nozzles – The replacement steam generators were designed with a flow limiter located in the primary inlet nozzle (see figure below) in order to make the reactor coolant system flow similar to the flow rate of the original steam generator and not exceed the maximum allowable reactor coolant system flow rate. The licensee's evaluation for the engineering design package determined that although the original steam generators had a number of plugged tubes, the reactor coolant system flow rate of the original steam generators was near the design requirement. Because the replacement steam generators has 377 more tubes than the original steam generators, and contained tubes with u-bends versus "square bends", the pressure drop of the replacement steam generators with no plugged tubes would be much less than the original steam generators resulting in a higher flowrate.

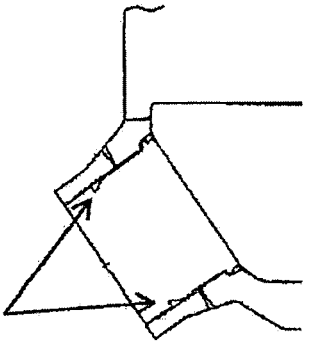


Replacement Steam Generator Primary Inlet Nozzle (For Illustration Purposes Only)

The flow limiter was designed to ensure the total "best estimate" reactor coolant flow rate with the replacement steam generators installed would not exceed 106.5 percent of the design volumetric flow rate of 396,000 gallons per minute at a reactor coolant system cold leg temperature of Tcold = 540.9°F. For Unit 2 replacement steam generators, the flow limiter diameter to nozzle inner diameter ratio was 0.94 while the ratio for Unit 3 steam generators was 0.915 due to Unit ~~3~~2 reactor coolant pump replacement. The flow limiter dimensions resulted from

Form

a scaled model test performed by Mitsubishi and it was designed to be machined as part of the nozzle base metal.

- Pitch Distance of Tube Support Plate Drilled Holes in Unit 2 Steam Generator 2E0-89 – During fabrication of the tube support plates for Unit 2 steam generator 2E0-89, quality control inspections identified unacceptable measurements of the pitch distance between drilled holes. Mitsubishi fabrication procedures required verification of the total center-to-center distance between ten inline drilled holes at certain sample points of the tube support plate. The dimensional verification checks identified a total of 200 measurements in tube support plate number 3 and 10 measurements in tube support plate number 6 that did not meet the dimensional acceptance criteria established in the fabrication procedures. Mitsubishi evaluated this non-conformance condition and accepted the condition "as-is" with the SCE's approval. The technical justification for accepting the condition addressed four elements: (a) the impact of the condition on the ability to insert the tubes through the affected areas of the tube support plates, (b) resulting stress on the tubes after insertion, (c) impact of the condition on the tube to anti-vibration gap size, and (d) possible occurrence of tube scratch during inspection. Similar unacceptable measurements were not identified in Unit 2 replacement steam generator 2E0-88 or Unit 3 replacement steam generators 3E0-89 and 3E0-88.

- Tube-to-Tube Clearance in Unit 2 steam generator 2E0-89 – During fabrication of Unit 2 replacement steam generator 2E0-89, interference checks identified that the clearance between the tubes in Rows No. 28 and 30 in Column No. 22 was less than the minimum clearance of 0.13-inch specified in Mitsubishi's inspection procedure. The condition was accepted "as-is" by Mitsubishi and SCE through the supplier deviation request process. The main considerations of the technical evaluation included: (a) thermal expansion difference, (b) tube expansion due to operating pressures, (c) tube displacement due to out-of-plane flow induced vibration, and (d) tube displacement due to seismic acceleration. The team noted that no tube-to-tube wear indications were identified in this area of the tube bundle.

- Anti-Vibration Bar Spacing Issues in Unit 2 Steam Generator 2E0-89 – During fabrication of Unit 2 replacement steam generator 2E0-89, quality control inspections identified unacceptable gaps between tubes and the anti-vibration bars in the outside tube columns. The affected area was identified as welding zone-4. The apparent cause for the anti-vibration bar spacing issue was due to performing the welding of zone-4 while the steam generator was oriented horizontally with this welding zone oriented to the bottom of the bundle. In this configuration, the tube bundle experienced sagging at the time of welding due to gravity. After completion of welding zone 4, the steam generator assembly was rotated 180 degrees for additional assembly steps, but the sagging in the opposite direction caused enlargement of the gaps in welding zone 4 and this enlargement remained approximately the same for all subsequent rotations. When zone-4 was rotated 180-degrees after welding, deflection or sagging of the tube retaining bars due to gravity slightly pulled the anti-vibration bars, increasing the gap between the tube and the anti-vibration bars in this zone.

With the licensee's approval, Mitsubishi implemented various corrective actions to address the condition in the pending Unit 2 replacement steam generator 2E0-88 and subsequently in Unit 3 steam generators which included: (a) use of smaller spacer blocks between tubes for the installation of anti-vibration bars, (b) re-define the welding zones to limit welding in the horizontal position, and (c) reduce rotations during welding of the other bundle zones. Mitsubishi performed rework activities in Unit 2 steam generator 2E0-89 to restore anti-vibration bar spacing to design specifications. These activities resulted in better gap distribution. All the tube-to-anti-vibration bar gaps exceeding the initial dimensional criteria were further evaluated and accepted in accordance with Mitsubishi's gap size evaluation procedure.

- Rotations of Steam Generator Assembly for Anti-Vibration Bar Installation and Welding – The team noted that welding of anti-vibration bars structure required rotating the steam generators several times. As a result of the corrective actions generated to address the anti-vibration bar spacing issues in Unit 2 steam generator 2E0-89, the installation procedure was revised to reduce the number of rotations for anti-vibration bar installation to attain better gap control. This procedure revision resulted in different number of rotations in each replacement steam generator. Steam generators Unit 2 E0-89, Unit 2 E0-88, Unit 3 E0-89, and Unit 3 E0-88 received 11.25, 4, 3.5, and 3.5 rotations, respectively, during installation of the anti-vibration bars structure.

- Temporary Installation of Plastic Ties – In order to limit the displacement of anti-vibration bars during rotation of the steam generator assembly for welding of the anti-vibration bars structure, Mitsubishi revised the installation procedure to install temporary plastic ties between the retaining bars and the tubes. This step of the anti-vibration bar assembly process was performed in a different sequence for Unit 2 and Unit 3 steam generators. For Unit 2, the installation of plastic ties occurred after welding the transition wrapper, the Helium leak test, and tube hydraulic expansion, but before welding the channel head to the tubesheet, the hydrostatic tests, and the pre-service inspection. In Unit 3, the installation of plastic ties was performed between welding the transition wrapper and the Helium leak test.

- Dimensional Controls of Anti-Vibration Bar Structure – According to Mitsubishi's preliminary cause evaluation taking place at the time of this inspection, the controls of critical dimensions affecting the clearances between the tube and the anti-vibration bars were gradually improved throughout the fabrication of the Unit 2 and Unit 3 steam generators. This improvement on dimensional controls was a consideration for the determination of the failure mechanism leading to tube-to-tube wear in Unit 3.

  The first dimensional control under consideration was the improvement of tube roundness in the section of the tubes that was bent to form the U-bend shape. During fabrication of Unit 2 steam generator 2E0-89, the supplier of tubular product for Mitsubishi (i.e. Sumitomo), experienced quality issues to meet the G-values established in the design specifications, resulting in a high number of tube

rejections. The G-value was a measure of departure from roundness, or "ovality," after the tubes were bent and it was controlled in order to control the gap between tubes and anti-vibration bars (see figure below). The G-values were measured at different locations along the U-bend section of the tubes for a selected number of tubes per row, as established in Mitsubishi's procedure. The acceptance criteria for G-value varied depending on the row where the tubes were installed. The acceptance criteria also remained the same throughout the fabrication of Unit 2 and Unit 3 replacement steam generators.

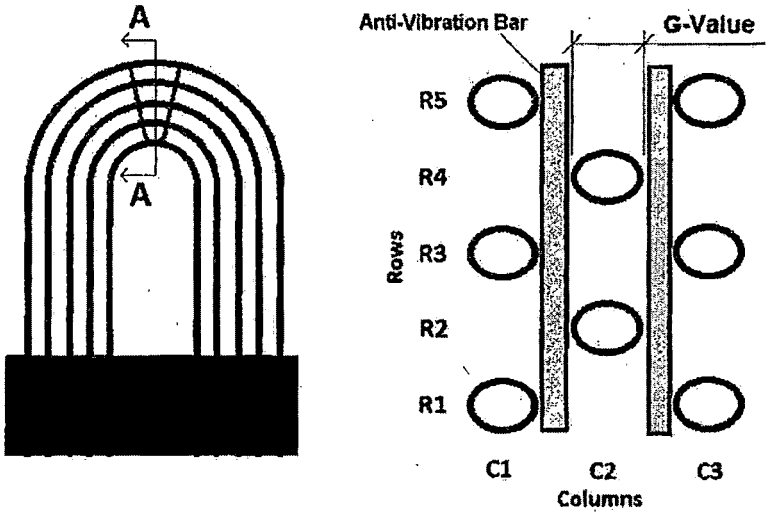


**Section A-A**

Description of G-Value Parameter (Conceptual Drawing – For Illustration Purposes Only)

Based on discussions with licensee personnel and documentation reviews, the team noted that Sumitomo implemented measures to improve the quality of the tube bending process which resulted in less deviation of G-values and a reduction in the amount and variability of tubing "ovality." Based on the statistical analysis of G-value data collected during fabrication of the Unit 2 and Unit 3 steam generators, Mitsubishi concluded that the G-values ~~standard deviation~~ gradually decreased since the fabrication of the first steam generator.

Another dimensional control under consideration was the variability of anti-vibration bar dimensions. Mitsubishi's fabrication procedures required inspection of various dimensions of the anti-vibration bars to control the gap between the anti-vibration bars and the tubes. These dimensions were: thickness in the straight sections, twisting and flatness of the straight sections after bending, and thickness of the anti-vibration bar tip (i.e. nose) after bending. Among these dimensions, the twisting and flatness of the straight sections after bending were verified using a "Go or No-Go" approach based on the acceptance criteria in Mitsubishi's procedures but no specific measurements were required to be maintained by procedure. Additionally, the acceptance criteria for anti-vibration bar dimensions remained the same throughout the fabrication of Unit 2 and Unit

3 replacement steam generators. Mitsubishi conducted a preliminary statistical analysis of the available dimensional data for anti-vibration bars and the team concurred that there were minor differences in the statistical distribution of these dimensions in Unit 2 and Unit 3 steam generators.

Comm
any de

[gew]l
inform

Engineering Change Package (10 CFR 50.59): The team determined that the licensee's evaluation for changes in the updated final safety analysis report's design methodologies for the replacement steam generators was consistent with SONGS procedures for the implementation of 10 CFR 50.59 requirements. The licensee's evaluation contained in Engineering Change Packages 800071702 and 800071703 for the Unit 2 and Unit 3 replacement steam generators, respectively, determined that the replacement of the original steam generators did not affect the current licensing basis to the extent of needing prior approval from the NRC as required by 10 CFR 50.59.

In the 50.59 screening evaluation associated with the engineering change package for the Unit 2 and Unit 3 replacement steam generators, the licensee determined that the proposed activity did not adversely affect a design function, or the method of performing or controlling a design function described in the updated final safety analysis report. The licensee also determined that the steam generator replacement activity did not change a procedure in a manner that adversely affected how an updated final safety analysis report design function is performed or controlled. Additionally, the licensee determined that the steam generator replacement activity did not involve a test or experiment not described in the updated final safety analysis report. The licensee evaluated the following updated final safety analysis report design functions in the 50.59 screening:

- Steam Generator Design Functions
- Reactor Coolant System Structural Integrity
- Emergency Core Cooling System Performance
- Non-Loss of Coolant Accident Transients
- Containment Pressure-Temperature Analysis
- Low Temperature Overpressure Protection
- Reactor Protection System, Engineered Safety Features Actuation System, Core Operating Limit Supervisory System, and Core Protection Calculations
- Nuclear Steam Supply System Performance
- Non-Safety Related Control Systems Performance

However, the 50.59 screening evaluation identified three methods of analysis described in the updated final safety analysis report that were affected by the proposed steam generator replacement and required further evaluation against the criteria in 10 CFR 50.59. The affected methodologies are described below:

- Seismic Analysis of Reactor Vessel Internals – The original analysis of SONGS Unit 2 and Unit 3 reactor vessel internals with the original steam generators was performed with the methodology described in Combustion Engineering Topical Report CENPD-178, "Structural Analysis of Fuel Assemblies for Combined Seismic and Loss of Coolant Accident." Subsequent to the submittal of this

report, Combustion Engineering revised the methodology by modifying modeling techniques, computer codes, testing methods, and acceptance criteria in response to changes in licensing requirements. Consequently, the original report was resubmitted to the NRC as CENPD-178-P, Revision 1-P, August 1981. This revision was approved by the NRC in a Letter from H. Bernard to A. Scherer, "Acceptance for Referring of Licensing Topical Report CENPD-178," dated August 6, 1982. The licensee used this revised methodology for the replacement steam generators and considered it as a methodology approved by the NRC for the intended application.

- Reactor Coolant System Structural Integrity – The structural analysis of the original steam generators used ANSYS software for the thermal and stress analyses while the replacement steam generators were analyzed using ABAQUS software. ANSYS was described in the updated final safety analysis report as a large-scale, general-purpose, finite element program for linear and nonlinear structural and thermal analysis of the reactor coolant loop components. The licensee considered ABAQUS to be similar to ANSYS. The licensee compared both programs using thermal and stress sample problems. The comparison demonstrated that the results varied from theoretical solutions by no more than 1 percent, and ABAQUS and ANSYS results themselves were also within 1 percent of each other. The variability of results was determined to be within the margin of error for the subject type of analysis.

- Tube Wall Thinning Analysis – The original steam generator analysis used CEFLASH computer program for the main steam line break mass-energy blowdown analysis, whereas the replacement steam generator analysis used manual calculations to represent the main steam line break blowdown loads by applying the maximum possible tube differential pressure, which bounded the pressure calculated by CEFLASH.

  For loss of coolant accident analysis, the original steam generator used STRUDL computer program to calculate displacement histories and then ANSYS computer program to calculate tube stresses. The tube stresses for the replacement steam generators were determined using ANSYS computer program based on the blowdown forces. For the original steam generators the combination of loads analyzed was primary loop pipe break plus design basis earthquake and main steam line break plus design basis earthquake. For the replacement steam generators, the loss of coolant accident, design basis earthquake, and the main steam line break events were combined as one limiting event, which SCE considered to be a more conservative method of evaluation relative to the original steam generators. The licensee determined that the results of the tube wall thinning analysis for the replacement steam generators were conservative or essentially the same and the methodology used did not represent a departure from a method of evaluation described in the updated final safety analysis report.

Further discussion is contained in Section 13.0 of this report on the methodology used by the licensee for the reactor coolant system structural integrity and tube wall thinning analysis.

The team noted that a key methodology for the design of the original and replacement steam generators was the thermal-hydraulic code used to model the flow conditions in the steam generators. ~~Mitsubishi's FIT-III thermal-hydraulic~~ The original steam generators were designed using ATHOS thermal-hydraulic code while the replacement steam generators were designed with a proprietary code from Mitsubishi (Need to verify this with Joel. Think the generators were designed before ATHOS was developed in 1985). Mitsubishi's code was accepted by SCE for the design of the replacement steam generators. The team noted that the updated final safety analysis report did not specifically describe ATHOS as the ~~thermal-hydraulic~~ code used for the design of the original steam generators and therefore the ~~use of the FIT-III~~change in thermal-hydraulic code did not constitute a change in methodology or a change in an element of a methodology described in the updated final safety analysis report. The updated final safety analysis report did describe the computer code CRIB as the code used to analyze overall steam generator performance. As described in the updated final safety analysis report, CRIB was used to establish the recirculation ratio and fluid mass inventories as a function of power level in the original steam generators.

With regard to the major design changes between the original and replacement steam generators, the updated final safety analysis report did not specify how the original steam generators relied on special design features such as the stay cylinder, tubesheet, tube support plates, or the shape of the tubes to perform the intended safety functions. The description of the original steam generators was focused on the overall thermal performance characteristics and the applicable codes and standards used for fabrication. The updated final safety analysis report provided a brief description of the egg-crate tube support plate design and its function to prevent concentration of impurities in the tube-to-tube support plate gap, which could lead to tube degradation. The updated final safety analysis report also described degradation issues of the egg-crate tube support plate design as a result of flow-accelerated corrosion and the corrective actions taken to mitigate this degradation mechanism.

Regulatory Guide 1.187, "Guidance for Implementation of 10 CFR 50.59, Changes, Tests, and Experiments," November 2000, allows the use of NEI 96-07, "Guidelines for 10 CFR 50.59 Implementation," Revision 1 for methods that are acceptable for complying with 10 CFR 50.59. Per NEI 96-07, changes affecting structures, systems, or components that are not explicitly described in the updated final safety analysis report can have the potential to adversely affect structure, system, or component design functions that are described and thus may require a 10 CFR 50.59 evaluation. Consistent with this guidance, SCE's 50.59 screening evaluated the differences in subcomponents between the original steam generators and replacement steam generators as to whether the differences adversely affected the design function (reactor coolant pressure boundary) of the steam generators. The replacement steam generators were designed and fabricated in accordance with quality assurance requirements, and 10 CFR 50.59 does not require the licensee to presume deficiencies in the design or fabrication.

~~c. Conclusions~~

~~The team determined that no significant differences existed in the design requirements of Unit 2 and Unit 3 replacement steam generators.~~ Based on the updated final safety analysis report description of the original steam generators, ~~the team determined that the steam generators major design changes were reviewed in accordance~~one unresolved item associated with the ~~10 CFR~~ 50.59 ~~requirements.~~

~~The team~~review was identified ~~two unresolved items:~~

- ~~Evaluation of Retainer Bar Vibration during the Original Design of the Replacement Steam Generators~~
- ~~Evaluation of changes in Dimensional Controls during the Fabrication of Unit 2 and Unit 3 Replacement Steam Generators~~

~~Additionally, an unresolved item related to a change in a method of evaluation used for the stress analysis calculations~~ and is discussed in Section 13.0 of ~~the~~this report.

5.0 Quality Assurance/Quality Control (Charter Item 5) (Mitsubishi Charter Item 4)

The team reviewed numerous documents from both SCE and Mitsubishi (including sub-contractors, such as Sumitomo) associated with the design, fabrication, and manufacturing of the steam generators for both units. The team reviewed SCE and Mitsubishi's quality assurance program, procedures and implementation activities for the control of purchased material, equipment, and services; inspections; procurement document control; and corrective action and nonconformance activities. Specifically, the team reviewed a sample of Mitsubishi nonconformance reports, audit, survey, all SONGS condition action requests, audits, surveillances, stop work orders, and supplier deviation requests associated with the design and manufacturing of the steam generators. The team concluded that these portions of SCE and Mitsubishi's quality assurance program regarding its safety-related activities were appropriately controlled and implemented.

5.1 SONGS Quality Assurance/Quality Control

a. Inspection Scope

The team reviewed SCE's implementation of their quality assurance program to determine if it complied with the requirements of 10 CFR 50, Appendix B, "Quality Assurance Criteria for Nuclear Power Plants and Fuel Reprocessing Plants." The team reviewed SONGS implementing procedures, quality assurance manual, vendor audits, procurement specifications, corrective action requests, and numerous other documents, as well as interviewed a number of quality assurance/control and engineering personnel to determine the appropriateness of activities affecting quality conducted during fabrication, manufacturing and delivery of the replacement steam generators.

b. Observations and Findings

No findings were identified.

~~(1)~~1) Policies and Procedures for Supplier Selection and Control

The team reviewed Quality Assurance Manual, Section 17.2.7, "Control of Purchased Material and Services," which defines the process used to ensure that purchased material, source material, and subcontracted services conform to applicable codes and standards. Section 17.2.7.2 of the quality assurance manual provided measures for the approval and control of suppliers and describes the methods that SCE uses to conduct technical and quality assurance evaluations of potential suppliers. Specifically, SCE evaluated an audit performed by Dominion (DA 2002-92, "Dominion Audit of Mitsubishi Heavy Industries"). The evaluation was performed and documented in accordance with SONGS policies and implementing procedures that govern the control of purchased material, equipment, and services. The results of SCE Evaluation MHI-01-04, "Evaluation and Review of Contractor, Consultant, Utility or Licensee Audit Report," stated that Mitsubishi was conditionally qualified for the fabrication and design of the replacement steam generators. An audit was performed by SCE when a sufficient quantity of work had been performed to demonstrate implementation of Mitsubishi's quality assurance program. Southern California Edison-'s oversight of Mitsubishi also included verification of Mitsubishi's activities during fabrication, inspections, testing and shipment of the procured item. After approximately 14 months from the initial evaluation SCE removed the conditional qualification based on results from Evaluation MHI-10SV-05, "Source Evaluation Report of MHI," dated February 8, 2006, and MHI-3SV-06, "Source Verification Report of MHI," dated May 3 2006, and implementation and verification of specific corrective actions. Part of the SONGS oversight plan of Mitsubishi included the placement of SCE quality assurance/quality control personnel (residents) at the Mitsubishi facility. Plan SGR-A10183, "Replacement Steam Generator Resident Oversight Plan," described the roles and responsibilities of the resident management, engineering, and quality oversight implementation strategy for the replacement steam generators. This oversight plan was created to provide reasonable assurance that the design, licensing, fabrication, delivery, and acceptance of the SONGS replacement steam generators were performed in accordance with specified SCE, industry, regulatory, and Code requirements. The team noted that after the resident was placed at Mitsubishi, Source Verifications and Surveillances performed by SCE decreased. After the NRC team conducted several interviews with the SCE personnel responsible for oversight of Mitsubishi it was determined that the resident provided adequate oversight of Mitsubishi's activities. Nuclear Oversight Division Project Oversight Quarterly Reports were provided by SCE that demonstrated no decrease in SCE oversight of Mitsubishi. These responsibilities were shifted to the resident at Mitsubishi. During the review of the documentation generated by the resident the NRC team noted that the resident was performing these activities on behalf of SCE.

~~(2)~~2) Purchase Order Review

The team reviewed purchase order 6C294014 from Edison Material Supply LLC, issued September 28, 2004, for the design, fabrication, and delivery of four replacement steam generators for SONGS Units 2 and 3. The procurement order stated that all related work was to be performed in accordance with Specification SO23-617-01, "Specifications for Design and Fabrication of RSG for Units 2 and Unit 3." Specification SO23-617-01 identified the codes, standards, regulations and

other documents applicable to the design, fabrication, and delivery of the replacement steam generators. For example Specification SO23-617-01 invoked American Society of Mechanical Engineers Boiler and Pressure Vessel Code, American National Standards, American Society for Testing and Materials Standards, and Electric Power Research Institute Technical Report 016743-V2R1, "Guidelines for PWR Steam Generator Tubing Specifications and Repair," among others.

~~(3)~~3) Supplier Audit and Surveillance Reports

Form

The team reviewed a sample of audits and surveillances performed on Mitsubishi to verify SCE's approval process of Mitsubishi and subcontracted services. The team noted that the audits and annual assessments reviewed were adequately documented and provided evidence of Mitsubishi's compliance with quality assurance requirements. The team also verified that audit reports supported the conclusions made by SCE.

5.2 Mitsubishi Quality Assurance/Quality Control

a. Inspection Scope

The team reviewed Mitsubishi implementation of their quality assurance program to determine if it complied with the requirements of 10 CFR 50, Appendix B, "Quality Assurance Criteria for Nuclear Power Plants and Fuel Reprocessing Plants." The team also reviewed a sample of reports from audits and surveys that Mitsubishi conducted of various subcontractors, such as Sumitomo to determine the adequacy of oversight provided by Mitsubishi activities affecting quality and that contracted activities were implemented in accordance with the Mitsubishi-approved quality assurance program. In addition, the team reviewed Mitsubishi's Approved Suppliers List to verify that vendors listed were qualified according to Mitsubishi's specifications and that the list was maintained current.

b. Observations and Findings

No findings were identified.

~~(1)~~1) Policies and Procedures for Supplier Selection and Control

Form

The team reviewed Mitsubishi Quality Assurance Manual, Section 4, "Procurement Control," of the which defines the process used to ensure that purchased material, source material, and subcontracted services conform to the applicable requirements of the American Society of Mechanical Engineers Code and to customer procurement documents. Section 4.4 of the Quality Assurance Manual provided measures for the approval and control of suppliers and described the process that Mitsubishi used to conduct surveys or audits, as required. Additionally, Section 4.4 provided guidance for the preparation of purchase specifications and subcontract specifications, including the imposition of regulatory requirements for the American Society of Mechanical Engineers Code, Section III products.

The team reviewed Procedure BUH94-06, "Vendor Evaluation Procedure," which provided guidance on the evaluation of the quality control capability of suppliers by performing surveys, audits and performance evaluations of the supplier quality assurance program. Procedure BUH94-06 provided a detailed description of the entire process to be followed by auditors before, during and after a survey/audit was performed.

No issues were identified.

~~(2)~~2) Supplier Audit and Surveillance Reports

Form

The team reviewed a sample of external audits and surveys to verify Mitsubishi's approval process of Sumitomo Metal Industries, Limited, Steel Tube Works and Sumitomo Metal Industries, Limited, Pipe & Tube Company Wakayama Steel Works. The team noted that the audits and annual assessments reviewed were adequately documented and provided evidence of each company's compliance with quality assurance program requirements. The team also verified that audit checklists were prepared and completed for the audit and contained sufficient objective evidence to support the conclusions made by Mitsubishi.

During the review, the team learned that as a consequence of nonconformance report UHNR-SON-RSG-06N005 related to inadequate lot control during final mill annealing of the tubing, Mitsubishi issued a stop work order to Sumitomo. As part of their process Mitsubishi visited Sumitomo to find the root cause of the nonconformance. After a review of Sumitomo's corrective action, Mitsubishi was able to confirm the adequacy of the corrective actions and preventive actions. Mitsubishi released Stop Work Order UHH-G06A097 imposed on Sumitomo.

On May 8, 2007, Mitsubishi performed Special Audit UHQ-07N004, on Sumitomo, in order to confirm adequacy of activities based on Sumitomo Corrective Action Plan UHCP-07N004. During the audit Mitsubishi found two findings and made one recommendation. Both findings required corrective action from Sumitomo. The Mitsubishi audit indicated that Sumitomo was not able to perform adequate activities for manufacturing heat transfer tubing in accordance with Sumitomo's shop manual. The causes of the deficiencies identified during the audit were a result of Sumitomo's staff failing to follow the shop manual requirements. Because the two findings were related to the stop work order, Mitsubishi did not allow Sumitomo to start manufacturing activities until adequate implementation of corrective actions were confirmed by Mitsubishi. On June 21, 2007, Mitsubishi verified Sumitomo implementation of the corrective actions. During this visit at Sumitomo, Mitsubishi verified the operations involving straight tube fabrication prior to tube bending operations were performed in accordance with Sumitomo's shop manual. Mitsubishi found that the same type of corrective actions taken by Sumitomo for straight tube fabrication operations applied to tube bending operations. During the review of the implementation of the corrective actions Mitsubishi could not verify acceptability of Sumitomo tube fabrication operations for the tube bending process. Mitsubishi allowed Sumitomo to restart operation only for the straight tube fabrication. On July-13, 2007, Mitsubishi subsequently confirmed the adequacy of Sumitomo corrective actions on tube bending processes. Mitsubishi verified that the bending operations

followed the requirement of the Sumitomo' shop manual. On July 17, 2007, Mitsubishi lifted the restrictions imposed on Sumitomo and they were allowed to restart operations.

No issues were identified.

~~(3)~~3) Maintenance of the Approved Supplier List

The team reviewed Mitsubishi Quality Assurance Manual Section 4, "Procurement Control," which defined the controls for the maintenance, distribution, and update of Qualified Vendor List UES-20100006. According to Section 4, the Nuclear Plant Quality Assurance Section had the responsibility for preparing, approving, and distributing the qualified vendor list and any subsequent revisions. In addition, a review by the quality assurance engineer was required prior to final document approval. Mitsubishi was informed of changes to their supplier's quality assurance manuals through procurement requirements imposed on the suppliers on their certificate of qualification as an approved vendor. If the vendor did not maintain their quality assurance program, they were removed from the qualified vendor list. Prior to issuing a Quality Assurance Manual revision, approved vendors were required to send a copy to Mitsubishi for review and approval, after which Mitsubishi updated the qualified vendor list with the latest revision number and date.

No issues were identified.

5.3 Quality Assurance Conclusion

The team concluded that the quality assurance program requirements for quality activities to support the replacement steam generator project were consistent with the requirements of 10 CFR Part 50, Appendix B. The team also concluded that SCE's and Mitsubishi's quality assurance program requirements were appropriately translated into implementing procedures to support the replacement steam generator project.

6.0 Implementation of Steam Generator Industry Information (Charter Item 6) (Mitsubishi Charter Item 3)

a. Inspection Scope

The team reviewed procurement documentation, Mitsubishi design documentation, and the 10 CFR 50.59 review package to assess SCE's and Mitsubishi's consideration and implementation (as appropriate) of operating experience as part of the steam generator replacement project, and in the steam generator tube inspections conducted during the current outages for SONGS Units 2 and 3. The team interviewed various personnel with respect to operating experience considerations relating to major design changes incorporated into the replacement steam generators. The team reviewed operating experience in NRC generic communications and worldwide plant operating experience that might potentially be relevant to conditions observed at SONGS.

b. Observations and Findings

No findings were identified.

The original steam generators installed throughout the domestic fleet of pressurized water reactors, including SONGS, experienced widespread corrosion of the tubes and tube support plates, stress corrosion cracking of the tubes, and wear at tube supports. These problems led to the replacement of nearly all of the original steam generators, in most cases well before the end of their design lifetime. For SONGS, the design of the replacement steam generators included a number of design changes to correct life limiting problems with the original steam generators, based in part on consideration of SONGS-specific and industry-wide operating experience. This included use of more corrosion resistant materials for the tubing and tube support plates to mitigate corrosion and stress corrosion cracking issues experienced in the past. The licensee's bid specification required that the stay cylinder feature of the original steam generators be eliminated to maximize the number of tubes that could be installed in the replacement steam generators and to mitigate past problems with tube wear at tube supports caused by relatively cool water and high flow velocities in the central part of the tube bundle. Mitsubishi employed a broached trefoil tube support plates instead of the egg crate supports in the original design. In addition to providing for better control of tube to support plate gaps and easier assembly, the broached tube support plates were intended to address past problems with the egg crate supports by providing less line of contact and faster flow between the tubes and support plates, reducing the potential for deposit buildup and corrosion. Mitsubishi selected a u-bend configuration for the upper part of the tube bundle instead of the square bend design of the original steam generators based on its experience that u-bends were easier to fabricate and support and were easier to inspect.

The team's review of Mitsubishi design documentation for the anti-vibration bars indicates that Mitsubishi considered wear in the u-bend region as the most important issue affecting the anti-vibration bar design. Mitsubishi reviewed operating experience regarding wear in the u-bend region of replacement steam generators and trended the experience data as a function of steam generator manufacturer, tube packing arrangements (tube pitch, square versus triangular arrays), and steam generator size. The SONGS steam generators are relatively large, and Mitsubishi acknowledged that this and the tight tube packing geometry could affect wear experience. Mitsubishi stated that the SONGS replacement steam generator were designed to minimize these concerns by providing more support points with shorter spans in the u-bend region along with effective zero gaps between the tubes and anti-vibration bars during steam generator operation. Mitsubishi manufacturing was designed on achieving very small uniform gaps between the tubes and anti-vibration bars during assembly.

Engineering Change Package NECP 800071703 for the replacement steam generators evaluated industry operating experience as it related to the manufacture and operation of the replacement steam generators. Several of these experiences related to fabrication issues, lack of weld quality, material defects, loose parts, lack of cleanliness, and failure to fully expand tubes in the tubesheet. The licensee found most of these issues to be applicable to the replacement steam generators at SONGS, but that these kinds of issues would be adequately addressed by the supplier's (typically Mitsubishi) augmented quality assurance procedures and continuous quality oversight by the licensee. The licensee also cited augmented receipt inspections, in-process

verifications, foreign material exclusion and control, and cleanliness inspections on the part of the supplier or the licensee, as applicable, as addressing these issues.

The licensee addressed industry operating experiences relating to stress corrosion cracking of steam generator tubing by noting that the Alloy 690 thermally treated tubing in the replacement steam generators were expected to be substantially more resistant to stress corrosion cracking than the tubing alloys used in earlier model steam generators. The licensee also addressed experience at another unit which experienced tie rod and consequential tube bow as a result of differential thermal expansion between the tubes and shroud and unexpected interference between some tube support plates. The stay rod (equivalent to tie rods at other unit) and shroud material for the replacement steam generators have been selected to have similar coefficients of thermal expansion which would preclude a similar problem.

Steam Generator Degradation Assessment 51-9176667-001 (prepared by AREVA) supporting steam generator inspections during the current outages for Units 2 and 3 evaluated industry operating experience relating to steam generator in-service inspections. This included operating experience reports, including NRC Information Notice 2010-05, "Management Of Steam Generator Loose Parts And Automated Eddy Current Data Analysis," relating to eddy current test probe issues and data analysis errors. In response to these issues, SCE personnel stated that specific training was given to the data analysts at SONGS on the lessons learned from these experiences and where applicable, appropriate data was included in the SONGS site specific performance demonstration. The licensee also described additional measures that would be taken at SONGS to address these issues. The review also addressed operating experience reports dealing with unexpected tube support indications or lack thereof. In response, SCE stated that indicated anti-vibration bar locations by eddy current will be compared to the anti-vibration bar locations specified in the Mitsubishi design drawings.

Steam Generator Degradation Assessment 51-9176667-001 also addressed numerous operating experience reports involving loose parts and foreign objects in steam generators, including several instances involving resultant damage to steam generator tubing. These reports included NRC Information Notices 2004-10, "Loose Parts in Steam Generators," 2004-16, "Tube Leakage Due to a Fabrication Flaw in a Replacement Steam Generator," and 2004-17, "Loose Part Detection and Computerized Eddy Current Analysis in Steam Generators." Some of these reports dealt with eddy current probes, or pieces of probes, which were left behind as loose parts on the primary side. Most of the operating experience reports related to lose parts and foreign objects on the steam generator secondary side. In response, SCE approach for addressing this issue was through procedure changes and secondary side visual inspections which included the open tube lane, the entire peripheral annulus, and appropriate visual examination followup on eddy current indications of possible loose parts. The inspection with the exception of the loose parts component was performed, as scheduled, during the current refueling outage for SONGS Unit 2. The inspection for loose parts will be performed at the first scheduled inspection during the next refueling outage. The team noted that possible loose parts indications were not found during the 100 percent eddy current test inspection of the Unit 3 steam generators during the current outage. The team also noted that secondary side visual inspections were performed in the upper

bundle area of the Unit 3 steam generators to evaluate the tube-to-retainer bar intersections and in a limited area above the 7th tube support plate.

The NRC staff issued many generic communications relating to steam generator tube integrity issues since the 1980s. The team reviewed these documents and determined that many of these related to the potential for stress corrosion cracking of the tubes which the staff found was not expected to be a concern for the thermally treated Alloy 690 material in the SONGS replacement steam generators by virtue of its greatly enhanced resistance to stress corrosion cracking. Most of the others related to problems encountered with eddy current flaw detection and sizing, the occurrence and detection of loose parts/foreign objects, and monitoring of primary to secondary leakage. The team's review indicated that lessons learned from these NRC generic communication documents had generally been incorporated into industry guideline documents relating to steam generator inspections, monitoring of primary-to-secondary leakage, and other guidelines documents prepared by the Electrical Power Research Institute. This information was incorporated into the licensee's inspection and leakage monitoring guidelines.

The team reviewed NRC generic communications not falling into one of the above categories for potential relevance to SONGS Unit 2 and 3. One of these was NRC Information Notice 2004-16 concerning an operational leakage event at another plant due to damage caused by a packing screw during transport to the steam generator manufacturer. The licensee stated in its steam generator change package that this incident was precluded for SCE by prohibiting the use of screws and nails as fasteners for tubing shipping crates. The licensee also addressed NRC Information Notice 2007 37, "Buildup of Deposits in Steam Generator," concerning fatigue of a low row u-bend at a foreign unit as a result of deposit build up and lack of support for the low row u-bend. Engineering Change Package NECP 800071703 specified that this type of incident was precluded in the replacement steam generators by virtue of anti-vibration bar supports extending to the low row u-bends. Steam Generator Degradation Assessment 51-9176667-001 documented that this type of problem reflected an advanced stage of deposit accumulation that was not anticipated for the foreseeable future in the SONGS replacement steam generators.

c. ~~Conclusions~~

~~The team's review indicated that lessons learned from these NRC generic communication documents had generally been incorporated into industry guideline documents relating to steam generator inspections, monitoring of primary-to-secondary leakage, and other guidelines documents prepared by the Electrical Power Research Institute. This information was incorporated into SCE's design specifications, inspection and, leakage monitoring guidelines.~~

7.0 Packing, Shipping, Handling, and Receipt Inspection (Charter Item 7)

a. Inspection Scope

The team interviewed licensee personnel involved with the packing, shipping, handling,

and receipt inspection of the replacement steam generators. In addition, the team reviewed SCE receipt acceptance criteria to assess if critical attributes were appropriately specified and if the licensee had the ability to assess acceptability of meeting those acceptance criteria. The team reviewed evaluations associated with supplier deviation reports, nuclear notifications and changes to handling specifications. With respect to replacement steam generators the team focused on differences in SONGS shipping, handling, and receipt acceptance between the Unit 2 and 3 steam generators from the manufacturing site in Japan to final installation on site.

b. Observations and Findings

No findings were identified.

The team identified three unresolved items for which additional information is required to determine if performance deficiencies exist or if the issues constitute violations of NRC requirements.

(1) Introduction: The team identified an unresolved item associated with Unit 3 steam generators not shipped in accordance with specification SO23-617-01, "Design and Fabrication of Replacement Steam Generators for ~~Unit 2 and Unit 3," Revision~~ 4, Units 2 and 3" (title does not match Documents Reviewed section – please check other titles for your sections) and requirements for handling, storage, and shipping. Specifically, ANSI N45.2-1977, "Quality Assurance Program Requirements for Nuclear Facilities," required a special protective environment for handling, storage, and shipping of the replacement steam generators. However, because of schedule changes, the Unit 3 protective environment which included maintaining a nitrogen pressure and a monitoring plan was altered significantly.

Description: The team evaluated specifications associated with the shipping and handling of the Unit 2 and 3 replacement steam generators. Based on the information evaluated by the team, the steam generators procurement and shipping specifications required monitoring and maintenance of nitrogen atmosphere inside the replacement steam generators during shipment. Supplier Deviation Request SDR 10041870-09091 dated December 1, 2009, documents a request "not to control the positive pressure, the dew point of nitrogen, and the oxygen content on the primary and secondary side of the Unit 3 replacement steam generators to accelerate delivery schedule."

Specification SO23-617-01, "Design and Fabrication of Replacement Steam Generators for Units 2 and 3," Revision 4, Section 3.16.3, specifies the supplier shall be responsible for monitoring and maintaining nitrogen atmosphere inside the steam generators during their shipping from Mitsubishi to the California port discharge point. The team noted that Unit 3 steam generators did not require, monitoring or control of dew point, oxygen concentration, inside nitrogen pressure. The team could not identify if this was properly evaluated (Reference Section 5 of shipping and handling procedure SO23-617-1-M1350).

Additional review and follow up will be required to review the evaluations and corrective actions associated with the maintaining the Unit 3 replacement steam

generators protective environment during shipping and then determine whether this issue represents a performance deficiency or constitutes a violation of NRC requirements. This issue is identified as URI 05000362/2012007-05, "Shipping Requirements not in Accordance to Industry Standards."

(2) Introduction: The team identified an unresolved item associated with the shipping and handling specifications requiring methods of tube bundle support. The team could not determine if this requirement to provide a tube bundle support method was adequately evaluated by SCE.

Description: Based on the information gathered by the team on shipping and handling specifications associated with the Unit 2 and 3 replacement steam generators, the team could not determine that Mitsubishi or SCE adequately considered the potential impact of not providing methods of tube bundle supports as required in ~~Specification~~ SO23-617-01~~,~~, "Design and Fabrication of Replacement Steam Generators for Units 2 and 3." In response to the team questions regarding tube bundle support methods~~,~~ the team was provided with results from Procedure L5-04GA069, "Sagging Measurement Procedure," Revision 7. However the team noted the procedure is considered a non-quality affecting procedure and used for reference only.

Additional review and follow up will be required to review the evaluations associated with the requirements to provide tube bundle support during shipping for the Unit 2 and 3 steam generators and then determine whether this issue represents a performance deficiency or constitutes a violation of NRC requirements. This issue is identified as URI 05000362/2012007-06, "Shipping Requirements not in Accordance to Design and Fabrication Specifications."

(3) Introduction: The team identified an unresolved item associated with evaluation of excessive shipping induced forces of Unit 3 replacement steam generator 3E-088.

Description: The team reviewed the SG shipping accelerometer data reports for both Unit 2 and Unit 3. In addition, the team also reviewed shipping and handling records and identified the following:

- Different transoceanic shipping companies and ships were used (U2: Happy Ranger, U3: Enchanter)
- During the discharge from the ship Unit 3 replacement steam generator 3E0-88 (3B) recorded simultaneous signals on the three attached accelerometers
- Unit 3 steam generator 3E0-88 was the only steam generator to record simultaneous signals on the three attached accelerometers
- Unit 3 steam generators received significantly more accelerometers hits compared to Unit 2

Unit 3 replacement steam generator 3E0-88 accelerometers indicated up to a 1.23 g spike with a simultaneous recording on all three of the attached accelerometers. Mitsubishi provided an evaluation of the forces which showed loads were within

allowable stress limits but exceeded stress for an operating basis earthquake. The team was not able to determine if this was properly considered.

Additional review by the NRC is required to fully assess if the shipping forces contributed to the tube-to-tube wear in Unit 3 and then determine whether this issue represents a performance deficiency or constitutes a violation of NRC requirements. This issue is identified as URI 05000362/2012007-07, "Unit 3 Steam Generator ~~3E0-88~~ 3E-088 Stresses Related to Handling."

~~c. Conclusions~~

~~The team identified three unresolved items related to the shipment of Unit 3 steam generators; however, the team did not identify any connection between these shipping changes and the unexpected tube-to-tube wear.~~

~~The unresolved items are :~~

- ~~Shipping Requirements not in accordance with Industry Standards~~
- ~~Shipping Requirements not in accordance with Design and Fabrication Specifications~~
- ~~Unit 3 Steam Generator 3E0-88 Stresses Related to handling~~

## 8.0 Thermal-hydraulic and Flow Induced Vibration Modeling (Charter Item 8)

a. Inspection Scope

The team conducted and overall review of Mitsubishi thermal-hydraulic design documents and drawings used in the manufacture of the Units 2 and 3 steam generators. The team developed an independent ATHOS model to run simulations for various operating conditions to assess thermal-hydraulic phenomena in the steam generators and assess differences in key parameters based on changing operating conditions. The objective of the modeling was to understand the interactions of the key parameters to compare ATHOS modeling results to the degradation trends found during the eddy current inspections.

~~The team reviewed portions of the vibration modeling. Two~~The team was not able to perform any independent tube vibration analysis because the NRC does not have the associated vibration software programs. However, since two key outputs of the thermal-hydraulic code are inputs to the vibration model, the ATHOS model results for fluid velocity and void fraction were used to predict increases or decreases in vibration forces and amplitude.

b. Observations and Findings

No findings were identified.

The team identified one unresolved item for which additional information is required to determine if a performance deficiency exists or if the issue constitutes a violation of NRC requirements.

(1) Introduction: The team identified an unresolved item associated with the adequacy of Mitsubishi's FIT-III thermal-hydraulic code. The FIT-III code predicted non-conservative low velocity and low void fraction results which were used as inputs to the vibration code FIVATS. These non-conservative thermal-hydraulic results lead Mitsubishi to conclude that margins to instability were significantly larger than they actually were.

Description: Replacement steam generators were designed and manufactured in accordance with SONGS Design Specification SO23-617-~~1 and~~1, "Conformed Specification for Design and Fabrication of Replacement Steam Generators for Unit 2 and Unit 3," Revision 4 and ASME Section III, "Rules for Construction of Nuclear Facility Components". The replacement steam generators had enhanced materials and maintenance.

The tube bundle, comprised of 9727 u-tubes, is supported by a set of seven tube support plates which are maintained and spaced by a network of tie-rods. The ends of the u-tubes were welded onto the tube sheet lower face cladding and were full depth expanded in the tube sheet holes. The u-bends are supported by a set of 6 anti-vibration bars, having a maximum of 12 contact points, in the center of the bundle. For shorter tubes near the periphery, a fewer number of anti-vibration bars are present.

One of the major enhancements of the replacement steam generators was the use of Alloy-690 tubing versus Alloy-600 for corrosion resistance. Alloy-690 has lower heat conductivity so, to achieve ~~the~~ same power, the heat transfer surface area must be increased by at least 10 percent. This required more tubes to be used in the replacement steam generators. The increased number of tubes resulted in a more tightly compacted tube bundle and elimination of the stay cylinder. The increase in the number of tubes could lead to increases in primary reactor coolant flow through the steam generators. Orifices were ~~machined as part of~~installed in the steam generator inlet nozzles to ensure maximum allowed primary system flowrates were not exceeded.

The tube layout indexing or incrementation used in these generators was smaller than other replacement steam generator designs. The tighter indexing results in smaller pitch/diameter ratio in critical regions of the tube bundle u-bends. In addition, it was noted that the anti-vibration bar support structure is not connected to the wrapper for lateral or vertical support; instead the anti-vibration bar system structure is only supported vertically by resting on the tubes.

Other operational and physical comparisons of the replacement steam generators and original steam generators were reviewed by the team and no significant differences were noted.

Additional review by the NRC is required to fully assess the adequacy of Mitsubishi's FIT-III thermal-hydraulic code and then determine whether this issue represents a performance deficiency or constitutes a violation of NRC requirements. This issue is identified as URI 05000362/2012007-08, "Non-Conservative Thermal-Hydraulic Model Results."

~~(2)~~8.1 Thermal ~~Hydraulic and Vibration~~hydraulic Assessments

The replacement steam generators thermal hydraulic operation and responses were based on the steam generator design geometric characteristics and operating parameters of the reactor coolant flow and temperature and the secondary feedwater flow and temperature. Calculations were performed for 0 to 100 percent power, beginning-of-life and end-of-life conditions considering limiting tube plugging and fouling. The important actual operating parameters selected for use in the model were saturation pressure, circulation ratio, steam flowrate, tube and shell side pressure drops, water and steam inventories, and global heat transfer coefficient.

Mitsubishi used the SSPC (Steady State Performance Calculation) code to compute these operational parameters, as described in Mitsubishi Document L5-04GA510, "Thermal and Hydraulic Parametric Calculations," Revision 5. The FIT-III code was used to determine thermal-hydraulic fluid flow conditions, with the results described in Mitsubishi Document L5-04GA521, "3D Thermal and Hydraulic Analysis," Revision 3. The FIVATS code was used to compute tube stability ratios that are used to predict tube vibration, with results described in Mitsubishi Document L5-04GA504 "Evaluation of Tube Vibration," Revision 3. In addition, the ABAQUS code was used compute stress and natural vibration frequency, and a code called IVHET was used for tube wear analysis. The key design code for tube

bundle design and vibration analysis is thermal-hydraulic code FIT-III since it computes the two key parameters (fluid velocity and density[1]) that are the primary contributors to the onset of fluid-elastic instability, which indicates the potential for excessive tube vibration.

The Mitsubishi acceptance criterion for vibration was to avoid fluid-elastic instability of tube spans by keeping the calculated stability ratios less than 1. Mitsubishi used the approach given in the ASME code Section III, Division 1, Appendix N-1330, "Flow-Induced Vibration of Tubes and Tube Banks," to calculate stability ratios and they also avoided natural frequencies of the tubes similar to the reactor coolant pump dynamic frequencies.

Design specific flow induced vibration analysis was performed for select U-bend tubes exposed to the greatest vibration risk, generally those with longest unsupported length under most limiting operating condition (lowest steam pressure, end of life design conditions). The phenomenon of fluid-elastic instability of tubes is characterized by cross-flow velocity (for out-of-plane mode) and normal velocity (for in-plane mode) where the local velocities exceed a critical velocity value (given via Conners' Equation[2]). The parameter of local velocity divided by critical velocity is referred to as stability ratio. The accuracy of calculating fluid-elastic instability is limited based on inputs that are best determined by design-specific mockup test data. Mitsubishi did not perform design-specific mockup tests, but used generally accepted test data, and other data based on Mitsubishi test rigs that were not specific to the SONGS replacement steam generator design.

If operating velocities reach this critical value, vibration amplitudes can increase rapidly and fluid-elastic instability forces can lead to rapid pulsation and damaging of tubes. The U-bend region is most susceptible because (1) the local fluid has a higher void fraction, with high velocities; (2) the fluid flow is in a direction normal to the tube, and (3) the anti-vibration bars are limited in their dampening capability along the plane of the tubes. Traditional design of anti-vibration bar systems have not considered in-plane fluid forces since it was accepted that the rigidity and dampening strength of the tube in this direction was adequate to preclude it. This event at SONGS is the first US operating fleet experience of in-plane fluid-elastic instability, sufficient to cause tube-to-tube contact and wear in the U-bend region.

The team noted that Design Specification SO23-617-1, "Conformed Specification for Design and Fabrication of Replacement Steam Generators for Unit 2 and Unit 3," Revision 4, did not address specific criteria for stability ratio and does not mention fluid-elastic instability. The team did find that the Mitsubishi calculated design values for stability ratios did not exceed 0.5. It is important to note, that each steam generator manufacturer has different design values for maximum stability ratios; therefore there is no standard value. The smaller that the design stability ratio is (has to be less than 1), the more margin to fluid-elastic instability.

---

[1] Void fractions and density are inversely proportional.

[2] Fluidelastic Vibration of Heat Exchanger Tube Arrays, Journal of Mechanical design – Volume 100 – April 1978, H.J. Connors, JR.

Mitsubishi computed the flow-induced vibration status of the steam generators in Document L5-04GA504, "Evaluation of Tube Vibration," Revision 3. The critical flow velocity, Uc, was obtained using the Connors' Equation based on output fluid velocities and densities from their FIT-III thermal-hydraulic model. The critical flow velocity is then calculated based on damping ratio, tube mass, tube outside diameter, averaged local cross flow gap velocity, and fluid density per selected tube. The method is based on formulations given in the ASME code Section III, Division 1, Appendix N-1330, "Fluid Elastic Instability". The ratio of normal-to-tube cross flow gap velocity to this critical velocity defines the "stability ratio".

Steam generator vendors must develop specific methods based on the thermal-hydraulic code selected and experimental data used to determine coefficients in the Conners' Equation for their particular steam generator design. The experimental data used ~~in determining~~justify the ~~coefficients~~methods can be developed from in-house tests or taken from published industry data. Mitsubishi indicated that in their methodology two conservatisms were used in their bundle vibration analysis: (1) FIT-III gap velocities were averaged and multiplied by 1.5 and (2) one of 12 anti-vibration bars contacts were assumed to be inactive. The team noted that in Mitsubishi Document L5-04GA504, "Evaluation of Tube Vibration," Revision 3, the 1.5 multiplier was not an added conservatism but a requirement, needed to match test data results.

The team developed an independent model of the new steam generators using the ATHOS thermal hydraulic code[3]. The calculations were intended to assess operating cycle differences between Units 2 and 3 steam generators and review thermal hydraulic phenomena within the steam generators in order to investigate key parameters and causal factors for the excessive tube wear rates. The NRC ATHOS calculations determined that the differences in primary inlet temperature and steam flow between the units were negligible. NRC ATHOS results indicated high void fractions and high u-bend gap velocities existed in the bundle as compared to Mitsubishi FIT-III analyses used for design.

Mitsubishi provided a comparison of their ATHOS model to their FIT-III model results. The Mitsubishi ATHOS model fluid velocities were ~~approximately~~2.5 to 3 times higher than the FIT-III model velocities with the 1.5 multiplier applied. Other independent code calculations, including an analysis by Westinghouse using their in-house modified version of ATHOS and an analysis by AREVA using their French code CAFCA4 showed similar thermal-hydraulic results (up to 4 times higher velocities than FIT-III) as those computed in the Mitsubishi ATHOS results and the NRC independent ATHOS calculations. Based on these comparisons, it was concluded that the FIT-III code and model results used for design were non-conservative even with the multiplier applied.

---

[3] ~~ATHOS~~ATHOS3/SGAP Version 3.~~1~~1-0-S: A Computer Program for Thermal-Hydraulic Analysis of ~~the Thermal-Hydraulics of a~~ Steam ~~Generator, 2008~~

~~[4]R. Voilette, M. J. Pettigrew, N. W. Mureithi, "Fluidelastic Instability of an Array of Tubes Preferentially Flexible in~~Generators, February 2005 **(need to verify this is the version that the ~~Flow Direction Subjected to Two Phase Cross Flow," Trans. ASME, Journal of Pressure Vessel Technology, 128, 148 (2006).~~NRC has a license for use. Did Carl re-run the ATHOS model using newest version and did it change our results?)**

Most of the experimental work in fluid-elastic instability has been carried out for two-phase flow, with an air-water medium. Accepted industry data, as presented by the Mitsubishi, shows that in staggered array bundles (triangular pitch, pitch/diameter =1.33), the onset of tube instability for modern steam generators, such as SONGS steam generators, can start at tube gap velocities above 6 meter/sec (pending effectiveness of the dampening structure)[4]. (please add reference for this statement). The NRC ATHOS model results indicated that there was a substantial localized region in the lower hot side of the u-bends where velocities exceeded 6 m/sec.

The NRC ATHOS calculations were compared to gap velocities computed both with the Mitsubishi ATHOS and the FIT-III models. Since tube R142C88 was the only one common for each of the analyses, it can be used as basis for comparison. The effective peak velocities were as follows:

- NRC ATHOS – 5.2 m/sec
- Mitsubishi ATHOS – 5.6 m/sec
- Mitsubishi FIT-III – 2.5 m/sec

Both the NRC and Mitsubishi ATHOS results were reasonably consistent and strongly suggested that high velocities coupled with high void fraction were primary causal factors in the tube fluid-elastic instability and the excessive wear patterns observed in the Unit 3 steam generators.

The team reviewed the verification and validation of both the Mitsubishi FIT-III thermal-hydraulic and FIVATS tube vibration models as stated in Specification SO23-617-1, Revision 4. The specification required Mitsubishi to design and build the steam generators in accordance with ASME NQA-1, "Quality Assurance Requirements for Nuclear Facility Applications," 1994, Subpart 2.7 "Computer Software" and Mitsubishi's quality assurance program.

The team reviewed Mitsubishi's verification and validation Report KAS-20050201, "FIT-III Code Validation Report," Revision 2. The report concluded the FIT-III code was valid for prediction of velocity and density behavior of two-phase flow under nominal conditions for the secondary side of PWR steam generators.

The team reviewed Mitsubishi's verification and validation Report KAS-20040253, "FIVATS Code Validation and Qualification Report," Revision 3. The FIVATS model was designed to calculate the stability ratios by using the flow velocity and density distributions from the FIT-III model. The FIVATS model primarily used the Conners' Equation, and validation was performed mainly by comparison to hand calculation; however, Mitsubishi used a mock-up test facility with a simple anti-vibration bar structure as part of their validation effort. The report concluded that adequate validation and qualification was performed to show compliance to software requirements and that the code could predict flow-induced vibration.

The team requested additional information as part of the verification and validation of the FIT-III thermal-hydraulic model. Mitsubishi provided several additional reports. One of the reports showed benchmarking comparisons to a French test facility

program called CLOTAIRE in 1986. Another report conducted in 2002, showed comparisons between FIT-III and ATHOS, and concluded that both codes had good correlation with the CLOTAIRE experimental data. Because of the limited information provided, the team could not determine the validity of the benchmarking of FIT-III.

Overall, the team determined that the validation and verification of the FIT-III code did not present overwhelming evidence that this code has been adequately benchmarked. The team did not find any problems with the validation of the FIVATS code.

~~(3)~~8.2 NRC ATHOS Results

Figures 1 through 4 (different view angles of same results) show results, with low $T_{hot}$ and low steam pressure and present a 3D isometric encapsulation of steam qualities (red scale) at and above 0.9 (i.e., void fraction > 0.99) and field velocities at and above 6.0 m/sec (white scale).

The ATHOS model results of high steam quality and steam velocity closely align with the area of concern (tube-to-tube wear) in the Unit 3 replacement steam generators. In Figure 5, the code predicted regions of high void fraction and high steam velocities (vertically located z-axis cut at about 20 inches above the 7$^{th}$ TSP) are superimposed with tube-to-tube wear indications from Unit 3 steam generator 3E0-88.

The tube-to-tube wear indications align with anti-vibration bar wear indication trends; however, the anti-vibration bar wear patterns appear to indicate a more square-like, essentially rectangular behavior that suggests that there may also be a mechanical, fabrication, assembly, and/or material contribution to the tube-to-tube wear degradation.

**Figure 1**

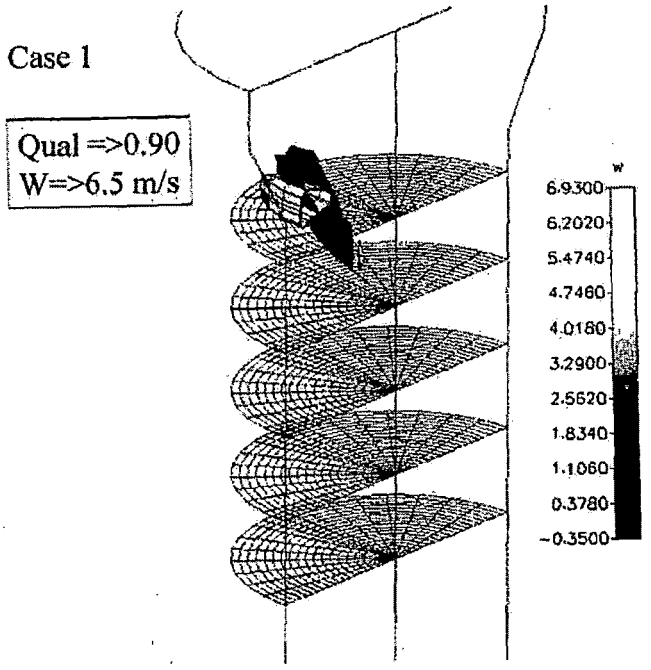
Case 1
Qual =>0.90
W=>6.5 m/s
W
6.9300
6.2020
5.4740
4.7460
4.0180
3.2900
2.5620
1.8340
1.1060
0.3780
-0.3500

**Figure 2**

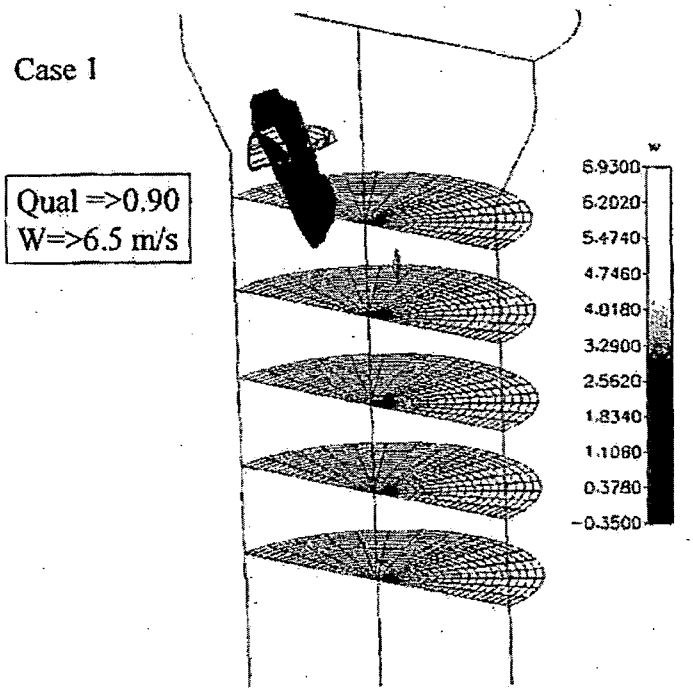


**Figure 3**

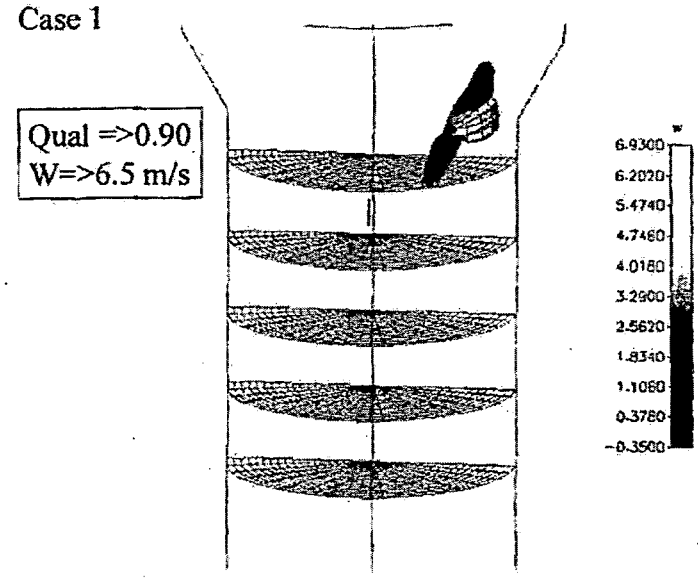

Case 1

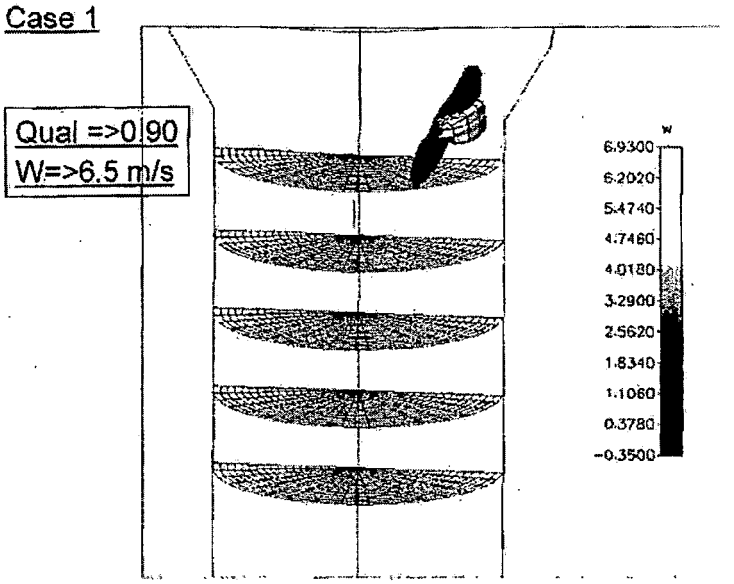


**Figure 4**

Case 1

Qual =>0.90
w=>6.0 m/s

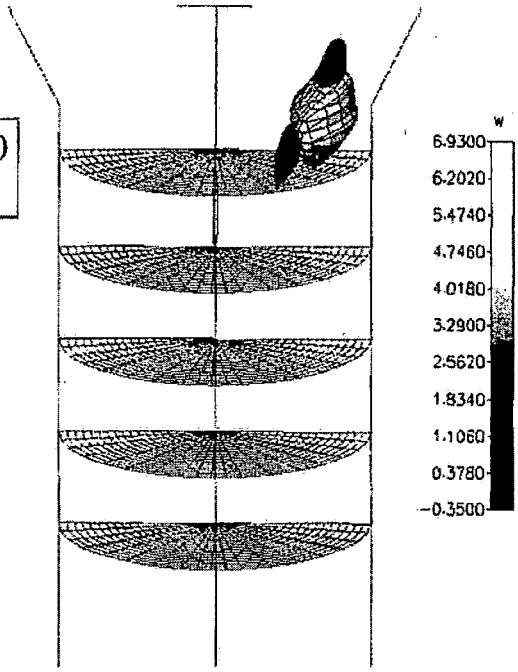

~~The ATHOS code predicted regions of high void fraction and high steam velocities are superimposed with tube-to-tube wear indications from Unit 3 steam generator 3E0-88~~

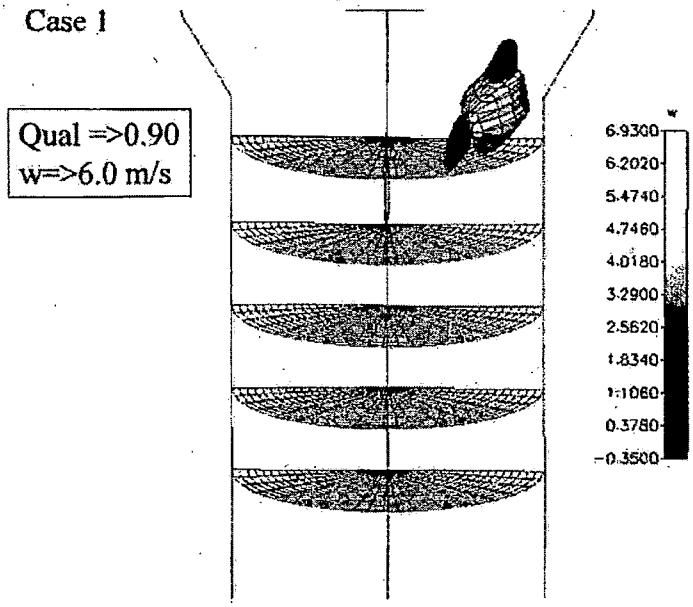


**Figure 5**

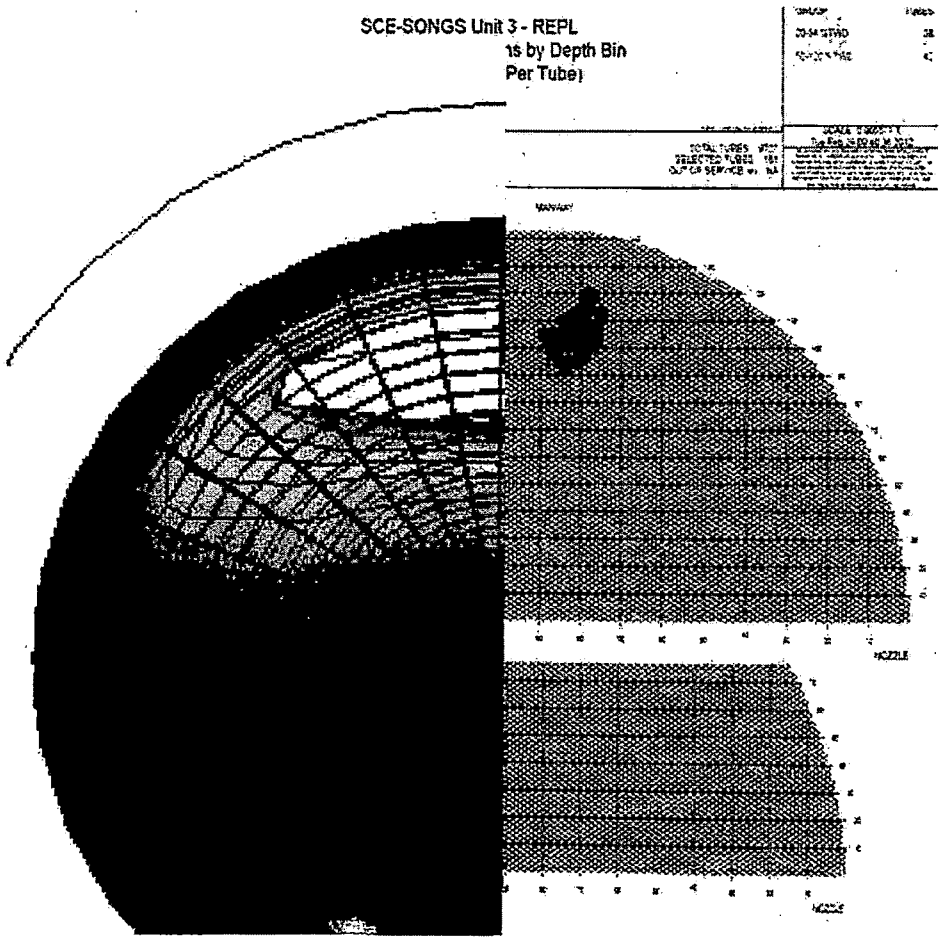


Enclosure

The NRC analysis indicated a correlation with the tube-to-tube wear based on a combination of high void fraction and high steam velocities. It should be noted that the traditional forcing function, fluid velocity squared times density, does not show good agreement with the tube-to-tube wear patterns. This indicated that the high quality steam fluid velocities and high void fraction may be sufficiently high to cause conditions in the generators conducive for onset of fluid-elastic instability.

The above analyses apply equally to Units 2 and 3, so it does not explain why the accelerated fluid-elastic instability wear damage was significantly greater in Unit 3 steam generators. The ATHOS thermal-hydraulic model predicts bulk fluid behavior based on first principals and empirical correlations and as a result it is not able to evaluate mechanical, fabrication, or structural material differences or other phenomena that may be unique to each steam generator. Therefore this analysis cannot account for these mechanical factors and differences which could very likely also be contributing to the tube degradation.

~~6.~~8.3 Conclusion

~~The team identified one unresolved item associated with the non-conservative FIT-III thermal-hydraulic model results.~~

Based on independent NRC thermal-hydraulic analysis, the team concluded that the SONGS replacement steam generators were not designed with adequate margin to

preclude the onset of fluid-elastic instability. Therefore unless changes are made to the operation or configuration of the steam generators, high fluid velocities and high void fractions in localized regions in the u-bend will continue to cause excessive tube wear and accelerated wear that could result in tube leakage and/or tube rupture. The deficiencies appear to be related to Mitsubishi's FIT-III thermal hydraulic code having predicted non-conservative low velocity results and low void fractions. These results ~~led~~lead Mitsubishi to conclude that margins to instability were significantly larger than they actually are. This assessment is based on eddy current data, NRC ATHOS analysis, Mitsubishi ATHOS analysis, and other thermal-hydraulic analyses completed by Westinghouse and AREVA that all identified significantly higher fluid velocities and void fractions than FIT-III.

Based on the cause evaluation and corrective action plan, SCE determined that the best solution to prevent tube-to-tube wear was to conservatively plug and stabilize the affected areas. By taking the impacted tubes out-of-service, SCE determined that this should reduce the potential for localized fluid velocities reaching critical velocity. In addition, in order to ensure sufficient margin to preclude the onset of fluid-elastic instability, SCE determined that reactor power would also have to be reduced. At this time SCE is still developing additional corrective actions to prevent tube-to-tube wear. The actions have not been finalized and no determination has been made concerning the appropriate power level. The NRC has not made any conclusions on the proposed corrective actions. Once the corrective actions have been finalized, they will be ~~inspected~~reviewed and evaluated as part of the Confirmatory Action Letter followup inspection.

9.0 Risk Assessment (Charter Item 9)

a. Inspection Scope

The team reviewed the steam generator tube leak and failures of multiple steam generator tubes during in-situ pressure testing to support an assessment of the risk of the degraded steam generator tubes during various accident conditions, including a main steam line break accident.

b. Observations and Findings

No findings were identified.

An NRC senior reactor analyst ~~performed a preliminary~~ is currently working with SCE risk assessment. ~~The risk is composed of two parts: (1) a non-consequential steam line break that induces a steam generator tube rupture, specifically involving the degraded tubes; and (2) an elevated risk of a tube rupture as an initiating event.~~

~~Assuming that a steam line break would cause the degraded steam generator tubes~~ personnel to ~~rupture during a "T/2" exposure period of 6 months yielded a change in the large early release frequency of 4E-6/yr. However, SCE informed the NRC that a calculation is under review that will likely indicate that the differential pressures generated by a steam line break would not be large enough to rupture the degraded tubes as long as operators successfully implemented their emergency procedures. If this is confirmed,~~ determine the risk associated with ~~steam line breaks will be significantly reduced.~~

~~Although in this case the degraded condition of the tubes was manifested as a small primary to secondary leak, it is possible that a full-blown rupture could have been the first indication. The baseline core damage frequency of a steam generator tube rupture, according to the SONGS SPAR model, is 4.26E-7/yr. Because of an unmitigated bypass of containment, the large early release frequency is also 4.26E-7/yr. Assuming conservatively that the steam generator tube rupture frequency would at least double, the increase in large early release frequency attributable to the degraded tubes would be approximately 2.13E-7/yr (taking into account a 6-month exposure period).~~

~~It should be noted, this is a preliminary assessment of the risk requiring additional information and inspection to ascertain whether a performance deficiency exists. This does not include or preclude regulatory or enforcement action by the NRC~~the loss of tube integrity for multiple tubes.

Form

10.0 Assess Quality Assurance, Radiological Controls, and Safety Culture Components (Charter Item 10)

a. Inspection Scope

The team reviewed the event, operator actions, management decisions, steam generator eddy current examinations, in-situ pressure testing, and tube plugging and

stabilization activities to determine whether issues related to quality assurance, radiological controls, or safety culture existed.

b. Observations and Findings

No findings were identified.

Region IV radiation protection inspectors reviewed the estimated offsite radiation exposure from the actual steam generator tube leak on Unit 3 steam generator 3E0-88 that occurred on January 31, 2012, including the potential dose consequence to site workers and members of the public. The licensee determined that the Unit 3 steam generator tube leak resulted in a release of gaseous effluents into the public domain, and the primary radionuclides released were argon-41, xenon-133, and xenon-135. The release resulted in an estimated 0.0000452 (4.52 E-5) mrem dose to the public. Inspectors also reviewed design drawings and radiation monitor data, performed plants tours, and confirmed the licensee's use of the offsite dose calculation methodology.

~~c. Conclusions~~

~~The Region IV radiation protection~~The inspectors concluded that the Unit 3 steam generator tube leak was detected by the condenser steam jet air ejector radiation monitor 3RT-7820 as per design. In addition, the radiation monitor 3RT-7820 alarmed and alerted SONGS operators of the steam generator tube leak as required. ~~The inspectors concluded that SCE appropriately accounted for the unplanned release associated with the Unit 3 steam generator tube leak.~~

Form

11.0 Operational impacts from Unit 3 to Unit 2 (Charter Item 11)

a. Inspection Scope

As follow-on of the previous sections, the team reviewed collections of the Mitsubishi documents and presentations, licensee documents and presentations, and NRC independent analysis and assessments to consider the operational impact on Unit 2 based on analysis and data, including eddy current results, regarding the as-found condition of Unit 3. The team compared key observations and overall differences in operational parameters that are common to both units that could affect and possibly limit Unit 2 operation. The team focused on differences in fabrication, manufacturing, operation, and eddy current data results between Units 2 and 3 steam generators.

b. Observations and Findings

No findings were identified.

Based on the review of current Cycle 16 operating data and independent NRC analysis it does not appear that there were any major difference in the thermal hydraulic phenomena at normal full power operation. Since generator physical dimensions and design are identical, the operational parameters are basically the same between the Unit 2 and 3 steam generators; therefore, the hydraulic forcing function that caused tube-to-tube wear and accelerated anti-vibration bar and tube support plate wear should also be same. The initial inspections of the Unit 2 steam generators did not indicate significant wear except at the retainer bars (different mechanism caused this wear). However, subsequent follow up inspections in Unit 2 with a more sensitive probe confirmed the existence of minor tube-to-tube wear in two neighboring tubes but in one of the steam generators. The tube-to-tube wear that was found in Unit 2 was in a similar location as that found in both of the Unit 3 steam generators.

The phenomenon of fluid-elastic instability is a function primarily of two criteria: the fluid velocity forces and the damping capability of the support structure (i.e., the tube support plates, the tubesheet, and the anti-vibration bars). Therefore, if it is determined that the thermal hydraulic forces in the bundle are the same, it can be concluded that the damping forces between the Unit 2 and Unit 3 replacement steam generators must be different. Mitsubishi performed several studies that indicated that gap contact forces in the anti-vibration bars were greater in Unit 2 than in Unit 3. However, with the exception of manufacturing data that shows slight differences, there is not currently a method available to measure the clearances between the anti-vibration bars and the tubes; however, SCE is currently working with AREVA to develop a method to take these measurements.

The tube damage found in Unit 3 is markedly more severe than Unit 2, especially considering that Unit 3 operated only about half the amount of time as Unit 2. This suggests that there is indeed a sizeable difference in the damping capability of the unit steam generators.

There are generally two options to arrest localized damaging thermal hydraulic phenomena in steam generators. The first and preferred option is to plug tubes in the

affected area. The collective plugging tends to relocate and reduce high fluid velocities and void fractions, and has on previous occasions in industry been successful. However, if plugging selected tubes does not provide significant margins adequate to arrest the damage mechanism, thermal hydraulic conditions can be reduced through a reduction in power. Reducing power has several beneficial effects including (1) tends to increase steam pressure, (2) reduces high steam fluid velocities and high void fraction in the bundle, and (3) improves damping. Currently, SCE is still reviewing and developing additional corrective actions to preclude fluid-elastic instability. The NRC has been observing some of the mockup testing being used to qualify additional repair activities.

~~c. Conclusions~~

~~Based on the review of actual operating data and independent thermal-hydraulic modeling analyses, the team determined that there were no major differences in the thermal-hydraulic phenomena at normal full power operation.~~

~~The NRC will review both physical and operational changes that SCE completes as part of the Confirmatory Action Letter inspections.~~

12.0 Mitsubishi Divider Plate Manufacturing and Weld Issues (Mitsubishi Charter Item 2)

a. Inspection Scope

On March 18, 2009, Mitsubishi identified cracking indications in the weld between the divider plate and the channel head of Unit 3 replacement steam generator 3E0-88 (see figure below), after completion of the ASME Section III hydrostatic test on the secondary side. The extent of condition investigation also identified similar cracking indications in Unit 3 replacement steam generator 3E0-89. As discussed in Section 4 of this report, the cause of the cracking was attributed to the air carbon-arc gouging process used to remove the clad weld from the channel head. The team reviewed information associated with the repair of the cracking indications to assess whether the repair activities resulted in relevant differences in design and fabrication that could be considered as contributing factors for the cause of the tube-to-tube wear issue in Unit 3.

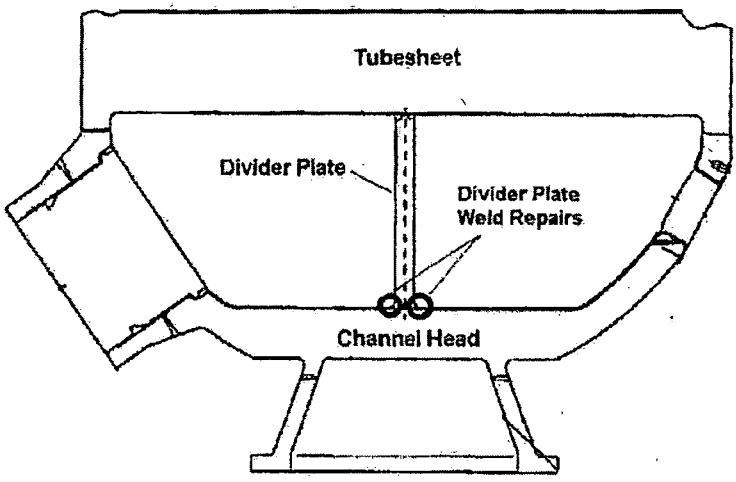


Location of Divider Plate Weld Repairs in Unit 3 Steam Generators (For Illustration Purposes Only)

Form
Form

b. Observations and Findings

No findings were identified.

The team identified an unresolved item for which additional information is required to determine if a performance deficiency exists or if the issue constitutes violation of NRC requirements. The team also identified several observations related to the divider plate weld repairs in Unit 3 replacement steam generators.

1) Introduction: The team identified an Unresolved Item associated with the adequacy of evaluation and controls for the divider plate weld repairs.

Description: The cracking of the divider plate weld in both Unit 3 replacement steam generators required extensive repairs affecting the channel head, divider plate, and tubesheet. Based on interviews with licensee personnel and the review of documentation for the repairs, the team determined that Mitsubishi did not perform a comprehensive evaluation to assess the impact of the divider plate repairs on the integrity of the tube bundle. The team determined that the areas listed below were not considered or evaluated in sufficient depth to identify the potential adverse effects of the planned weld repairs.

- Additional Rotations – The repair activities for the Unit 3 steam generators required additional rotations of the steam generator assembly while these were oriented in the horizontal position. The repairs resulted in approximately 300 additional rotations in each steam generator, which could have affected the configuration of the tube bundle in terms of anti-vibration bar gaps or distortion. The team identified that Mitsubishi did not fully evaluate the impact of additional rotations on the configuration of the steam generators since rotation was considered a normal evolution in the fabrication process.

- Heat Input – The repair process included extensive heat-adding activities such as grinding, flame cutting, and post-weld heat treatment. While these activities were performed in accordance with the construction code of record and an approved repair plan, they could have resulted in thermal expansion and unintended distortion of steam generator components. For example, the channel heads were removed using flame cutting and Mitsubishi's evaluation for the impact of this activity was limited to the base material area in the vicinity of the cut, i.e. the heat affected zone. Mitsubishi did not fully assess the impact this activity could have on the overall configuration of the steam generator in terms of thermal expansion of the tubesheet or distortion.

- Dimensional Checks after Repair – The team identified that Mitsubishi did not perform dimensional verifications (e.g. clearances) of the tube bundle or other secondary side dimensions after the repairs of the Unit 3 steam generators to confirm that critical dimensions were not affected by the repairs.

Additional review by the NRC is required following completion of the licensee's cause evaluation to fully assess how the repair activities affected the Unit 3 replacement steam generators and then determine whether this issue represents a performance

deficiency or constitutes a violation of NRC requirements. This issue is identified as URI 05000362/2012007-09, "Evaluation of the Effects of Divider Plate Weld Repairs in Unit 3 Replacement Steam Generators."

2) Repair Plan: The team noted that Mitsubishi developed a specific plan to conduct the repair of the divider plate weld in both Unit 3 replacement steam generators. The repair plan adequately described the major repair steps and the required implementing procedures. For some of the repair stages, the licensee developed new procedures to prescribe activities outside the normal fabrication sequence. The repair plan consisted of the following major steps:

   - Cutting off the divider plate from the tubesheet by grinding
   - Cutting off the channel head from the tubesheet by flame cutting
   - Cutting the divider plate from the channel head by grinding
   - Removal of the heat affected zone of the channel head bowl edge due to flame cutting
   - Application of weld buildup and post-weld heat treatment on the channel head bowl edge
   - Application of low alloy steel buildup and Alloy 690 butter on the bottom of the channel head for divider plate welding, including required post-weld heat treatment
   - Application of Alloy 690 buildup on the divider plate, including required post-weld heat treatment
   - Welding divider plate to channel head
   - Welding the divider plate to the tubesheet
   - Welding the channel head to the tubesheet
   - Primary side hydrostatic test

3) Differences between Replacement Steam Generators: The team identified the notable differences listed below between Unit 2 and Unit 3 replacement steam generators as a result of the divider plate weld repair activities.

   - Material Class for the Tubesheets – The tubesheet material for both Unit 3 replacement steam generators was reclassified to facilitate the additional post-weld heat treatment required for the repair of the divider plate welds. The tubesheet manufacturer originally certified that the tubesheet material met the requirements of ASME specification SA-508/Grade 3/Class 2, with a post-weld heat treatment time of approximately 15 hours. The repair activities in Unit 3 required additional post-weld heat treatment, which was expected to affect the properties of the tubesheet material to the extent that the mechanical properties would not meet the requirements for SA-508/Grade 3/Class 2 material. Mitsubishi performed mechanical testing on a specimen fabricated from the archive samples that was exposed to 30 hours of post-weld heat treatment and the tests showed that the tubesheet material's tensile strength did not meet the ASME specifications for SA-508/Grade 3/Class 2 material. Mitsubishi performed a reconciliation review to reclassify the material to SA-508/Grade 3/Class 1,

which has a lower tensile strength. The reconciliation included an evaluation of resulting stresses on the tubesheet under design, upset, emergency, faulted, and test conditions using the material properties for SA-508/Class 1 material. The evaluation resulted in acceptable stresses based on the stress limits imposed by the construction code of record. This issue was evaluated by Mitsubishi in the non-conformance report process and Supplier Deviation Request SDR-~~08610041870~~-086 10041870-09086 was submitted to the licensee for review and approval. The licensee approved the reclassification of the tubesheet material.

- Minimum Thickness of the Channel Head Base Metal – The channel heads of both Unit 3 steam generators were removed by flame cutting to facilitate the divider plate weld repairs. The removal and final welding of the channel head resulted in a reduction of the minimum wall thickness of the channel head base metal. The minimum base metal thickness was reduced by 1.18-inches. Mitsubishi evaluated this change in the "Design Report for the Channel Head Region." The reduction in minimum wall thickness was addressed through a reconciliation of stress ratios based on the stress limits imposed by the construction code of record. The analysis demonstrated the structural adequacy of the channel head, primary inlet nozzle, primary outlet nozzle, primary manway, support skirt, and the stud bolts of the primary manway.

- Number of Bolts in the Divider Plate Patch Plates – The original design of the replacement steam generators included a patch plate held in place at the upper corners of the divider plate by three bolts. As a result of the divider plate-to-tubesheet weld removal to support the repair activities, the Unit 3 divider plate patch plates were modified to be held by two bolts instead of the three bolts specified in the original design. Mitsubishi submitted this design change to the licensee for review and approval. Licensee personnel approved the design change as requested.

- Weld Buildup on Channel Head Surfaces – Since the repair of the divider plate welds in Unit 3 steam generators required cutting of the channel head, weld buildup had to be applied on the affected surfaces in order to restore the dimensions to design specifications. Mitsubishi submitted this design change to the licensee for review and approval. Licensee personnel approved the design change as requested.

- Post Weld Heat Treatment – The tubesheet-to-channel head weld area experienced a total of two post-weld heat treatments. Both Unit 3 replacement steam generators received an additional local post-weld heat treatment at approximately 1103° F for approximately 3.5 hrs. Mitsubishi submitted this fabrication process change to the licensee for review and approval. Licensee personnel approved the design change as requested.

- Total of Rotations during Fabrication – The total number of rotations on each steam generator varied as a result of the hydrostatic test results and the repairs on the divider plate welds.

| Steam Generator | Initial Rotations | Additional Rotations for Divider Plate Repairs | Total Rotations |
|---|---|---|---|
| Unit 2 E0-89 | 520 | 0 | 520 |
| Unit 2 E0-88 | 510 | 0 | 510 |
| Unit 3 E0-89 | 470 | 340 | 810 |
| Unit 3 E0-88 | 440 | 320 | 760 |

~~c. Conclusions~~

~~The team identified one unresolved item associated with the repair work done on the Unit 3 divider plate. The team did not identify any connection between the repairs of the divider plate and the unexpected tube-to-tube wear.~~

13.0 Office of Nuclear Reactor Regulation (NRR) Review of SONGS 50.59 Evaluation

a. Inspection Scope

The NRR technical specialist reviewed all of the design changes associated with the replacement steam generators to determine whether the changes to the facility or procedures, as described in the updated final safety analysis report, had been reviewed and documented in accordance with 10 CFR 50.59 requirements. The technical specialist reviewed the various information used by SCE to review the changes being made to the replacement steam generators, including calculations, analyses, design change documentation, procedures, the updated final safety analysis report, the technical specifications, and plant drawings. The evaluation process used by the technical specialist included determining if the design changes to the replacement steam generators were a change to the facility or procedures as described in the updated final safety analysis report or a test or experiment not described in the updated final safety analysis report. The technical specialist also verified that safety issues related to the changes were resolved. The technical specialist compared the safety evaluations and supporting documents to the guidance and methods provided in NEI 96-07, "Guidelines for 10 CFR 50.59 Implementation," Revision 1, as endorsed by NRC Regulatory Guide 1.187, "Guidance for Implementation of 10 CFR 50.59, Changes, Tests, and Experiments," to determine the adequacy of the 10 CFR 50.59 evaluations.

b. Observations and Findings

No findings were identified

The NRR technical specialist identified one unresolved item for which additional information is required to determine if performance deficiencies exist or if the issues constitute violations of NRC requirements.

(1) Introduction: The NRR technical specialist reviewed SCE's 10 CFR 50.59 evaluation contained in Engineering Change Packages 800071702 and 800071703 for the Unit 2 and Unit 3 replacement steam generators, respectively, in which SCE determined that the impact of the replacement steam generators on the current licensing basis and any need for NRC approval as required by 10 CFR 50.59.

(2) Description: The NRR technical specialist reviewed the SCE's 10 CFR 50.59 evaluation against 10 CFR 50.59(c)(2)(viii) which requires that licensees obtain a license amendment pursuant to 10 CFR 50.90 prior to implementing a proposed change if the change would result in a departure from a method of evaluation described in the final safety analysis report (as updated) used in establishing the design bases or in the safety analyses. Industry guidance NEI 96-07, Revision 1, Section 3.10, "Methods of Evaluation," states, "Definition: Methods of evaluation means the calculational framework used for evaluating behavior or response of the facility or structures, systems, and components." Regulation 10 CFR 50.59 a(2), states, "*Departure from a method of evaluation described in the FSAR (as updated) used in establishing the design bases or in the safety analyses* means (i) changing any of the elements of the method described in the FSAR (as updated) unless the results of the analysis are conservative or essentially the same; or (ii) changing from a method described in the FSAR to another method unless that method has been approved by NRC for the intended application." Regulation 10 CFR 50.59(d)(1) requires that the licensee maintain records of changes in the facility that "includes a written evaluation which provides the bases for the determination that the change, test, or experiment does not require a license amendment...." The technical specialist evaluated SCE's bases for determining that the changes would not result in the departure from the method of evaluation used in establishing the design bases or in the safety analyses. Specifically, the technical specialist evaluated whether the changes involved:

(a) changing of any of the elements of the method described in the updated final safety analysis report, which consistent with 10 CFR 50.59 a(2)(i) would be justified by demonstrating that the results of the analysis are conservative or essentially the same; or

(b) changing from a method described in the updated final safety analysis report to another method, which consistent with 10 CFR 50.59 a(2)(ii) would be justified by demonstrating that method has been approved by NRC for the intended application.

The NRR technical specialist reviewed SCE's 10 CFR 50.59 evaluation and found two instances that failed to adequately address whether the change involved a departure of the method of evaluation described in the updated final safety analysis report.

(a) Use of ABAQUS instead of ANSYS: Updated Final Safety Analysis Report Sections 3.9.1.2.2.1.11 and 3.9.1.2.2.2.3 were revised to reflect that the SONGS Unit 2 and 3 original steam generators stress analyses for reactor coolant system structural integrity utilized the ANSYS computer program, whereas the replacement steam generators analyses utilized the ABAQUS computer program. The SCE's 50.59 evaluation incorrectly determined that using the ABAQUS instead of ANSYS was a change to an element of the method described in the updated final safety analysis report did not constitute changing from a method described in the updated final safety analysis report to another method, and as such, did not mention whether ABAQUS has been approved by the NRC for this application.

(b) Use of ANSYS instead of STRUDL and ANSYS: Updated Final Safety Analysis Report Section 5.4.2.3.1.3 was revised to reflect that the SONGS Unit 2 and 3 evaluation of tube stress under loss of coolant accident conditions for the original steam generators consisted of a two-step process utilizing the STRUDL and ANSYS computer programs to calculate displacement histories and tube stresses, respectively, while the corresponding replacement steam generators analysis determined tube stresses from blowdown forces using only the ANSYS computer program. While SCE's 50.59 evaluation correctly considered this a change from a method described in the FSAR to another method, the 50.59 evaluation did not mention whether the method has been approved by NRC for this application.

~~This issue is identified as URI 05000362/2012007-10, "Evaluation of Departure of Method of Evaluation for 10 CFR 50.59 Processes."~~

~~c. Conclusions~~

~~The NRR technical specialist identified one unresolved item associated with a change in the method of evaluation as described in the updated final safety analysis report.~~ Additional review and followup will be required to review the departure of the method of evaluation used during the stress analysis calculations associated with the replacement steam generators and then determine whether this issue represents a performance deficiency or constitutes a violation of NRC requirements. This issue is identified as URI 05000362/2012007-10, "Evaluation of Departure of Method of Evaluation for 10 CFR 50.59 Processes."

14.0 Exit Meeting Summary

On June 18, 2012, the NRC held a public meeting and presented the inspection results to Mr. P. Dietrich, Senior Vice President and Chief Nuclear Officer, and other members of the staff, who acknowledged the findings. Proprietary information was provided to the team and all proprietary information was returned to SCE.

**SUPPLEMENTAL INFORMATION**
**KEY POINTS OF CONTACT**

Licensee Personnel

P. Dietrich, Senior Vice President and Chief Nuclear Officer
R. Litzinger, President, SCE
D. Bauder, Vice President and Station Manager
T. Palmisano, Vice President of Engineering, Projects and Site Support
T. McCool, Plant Manager
T. Yackle, Assistant Plant Manager
D. Yarbrough, Director, of Operations
R. Corbett, Director, of Performance Improvement
O. Flores, Director, of Nuclear Oversight
R. St. Onge, Director, of Nuclear Regulatory Affairs
B. Winn, Director, of Nuclear Financial Management
E. Avella, Director, of Project Management
M. Coveney, Director, of Nuclear Leadership
M. Stevens, ~~Technical Specialist~~Title needed, Nuclear Regulatory Affairs
C. Cates, ~~Manager,~~ Nuclear Safety Culture and Site Recovery Manager
M. Malzahn, ~~Engineer,~~ Project Management Engineer
C. Harberts, ~~Manager,~~ Steam Generator Replacement Project Manager
M. Mihalik, Senior Engineer, Project Management Organization
R. McWey, ~~Manager,~~ Nuclear Oversight Manager
M. Pawlaczyk, ~~Technical Specialist,~~ Nuclear Regulatory Affairs Technical Specialist
J. Peattie, ~~Manager,~~ Maintenance Manager
R. Treadway, ~~Manager,~~ Nuclear Regulatory Affairs Manager
B. Olech, Consulting Engineer, Edison
~~J~~D. Brabec, Project Manager, Steam Generator Recovery Program
D. Calhoun, Senior Engineer, Design Engineering Organization, Edison

Mitsubishi Personnel

H. Kaguchi, Mitsubishi Heavy Industries, Director, Component Designing Department
I. Otake, Mitsubishi Heavy Industries, Deputy Chief Engineer, Quality Assurance Department
T. Tsuruta, Mitsubishi Heavy Industries, Engineer, Quality Assurance Department
T. Inoue, Mitsubishi Heavy Industries, Deputy Director, Plant Designing Department
H. Hirano, Mitsubishi Heavy Industries, Project Manager, Overseas Project, Component Designing Department
R. Bywater, Mitsubishi Nuclear Energy Systems, COLA ~~Project~~Licensing Manager
F. Gillespie, ~~Mitsubishi Nuclear Energy Systems, Senior Vice President~~
~~R. Godley, Mitsubishi Nuclear Energy Systems, Deputy General Manager, Licensing Support~~
R. Godley,

Other Contractor Personnel

R. Walker, MPR Consultant

M. Short, Consultant
~~B. Marlow, AREVA, Vice President, Key Accounts~~
~~M. Street, AREVA, Manager, Primary Component Projects and Warranty Support~~
~~M. Miller, AREVA, Advisory~~Bruce ?, Areva, TITLE NEEDED
??, ATHOS Engineer, NAME AND TITLE NEEDED
~~S. Claunch, AREVA, Advisory Engineer~~

NRC Personnel
T. Blount, Deputy Division Director, Division of Reactor Safety
R. Lantz, Branch Chief, Projects Branch D
G. Warnick, Senior Resident Inspector

## LIST OF ITEMS OPENED, CLOSED AND DISCUSSED

Opened

| | | |
|---|---|---|
| 05000362/2012007-01 | URI | Adequacy of the Trip/Transient and Event Review Procedure (Section 1) |
| 05000362/2012007-02 | URI | Evaluation of Unit 3 Vibration and Loose Parts Monitoring System Alarms (Section 3) |
| 05000362/2012007-03 | URI | Evaluation of Retainer Bars Vibration during the Original Design of the Replacement Steam Generators (Section 4 |
| 05000362/2012007-04 | URI | Evaluation of Changes in Dimensional Controls during the Fabrication of Unit 2 and Unit 3 Replacement Steam Generators (Section 4) |
| 05000362/2012007-05 | URI | Shipping Requirements not in Accordance with Industry Standards (Section 7) |
| 05000362/2012007-06 | URI | Shipping Requirements not in Accordance with Design and Fabrication Specifications (Section 7) |
| 05000362/2012007-07 | URI | Unit 3 Steam Generator ~~3E0-88~~E088 Stresses Related to Handling (Section 7) |
| 05000362/2012007-08 | URI | Non-Conservative Thermal-Hydraulic Model Results (Section 8) |
| 05000362/2012007-09 | URI | Evaluation of the Effects of Divider Plate Weld Repairs in Unit 3 Replacement Steam Generators (Section 12) |
| 05000362/2012007-10 | URI | Evaluation of Departure of Method of Evaluation for 10-CFR 50.59 Processes (Section 13) |

Closed

None

Discussed

None

## LIST OF DOCUMENTS REVIEWED

AUDITS/SELF-ASSESSMENTS/QUALITY CONTROL DRAWINGS

SONGS DOCUMENTS

| Number | Title | Revision/Date |
|---|---|---|
| MHI-1-06 | Southern California Audit of Mitsubishi Heavy Industries | June 16, 2006 |
| MHI-1-09 | Southern California Audit of Mitsubishi Heavy Industries | April 27, 2009 |
| MHI-2-04 | Southern California Audit of Mitsubishi Heavy Industries | December 14, 2004 |
| SCES-007-10 | Procurement and Material Control Program Audit | September 14, 2010 |
| MHI-01-04 | Evaluation and Review of Contractor, Consultant, Utility or Licensee Audit Report | September 24, 2004 |
| | Status of Southern California Edison (SCE) Corrective Action Request (CAR) Nos. S-1918 and S-1932 Closure | March 23, 2007 |
| | Southern California Edison (SCE) Corrective Action Request (CAR) No. S-1991, Supplier Stop Work Order (SSWO) No. SSWO-001-08 | 1 |
| SO123-XV-50 | Corrective Action Program | 25 |
| | RSG-SCE/MHI-06-2233 – Southern California Edison (SCE) Corrective Action Request (CAR) No. S-1882 Closure | May 3, 2006 |
| | RSG-SCE/MHI-06-1916 - Southern California Edison (SCE) Corrective Action Request, (CAR) No. S-1906 Closure | February 22, 2006 |
| | Southern California Edison (SCE) Audit No. MHI-1-06 and Corrective Action Request (CAR) Nos. S-1915, S-1916, S-1917, and S-1918 | January 31, 2008 |
| AR# 040901345 | Qualification Letter | September 24, 2004 |

| Number | Title | Revision/Date |
|---|---|---|
| AR#050301458 | Qualification Letter | March 23, 2005 |
| AR#060500134 | Qualification Letter | May 10, 2006 |
| 6C294014 | Edison Material Supply Procurement Order for Mitsubishi Heavy Industries | September 28, 2004 |
| SO23-617-01 | Specifications for design and fabrication of RSG for Unit 2 and Unit 3 | 4 |
| SO23-617-02 | Specifications for Baseline Pre-Service Examination on Tubing for RSG | 1 |
| SO23-617-03 | Replacement Steam Generator Installation Unit 2 and 3 | 4 |
| SO23-617-04 | Specifications for the Transportation of Replacement Steam Generators | 1 |
| TL C001783 | San Onofre Topical Report Quality Assurance Manual | 64 |
| TL C001782 | San Onofre 2&3 FSAR Updated Quality Assurance Program Topical Report SCE-1 | 15 |
| | SONGS Unit 2 & 3 Replacement Steam Generator QA/QC Manufacturing Oversight Plan Japan Steel Works | 0 |
| | SONGS Unit 2 & 3 Replacement Steam Generator QA/QC Oversight Plan | 1 |
| | SONGS Unit 2 & 3 Replacement Steam Generator Receipt Inspection Plan | 0 |
| SGR-A10183 | Replacement Steam Generator Resident Oversight Plan | 1 |
| SGR-A10159 | San Onofre Nuclear Generating Station Unit 2 & 3 Steam Generator Replacement Project Plan | 1 |
| MHI-1SV-05 | Source Verification Report of MHI/Japan Steel Work | March 15, 2005 |
| MHI-1SV-06 | Source Verification Report of MHI/Japan Steel Work | February 7, 2006 |
| MHI-1SV-07 | Source Verification Report of MHI | March 20, 2007 |
| MHI-1SV-08 | Source Verification Report of MHI/Japan Steel Work | August 29, 2008 |
| MHI-2SV-05 | Source Verification Report of MHI | April 1, 2005 |

| Number | Title | Revision/Date |
|---|---|---|
| MHI-2SV-06 | Source Verification Report of MHI/Japan Steel Work | March 24, 2006 |
| MHI-2SV-07 | Source Verification Report of MHI | November 2, 2007 |
| MHI-3SV-05 | Source Verification Report of MHI/Japan Steel Work | May 3, 2005 |
| MHI-3SV-06 | Source Verification Report of MHI | May 3, 2006 |
| MHI-4SV-05 | Source Verification Report of MHI/Japan Steel Work | May 4, 2005 |
| MHI-4SV-06 | Source Verification Report of MHI/Japan Steel Work | May 23, 2006 |
| MHI-5SV-05 | Source Verification Report of MHI/Japan Steel Work | June 10, 2005 |
| MHI-5SV-06 | Source Verification Report of MHI | September 26, 2006 |
| MHI-6SV-05 | Source Verification Report of MHI | July 1, 2005 |
| MHI-6SV-06 | Source Verification Report of MHI | January 24, 2007 |
| MHI-7SV-05 | Source Verification Report of MHI/Japan Steel Work | August 12, 2005 |
| MHI-7SV-06 | Source Verification Report of MHI | January 16, 2007 |
| MHI-8SV-05 | Source Verification Report of MHI | March 26, 2007 |
| MHI-8SV-06 | Source Verification Report of MHI | Date? |
| MHI-9SV-05 | Source Verification Report of MHI/Japan Steel Work | October 13, 2005 |
| MHI-10SV-05 | Source Evaluation Report of MHI | February 8, 2006 |
| MHI-11SV-05 | Source Verification Report of MHI/Japan Steel Work | December 21, 2005 |
| SO123-XII-18.19 | Nuclear Oversight Procedure Supplier Audits | 10 |
| SO123-XII-7.12 | Nuclear Oversight Procedure Source Verification | 5 |

CALCULATIONS

| Number | Title | Revision |
|---|---|---|
| SO23-617-1-C275 | Design Report of the Channel Head Region | 6 |
| SO23-617-1-C514 | Design for RCS Flow Rate | 1 |
| SO23-617-1-M1562 | Retainer Bar Tube Wear Report | 0 |

CORRECTIVE ACTION REPORTS

| | | | | |
|---|---|---|---|---|
| | | | | |

DESIGN BASIS DOCUMENTS

| Number | Title | Revision |
|---|---|---|
| SO23-617-01 | Specification for Design and Fabrication of RSGs for Unit 2 and Unit 3 | 4 |
| SO23-617-1-M1492 | As-Built Reconciliation Report for Unit 3 | 2 |
| L5-04GA428 | Design of Anti-Vibration Bar | 5 |
| DBD-SO23-365 | Design Basis for Steam Generator and Secondary Side | 10 |

DESIGN CHANGE NOTIFICATIONS/SUPPLIER DEVIATION REQUESTS

| Number | Title | Revision |
|---|---|---|
| NECP 800071703 | Engineering Change Package, "Replacement Steam Generators" | 0 |
| SDR-007 43366-05007 | Circulation Ratio for RSG | 0 |
| SDR-037 43366-06037 | Tube-to-Tube Clearance in 2A RSG | 0 |
| SDR-047 43366-07047 | Tool Mark in 3A Tubesheet | 0 |
| SDR-050 43366-07050 | Tool Mark in 3B Tubesheet | 0 |

| Number | Title | Revision |
|---|---|---|
| SDR-051 43366-07051 | Unit 2A Lower Shell Assembly | 0 |
| SDR-053 43366-07053 | Unit 2B Lower Shell Assembly | 0 |
| SDR-059 43366-08059 | Unit 3B Lower Shell Assembly | 0 |
| SDR-064 43366-08064 | Axial Length of AVB | 0 |
| SDR-079 43366-08079 | Statistical Size of Tube-to-AVB Gap | 0 |
| SDR-082 43366-09082 | Divider Plate Repair of Unit 3 RSGs | 0 |
| SDR-086 10041870-09086 | Specifications for Unit 3 RSG Tube Material | 0 |
| SDR-098 10041870-10098 | Overall Height of 3A RSG | 0 |
| SDR-099 10041870-10099 | Perpendicularity and Parallelism of 3A RSG Key Bracket | 0 |
| SDR-100 10041870-10100 | Parallelism of 3B RSG Key Bracket | 0 |

DRAWINGS

| Number | Title | Revision |
|---|---|---|
| SO23-617-1-D103 | Design Drawing – Component and Outline Drawing 1 / 3 | 5 |
| SO23-617-1-D104 | Design Drawing – Component and Outline Drawing 1 / 3 | 2 |
| SO23-617-1-D106 | Design Drawing Tubesheet and Extension Ring 1 of 3 | 12 |
| SO23-617-1-D107 | Design Drawing Tubesheet and Extension Ring 2 of 3 | 5 |
| SO23-617-1-D108 | Design Drawing Tubesheet and Extension Ring 3 of 3 | 8 |
| | | |
| SO23-617-1-D109 | Design Drawing Lower Shell, Middle Shell, Transition Cone and Upper Shell Stub 1 of 4 | 5 |
| SO23-617-1-D110 | Design Drawing Lower Shell, Middle Shell, Transition Cone and Upper Shell Stub 2 of 4 | 7 |

| Number | Title | Revision |
|---|---|---|
| SO23-617-1-D111 | Design Drawing Lower Shell, Middle Shell, Transition Cone and Upper Shell Stub 3 of 4 | 4 |
| SO23-617-1-D112 | Design Drawing Lower Shell, Middle Shell, Transition Cone and Upper Shell Stub 4 of 4 | 4 |
| SO23-617-1-D113 | Design Drawing Channel Head 1 of 4 | 9 |
| SO23-617-1-D113 | Design Drawing Channel Head 1 of 4 | 15 |
| SO23-617-1-D114 | Design Drawing Channel Head 2 of 4 | 13 |
| SO23-617-1-D115 | Design Drawing Channel Head 3 of 4 | 5 |
| SO23-617-1-D116 | Design Drawing Tube Bundle 1 of 3 | 1 |
| SO23-617-1-D117 | Design Drawing Tube Bundle 2 of 3 | 1 |
| SO23-617-1-D118 | Design Drawing Tube Bundle 3 of 3 | 3 |
| SO23-617-1-D159 | Design Drawing Upper Shell, Upper Head Ring and Upper Head Top 1 of 4 | 7 |
| SO23-617-1-D160 | Design Drawing Upper Shell, Upper Head Ring and Upper Head Top 2 of 4 | 2 |
| SO23-617-1-D161 | Design Drawing Upper Shell, Upper Head Ring and Upper Head Top 3 of 4 | 4 |
| SO23-617-1-D162 | Design Drawing Upper Shell, Upper Head Ring and Upper Head Top 4 of 4 | 2 |
| SO23-617-1-D210 | Design Drawing of Moisture Separator Assembly 1 of 6 | 10 |
| SO23-617-1-D211 | Design Drawing of Moisture Separator Assembly 2 of 6 | 10 |
| SO23-617-1-D212 | Design Drawing of Moisture Separator Assembly 3 of 6 | 5 |
| SO23-617-1-D274 | Design Drawing Channel Head 4 of 4 | 4 |
| SO23-617-1-D294 | Design Drawing Tube Support Plate Assembly 1 of 3 | 3 |
| SO23-617-1-D295 | Design Drawing Tube Support Plate Assembly 2 of 3 | 4 |
| SO23-617-1-D296 | Design Drawing Tube Support Plate Assembly 3 of 3 | 5 |
| SO23-617-1-D383 | Design Drawing – Critical Field Interface Dimensions and Major Tolerances 1 / 3 | 7 |
| SO23-617-1-D391 | Design Drawing Wrapper Assembly 1 of 5 | 5 |
| SO23-617-1-D392 | Design Drawing Wrapper Assembly 2 of 5 | 0 |

| Number | Title | Revision |
|---|---|---|
| SO23-617-1-D393 | Design Drawing Wrapper Assembly 3 of 5 | 2 |
| SO23-617-1-D394 | Design Drawing Wrapper Assembly 4 of 5 | 2 |
| SO23-617-1-D395 | Design Drawing Wrapper Assembly 5 of 5 | 3 |
| SO23-617-1-D494 | Design Drawing – Divider Plate1 / 2 | 10 |
| SO23-617-1-D495 | Design Drawing – Divider Plate 2 / 2 | 6 |
| SO23-617-1-D507 | Design Drawing Anti-Vibration Bar Assembly 1 of 9 | 4 |
| SO23-617-1-D508 | Design Drawing Anti-Vibration Bar Assembly 2 of 9 | 2 |
| SO23-617-1-D509 | Design Drawing Anti-Vibration Bar Assembly 3 of 9 | 0 |
| SO23-617-1-D539 | Design Drawing Anti-Vibration Bar Assembly 4 of 9 | 0 |
| SO23-617-1-D540 | Design Drawing Anti-Vibration Bar Assembly 5 of 9 | 2 |
| SO23-617-1-D541 | Design Drawing Anti-Vibration Bar Assembly 6 of 9 | 2 |
| SO23-617-1-D542 | Design Drawing Anti-Vibration Bar Assembly 7 of 9 | 8 |
| SO23-617-1-D543 | Design Drawing Anti-Vibration Bar Assembly 8 of 9 | 3 |
| SO23-617-1-D544 | Design Drawing Anti-Vibration Bar Assembly 9 of 9 | 1 |
| SO23-617-1-D680 | Design Drawing – Tubing Expansion and Seal Welding | 3 |
| SO23-617-1-D1099 | Fabrication Drawing – General Shipping Arrangement [SON 2E89; SON 2E882E0-88] | 2 |
| SO23-617-1-D1100 | Fabrication Drawing – General Shipping Arrangement [SON 3E89; SON 3E88] | 2 |
| SO23-617-1-D1488 | Fabrication Drawing – Temporary Attachment For Channel Head and Tubesheet Welding (Unit 3) | 0 |
| L5-04FW111 | Detail of AVB 1 of 5 (Center Narrow AVB) | 6 |
| L5-04FW112 | Detail of AVB 2 of 5 (Center Wide AVB) | 2 |
| L5-04FW113 | Detail of AVB 3 of 5 (Side Narrow AVB) | 2 |
| L5-04FW114 | Detail of AVB 4 of 5 (Side Wide AVB for Hot Side) | 2 |
| L5-04FW115 | Detail of AVB 5 of 5 (Side Wide AVB for Cold Side) | 2 |

ENGINEERING REPORTS (ER)

| Number | Title | Revision |
|---|---|---|
| SO23-617-1-M1401 | Divider Plate Weld Joint Separation Root Cause Evaluation Report | 4 |
| SO23-617-1-C157 | Evaluation of Tube Vibration | 3 |
| SO23-617-1-C749 | Analytical Report of AVB Assembly | 4 |
| SO23-617-1-M1265 | Summary Design Report | 8 |
| SO23-617-1-M1231 | Performance Analysis Report | 3 |
| SO23-617-1-C682 | Analytical Report of Separator and Dryer Assemblies | 7 |
| SO23-617-01R3 | Design Report of Tube | 5 |

MHI DOCUMENTS

| Number | Title | Revision/Date |
|---|---|---|
| UHQ-08N013 | MHI Survey Report of Sumitomo Metal Industries, Limited. Steel Tube Works | 0 |
| UHQ-11N010 | MHI Survey Report of Sumitomo Metal Industries, Limited. Steel Tube Works | 0 |
| UHQ-05N015 | MHI Survey Report of Sumitomo Metal Industries, Limited. Pipe & Tube Works | 1 |
| UHQ-08N014 | MHI Survey Report of Sumitomo Metal Industries, Limited. Steel Tube Works | 0 |
| UHQ-11S005 | MHI Survey Report of Sumitomo Metal Industries, Limited. Steel Tube Works | 0 |
| UHQ-05N019 | MHI Survey Report of Sumitomo Metal Industries, Limited. Steel Tube Works | 0 |
| BUH94-06 | Quality Assurance Survey/Audit Procedure of Vendors | 6 |
| BUH94-06 | Vendor Evaluation Procedure | 9 |
| BUH94-06 | Vendor Evaluation Procedure | 13 |
| 5ZDD94-06 | Vendor Evaluation Procedure | 1 |

| Number | Title | Revision/Date |
|---|---|---|
| UHQ-08N013 | MHI Survey Report of Sumitomo Metal Industries, Limited. Steel Tube Works | 0 |
| UHW-68-06A002 | MHI Evaluation on Corrective Action Established by Sumitomo Metal Industries Limited | 0 |
| UHNR-SON-RSG-06N005 | Nonconformance Report for Alloy 690 SG Tubing for SONGS Unit 2 | 4 |
| UHQ-07N004 | MHI Audit Report of Sumitomo Metal Industries, Limited. Steel Tube Woks | 1 |
| UHCP-70N004 | Corrective Action Plan Followup Report | 0 |
| UES-20100006 | Qualified Vendor List | 18 |
| L5-04GB004 | Submittal Document Control List | 53 |
| UGNR-SON2-RSG-020 | Nonconformance Report Channel head for Unit 2A | February 2, 2006 |
| UGNR-SON2-RSG-038 | Nonconformance Report Unacceptable local diameter change of tube holes | June 2, 2006 |
| UGNR-SON2-RSG-052 | Nonconformance Report Unacceptable length of 10 tube hole pitch of tube support plate #3 | September 11, 2006 |
| UGNR-SON2-RSG-062 | Nonconformance Report Incorrect end caps of AVB 2ASN154C and AVB 2ASN164C | December 1, 2006 |
| UGNR-SON2-RSG-075 | Nonconformance Report Unacceptable gaps between tubes and AVBs | March 24, 2007 |
| UGNR-SON2-RSG-091 | Nonconformance Report Incorrect machining for steam flow limiting device | September 4, 2007 |
| UGNR-SON2-RSG-096 | Nonconformance Report Unacceptable dimensions for steam flow limiting device of Unit 2A | October 23, 2007 |
| UGNR-SON3-RSG-009 | Nonconformance Report Unacceptable local diameter change of tube holes | May 10, 2007 |
| UGNR-SON3-RSG-024 | Nonconformance Report Some gaps between tubes and AVBs are larger than the criterion | November 30, 2007 |

| Number | Title | Revision/Date |
|---|---|---|
| UHQ-08N013 | MHI Survey Report of Sumitomo Metal Industries, Limited. Steel Tube Works | 0 |
| UGNR-SON3-RSG-049 | Nonconformance Report Out of tolerance on hand holes inside diameter | March 2, 2009 |
| UGNR-SON3-RSG-055 | Nonconformance Report Divider plate metal repair butter/weld crack after post bake | September 11, 2009 |
| UGNR-SON-RSG-06N002 | Nonconformance Report Feedwater nozzle for unit 2 ID: 21721-101 | February 2, 2006 |
| ~~UGS-L5-050043~~ | ~~Anti-Vibration Bar Inspection Procedure (Individual Bar)~~ | ~~1~~ |
| ~~UGS-L5-050045~~ | ~~Inspection Procedure for Tube and Anti-Vibration Bar Inspection~~ | ~~10~~ |
| B91U-N0001 | Mitsubishi Heavy Industries Ltd Kobe Shipyard & Machinery Works Quality Assurance Manual (Nuclear) | 39 |
| UES-69-040038 | Mitsubishi Heavy Industries Ltd Kobe Shipyard & Machinery Works Quality Assurance Program Manual (Project Addenda) | 15 |
| UHH-G06A97 | Stop Work Order for FMA (Final Mill Annealing) on Manufacturing of Heat Transfer Tubing for SONGS RSG | 0 |

MISCELLANEOUS DOCUMENTS

| ~~Number~~ | ~~Title~~ | ~~Revision/Date~~ |
|---|---|---|
| AR 060500134 | Action Request: Qualification Letter | |
| AR 040901345 | Action Request: Qualification Letter | |
| AR 050301458 | Action Request: Qualification Letter | |
| | Setpoint Transmittal Unit 2 and 3 Gas Monitors | December 6, 2010 |
| | SONGS Unit 3 Chemistry/Operations Logs – SG Event Timeline | January 31, 2012 |
| | Radiation Monitor 3RT-7870 Setpoints | May 31, 2011 |
| | Radiation Monitor 3RT-7818A Setpoints | May 31, 2011 |

| ~~Number~~ | ~~Title~~ | ~~Revision/Date~~ |
|---|---|---|
| 2G-030-3 | Condenser Air Ejector Continuous Gas Post-Release Report | January 31, 2012 |
| SO23-617-01 | Specification for Design and Fabrication of RSGs for Unit 2 and Unit 3 | 4 |
| SO23-617-02 | Specification for Baseline Pre-Service Examination (PSE) on Tubing for Replacement Steam Generators | 1 |
| | Updated Final Safety Analysis Report for San Onofre Units 2 and 3 | April 2009 |
| SO23-617-1-M29 | Design Review Item List | 9 |
| DA 2002-92 | Dominion Audit of Mitsubishi Heavy Industries | June 9, 2002 |
| V03-008 | Omaha Public Power District Audit of Mitsubishi Heavy Industries | July 18, 2003 |
| 99901030/2008-201 | Mitsubishi Heavy Industries (MHI), Kobe, Japan, inspection of selected portions of MHI's Quality Assurance (QA) program, and 10 CFR Part 21 program | July 18, 2008 |
| 99901384/2009-201 | Sumitomo Metal Industries, Limited, Higashi-Mukojima Amagasaki, Japan, inspection of selected portions of Sumitomo's quality assurance (QA) program and 10 CFR Part 21 program | November 13, 2009 |
| SMI-AQA-9041 | Reply to Notice of Nonconformance(99901 384/2009-201-01) | 0 |
| ~~NRC Inspection Report 99901030/2008-201~~ | ~~Inspection of Selected Portions of MHI's Quality Assurance and 10 CFR Part 21 Programs~~ | ~~July 18, 2008~~ |

MODIFICATIONS

| Number | Title | Date |
|---|---|---|
| Engineering Change Package NECP 800071702 | 50.59 Screening and Evaluation for Replacement Steam Generators – Unit 2 | July 31, 2009 |

| | | |
|---|---|---|
| Engineering Change Package NECP 800071703 | 50.59 Screening and Evaluation for Replacement Steam Generators – Unit 3 | July 31, 2009 |

NUCLEAR NOTIFICATIONS

| | | | | |
|---|---|---|---|---|
| 201907899 | | | | |

*NN's issued as a result of inspection activities.

PROCEDURES

| Number | Title | Revision |
|---|---|---|
| SO123-ODCM | Offsite Dose Calculation Manual | 0 |
| SO123-0-47 | Notification and Reporting of Significant Events | 18 |
| SO123-III-5.9 | Manual Effluent Gaseous Release Permits, Setpoint Calculations, and Monitor Calibration Constant Evaluations | 8 |
| SO123-VIII-1 | EPIP: Recognition and Classification of Emergencies | 36 |
| SD-SO23-310 | System Description - Turbine Building Sampling System | 9 |
| SD-SO23-690 | System Description – Steam Generator E088/089 | 18 |
| SD-SO23-690 | System Description – Steam Generator Radiation Monitors RE-6753 & RE-6759 | 18 |
| SD-SO23-690 | System Description – Condenser Air Ejector Wide Range Radiation Monitors RE-7870A/B & Low Range Radiation Monitors RE-7818 | 18 |
| SB-SO-FB-006 | Divider Plate Weld Joint Repair Procedure | 10 |
| SB-SO-HT-1001 | Post Weld Heat Treatment Procedure | 22 |
| SO123-XXXII-2.27 | Supplier Deviation Requests (SDRs) | 5 |
| SO23-617-1-D104 | Design Drawing - Component and Outline Drawing 2/3 | 2 |
| SO23-617-1-D1099 | General Shipment Arrangement SON-2A | 4 |
| SO23-617-1-M1246 | Hydrostatic Test Procedure | 3 |
| SO23-617-1-M139 | Post Weld Heat Treatment Procedure | 21 |

| | | |
|---|---|---|
| SO23-617-1-M1395 | Divider Plate Weld Joint Procedure | 9 |
| SO23-617-1-M1398 | Divider Plate Weld Joint Repair Plan | 12 |
| SO23-617-1-M1461 | Additional Post Weld Heat Treatment Procedure for Divider Plate Weld Joint Repair | 0 |
| SO23-617-1-M616 | Tubesheet Drilling Procedure | 9 |
| SO23-617-1-M733 | Helium Leak Test Procedure of the Tube to Tubesheet Welds (High Pressure) | 5 |
| SO23-617-1-M735 | Helium Leak Test Procedure of the Tube to Tubesheet Welds (Low Pressure) | 3 |
| SO23-617-1-M819 | AVB Structure Assembly Procedure | 8 |
| SO23-617-1-M820 | Tubing and AVB Installation Procedure | 6 |
| SO23-617-1-M821 | Anti-Vibration Bar Inspection Procedure (After Assembly) | 5 |
| ~~SO123-XV-50~~ | ~~Corrective Action Program~~ | ~~25~~ |
| ~~SO123-XII-18.19~~UGS-L5-050043 | ~~Nuclear Oversight~~Anti-Vibration Bar Inspection Procedure ~~Supplier Audits~~(Individual Bar) | ~~10~~1 |
| ~~SO123-XII-7.12~~UGS-L5-050045 | ~~Nuclear Oversight~~Inspection Procedure ~~Source Verification~~for Tube and Anti-Vibration Bar Inspection | ~~5~~10 |

VENDOR DOCUMENTS

| Number | Title | Revision/Date |
|---|---|---|
| 51-9176667-001 | Engineering Information Record, "SONGS 2C17 & 3C17 Steam Generator Degradation Assessment" | 1 |
| UGNR-SON2-RSG-012 | DI for Tube Support Plate Material | 1 |

| Number | Title | Revision/Date |
|---|---|---|
| UGNR-SON2-RSG-014 | Discrepancy for tube thickness of TSP between Drawing and Purchase Specification | 0 |
| UGNR-SON2-RSG-015 | Unacceptable Indications by MT for wrapper support of Unit 2 #A | 1 |
| UGNR-SON2-RSG-021 | Unacceptable Indications by MT for Anti rotation support of Unit 2 #A | 0 |
| UGNR-SON2-RSG-027 | Unacceptable MT indication for Anti-Rotation Supports | 0 |
| UGNR-SON2-RSG-054 | Unacceptable length of 10 tube hole pitch of tube support Plate # 6 | 1 |
| UGNR-SON2-RSG-058 | Insufficient clearance between the tubes in Row No. 28 and 30 in Column No. 22 | 3 |
| UGNR-SON2-RSG-059 | Insufficient clearance between the tubes in Row No 92 and 94 in Column No. 34 | 0 |
| UGNR-SON2-RSG-067 | Unacceptable Gaps between Tubes and AVBs | 7 |
| UGNR-SON2-RSG-075 | Unacceptable gaps between Tubes and AVBs | 1 |
| UGNR-SON2-RSG-091 | Incorrect Machining for Steam Flow Limiting Device | 0 |
| UGNR-SON2-RSG-103 | Damaged Locking Plates of Vane Jacking Device | 9 |
| UGNR-SON2-RSG-109 | As built dimension of #2A RSG | 1 |
| UGNR-SON2-RSG-112 | As built dimension of #2B RSG | 0 |
| UGNR-SON3-RSG-001 | Tubesheet | 0 |
| UGNR-SON3-RSG-018 | Unacceptable local diameter change of Tube holes | 2 |
| UGNR-SON3-RSG-024 | Some Gaps between Tubes and AVBs are larger than the criterion | 1 |

| Number | Title | Revision/Date |
|---|---|---|
| UGNR-SON3-RSG-030 | Some gaps between tubes and AVBs are larger than the criterion | 0 |
| UGNR-SON3-RSG-051 | Divider Plate Weld Crack | 16 |
| UGNR-SON3-RSG-052 | Divider Plate Weld Crack | 19 |
| UGNR-SON3-RSG-057 | Extension of Tubesheet PWHT Duration | 1 |
| UGNR-SON3-RSG-059 | Out of Tolerance dimensions on Primary Inlet/Outlet Nozzles and Support Skirt | 1 |
| UGNR-SON3-RSG-062 | Out of tolerance dimensions on Primary Inlet/Outlet Nozzles and Support Skirt (#B RSG) | 1 |
| UGNR-SON3-RSG-067 | UT indications in the Alloy 600/690 butter of Divider Plate Weld Groove | 0 |
| UGNR-SON3-RSG-074 | As built dimensions of #3A RSG (Overall Height) | 0 |
| UGNR-SON3-RSG-075 | As built dimension of #3A RSG | 1 |
| UGNR-SON3-RSG-076 | As built dimension of #3B RSG | 0 |
| UHNR-SON3-RSG-07N001 | Divider Plates for Unit 3 | 0 |
| Heat Treatment Record 40010SG-B-900D-R1-68 | Heat Treatment Chart for SG3 | April 4, 2012 |
| SO23-617-1-M149 | Purchase Specification for Heat Transfer Tubing | 4 |
| Fabrication Process Sheet 3901-SG-A-400E (Order 2563901/G101) | Rework of AVB Insertion for SONGS Unit 2 Replacement Steam Generator #A – Lower Portion | 1 |

| Number | Title | Revision/Date |
|---|---|---|
| | | |
| Fabrication Process Sheet 3901-SG-A-400D (Order 2563901/2300) | Helium Leak Test for SONGS Unit 2 Replacement Steam Generator #A – Lower Portion | 0 |
| TSN-5050 | Control Document Status list For Alloy 690 SG Tubing | 2 |
| TSN-5051 | Program of Preproduction Qualification (PPQ) For Alloy 690 SG Tubing | 3 |
| TSN-5053 | Melting Procedure for Alloy 690 SG Tubing | 0 |
| TSN-5054 | Identification and Traceability Procedure for Alloy 690 SG Tubing | 2 |
| TSN-5055 | Prohibited and Detrimental Material Control Procedure for Alloy 690 SG Tubing | 0 |
| TSN-5072 | Sampling Test Specimen Procedure for Alloy 690 SG Tubing | 2 |
| TSN-5073 | Chemical Analysis Procedure for Alloy 690 SG Tubing | 1 |
| TSN-5074 | Inclusion Test Procedure for Alloy 690 SG Tubing | June 4, 2005 |
| 005F-No.4316 | PPQ Test Results of Alloy 690 SG Tubing for San Onofre Nuclear Generating station Unit 2&3 | 2 |
| 4009-3ir01 | Moody International Ltd Inspection Report of Sumitomo Metal Industries | September 29, 2005 |

## SEQUENCE OF EVENTS

### San Onofre Nuclear Generating Station, Unit 2 and 3 Steam Generators

| Date | Event Description |
|---|---|
| November 2001 | Licensee forms a team to study the viability of replacing the steam generators |
| May 7, 2002 | Vendor benchmarking commences |
| July 2002 | Bechtel replacement study complete |
| November 7, 2003 | Replacement steam generator specification complete |
| December 12, 2003 | Replacement steam generator specification sent to procurement office |
| December 21, 2003 | Replacement steam generator request for proposal issued |
| February 17, 2004 | Bechtel installation study report completed |
| February 27, 2004 | Steam generator replacement request filed with California Public Utility Commission |
| February 27, 2004 | Replacement steam generator bids received by SCE |
| July 28, 2004 | Replacement steam generator vendor selected |
| August 2, 2004 | Replacement steam generator bid evaluation review board start |
| September 13, 2004 | Replacement steam generator bid evaluation completed |
| September 16, 2004 | SCE Board of Directors approval for Mitsubishi to design and manufacture steam generators |
| September 30, 2004 | Replacement steam generator contract signed |
| September 30, 2004 | Fabrication of Unit 2 and Unit 3 steam generators commences at Mitsubishi |
| November 2004 | SCE performs first full quality assurance audit of Mitsubishi |
| March 2, 2005 | Replacement steam generator installation specification sent to procurement office |
| March 17, 2005 | Mitsubishi/SCE anti-vibration bar design discussion |
| March 2005 | SCE performs follow-up surveillance audit of Mitsubishi |
| March 23, 2005 | SCE places conditional qualification on Mitsubishi |

| | |
|---|---|
| September 21, 2005 | Final environmental impact report released to public |
| October 2005 | SCE performs follow-up quality assurance audit of Mitsubishi |
| December 15, 2005 | California Public Utility Commission approval received |
| December 15, 2005 | Installation contract signed with Bechtel |
| February 2006 | SCE performs follow-up quality assurance audit of Mitsubishi |
| March 10, 2006 | Edison International Company Board of Directors approval of steam generator replacement project |
| April 22, 2006 | SONGS Unit 2 refueling outage completed |
| May 1, 2006 | Replacement steam generator transportation specification issued |
| May 10, 2006 | SCE removes conditional qualification from Mitsubishi |
| September 27, 2006 | Sumitomo Metal Industries issues a non-conformance report on some tubing for non-conformance to specifications associated with the final mill annealing process |
| September 27, 2006 | Mitsubishi issues stop work order to Sumitomo |
| September 28, 2006 | Mitsubishi issues corrective action request to Sumitomo based on the final mill annealing non-conformance report |
| September 29, 2006 | Mitsubishi visits Sumitomo to conduct root cause investigation |
| October 3, 2006 | Mitsubishi visits Sumitomo to confirm the adequacy of the corrective actions taken to address the root cause findings from the September 29, 2006 meeting |
| October 3, 2006 | Mitsubishi releases stop work order after confirming adequacy of Sumitomo's corrective actions |
| November 10, 2006 | Non-conformance report associated with final mill annealing process is closed |
| March 12, 2007 | Corrective action request associated with the final mill annealing non-conformance report closed |
| May 8, 2007 | Mitsubishi performs followup audit at Sumitomo and issues corrective action request for two findings in the audit |
| July 17, 2007 | Sumitomo submits corrective actions taken for the findings of the May 8, 2007 audit; Mitsubishi closes corrective action request. |
| September 13, 2006 | Mitsubishi/SCE technical meeting regarding anti-vibration bars |

| | |
|---|---|
| April 2008 | Fabrication of Unit 2 steam generators complete |
| April – June 2008 | Mitsubishi performs primary and secondary side hydrostatic pressure tests of Unit 2 steam generators |
| July 4, 2008 | AREVA performs baseline pre-service eddy current examinations on steam generator 2E0-89 at Mitsubishi facilities in Kobe, Japan |
| July 18, 2008 | AREVA performs baseline pre-service eddy current examinations on steam generator 2E0-88 at Mitsubishi facilities in Kobe, Japan |
| ~~July 18, 2008~~ | ~~NRC Inspection Report 99901030/2008-201 was issued. An inspection was completed at the Mitsubishi facility in Kobe, Japan. No violation or non-conformances were identified~~ |
| September and October 2008 | Final inspection for Unit 2 steam generators is completed. Primary and secondary sides filled with nitrogen. |
| December 16, 2008 | Unit 2 steam generators shipped from Kobe, Japan |
| February 14, 2009 | Unit 2 steam generators arrive at SONGS |
| Early March 2009 | Fabrication of Unit 3 steam generators complete |
| Middle March 2009 | Primary and secondary hydrostatic pressure tests conducted on Unit 3 steam generators |
| March 18, 2009 | Unit 3 divider plate weld failure discovered |
| March – July 2009 | Root cause evaluation of the divider plate-to-tubesheet weld conducted by Mitsubishi |
| March – June 2009 | Repair procedures developed for Unit 3 steam generators |
| June 2009 | Repair work on Unit 3 steam generators commences |
| July 2009 | AREVA performs final pre-service eddy current examinations on Unit 2 steam generators at SONGS |
| September 2009 – April 2010 | Unit 2 performs a refueling outage and installs the replacement steam generators |
| March 29, 2010 | Repair work to Unit 3 steam generator 3E0-89 complete |
| April 5, 2010 | Repair work to Unit 3 steam generator 3E0-88 complete |
| April 2010 | Unit 2 recommences power operations |
| April 18, 2010 | Unit 3 steam generator 3E0-89 passes primary side hydrostatic pressure retest |

| | |
|---|---|
| April 24, 2010 | Unit 3 steam generator 3E0-88 passes primary side hydrostatic pressure retest |
| June 2010 | AREVA performs baseline pre-service eddy current examinations on Unit 3 steam generators at Mitsubishi facilities in Kobe, Japan |
| August 2, 2010 | Unit 3 steam generators shipped |
| October 4, 2010 | Unit 3 steam generators arrive at SONGS |
| October 2010 – February 2011 | Unit 3 performs a refueling outage and installs the replacement steam generators |
| February 2011 | Unit 3 recommences power operations |
| January 10, 2012 | Unit 2 refueling outage start |
| January 31, 2012 | Unit 3 tube leak; rapid shutdown commences |
| February 2, 2012 | Unit 3 reaches cold shutdown conditions |
| February 12, 2012 | Unit 3 eddy current inspections commence on both steam generators |
| March 13, 2012 | In-situ pressure testing commences on tubes in steam generator 3E0-88 of Unit 3 |
| March 14, 2012 | In-situ pressure test failures on tubes located in Row 106 Column 78, Row 102 Column 78, and Row 104 Column 78 of steam generator 3E0-88 |
| March 15, 2012 | In-situ pressure test failures on tubes located in Row 100 Column 80, Row 107 Column 77, Row 101 Column 81, and Row 98 Column 80 of steam generator 3E0-88 |
| March 16, 2012 | In-situ pressure test failure on tube located in Row 99 Column 81 of steam generator 3E0-88 |
| March 16 – 21, 2012 | The 65 remaining tubes in steam generator 3E0-88 pass in-situ pressure testing |
| March 15 – 21, 2012 | The 56 identified tubes in steam generator 3E0-89 of Unit 3 are in-situ pressure tested and all tubes passed. |
| March 19 – 29, 2012 | NRC Augmented Inspection Team performs inspections at SONGS |
| March 23, 2012 | NRC received a letter from SCE outlining their commitments for corrective actions prior to restart of both Unit 2 and Unit 3 |

| | | |
|---|---|---|
| March 27, 2012 | NRC issues a Confirmatory Action Letter to SCE | Form |
| June 18, 2012 | NRC conducts public Augmented Inspection Team exit meeting near SONGS | Form |

| Page 1: [1] Formatted | gew | 8/1/2012 12:45:00 PM |
|---|---|---|

Font: +Body

| Page 1: [2] Change | Comparison |
|---|---|

Field Code Changed

| Page 1: [3] Formatted | gew | 8/1/2012 12:45:00 PM |
|---|---|---|

Font: +Body, 10 pt

| Page 1: [3] Formatted | gew | 8/1/2012 12:45:00 PM |
|---|---|---|

Font: +Body, 10 pt

| Page 1: [4] Change | Unknown |
|---|---|

Field Code Changed

| Page 1: [5] Change | Comparison |
|---|---|

Field Code Changed

| Page 1: [6] Formatted | gew | 8/1/2012 12:45:00 PM |
|---|---|---|

Font: +Body, 10 pt, Bold

| Page 1: [7] Change | Unknown |
|---|---|

Field Code Changed

| Page 1: [8] Formatted | gew | 8/1/2012 12:45:00 PM |
|---|---|---|

Font: +Body, 10 pt, Bold

| Page 1: [9] Formatted | gew | 8/1/2012 12:45:00 PM |
|---|---|---|

TOC 2

| Page 1: [10] Change | Comparison |
|---|---|

Field Code Changed

| Page 1: [11] Formatted | gew | 8/1/2012 12:45:00 PM |
|---|---|---|

Font: 10 pt

| Page 1: [11] Formatted | gew | 8/1/2012 12:45:00 PM |
|---|---|---|

Font: 10 pt

| Page 1: [11] Formatted | gew | 8/1/2012 12:45:00 PM |
|---|---|---|

Font: 10 pt

| Page 1: [12] Change | Unknown |
|---|---|

Field Code Changed

UNITED STATES
NUCLEAR REGULATORY COMMISSION
REGION IV
1600 EAST LAMAR BLVD
ARLINGTON, TEXAS 76011-4511

~~July 18, 2012~~

Mr. Peter Dietrich
Senior Vice President and
Chief Nuclear Officer
Southern California Edison Company
San Onofre Nuclear Generating Station
P.O. Box 128
San Clemente, CA 92674-0128

SUBJECT: SAN ONOFRE NUCLEAR GENERATING STATION – NRC AUGMENTED INSPECTION TEAM REPORT ~~05000361/2012007 and~~ 05000362/2012007

Dear Mr. Dietrich:

The U. S. Nuclear Regulatory Commission (NRC) completed an inspection at your San Onofre Nuclear Generating Station (SONGS). The enclosed report documents the inspection results, which were discussed with you and other members of your staff during a public exit meeting on June 18, 2012.

~~The Augmented Inspection Team (AIT) was established to review the causes, safety implications, and your staff's actions following an event that occurred on January 31, 2012, involving a reactor coolant leak identified in a Unit 3 steam generator and a subsequent identification that multiple steam generator tubes in Unit 3 had experience substantial and unusual wear, eight of which failed pressure testing. The SONGS Unit 3 steam generators were new and had been in operation for less than one operating cycle. At the time of the event, SONGS Unit 2 was shutdown in a refueling outage with steam generators that had been in service for one operating cycle.~~

Unit 3 had been operating for approximately one year following replacement of the steam generators when on January 31, 2012, control room operators received alarms, that indicated reactor coolant was leaking into steam generator 3E0-88. The leak was unexpected, and the control room operators responded in accordance with their procedures to perform a rapid shutdown, since the leak, although small, had increased enough in a short period of time to warrant the precautionary shutdown. The estimated leak rate was 75 gallons per day. The facility license allows full power operation with a steady leak rate of less than 150 gallons per day.

The first indication of the leak was from the main condenser air ejector radiation monitors reaching their alarm set point. The radiation monitors continuously sample from a vent stack for the purpose of rapidly identifying steam generator tube leaks. This was a direct release of

radioactivity to the atmosphere, which is allowed by the facility license, up to limits in the regulations. The licensee reviewed the amount of gaseous radioactivity released and estimated a dose of approximately 0.0000452 mrem to a member of the public. The annual regulatory limit to a member of the public is 100 mrem per year. During a radiation protection inspection the week of February 13, 2012, the team reviewed the licensee dose estimates and did not identify any issues.

Unit 3 control room operators performed a controlled shutdown of Unit 3 on January 31, 2012, and reached cold shutdown conditions on February 2, 2012. The operators then prepared the steam generators for tube inspections, which were started on February 12, 2012. The first inspection confirmed the location of the leak in steam generator 3E0-88. One tube was found with a small leak and no other tubes were leaking.

The licensee completed an extensive and expanded eddy current inspection of 100 percent of the steam generator tubes in both Unit 3 steam generators. Following pre-established testing requirements, the licensee identified 129 tubes in Unit 3 (56 tubes in steam generator 3E0-89 and 73 tubes in steam generator 3E0-88) that required in-situ pressure testing. This testing began on March 13, 2012, and was performed under ambient conditions.

Of the 129 tubes tested, a total of 8 tubes failed in-situ pressure testing which included the original tube that was leaking. All of the failed tubes occurred in steam generator 3E0-88. Three of the tubes failed at or below a test pressure (3200 psi) equivalent to a design basis main steam line break differential pressure and temperature. The remaining five tubes failed near, but below the maximum differential test pressure of 5250 psig. This test pressure was equivalent to the minimum burst pressure capacity required by the plant technical specifications.

In accordance with Management Directive 8.3, "NRC Incident Investigation Program," deterministic and conditional risk criteria were used to evaluate the level of NRC response for this operational event. This event met three deterministic criteria (involved a major deficiency in design having potential generic safety implications; led to a significant loss of integrity of the primary coolant pressure boundary; and, involved an emergency or non-emergency event or situation, related to the health and safety of the public or on-site personnel or protection of the environment, for which a 10 CFR 50.72 report has been submitted that is expected to cause significant, heightened public or government concern) and the conditional large early release probability for the event was estimated to be in the overlap range for a special inspection/augmented inspection. Based on deterministic criteria being met and the risk assessment of this condition, Region IV, in consultation with the Office of Nuclear Reactor Regulation and Office of Nuclear Security and Incident Response, concluded that the NRC response should be an augmented team inspection.

This augmented inspection was chartered, in part, to ~~review~~identify the circumstances surrounding the tube degradation; review the licensee's actions following discovery of the conditions; evaluate the licensee's ~~determination~~review of ~~the~~potential causes of the unusual steam generator tube wear; review the steam generator modeling; and, assess the differences between Unit 2 and Unit 3 steam generators. ~~The charter is available in ADAMS at ML12075A258. It is not the responsibility of an AIT to determine compliance with the NRC rules~~

~~and regulations or to recommend enforcement actions, this will be done through subsequent NRC inspection or review.~~

~~The~~ Based on inspection, the team concluded that: (1) plant operators responded to the ~~January 31, 2012, steam generator tube leak~~event in accordance with procedures ~~and~~ in a manner that protected public health and safety~~. Plant~~; (2) safety systems ~~worked as expected during the event.~~

~~The NRC team identified ten~~were maintained and responded in accordance with the plant design; and (3) the loss of steam generator tube integrity was a serious safety issue that must be resolved. The purpose of this inspection was to gather facts and identify issues requiring followup, and, as such, no findings were identified. Ten items requiring additional ~~review for regulatory action. These items~~followup are documented as "unresolved" items in the enclosed report. ~~The NRC will conduct subsequent inspections or reviews to determine what, if any, regulatory actions result from the "unresolved" items.~~

~~SONGS Unit 3 steam generators had experienced excessive vibration of tubes in the U-bend region of the steam generators to the extent that the tubes rubbed against each other (tube-to-tube interactions) causing excessive wear and loss of structural integrity. Your staff determined that the vibration was caused by the steam conditions in the U-bend region of the steam generators by a phenomenon called "fluid elastic instability." The NRC inspection team concluded that the steam generators' design and configuration did not provide the necessary margin to prevent this phenomenon.~~

~~Although the steam generator tube degradation from this phenomenon observed in Unit 2 steam generators was not as severe, the NRC team concluded that both units' steam generators were of similar design with similar thermal hydraulic conditions and configurations. Therefore, SONGS Unit 2 steam generators are also susceptible to this phenomenon.~~

~~Accordingly, as documented in NRC Confirmatory Action Letter dated March 27, 2012, (ML12087A323), you are required to submit in writing to NRC for review and acceptance, your actions and plans to prevent recurrence of loss of tube integrity before the resumption of power operations in both SONGS Units 2 and 3.~~

In accordance with 10 CFR 2.390 of the NRC's "Rules of Practice," a copy of this letter, its enclosure, and your response (if any) will be available electronically for public inspection in the NRC Public Document Room or from the Publicly Available Records (PARS) component of the NRC's document system (ADAMS). ADAMS is accessible from the NRC Web site at http://www.nrc.gov/reading-rm/adams.html (the Public Electronic Reading Room).

Sincerely,

~~/RA/~~

Elmo E. Collins
Regional Administrator

Docket No.: ~~50-361, 50-362~~05000362
License No: NPF-~~10, NPF-~~15

Enclosure:
~~1.~~ Inspection Report ~~05000361/2012007 and~~ 05000362/~~20120072~~012-007

w/Attachment~~(s)~~:
~~1.~~ Supplemental Information
~~2. Sequence of Events~~

cc w/ encl: Electronic Distribution

DISTRIBUTION:

(~~Ray.Keller~~Dale.Powers@nrc.gov)

Regional Administrator (Elmo.Collins@nrc.gov)
Deputy Regional Administrator
(Art.Howell@nrc.gov)
DRP Director (Kriss.Kennedy@nrc.gov)
DRP Deputy Director (Allen.Howe@nrc.gov)
DRS Director (Tom.Blount@nrc.gov)
DRS Deputy Director (Patrick.Louden@nrc.gov)
Senior Resident Inspector
(Greg.Warnick@nrc.gov)
Resident Inspector (John.Reynoso@nrc.gov)
SONGS Administrative Assistant
(Heather.Hutchinson@nrc.gov)
Branch Chief, DRS/PSB2
(Greg.Werner@nrc.gov)
Branch Chief, DRP/D (Ryan.Lantz@nrc.gov)
Senior Project Engineer, DRP/D
(Nick.Taylor@nrc.gov)
Project Engineer, DRP/D (David.You@nrc.gov)
Project Engineer, DRP/D (Brian.Parks@nrc.gov)
Public Affairs Officer (Victor.Dricks@nrc.gov)
Public Affairs Officer (Lara.Uselding@nrc.gov)
Branch Chief, DRS/TSB

RITS Coordinator (Marisa.Herrera@nrc.gov)
Regional Counsel (Karla.Fuller@nrc.gov)
Congressional Affairs Officer
(Jenny.Weil@nrc.gov)
OEMail Resource
RIV/ETA: OEDO (Michael.McCoppin@nrc.gov)
DRS/TSB STA (Dale.Powers@nrc.gov)
RSLO (Bill.Maier@nrc.gov)
D/DIR, DORL (Louise.Lund@nrc.gov)
PM (Randy.Hall@nrc.gov)
D: NRR (Eric.Leeds@nrc.gov)
D: NSIR (Jim.Wiggins@nrc.gov)
D: NRO (Glen.Tracy@nrc.gov)
NRR/LPL4 (Michael.Markley@nrc.gov)
NRR/IOEB (Harold.Chernoff@nrc.gov)
~~NRR/DORL (Doug.Broddus@nrc.gov)~~
EDO (Bill.Borchardt@nrc.gov)
DEDR (Michael.Johnson@nrc.gov)
DIR, DORL Michele.Evans@nrc.gov

DOCUMENT NAME: S:DRS\REPORTS\SONGS 2012007 AIT-GEW
~~ADAMS Accession No.:~~ ML12188A748

| SUNSI Rev Compl. | ☑Yes ☐ No | ADAMS | ☑Yes ☐ No | Reviewer Initials | GEW |
|---|---|---|---|---|---|
| Publicly Avail. | ☑Yes ☐ No | Sensitive | ☐Yes ☑ No | Sens. Type Initials | GEW |

| ~~DRS/PSB1~~AIT Member/RIV | AIT Member/~~RIV~~RII | AIT Member/~~RII~~NRO | AIT Member/~~NRO~~NRR | AIT Member/NRR | AIT Member/~~NRR~~RES |
|---|---|---|---|---|---|
| ~~GWerner~~JReynoso | ~~JReynoso~~JRivera-Ortiz | ~~JRivera-Ortiz~~JOrtega-Luciano | ~~JOrtega-Luciano~~EMurphy | ~~EMurphy~~AJohnson | ~~AJohnson~~CThurston |
| ~~GEW /RA/~~ | ~~Per e-mail~~ | ~~Per e-mail~~ | ~~Per e-mail~~ | ~~Per e-mail~~ | ~~Per e-mail~~ |
| ~~07/09/12~~ | ~~07/10/12~~ | ~~07/09/12~~ | ~~07/09/12~~ | ~~07/12/12~~ | ~~07/12/12~~ |
| AIT ~~Member/RES~~ Team Leader/RIV | ~~SRA/RIV~~D:DRS | ~~AIT Team Leader/RIV~~BC/D:DRP | ~~D:DRS~~DRA | RA | ~~RA~~ |
| ~~CThurston~~GWerner | ~~MRunyan~~TBlount | ~~GWerner~~RLantz | ~~TBlount~~AHowell | ECollins | ~~ECollins~~ |
| ~~Per e-mail~~ | ~~Per e-mail~~ | ~~GEW /RA/~~ | ~~TB /RA/~~ | | ~~/RA/~~ |
| ~~07/11/12~~ | ~~07/12/12~~ | ~~07/12/12~~ | ~~07/13/2012~~ | | ~~07/18/2012~~ |

OFFICIAL RECORD COPY

DIR, DIRS Ho.Nieh@nrc.gov
D/DIR, DIRS John.Lubinski@nrc.gov

## EXECUTIVE SUMMARY

On ~~March 19, 2012, an Augmented Inspection Team (AIT) was dispatched to~~January 31, 2012, San Onofre Nuclear Generating Station ~~to gather facts and understand the circumstances surrounding the January 31, 2012~~(SONGS) Unit 3 control room operators received an alarm that indicated a primary~~-~~-to-secondary ~~leak~~ reactor coolant leak from steam generator 3E0-88. Although the leak rate was small, it increased enough in a short period of time for the licensee to perform a rapid shutdown. The estimated leak rate was 75 gallons per day. The facility license allows full power operation with a steady state leak rate of less than 150 gallons per day. On February 2, 2012, Unit 3 reached cold shutdown conditions.

On February 12, 2012, Southern California Edison (SCE) commenced eddy current inspections of 100 percent of the tubes in both Unit 3 steam generators. During these inspections, the licensee discovered unexpected wear in both steam generators, including wear at retainer bars (similar to the wear found in Unit 2 steam generators) and significant tube-to-tube wear in the free-span areas. The inspections identified 56 tubes in steam generator 3E0-89 and ~~failure of eight~~73 tubes in steam generator ~~tubes~~ 3E0-88 that SCE performed in-situ pressure testing on to ~~maintain~~determine if they met the structural integrity ~~as required by~~requirements in plant technical specifications ~~during testing~~.

From March 13 – 21, 2012, AREVA conducted in-situ pressure testing of the suspect tubes in both steam generators. There were a total of eight tube failures during testing, all in steam generator 3E0-88. These tubes failed to satisfy the tube integrity performance criteria. At the time of the augmented team inspection, no stabilization or plugging of tubes had been performed in Unit 3 because the licensee was still conducting a cause evaluation of the failed tubes. There were two members of the Augmented Inspection Team on-site during the week of March ~~13, 2012. The primary-to-secondary leak was the result of a single tube in Unit 3 steam generator 3E0-88 failing to maintain structural integrity.~~ 12 that observed portions of the in-situ pressure testing.

~~Specifically the AIT was chartered to review the circumstances surrounding the tube degradation; review the licensee's actions following discovery of the conditions; evaluate the licensee's determination of the causes of the unusual steam generator tube wear; review the steam generator modeling; and, assess the differences between Unit 2 and Unit 3 steam generators.~~

~~The team determined that plant operators responded to the event in a manner that protected public health and safety and all safety systems performed their functions to support the safe shutdown and cooldown of the plant. However, the loss of steam generator tube integrity is a serious safety issue that must be resolved prior to further power operation.~~

~~The AIT~~On March 23, 2012, NRC received a letter from SCE outlining their commitments for corrective actions prior to restart of both Unit 2 and Unit 3.

On March 27, 2012, the NRC issued a Confirmatory Action Letter to SCE, which outlined specific actions the licensee must complete before restarting Units 2 and 3 that included identifying the cause of the tube wear; taking corrective actions to prevent loss of tube integrity; and performing a mid-cycle outage to perform tube inspections.

From March 19 – 29, 2012, the NRC Augmented Inspection Team performed on-site inspections at SONGS. After the on-site portion was completed, the team continued to review various documents and attended a number of expert panels associated with the cause evaluations, thermal/hydraulic modeling, and Unit 2 operational assessment. The team identified ten unresolved items that warranted additional follow-up: (1) adequacy of the post trip/transient procedure; (2) evaluation and disposition of the Unit 3 loose parts monitor alarms; (3) design of retainer bar; (4) control of original design dimensions; (5) evaluation of and controls for divider plate repair; (6) atmospheric controls of Unit 3 steam generators during shipment; (7) no tube bundle support used during shipping; (8) evaluation and disposition of ~~accelerometer readings during shipping~~accelerometers; (9) adequacy of Mitsubishi's thermal-hydraulic model; and (10) change of methodologies associated with 10 CFR 50.59 review. ~~Consistent with existing NRC inspection processes, these unresolved issues will be inspected and dispositioned during follow-up inspection efforts to determine if there are any violations of regulatory requirements.~~

~~The AIT inspection~~

The team determined: (1) plant operators responded to the event in accordance with procedures in a manner that protected public health and safety; (2) equipment responded in accordance with the plant design; and (3) the cause evaluations for Unit 2 and Unit 3 tube wear were appropriate.

At the time of the leak on Unit 3 steam generator 3E0-88, Unit 2 had completed eddy current testing of all the tubes in both steam generators as part of their first refueling outage subsequent to the steam generators being replaced in 2009. The eddy current testing did identify significant tube wear around the upper retainer bar, with one tube requiring in-situ pressure testing. Wear indications were found at anti-vibration bar supports, tube support plates and at a foreign object (that was removed). Southern California Edison did determine the cause of tube wear in Unit 2 to be from vibration of the tubes against the retainer and anti-vibration bars. Initially, no tube-to-tube wear was identified. Because of the extensive tube-to-tube wear identified on Unit 3, SCE conducted additional eddy current testing on 1375 tubes on each Unit 2 steam generator. This testing was completed using a more sensitive probe in the same area where tube-to-tube wear was identified on Unit 3. The licensee identified that two tubes in Unit 2 exhibited tube-to-tube wear similar to the wear identified in Unit 3 steam generators. Initially, these findings resulted in a total of 94 plugged tubes, with 15 tubes stabilized in steam generator 2E0-89. For steam generator 2E0-88 this initially resulted in 98 plugged tubes, with 18 tubes stabilized. Additional plugging and stabilizing was completed for Unit 2 steam generators to address the causes of

tube-to-tube wear identified. The corrective actions taken to address the causes of the tube-to-tube wear will be inspected as part of the Confirmatory Action Letter and documented in Inspection Report 05000361, 362/2012009.

Overall, the team concluded that~~: (1)~~ SCE was ~~adequately~~ pursuing the causes of the unexpected Unit 3 steam generator tube-to-tube degradation. In an effort to identify the causes, SCE ~~retained~~brought in a ~~significant~~large number of outside industry experts, consultants, and steam generator manufacturers, including Westinghouse and AREVA to perform thermal-hydraulic and flow induced vibration modeling and analysis~~; (2) The~~. The licensee identified the most probable causes of the tube-to-tube wear as a combination of ~~unpredicted, adverse~~higher than predicted thermal-/hydraulic conditions and ~~insufficient~~improvements in the manufacturing of the Unit 3 steam generators. The improvements in the manufacturing resulted in less contact forces ~~in the upper tube bundle caused a phenomenon called~~ "between the anti-vibration bars and the tubes. The combination of these causes allowed fluid-elastic instability" ~~which was a significant contributor to the tube to tube wear resulting in the tube leak. The team concluded that the differences in severity of the tube-to-tube wear between Unit 2 and Unit 3 may be related to the changes to the manufacturing/fabrication of the tubes and other components which may have resulted in increased clearance between the anti-vibration bars and the tubes; (3) Due to modeling errors, the SONGS replacement generators were not designed with adequate thermal hydraulic margin to preclude the onset of fluid-elastic instability. Unless changes are made to the operation or configuration of the steam generators, high fluid velocities and high void fractions in localized regions in the u-bend will continue to cause excessive tube wear and accelerated wear that could result in tube leakage and/or tube rupture; (4) The thermal hydraulic phenomena contributing to the fluid-elastic instability is present in both Unit 2 and 3 steam generators; (5) Based on the updated final safety analysis report description of the original steam generators, the steam generators major design changes were appropriately reviewed in accordance with the 10 CFR 50.59 requirements. However, further review is required related to the change in methodology used for the steam generator stress analysis calculations.~~ vibration to occur. Additional on-site inspection will be required to review and closeout the unresolved items.

~~With regard to the radiological release as a result of the tube leak, it was determined that the tube leak was detected by the condenser steam jet air ejector radiation monitor as per design. In addition, the radiation monitor alarmed and alerted SONGS operators of the steam generator tube leak as required. The release resulted in an estimated 0.0000452 (4.52 E-5) mrem dose to the public.~~

TABLE OF CONTENTS


EXECUTIVE SUMMARY ..... - 1 -

SUMMARY OF FINDINGS ..... - 2-

~~SUMMARY OF FINDINGS~~ ..... 1.0 Description of Event (Charter Item 1) ..... - 3 -

1.0 ~~Description~~1 ..... Sequence of ~~Event (Charter Item 1)~~Events ..... - 3 -

1.~~1~~ ~~Sequence of Events~~2 ..... System Descriptions ..... - 6 -

~~1.2 System Descriptions~~ ..... 1.3 Resident Inspectors' Assessment of Steam Generator Tube Leak Event Response ..... - 7 -

1.~~3~~ ~~Resident Inspectors' Assessment~~4 ..... Description of Steam Generator ~~Tube Leak Event Response~~Inspections at SONGS Unit 2 ..... - 11 -

1.4~~5~~ Description of Steam Generator Inspections at SONGS Unit ~~2~~3 ..... - 14 -

~~1.5 Description of Steam Generator Inspections at SONGS Unit 3~~ ..... 1.6 In-Situ Pressure Testing ..... - 17 -

~~1.6 In-Situ Pressure Testing~~ ..... 2.0 Probable Cause Evaluation (Charter Item 2) ..... - 19 -

2.~~0~~ ~~Probable~~1 ..... SONGS Cause Evaluation ~~(Charter Item 2)~~ ..... - 19 -

2.~~1~~ ~~SCE~~2 ..... Mitsubishi Cause Evaluation ..... - 21 -

~~2.2 Mitsubishi Cause Evaluation~~ ..... 3.0 Operational Differences in Configuration and Operation Between Unit 2 and 3 (Charter item 3) ..... - 23 -

3~~4~~.0 ~~Operational~~ ..... Design and Manufacturing Differences ~~in Configuration and Operation between Unit 2 and 3~~ ~~(Charter item 3~~Item #4) (Mitsubishi Heavy Industries Charter Item 1) ..... - 25 -

4~~5~~.0 ~~Design and Manufacturing Differences~~ Quality Assurance/Quality Control (Charter Item #4~~5~~) (Mitsubishi Charter Item ~~1~~4) ..... - 40 -

5.~~0~~ ~~1~~ SONGS Quality Assurance/Quality Control ~~(Charter Item 5) (Mitsubishi Charter Item 4)~~ ..... - 40 -

5.~~1~~ ~~SONGS~~2 ..... Mitsubishi Heavy Industries Quality Assurance/Quality Control ..... - 42 -

5.~~2~~ ~~Mitsubishi~~ 3 ..... Quality Assurance/~~Quality Control~~ Conclusion ..... - 44 -

~~5.3 Quality Assurance Conclusion~~ ..... ~~6.0~~
Implementation of Steam Generator Industry Information (Charter Item 6) (Mitsubishi Heavy Industries Charter Item 3) ..... - 44 -

~~6.0 Implementation of Steam Generator Industry Information (Charter Item 6) (Mitsubishi Charter Item 3)~~ ..... ~~7.0~~
..... Packing, Shipping, Handling, and Receipt Inspection (Charter Item 7)
..... - 47 -

~~7~~8.0 ~~Packing, Shipping, Handling,~~ Thermal-hydraulic and ~~Receipt Inspection~~ Flow Induced Vibration Modeling (Charter Item ~~7~~) ..... 48 -~~8~~)
..... ~~50~~

8.0~~1~~ Thermal-hydraulic ~~and Flow Induced Vibration Modeling (Charter Item 8)~~ Assessments - 52 -

~~9.0 Risk Assessment (Charter Item 9)~~ ..... ~~8.2~~
..... NRC ATHOS Results
..... - 56 -

~~10.0 Assess Quality Assurance, Radiological Controls, and Safety Culture Components (Charter Item 10)~~ ..... ~~8.3~~
..... Conclusion
..... - 62 -

~~11~~9.0 ~~Operational impacts from Unit 3 to Unit 2~~ Risk Assessment (Charter Item ~~11~~9) ..... - 64 -

~~12~~10.0 ~~Divider Plate Manufacturing~~ Assess Quality Assurance, Radiological Controls, and ~~Weld Issues (Mitsubishi~~ Safety Culture Components (Charter Item ~~2~~10) ..... - 64 -

~~13.0 Office of Nuclear Reactor Regulation (NRR) Review of SONGS 50.59 Evaluation~~ 11.0
..... Operational impacts from Unit 3 to Unit 2 (Charter Item 11)
..... - 66 -

~~14.0 Exit Meeting Summary~~ ..... 12.0
.... Mitsubishi Divider Plate Manufacturing and Weld Issues (Mitsubishi Heavy Industries Charter Item 2)
..... - 67 -

~~ATTACHMENT 1 SUPPLEMENTAL INFORMATION~~ ..... ~~A1~~ 13.0
..... Office of Nuclear Reactor Regulation Review of SONGS 50.59 Evaluation
..... - 72 -

~~ATTACHMENT 2 SEQUENCE OF EVENTS~~ ..... ~~A2~~ 14.0
..... Exit Meeting Summary
..... - 74 -

ATTACHMENT 1: SUPPLEMENTAL INFORMATION ..... A1-1

ATTACHMENT 2: SEQUENCE OF EVENTS ..... A2-1

**U.S. NUCLEAR REGULATORY COMMISSION**
**REGION IV**

| | |
|---|---|
| Docket: | ~~50-361, 50-362~~05000362 |
| License: | ~~NPF-10, NPF-15~~ |
| Report: | ~~05000361/2012007 and~~ 05000362/2012007 |
| Licensee: | Southern California Edison Company |
| Facility: | San Onofre Nuclear Generating Station~~, Unit 2 and 3~~ |
| Location: | 5000 S. Pacific Coast Hwy<br>San Clemente, California |
| Dates: | March 15 through June 18, 2012 |
| Team Leader: | G. Werner, RIV/Branch Chief/Plant Support Branch 2 |
| Inspectors: | A. Johnson, NRR/Materials Engineer<br>E. Murphy, NRR/Senior Materials Engineer<br>J. Ortega-Luciano, NRO/Reactor Operations Engineer<br>J. Reynoso, RIV/Resident Inspector<br>J. Rivera-Ortiz, RII/Senior Reactor Inspector<br>C. Thurston, RES/Reactor Systems Engineer |
| Approved By: | Elmo E. Collins, Regional Administrator |

## SUMMARY OF FINDINGS

~~IR 05000361/2012007;~~IR 05000362/2012007, 03/15/2012 through 06/18/2012, San Onofre Nuclear Generating Station; Augmented Inspection Team.

An Augmented Inspection Team was approved on March 16, 2012. Two inspectors on the team were onsite observing in-situ pressure testing the week of March 12. The remaining inspectors were dispatched to the site on March 19, 2012, to assess the facts and circumstances surrounding the tube leak and unexpected wear of tubes in Unit 3 steam generators. The Augmented Inspection Team was established in accordance with NRC Management Directive 8.3, "NRC Incident Investigation Program," and implemented using Inspection Procedure 93800, "Augmented Inspection Team." The inspection was conducted by a team of inspectors from the NRC's Region IV and Region II offices, the resident inspector from San Onofre Nuclear Generating Station, one engineer from the NRC Office of New Reactors, two engineers from the NRC Office of Nuclear Reactor Regulation, and one engineer from the NRC Office of Research. The team identified 10 issues that will require additional NRC inspection. These issues are tracked as unresolved items in this report.

A. NRC-Identified and Self-Revealing Findings

None

B. Licensee-Identified Violations

None

1.0 Description of Event (Charter Item 1)

1.1 Sequence of Events

In November 2001, SCE formed a team to study the viability of replacing the Unit 2 and Unit 3 original steam generators. The licensee performed an assessment of six steam generator vendors, which included vendor benchmarking, development of the replacement steam generator design specifications, a steam generator request for proposal, and a steam generator bid evaluation. In September 2004, the licensee selected Mitsubishi Heavy Industries (Mitsubishi) as the manufacturer of the replacement steam generator.

A general description and comparison of the Unit 2 and Unit 3 steam generators is included in Section 1.2.1 of this report.

In September 2004, Mitsubishi commenced fabrication of Unit 2 steam generators 2E0-89 and 2E0-88, and completed fabrication in April 2008.

At the time of the contract signing in September 2004, Mitsubishi had a quality assurance program in place that had been approved by the licensee, by taking credit for other utilities' reviews of Mitsubishi's quality assurance program. The licensee informed Mitsubishi that once enough fabrication was underway to support an evaluation, the licensee would perform an audit to confirm that their quality assurance program was operating properly.

In November 2004, the licensee performed an audit of the Mitsubishi quality assurance program at their facilities in Kobe, Japan, and then followed up with a surveillance inspection in March 2005. As a result of these two activities, the licensee informed Mitsubishi that additional oversight of Mitsubishi's design control activities was required. The licensee informed Mitsubishi that the additional oversight conditions would remain in place until such time that Mitsubishi had demonstrated improved design control performance, which would be verified by the licensee. After implementing the extra quality control steps, Mitsubishi submitted a letter to SCE stating that they were ready for the conditional qualification to be lifted. The licensee performed followup audits of Mitsubishi in October 2005 and February 2006, but still found enough instances of design control issues that the additional oversight requirements of the conditional qualification were not lifted. In May 2006, SCE was able to verify that Mitsubishi had demonstrated improved design control performance and therefore removed the conditional qualification of Mitsubishi.

After fabrication of the Unit 2 steam generators was complete in April 2008, Mitsubishi performed hydrostatic pressure tests of the primary and secondary sides of the Unit 2 steam generators. In July 2008, after completion of the hydrostatic pressure tests, AREVA performed the baseline eddy current pre-service examinations of the Unit 2 steam generators at the Mitsubishi facilities in Japan. The final inspections for the Unit 2 steam generators were completed in September and October 2008, followed by filling the primary and secondary sides of the Unit 2 steam generators with nitrogen. The Unit 2 steam generators were shipped from the Mitsubishi facilities in December 2008 and received on site at SONGS in February 2009. In July 2009, AREVA performed the

final eddy current pre-service examination on the Unit 2 steam generators at SONGS. The baseline and final eddy current pre-service examinations were performed in Japan and at SONGS, respectively, to assess whether any changes to the steam generator tubing had resulted from shipping, and no changes were identified.

The Unit 2 steam generators were installed during a refueling outage, between September 2009 and April 2010. On April 13, 2010, Unit 2 returned to power operations. NRC ~~engineering~~Engineering inspectors performed inspections in accordance with procedures IP 50001 (Inspection ~~Procedure 50001, "~~50.59), Steam Generator Replacement Inspection~~,"~~ and ~~Inspection Procedure~~IP 71111.17, "Evaluations of Changes, Tests, or Experiments and Permanent Plant Modifications~~." This included a review of selected portions of modifications associated with the replacement steam generators to determine if the changes were done in accordance with 10 CFR 50.59.~~. The results of the ~~inspection~~inspections of the replacement steam generators for Unit 2 are documented in NRC Inspection Report 05000361/2009007. ~~(ML100630838)~~

The fabrication of the Unit 3 steam generators 3E0-89 and 3E0-88 was completed between September 2004 and April 2010. The design specifications of the Unit 2 and Unit 3 steam generators were the same when the contract between the licensee and Mitsubishi was signed; however, due to a fabrication issue, there was a modification to the divider plate-to-channel head weld requirements for the Unit 3 steam generators, and to the classification of the Unit 3 tubesheet material. The specifics of these modifications are discussed further in Section 1.2.a of this report.

In March 2009, after initial fabrication of the Unit 3 steam generators was complete, Mitsubishi performed hydrostatic pressure tests of the primary and secondary sides of the Unit 3 steam generators. After completion of the hydrostatic pressure tests, a visual inspection of the steam generator reactor coolant side revealed cracks in the welds that join the divider plate to the channel head of both steam generators.

From March through July of 2009, Mitsubishi performed a root cause evaluation, which showed that a change in the weld preparation process for the divider plate-to-channel head weld had resulted in the cracking of the weld. A repair procedure was developed and repair work on the Unit 3 steam generators began in June 2009. The repairs to the Unit 3 steam generators were completed in late March (3E0-89) and early April (3E0-88) of 2010. In late April 2010, the Unit 3 steam generators passed the primary hydrostatic pressure re-tests. In June 2010, AREVA performed a final eddy current pre-service examination of the steam generators at the Mitsubishi facilities in Japan, and this was used as the baseline pre-service examination for the Unit 3 steam generators. The steam generators were shipped from the Mitsubishi facilities in Japan in early August 2010, and arrived at SONGS in early October 2010.

The Unit 3 steam generators were installed during a refueling outage, between October 2010 and February 2011. On February 18, 2011, Unit 3 returned to power operations. ~~NRC engineering~~Engineering inspectors performed inspections in accordance with ~~Inspection Procedure~~procedures IP 50001, "Steam Generator Replacement Inspection~~,"~~ and ~~Inspection Procedure~~IP 71111.17, "Evaluations of Changes, Tests, or Experiments and Permanent Plant Modifications~~." This included a review of selected portions of modifications associated with the replacement steam generators to determine if the~~

~~changes were done in accordance with 10 CFR 50.59~~. The results of the ~~inspection~~inspections of the replacement steam generators for Unit 3 are documented in NRC Inspection Report 05000362/2010009. ~~(ML111300448)~~

Unit 2 was shut down for a scheduled refueling outage on January 10, 2012. Steam generator tubing inspections in steam generator 2E0-89 found unexpected wear caused by retainer bars on two tubes that required plugging in accordance with the technical specifications. Steam generator tubing inspections in steam generator 2E0-88 found wear on four tubes that required plugging in accordance with the technical specifications. Anti-vibration bars caused the wear on two of the tubes and retainer bars caused the wear on the other two tubes. Because of the unexpected wear, the licensee preventatively plugged 94 tubes in steam generator 2E0-89 and 98 tubes in steam generator 2E0-88. Fifteen of the tubes in steam generator 2E0-89 were stabilized prior to plugging, and 18 of the tubes in steam generator 2E0-88 were stabilized prior to plugging. Additional details of the inspections of the Unit 2 steam generators are provided in section 1.4 of this report

On January 31, 2012, Unit 3 control room operators received an alarm that indicated a primary-to-secondary reactor coolant leak from steam generator 3E0-88. The alarm received was from the main condenser air ejector radiation monitors, which continuously samples from a vent line for the purpose of rapidly identifying steam generator tube leaks. Although the leak rate was small, it increased enough in a short period of time for the licensee to perform a rapid shutdown. The estimated leak rate was 75 gallons per day. The facility license allows full power operation with a steady state leak rate of less than 150 gallons per day. On February 2, 2012, Unit 3 reached cold shutdown conditions. The licensee reviewed the amount of gaseous radioactivity released and estimated a dose of approximately 0.0000452 mrem to a member of the public. The annual regulatory limit to a member of the public is 100 mrem per year. This unplanned offsite release of radioactivity was reviewed by Region IV health physicist inspectors who confirmed SONGS' offsite dose estimate (see Section 10 for additional details).

After shutdown, the licensee started preparations for performing inspections of Unit 3 steam generators 3E0-89 and 3E0-88. The steam generator tube inspections commenced on February 12, 2012, and confirmed the location of the leak in steam generator 3E0-88 as coming from the tube in Row 106 Column 78. No other tubes were found to be leaking. The licensee then performed eddy current inspections of 100 percent of the tubes in both Unit 3 steam generators. During these inspections, the licensee discovered unexpected wear in both steam generators, including wear at retainer bars (similar to the wear found in Unit 2 steam generators) and significant tube-to-tube wear in the freespan areas (u-bend area of the tubes). The inspections identified 56 tubes in steam generator 3E0-89 and 73 tubes in steam generator 3E0-88 that SCE performed in-situ pressure testing on to determine if they met the structural integrity requirements in plant technical specifications. Additional details of the inspections of the Unit 3 steam generators are provided in section 1.5 of this report

From March 13 – 21, 2012, AREVA conducted in-situ pressure testing of the suspect tubes in both steam generators. There were a total of eight tube failures during testing, all in steam generator 3E0-88.

These tubes failed to satisfy the tube integrity performance criteria in the technical specifications. Additional details of the in-situ pressure tests are provided in Section 1.6 of this report.

From March 19 – 29, 2012, the NRC augmented inspection team performed inspections onsite at SONGS.

On March 27, 2012, the NRC issued a Confirmatory Action Letter to SCE, which outlined specific actions for each unit that the licensee must complete before restarting Unit 2 and Unit 3.

A more detailed sequence of events can be found in Attachment 2.

1.2 System Descriptions

a. Replacement Steam Generators

The Unit 2 and Unit 3 replacement steam generators contain thermally treated Alloy 690 tubing in a u-bend configuration, with a nominal outside diameter of 0.750 inches and a nominal wall thickness of 0.043 inches. There are 9727 tubes within each steam generator, which are arranged in 142 rows and 177 columns. The rows and columns are arranged in a nominal 1.000 inch triangular pitch (results in approximately 0.25 inches of clearance between tubes). The first thirteen rows of tubes were thermally stress relieved after bending to reduce susceptibility to stress corrosion cracking. The tubes were hydraulically expanded to the full depth of the tubesheet, which has a nominal thickness of 28.19 inches. Seven tube support plates made of Type 405 stainless steel provide lateral support ~~to~~ the tubes. The tube support plates contain broached trefoil holes with chamfered lands. Support of the tubes in the upper bundle is provided by six sets of Type 405 stainless steel, V-shaped, anti-vibration bars.

The original Model 3410 steam generators at Unit 2 and Unit 3 were manufactured by Combustion Engineering. Each steam generator had 9,350 mill-annealed, Alloy 600 tubes, which were a combination of u-bend tubes and tubes with two 90 degree bends (also called square bends). The tubes had a nominal outside diameter of 0.750 inches, and a nominal wall thickness of 0.048 inches. The tubes were expanded through the full depth of the tubesheet using an explosive process, and lateral support was provided by a number of lattice-grid (i.e., eggcrate) carbon steel tube supports. Tube support in the upper bundle was provided by carbon steel diagonal bars (commonly called batwings) and vertical straps. The original steam generators contained a cylindrically shaped support structure beneath the center of the tubesheet (called the stay cylinder) that provided structural support to the large diameter tubesheet.

Southern California Edison reviewed Information Notices, Generic Letters, Bulletins, and industry operational experience associated with steam generator issues when developing the design specifications for the replacement steam generators. Some of the changes are summarized below, for additional information see Section 6 of this report.

The design changes between the original and replacement steam generators noted above are commonly used in replacement steam generators today. The thermally

treated Alloy 690 tubing provides increased resistance to stress corrosion cracking as compared to thermally treated Alloy 600 tubing. The use of type 405 stainless steel (in lieu of carbon steel) for tube support plates eliminates the denting phenomenon associated with drilled carbon steel support plates. The use of broached trefoil holes (instead of drilled holes) in tube support plates reduces the number of contact points with tubes and increases flow area between the tube and tube support plate, thereby reducing the potential for corrosion products to buildup between the tube and the tube support plate. Combustion Engineering steam generators with the batwing design have typically suffered from wear on tubes (from the batwings) in the central stay cylinder region, due to higher cross flow velocities in this portion of the steam generators. In an effort to eliminate this high flow region, the replacement steam generators were designed with a thicker tubesheet that was inherently more rigid, and thus did not require the central stay cylinder. By choosing a design with all u-bend tubes, the bat wing design was eliminated and a new anti-vibration bar assembly was used. The new anti-vibration bar assembly is a free floating design that is supported by the tube bundle and is not attached to the tube bundle wrapper.

b. Channel Head-to-Divider Plate Weld

On March 18, 2009, after completion of the primary and secondary side hydrostatic pressure tests, a crack in the weld between the divider plate and the channel head on Unit 3 steam generator 3E0-88 was identified . Examination showed that the dissimilar metal weld, between the Alloy 690 divider plate and the low alloy steel channel head, had separated. Specifically, the failure occurred between the channel head and the Alloy 152 butter weld, which is the weld filler wire equivalent of Alloy 690. Upon examination, a similar weld failure was found in steam generator 3E0-89 although the size of the failure was not as large.

Mitsubishi performed a root cause evaluation and found that air carbon-arc gouging was used to remove the stainless steel cladding from the channel head, in preparation for making the divider plate-to-channel head dissimilar metal weld. The air carbon-arc gouging had resulted in carbon deposits in the channel head that were not completely removed by grinding that was performed after the gouging operation. The high carbon area increased the hardness of the channel head (due to carburization) and was the most probable cause of the failure between the channel head and the Alloy 152 butter weld. Mitsubishi also found that it was possible, but less probable, that the increased hardness of the channel head promoted hydrogen induced cracking in areas of the divider plate-to-channel head weld that had higher local stresses due to geometric configurations (i.e., at the corner of the divider plate).

1.3 Resident Inspectors' Assessment of Steam Generator Tube Leak Event Response

a. Inspection Scope

On January 31, 2012, the resident inspectors were on-site during the Unit 3 steam generator tube leak event. The resident inspectors observed the licensee's response to the steam generator tube leak from the control room; and observed the rapid shutdown, actions to cool the plant down, actions performed during recovery of plant systems, and other operator actions. Additionally, the resident inspectors conducted a review of

control room activities and equipment response to determine if the operating crew responded appropriately and if the plant systems responded as expected during the event. The resident inspectors conducted interviews with various on-shift personnel and reviewed the post trip report, which included control room logs, operator statements, and plant data trends to assess overall performance of the crew. The review also included procedure use and adequacy of the guidance used for event response, placing the plant in a safe and stable condition, establishing appropriate parameter limits for plant cooldown, and conducting the cooldown to cold shutdown conditions. With respect to operator awareness and decision making, the resident inspectors were specifically focused on the effectiveness of control board monitoring, technical decision making, and work practices of the operating crew. With respect to command and control, the resident inspectors focused on actions taken by the control room supervision in managing the operating crew's response to the event.

b. Observations and Findings

No findings were identified.

The team identified one unresolved item for which additional information is required to determine if performance deficiencies exist or if the issue constitutes a violation of NRC requirements.

On January 31, 2012, at 3:05 p.m. (PST), main control room operators at Unit 3 received a secondary plant system radiation alarm associated with the air ejectors followed by a blowdown radiation monitor alarm. Operations personnel responded in accordance with Abnormal Operating Instruction SO23-13-14, "Reactor Coolant Leak," Revision 16, since the entry conditions for a steam generator tube leak were satisfied. Operations personnel determined the leakage to be about 75 gallons per day, using a mass balance calculation (.06 gpm), from steam generator 3E0-88. This leak rate was below the Technical Specification 3.4.13, "RCS Operational Leakage," limit of 150 gallons per day for primary- to-secondary leakage through any one steam generator.

At 4:10 p.m., operations personnel evaluated that the primary-to-secondary leak rate exceeded 75 gallons per day on steam generator 3E0-88 and that the leak was increasing at greater than 30 gallons per day per hour, and consequently, initiated a rapid power reduction to be ≤ 50 percent power in one hour and in Mode 3 within the next two hours per Abnormal Operating Instruction SO23-13-14. In accordance with Abnormal Operating Instruction SO23-13-14, when reactor power was less than 35 percent, operations personnel tripped the reactor at 5:31 p.m. to enter Mode 3.

Due to the manual reactor trip, operations personnel entered Emergency Operating Instruction SO23-12-1, "Standard Post Trip Actions," Revision 26, to ensure the plant was placed in a stable, safe condition, and that the plant was configured to respond to the continuing steam generator tube leak event. Operations personnel implemented the emergency operating instructions and isolated the affected steam generator at 6:00 p.m. A plant cooldown was conducted by using main steam bypass from steam generator 3E0-89 to the main condenser. Mode 4 conditions were achieved at approximately 6 hours after isolation of the steam generator. Cooldown continued until Unit 3 was in Mode 5, cold shutdown.

The resident inspectors concluded that abnormal and emergency operating instructions were performed consistent with expected standards and that operations personnel exhibited the fundamental operator competencies in response to the Unit 3 steam generator tube leak event.

Specifically, the resident inspectors determined that the operating crew displayed a questioning attitude of changing plant parameters and took conservative actions. The operating crew identified important preliminary increasing trends of Unit 3 air ejectors radiation monitors and subsequent alarms in a timely manner for a tube leak in steam generator 3E0-88. Additionally, the resident inspectors determined that crew supervision exercised effective oversight of plant status, crew performance, and control room command and control.

(1) Introduction: The team identified an unresolved item associated with Operations Procedure SO123-0-A8, "Trip/Transient and Event Review," that required a formal review of operator actions and safety systems to determine if important systems responded as design. The formal review was not completed.

Description: On March 19, 2012, the team requested to review the results of operations post trip/transient evaluation of the January 31, Unit 3 tube leak event. Operations Procedure SO123-0-A8, "Trip/Transient and Event Review," Revision 8, required a detailed post trip review following unplanned reactor trips. However, a formal trip/transient and event review was not available because operations personnel determined the Unit 3 event was planned and therefore a formal review was not required.

On March 27, 2012, Team met with operations personnel to discuss items on a draft Unit 3 trip/transient evaluation provided to the team. The team also discussed with operations personnel the requirements in Operations Procedure SO123-0-A8, and concluded a basis for what was "planned" and "unplanned" was not defined. Operations personnel determined the Unit 3 reactor trip was a planned reactor trip because Abnormal Operating Instruction SO23-13-14, "Reactor Coolant Leak," Revision 16, Section 4, had described actions for primary-to-secondary leakage. Specifically, this section stated, in part, under plant conditions of increasing steam generator tube leakage, operations personnel were required to perform a rapid power reduction to less than 35 percent power, then trip the reactor.

The team discussed with operations personnel that definitions for unplanned events have been established through industry standards to report on plant performance. These standards include NEI 99-02, "Regulatory Assessment Performance Indicator Guideline," Revision 6. Industry Guidance NEI 99-02 indicated that Unit 3 reactor trip should be considered unplanned since the reactor trip was required by an abnormal operating instruction and would count against the performance indicator for unplanned reactor trips. NRC Regulatory Issue Summary (RIS) 2000-08, "Voluntary Submission of Performance Indicator Data," Revision 1, allows industry to use NEI 99-02 to report performance indicator data.

Additional review and follow up will be required to review the corrective actions associated with the procedural guidance for an event review and then determine whether this issue represents a performance deficiency or constitutes a violation of NRC requirements. This issue is identified as URI 05000362/2012007-01, "Adequacy of the Trip/Transient and Event Review Procedure."

~~c. Conclusions~~

~~The resident inspectors concluded that abnormal and emergency operating instructions were performed consistent with expected standard and that operations personnel exhibited the fundamental operator competencies in response to the Unit 3 steam generator tube leak.~~

~~Specifically, the resident inspectors determined that the operating crew displayed a questioning attitude of changing plant parameters and took conservative actions. The operating crew identified important preliminary increasing trends of Unit 3 air ejectors radiation monitors and subsequent alarms in a timely manner for a tube leak in steam generator 3E0-88. Additionally, the resident inspectors determined that crew supervision exercised effective oversight of plant status, crew performance, and control room command and control.~~

~~The team identified one unresolved item associated with the adequacy of the trip/transient procedure.~~

1.4 Description of Steam Generator Inspections at SONGS Unit 2

On January 10, 2012, SONGS Unit 2 was shutdown for a refueling outage. Southern California Edison personnel conducted a scheduled steam generator inspection in accordance with Technical Specification ~~5.5.2.11~~6.6.9, "Steam Generator (SG) Program." This was the first inspection of the Unit 2 steam generators since their replacement in January 2010. The accumulated operating time on the replacement Unit 2 steam generators was 1.7 effective full power years. There was no reported primary-to-secondary leakage at the time of shutdown.

The scope of the inspection included a 100 percent tube sample with an eddy current test bobbin probe over the full tube length, followup rotating coil inspections at special interest locations, and a secondary side foreign object search and retrieval. Three types of flaw indications were found in the tubes:

- Wear at the tube support plate and anti-vibration bar supports
- Wear caused by a loose part
- Wear at retainer bars

With the exception of the wear indications found at tube retainer bar locations, the wear indications found are similar to those found at other replacement steam generators after one cycle of operation. A total of 2411 tubes were found with indications at the tube support plates and anti-vibration bar supports, the vast majority of which had a measured depth of less than 20 percent of the tube wall thickness. Only two of these indications, located at the anti-vibration bar supports, exceeded the Technical Specification ~~5.5.2.11~~6.6.9.c repair limit of 35 percent of the tube wall thickness. The two affected tubes plus two additional tubes with 31 percent deep indications were stabilized and plugged.

Southern California Edison performed a reanalysis of the bobbin probe eddy current data collected during the Unit 2 inspection program. This reanalysis was performed after the finding of the long free-span indications in Unit 3, allowing insights gained during the Unit 3 inspections to be applied to the Unit 2 data. The scope of this reanalysis was a "box" of 1000 tubes in each Unit 2 steam generator which bounded the region of tubing affected by the instability damage in Unit 3. This reanalysis~~, using the bobbin probe,~~ confirmed the results of the original analysis and did not identify any tube-to-tube wear.

Two tubes were found with indications (less than 35 percent through wall) caused by a small loose part on the secondary side. This loose part was removed from the steam generator. Metallurgical analysis indicated the loose part was a piece of weld metal, most likely introduced during steam generator manufacturing operations. The two affected tubes were left in service.

Six tubes were found with indications at retainer bar intersections. The retainer bars are part of the support structure for the anti-vibration bars and are a unique feature of steam generators manufactured by Mitsubishi. The measured indication depths ranged from 28 to 90 percent of the tube wall thickness. Because of the short measured lengths of these flaws, only the 90 percent indication was in-situ pressure tested as part of condition monitoring. The affected tube was successfully pressurized to 5300 psi with no leakage, confirming that the Technical Specification ~~5.5.2.11.b.1 structural~~6.6.9.b tube integrity performance criteria were met. Mitsubishi attributed the cause of these indications to retainer bar vibration, the potential for which had not been evaluated during design (see Section 4 ~~of this report for additional details).~~ for additional details). Fort Calhoun is the only other domestic plant with Mitsubishi steam generators. The retainer bars at Fort Calhoun are significantly stiffer than at SONGS.

The six tubes with retainer bar indications have been plugged and stabilized. In addition, the remaining 182 tubes (total for both Unit 2 steam generators) that intersect the retainer bars were plugged as a preventive measure. Twenty four of these tubes were stabilized prior to plugging to ensure that all 188 plugged tubes will not sever due to continued vibration of the retainer bar. The tubes that were stabilized are strategically located at each end and center of the retainer bars.

Detailed plans for returning Unit 2 to service are still under development. Short-term plans relating to Unit 2 included conducting a full u-bend examination of 1375 tubes in both steam generators using a rotating coil. The tube sample was intended to ~~bound~~totally box-in the region affected by free-span wear seen in Unit 3 by significant margin. The rotating coil provides a slightly more sensitive inspection for long free-span wear scars than the bobbin probe. These inspections were performed subsequent to the team's site visit and identified two tubes in Unit 2 steam generator 2E0-89 with shallow free-span wear in the u-bend region. These indications both measured approximately 14 percent deep, and were located in the same region of the bundle affected by free-span indications in the Unit 3 steam generators.

The tube wear data for Unit 2 is shown below.

**SONGS Unit 2 Steam Generators**

**Wear Depths Summary**

| Steam Generator SG2E88 (Through- Wall Wear) | Anti-Vibration Bar | Tube Support Plate | U-Bend Freespan | Retainer Bar | Foreign Object | Total Indications | Tubes with Indications |
|---|---|---|---|---|---|---|---|
| ≥ 50% | 0 | 0 | 0 | 1 | 0 | 1 | 1 |
| 35 - 49% | 2 | 0 | 0 | 1 | 0 | 3 | 3 |
| 20 - 34% | 86 | 0 | 0 | 0 | 2 | 86 | 74 |
| 10 - 19% | 705 | 108 | 0 | 0 | 0 | 813 | 406 |
| TW < 10% | 964 | 117 | 0 | 0 | 0 | 1081 | 600 |
| TOTAL | 1757 | 225 | 0 | 2 | 2 | **1984** | **734*** |

| Steam Generator SG2E89 (Through- Wall Wear) | Anti-Vibration Bar | Tube Support Plate | U-Bend Freespan | Retainer Bar | Foreign Object | Total Indications | Tubes with Indications |
|---|---|---|---|---|---|---|---|
| ≥ 50% | 0 | 0 | 0 | 1 | 0 | 1 | 1 |
| 35 - 49% | 0 | 0 | 0 | 1 | 0 | 1 | 1 |
| 20 - 34% | 78 | 1 | 0 | 3 | 0 | 82 | 67 |
| 10 - 19% | 1014 | 85 | 2 | 0 | 0 | 1101 | 496 |
| TW < 10% | 1499 | 53 | 0 | 0 | 0 | 1552 | 768 |
| TOTAL | 2591 | 139 | 2 | 5 | 0 | **2737** | **861*** |

~~*This value is the number of tubes with wear indications of any depth and at any location. Since many tubes have indications in more than one depth and location, the total number of tubes is less than the total number of indications.~~

*This value is the number of tubes with wear indications of any depth and at any location. Since many tubes have indications in more than one depth and location, the total number of tubes is less than the total number of indications.

1.5 Description of Steam Generator Inspections at SONGS Unit 3

After shutdown, the licensee started preparations for performing inspections of Unit 3 steam generators 3E0-89 and 3E0-88. The steam generator tube inspections commenced on February 12, 2012, and confirmed the location of the leak in steam generator 3E0-88 as coming from the tube in Row 106 Column 78. The leak was located 2 inches beyond anti-vibration support number 4 on the hot leg side. It was found to be associated with a long (approximately 30 inches) free-span flaw indication. No other tubes were found to be leaking.

The licensee then performed eddy current inspections of 100 percent of the tubes, full length, in both Unit 3 steam generators with a bobbin probe. The bobbin probe examinations were supplemented by rotating coil examinations to confirm, characterize, and size the indications found by the bobbin probe. These examinations identified over 160 tubes in each steam generator with long free-span indications similar to that found on the leaking tube. In each steam generator, the tubes containing the free-span indications were grouped together in a tightly packed zone near the center of the tube bundle. The free-span indications were located on the upper and/or lower sides (i.e., the extrados and intrados) of the u-bend. Thus, a given free-span indication on the extrados of one tube tended to be matched by a similar indication on the intrados of the adjacent higher row tube located in the same tube column. This pattern provided early evidence to SCE personnel that the free-span indications were wear flaws due to tube-to-tube contact from motion of the u-bends within the plane of the u-bends. More than half of the free-span indications in each steam generator had maximum measured depths exceeding the 35 percent plugging limit in the technical specifications, and ranged to as much as 99 percent (for the non-leaking tubes).

Over 460 tubes in each steam generator were found with wear indications at the tube support plates. In general, tubes exhibiting the free-span wear indications tended to exhibit tube support plate indications with the highest depth measurements, typically with the deepest values at the seventh tube support plate and trending down at successively lower support levels. Approximately 170 tubes in each steam generator exhibited indications at the tube support plates that exceeded the 35 percent plugging limit, with maximum depths ranging to 70 percent.

Approximately 800 tubes in steam generator 3E0-88 and 900 tubes in steam generator 3E0-89 exhibited wear indications at the anti-vibration bar supports. Most of these measured less than 20 percent deep, and only 2 indications exceeded the 35 percent plugging limit. For tube indications at anti-vibration bars in tubes not exhibiting free-span u-bend indications, the length of the wear indications was confined to within the width of the anti-vibration bars. This was also true in SONGS Unit 2. For tubes that exhibited free-span indications, many of these tubes had wear indications at the anti-vibration bars that extended outside the width of the anti-vibration bars which indicated in-plane movement of these tubes in the u-bend area.

Four tubes were found with indications at retainer bar intersections, with measured depths ranging from 28 to 46 percent. At the time of the team's presence at the site, planned corrective actions with respect to tubes adjacent to the retainer bar were similar to those completed for Unit 2. The four tubes with retainer bar indications were plugged and stabilized. In addition, the remaining 184 tubes (total for both Unit 3 steam generators) that intersect the retainer bars were plugged as a preventive measure. Twenty four of these tubes were stabilized prior. The tubes that were stabilized are strategically located at each end and center of the retainer bars.

Tube wear data for Unit 3 is shown below.

**SONGS Unit 3 Steam Generators**
**Wear Depths Summary**

| Steam Generator SG3E88 (Through- Wall Wear) | Anti-Vibration Bar | Tube Support Plate | Tube-to-Tube Wear | Retainer Bar | Foreign Object | Total Indications | Tubes with Indications |
|---|---|---|---|---|---|---|---|
| ≥ 50% | 0 | 117 | 48 | 0 | 0 | 165 | 74 |
| 35 - 49% | 3 | 217 | 116 | 2 | 0 | 338 | 119 |
| 20 - 34% | 156 | 506 | 134 | 1 | 0 | 797 | 197 |
| 10 - 19% | 1380 | 542 | 98 | 0 | 0 | 2020 | 554 |
| TW < 10% | 1818 | 55 | 11 | 0 | 0 | 1884 | 817 |
| TOTAL | 3357 | 1437 | 407 | 3 | 0 | 5204 | 919* |

| Steam Generator SG3E89 (Through-Wall Wear) | Anti-Vibration Bar | Tube Support Plate | Tube-to-Tube Wear | Retainer Bar | Foreign Object | Total Indications | Tubes with Indications |
|---|---|---|---|---|---|---|---|
| ≥ 50% | 0 | 91 | 26 | 0 | 0 | 117 | 60 |
| 35 - 49% | 0 | 252 | 102 | 1 | 0 | 355 | 128 |
| 20 - 34% | 45 | 487 | 215 | 0 | 0 | 747 | 175 |
| 10 - 19% | 940 | 590 | 72 | 0 | 0 | 1602 | 450 |
| TW < 10% | 2164 | 94 | 1 | 0 | 0 | 2259 | 838 |
| TOTAL | 3149 | 1514 | 416 | 1 | 0 | **5080** | **887*** |

~~*This value is the number of tubes with wear indications of any depth and at any location. Since many tubes have indications in more than one depth and location, the total number of tubes is less than the total number of indications.~~
Detailed plans for satisfying the provisions of the NRC March 27, 2012, Confirmatory Action Letter for SONGS Unit 3 were not available and were still being developed.

1.6 In-Situ Pressure Testing

Technical Specification 5.5.~~2.11~~9.a for SONGS Units 2 and 3 requires that a condition monitoring assessment be performed during each outage that the steam generator tubes are inspected or plugged to confirm that the tube integrity performance criteria are being met. These performance criteria include ~~specific requirements~~standard criteria for ~~tube~~ structural integrity and accident ~~induced~~ leakage integrity. The limiting structural criterion applicable to the SONGS Units 2 and 3 is the normal steady state pressure differential across the tubes times a safety factor of three. The limiting accident ~~induced~~ leakage criterion is 0.5 ~~gpm~~gallons per minute under main steam ~~generator~~line break conditions.

Typically, the requirement for performing condition monitoring is satisfied by analyzing eddy current flaw indications relative to screening criteria that are functions of measured flaw depth, length, and/or eddy current voltage response. These screening criteria are conservative relative to the performance criteria since they make allowance for eddy current measurement error, uncertainties with respect to voltage correlations with flaw depth and burst strength, and material property variability. When these screening criteria are exceeded, in-situ pressure tests may be performed for tubes not meeting the screening criteria to confirm that the performance criteria are met for these tubes. In-situ pressure test procedures at SONGS and the screening criteria for selecting tubes to be tested were in accordance with Electrical Power Research Institute Report 1014983, "Steam Generator In-Situ Pressure Test Guidelines," Revision 3.

At Unit 2, one tube with a measured 90 percent deep indication at a retainer bar location was determined to be outside the screening criteria and was in-situ pressure tested. For Unit 3, an optional strategy to the screening criteria approach was taken in accordance with the Steam Generator In-Situ Pressure Test Guidelines, Appendix A. The Appendix A approach is a statistically based Monte Carlo approach that samples the uncertainty distributions associated with each of the input parameters for calculating

tube burst pressure. This methodology selects all tubes determined to have a 0.95 probability or less of meeting the limiting structural integrity performance criterion. Application of this methodology led to selection of 129 tubes on Unit 3 for in-situ pressure testing, 73 tubes in steam generator 3E0-88 and 56 tubes in steam generator 3E0-89.

The in-situ pressure tests were performed under ambient conditions. Therefore the test pressures were adjusted upward from actual values under hot conditions to account for the increased yield and ultimate strength of the tube material under ambient conditions. The test pressures (with correction factors added) corresponding to normal operating conditions, main steam line break, and three times normal operating pressure differential were 1850 psi, 3200 psi, and 5300 psi, respectively.

The test procedure involved pressurizing the subject tube at a rate not to exceed 200 psi/sec to each test point. At each test point, pressure was held constant for two minutes if the tube was not leaking. If the tube was leaking, pressure was held constant for five minutes before ramping to the next test pressure.

The tube with a 90 percent deep retainer bar indication in Unit 2 was successfully tested to 5300 psi with no leakage. This demonstrated that all performance criteria were met for this tube. For Unit 3, 136 of the 144 tubes were successfully tested to 5300 psi with no leakage, demonstrating that these tubes met the performance criteria. The remaining eight tubes "failed" prior to reaching 5300 psi. Failure in this context means that leakage occurred in excess of the 4.5 gallons per minute pump capacity during the test, and test pressure could not be maintained. All eight tubes that failed were in steam generator 3E0-88. All tubes tested in steam generator 3E0-89 passed with no leakage.

Table 1 summarizes the in-situ pressure test results for the eight tubes that failed the test. Three of the eight tubes failed at or below the test pressure corresponding to main steam line break differential pressure. The tube that leaked causing shutdown of SONGS Unit 3 (row 106, column 78) exhibited the lowest failure pressure, 2874 psi. The three tubes that failed at or below main steam line break pressure failed to meet the accident leakage performance criteria as well as the structural integrity performance criteria. The other five tubes met the accident leakage criteria, but failed to meet the structural criteria.

Prior to being tested to failure, the tube that leaked during operation (row 106, column 78) exhibited a measured leak rate of 0.072 gallons per minute at a test pressure corresponding to normal operating conditions. This compares with a leak rate of 0.06 gallons per minute measured by SCE operating staff for SONGS Unit 3 when they made the decision to shut the plant down. The reported operational leakage was evaluated based on ambient conditions. Both the operational and test measurements are less than the applicable technical specification limit of 0.1 gallons per minute.

Table 1 – SONGS 3 In-Situ Pressure Test Results

| SG | Row | Column | Leak Rate at Normal Operating Conditions (gpm) | Leak Rate at Main Steam Line Break (gpm) | Failure Pressure (psi) |
|---|---|---|---|---|---|
| 88 | 106 | 78 | 0.072 | >0.5 | 2874 |
| 88 | 102 | 78 | 0 | >0.5 | 3268 |
| 88 | 104 | 78 | 0 | >0.5 | 3180 |
| 88 | 100 | 80 | 0 | >0.5 | 4732 |
| 88 | 107 | ~~77~~87 | 0 | >0.5 | 5160 |
| 88 | 101 | 81 | 0 | >0.5 | 4889 |
| 88 | 98 | 80 | 0 | >0.5 | 4886 |
| 88 | 99 | 81 | 0 | >0.5 | 5026 |

2.0 Probable Cause Evaluation (Charter Item 2)

While the team was on-site, both SCE and Mitsubishi were in the process of conducting cause evaluations for the tube ~~failures~~failure and unexpected wear of steam generator tubes in Unit 3. As part of both evaluations, actions were being taken to understand the differences between Unit 2 and 3 steam generators. The cause evaluations were not complete and were undergoing changes while the Augmented Inspection Team was onsite; however, SCE did subsequently complete their cause evaluation prior to the team's exit meeting. The team did a detailed review of the completed cause evaluation.

2.1 ~~SCE~~SONGS Cause Evaluation

a. Inspection Scope

The team conducted an overall and independent review of SCE's actions taken to understand the probable cause for the steam generator tube degradation. The team reviewed the updated final safety analysis report, technical specifications, design basis documents, original steam generator design, replacement steam generator design, purchase order specifications, design changes, manufacturing changes, nonconformance reports, supplier deviation reports, and interviewed personnel. The review included understanding the licensee's criteria for determining the cause, or if one could not be determined, the most probable cause.

b. Observations and Findings

No findings were identified.

The team participated in discussions with the licensee's cause analysis team and noted that the licensee employed various root cause evaluation techniques. These included a change analysis technique that compared design differences and a problem analysis technique relying on a systematic process that looked at the causal effects and risk assessments of possible causes. The team reviewed the licensee causal analysis summary that assigned a ranking of highly probable to unlikely.

In the area of thermal hydraulic analysis the licensee contracted AREVA to verify the accuracy of Mitsubishi's thermal-hydraulic code (FIT III) used during the design of the replacement steam generators, by comparing it to ATHOS, a thermal-hydraulic code developed by the Electric Power Research Institute (EPRI). In addition, SCE contracted Westinghouse to perform a completely independent analysis using a Westinghouse modified ATHOS thermal-hydraulic code. AREVA also performed independent flow induced vibration analyses. The licensee brought on board MPR associates and numerous other technical experts, including a world renowned expert in flow induced vibration, to assist in the cause assessment. The team observed that SCE preliminary causal analysis was generally consistent with that of Mitsubishi. Initially, the licensee reviewed the following cause contributors:

- Departure from original steam generator u-bend/anti-vibration bar configuration - highly probable
- Departure from original steam generator stay cylinder configuration - possible
- Departure from original steam generator tube support plate configuration - possible
- Replacement steam generator anti-vibration bar structure too flexible - possible
- Additional 300 rotations of Unit 3 replacement steam generator due to divider plate repair work - possible
- Thermal-hydraulic and flow induced vibration models used in replacement steam generator design incorrectly predicted replacement steam generator tube bundle behavior – possible

The team observed that the licensee performed a detailed analysis and attempted to address all probable causes. The team observed that some of the conditions which were eliminated as potential contributors may need further evaluation. In particular, the team ~~determined~~believed that the only major difference between Units 2 and 3 was the divider plate repair to both Unit 3 steam generators. This difference had been discounted by both SCE and Mitsubishi. The divider plate is further discussed in Section 12.0 of this report.

~~e. Conclusions~~

The completed SCE cause evaluation identified the mechanistic cause of the tube-to-tube wear as fluid-elastic instability caused by a combination of localized high steam/water velocity, high steam void fraction, and insufficient contact forces between the anti-vibration bars and the tubes. The Mitsubishi thermal/hydraulic model under-predicted the actual thermal/hydraulic conditions in the steam generator and improvements in fabrication between Unit 2 and Unit 3 steam generators led to the

reduced contact forces.

2.2 Mitsubishi Cause Evaluation

a. Inspection Scope

The team conducted an overall and independent review of Mitsubishi's actions taken to understand the probable cause of the steam generator tube degradation. While onsite, the inspection team was informed that Mitsubishi was performing a failure analysis to characterize the mechanism causing the tube-to-tube wear condition in Unit 3. The team had periodic discussions with Mitsubishi personnel to gather information on the probable causes under consideration. The team reviewed information contained in the updated final safety analysis report, technical specifications, design basis documents, purchase order specifications, design changes, design drawings, manufacturing changes, nonconformance reports, and supplier deviation reports to understand the design and fabrication of the replacement steam generators and independently assess the information obtained from Mitsubishi's in-progress cause evaluation.

b. Observations and Findings

No findings were identified.

The team determined that Mitsubishi was performing a thorough evaluation of the failure mechanism leading to the tube-to-tube wear in Unit 3. The team noted that Mitsubishi gathered factual information about the design, fabrication, and operation of the replacement steam generators in Unit 2 and Unit 3 to understand the differences between these components and identify potential contributing causes. The team discussed the preliminary failure mechanism theory with Mitsubishi personnel, who attributed the tube-to-tube; wear to a combination of design, fabrication, and operational factors.

Mitsubishi's preliminary explanation of the failure mechanism started with the combination of two factors: (1) a relatively small tube pitch to tube diameter ratio (P/D), and (2) high void fraction in the tube bundle area where the tube-to-tube wear was identified. The small pitch to diameter ratio was a fixed parameter in the replacement steam generators established by the nominal center-to-center distance between adjacent tubes (P) and the nominal outside diameter of the tubes (D). The high void fraction was identified from the results of Mitsubishi's thermal-hydraulic model for the secondary side of the replacement steam generators. Mitsubishi considered that the combination of these two factors may have resulted in favorable conditions for in-plane tube vibration based, in part, on the results of recent studies in fluid-elastic instability.

Additionally, Mitsubishi identified that the Unit 3 replacement steam generators had better dimensional controls during the fabrication process. This determination was based, in part, on the results of pre-service and in-service eddy current examinations, and fabrication data from Unit 2 and Unit 3 replacement steam generators. The correlation of dimensional controls with the failure mechanism was that improved dimensional controls for Unit 3 replacement steam generators resulted in less variability

of as-built critical dimensions such as anti-vibration bar thickness, tube roundness, and gaps between tubes and anti-vibration bars. Condition Report 201836127, Cause Evaluation, Revision 0, lists one of the mechanistic causes of the tube-to-tube wear to be associated with the reduction in dimensional variability that resulted in less contact force between the tubes and the anti-vibration bars.

The failure mechanism model also considered a fluid dynamic effect associated with the spreading of the tubes in the U-bend region during normal operating conditions. This effect was informally referred to as "flowering," due to the characteristic shape in which the tube bundle spreads transverse to the plane of the u-bends at normal operating conditions. "Flowering" was described as the elastic deformation of the anti-vibration bar structure and the tube bundle in the U-bend region, as a result of thermal expansion and fluid dynamic pressure acting on the secondary side of the tubes (see figure below). The deformation caused by the "flowering" effect was believed to result in multiple areas of no contact between the anti-vibration bars and the tubes, which minimized resistance to in-plane motion of the u-bend area of the tubes.

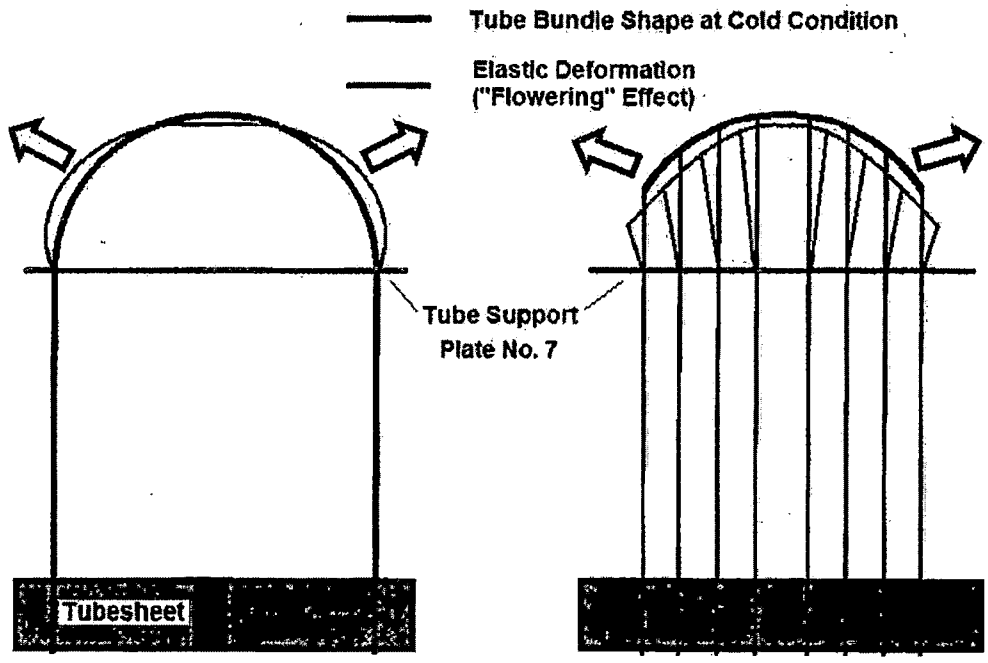


Description of "Flowering" Effect (Conceptual Drawing – For Illustration Purposes Only)

Mitsubishi considered that the collective contribution of the factors described above resulted in conditions in the U-bend that were highly susceptible to excessive tube vibration. The in-plane vibration of the tubes in the U-bend region allowed direct contact between free-span sections of the tubes, resulting in the unanticipated tube-to-tube wear.

At the conclusion of the onsite portion of this inspection, Mitsubishi was further evaluating the failure mechanism by conducting in-depth analyses of available data to

validate their failure mechanism theory. One of the analyses included analytical studies of the impact of anti-vibration bar gap size, free-span length, fluid-elastic vibration, and contact forces on tube wear depth. An expected outcome of this analysis was that contact forces and the number of inactive supports should be the biggest contributors to wear under fluid-elastic instability conditions. Additionally, Mitsubishi was conducting further analytical studies of the "flowering" effect by modeling multiple cases of elastic displacement of the tube bundle structure, taking into consideration thermal expansion and dynamic pressures. Concurrent with these analyses, Mitsubishi was studying the effect of manufacturing dispersion on tube wear. Specifically, Mitsubishi was modeling multiple cases of manufacturing variability to study the influence of different dimensional controls on gap and contact forces. Mitsubishi was using as-built data as well as manufacturing tolerances to statistically assess the impact of dimensional controls on the resulting gaps and contact forces in different areas of the tube bundle. ~~Based on the data reviewed by the team, the standard deviation of the tube ovality (G-value) decreased during each successive fabrication run of the steam generator tubes (order of tube fabrication -> U2E0-89, U2E0-88, U3E0-89, and U3E0-88).~~ One of the expected outcomes of this analysis was that manufacturing variability in Unit 3, in combination with the "flowering" effect, would result in a reduction of contact forces in Unit 3 relative to those in Unit 2. During the on-site portion of this inspection, the results of these studies were not finalized and additional failure analysis tasks were scheduled to accurately characterize the failure mechanism and support the cause determination.

~~c. Conclusions~~

At the time of the exit, Mitsubishi was still completing their independent cause analysis. ~~The team was unable to evaluate this aspect; however~~As part of the Confirmatory Action Letter inspection, the final Mitsubishi cause evaluation will be reviewed ~~as part of the Confirmatory Action Letter inspection. No conclusions were reached with regard to the Mitsubishi cause evaluation at this time.~~

3.0 Operational Differences in Configuration and Operation between Unit 2 and 3 (Charter item 3)

a. Inspection Scope

The team reviewed Unit 2 and 3 Cycle 16 operational data records found in operator logs and the plant computer system. The team focused on differences in configuration and operation between Units 2 and 3. The team evaluated full power operational data between Unit 2 and Unit 3 steam generators after each were replaced. From this data the team compared key plant parameters and other indications such as temperature, flow, power, pressure, and vibration and loose parts monitoring alarms. The team reviewed operational differences between Units 2 and 3 in order to gain information and to assess if these differences could have had an impact on the observed differences in the steam generator tube wear between the units.

b. Observations and Findings

~~The team~~ No findings were identified ~~one unresolved item for which additional information is required to determine if~~.

The team looked at a ~~performance deficiency exists or if the issue constitutes a violation of NRC requirements. The team also modeled the impact~~ number of operational differences ~~on~~from the ~~predicted~~perspective of the thermal-hydraulic disparities. The team also evaluated the significance of these differences insofar as potential impact to tube degradation. It was noted that Unit 3 ran with slightly higher primary temperatures, about 4°F higher than Unit 2. Other differences were noted in steam and feedwater flow but none~~response~~ of the differences were considered sufficient to significantly affect thermal hydraulic characteristics inside the steam generators.— In addition, the team also identified that Unit 3 steam generators had numerous valid vibration and loose parts monitoring system alarms compared to Unit 2 steam generators.

(1) Introduction: The team identified an unresolved item associated with the number of valid vibration and loose parts alarms observed in Unit 3 steam generators compared to Unit 2 steam generators, during steady state conditions.

Description: During the review of operational differences between Unit 2 and 3 steam generators the team identified a significant difference in number of valid vibration and loose parts monitoring system alarms. The vibration and loose parts monitoring system was designed to provide continuous monitoring and conditioning of loose parts accelerometer signals. Two separate accelerometers were installed on each of the steam generators. The location of these instruments are on the steam generators' lower supporting structures and provide acoustic information about loose parts impacts specifically on the reactor coolant or primary side of the steam generators. The vibration and loose parts monitoring system real time functions consist mainly of impact alarm validation of suspected loose part events and recording acoustic data. Long term vibration monitoring and loose part event trending were done by engineering personnel using recorded data.

Unit 3 returned to service in February 2011, and the resident inspectors noted a number of nuclear notifications associated with Unit 3 steam generators vibration and loose parts monitoring alarms. On January 20, 2012, prior to the Unit 3 tube leak, engineering personnel also identified this trend and documented in Nuclear Notification NN 201818719 this problem and assigned an action to do further evaluation. On February 3, 2012, engineering personnel sent two sets of alarm signatures to Westinghouse, which contained impact data on alarms for time periods of steady state operation (i.e., no major temperature changes). Westinghouse engineering personnel concluded that the acoustic signals picked up by the accelerometers were valid and similar in nature to acoustic signatures caused by thermal movement of a steam generator expected during changes in thermal conditions, such as plant startup or shutdown. However the data obtained and analyzed had been taken during steady state operations. The team noted that Unit 2 steam generators did not receive the same number and type of alarms during a similar period of steady state operations. Engineering personnel also compared hot leg temperature changes linked to Unit 3 operations from February 18, 2011, to January 31, 2012, and confirmed about 30 valid alarms during this period were not associated with thermal transients.

Additional review and follow up will be required of the vibration and loose parts monitoring system alarms, including evaluation and disposition of Unit 3 alarms and then determine whether this issue represents a performance deficiency or constitutes a violation of NRC requirements. This issue is identified as URI 05000362/2012007-02, "Evaluation of Unit 3 Vibration and Loose Parts Monitoring System Alarms."

(2) ~~Operational Differences~~Introduction: The team performed a number of different thermal-hydraulic analysis of Units 2 and 3 steam generators. The output of the various analyses runs where then compared and reviewed to determine if those differences could have contributed to the significant change in steam generator tube wear. ~~It was noted that Unit 3 ran with slightly higher primary temperatures, about 4°F higher than Unit 2. Other differences were noted in steam and feedwater flow but none of the differences were considered sufficient to significantly affect thermal hydraulic characteristics inside the steam generators. The different analyses included:~~

Description: The NRC conducted a number of different thermal-hydraulic analyses, including:

- Lower bounding thermal hydraulic analysis using the steam generator base design condition, where primary inlet temperature was 598°F, and an upper bound case where primary inlet temperature was 611°F as identified in Mitsubishi Document L5-04GA021, Revision 3
- Varying steam generator pressures from 833 to 942 psia
- Steam mass flow rates from 7.59 to 7.62 Mlbm/hr
- Primary loop volumetric flow rate from 102,000 to 104,000 gpm, and
- Recirculation ratio from 3.2 to 3.5.

~~c. Conclusions~~

~~The team identified one unresolved item associated with SCE's evaluation of the Unit 3 loose parts monitoring alarms.~~

The result of the independent NRC thermal-hydraulic analysis ~~indicated~~concluded that differences in the actual operation between units and/or individual steam generators had an insignificant impact on the results and in fact, the team did not identify any changes in steam velocities or void fractions that could attribute to the differences in tube wear between the units or steam generators. It should be noted that increases in primary temperature and steam generator pressures has the effect of reducing void fractions and peak steam velocities, which slightly decreases the conditions necessary for fluid elastic instability and fluid-induced vibration.

4.0 Design and Manufacturing Differences (Charter Item #4) (Mitsubishi Charter Item 1)

During the development of the charter, it was not known how SCE and Mitsubishi reviewed and approved design and manufacturing changes. During the inspection, it was identified that all design and manufacturing changes proposed by Mitsubishi

required review and approval from a SCE representative. Based on this, it was determined that this area could be covered as one item.

a. Inspection Scope

The team interviewed licensee and Mitsubishi personnel involved in the design and fabrication of the replacement steam generators and reviewed information including nonconformance reports, design drawings, fabrication procedures, design changes, engineering evaluations, supplier deviation requests, and design specifications to identify conditions affecting quality that resulted in relevant design differences between the replacement steam generators. The team assessed whether these differences could be considered as contributing factors for the cause of the tube-to-tube wear issue in Unit 3. The team also reviewed Engineering Change Packages 800071702 and 800071703 for the Unit 2 and Unit 3 replacement steam generators, respectively, with emphasis on changes made to the design methodology described in the updated final safety analysis report for the original steam generators to verify that the evaluation was performed in accordance with licensee procedures and the provisions of 10CFR 50.59, "Changes, Tests, and Experiments."

b. Observations and Findings

No findings were identified.

The team identified two unresolved items for which additional information is required to determine if performance deficiencies exist or if the issues constitute violations of NRC requirements. The team also identified several observations related to the design, fabrication, and the engineering change package for the Unit 2 and Unit 3 replacement steam generators.

~~(1)~~1) Introduction: The team identified an unresolved item associated with the design of the retainer bars in Unit 2 and Unit 3 replacement steam generators.

Description: In February 2012, the licensee identified wear indications in Unit 2 replacement steam generators at the tube locations in contact with the retainer bars (see figure below). Some of the indications showed excessive wear with a maximum degradation of 90 percent through wall.

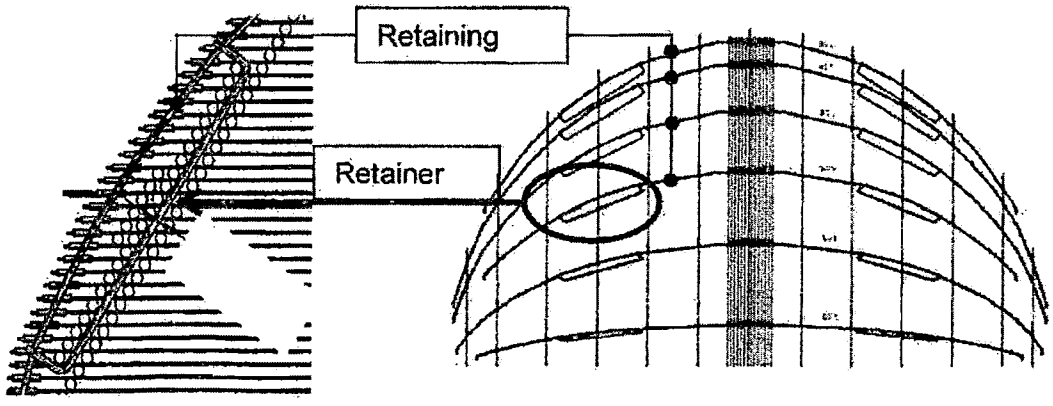

Retainer Bar Design and Location of Affected Tubes (For Illustration Purposes Only)

The team identified that the design of the replacement steam generators did not expect any potential vibration concerns in the area of the tube bundle where the retainer bars were located. The basis for Mitsubishi's design philosophy relied on the following factors:

- Based on the calculated natural frequency of the retainer bar, Mitsubishi considered that there would not be a resonant vibration condition relative to the flow conditions in the location of retainer bars.
- The vibration analysis of the tube bundle only considered out-of-plane vibration because in-plane vibration was not expected to be an operational concern for the retainer bars.
- The outermost tubes were considered the least susceptible to flow-elastic instability; therefore retainer bar locations were not included in the vibration analysis.
- Fluid-elastic instability was found not applicable to the retainer bar because this mechanism did not apply to a single tube in cross flow.
- Vortex-induced vibration was found not applicable to the retainer bar because it was considered a vibration mode applicable to a single cylinder in uniform cross flow in a large area and the flow condition around the retainer bars was considered slug-froth two phase flow.

However, upon identification of retainer bar-to-tube wear in Unit 2 replacement steam generators, Mitsubishi performed an evaluation to identify the cause of excessive wear. The analysis considered three vibration mechanisms: fluid-elastic instability, vortex-induced vibration, and turbulence-induced vibration (random vibration). The analysis for turbulence-induced vibration determined that random vibration was the possible cause of the retainer vibration, based on the peculiar flow around the retainer bar, combined with the rather low natural frequency of the retainer bar. The analysis used the two phase flow conditions around the retainer bars and identified various modes of vibration at those flow conditions that could lead to retainer bar vibration and consequently to tube wear.

Additional review by the NRC is required following completion of the ~~Mitsubishi's~~licensee's cause evaluation to determine whether this issue represents a performance deficiency or constitutes a violation of NRC requirements. This issue is identified as URI 05000362/2012007-03, "Evaluation of Retainer Bars Vibration during the Original Design of the Replacement Steam Generators."

~~(2)~~2) Introduction: The team identified an unresolved item associated with the dimensional controls of critical dimensions throughout the fabrication of Unit 2 and Unit 3 replacement steam generators.

Description: Based on the information gathered by the team on the differences in dimensional controls of critical parameters in Unit 2 and Unit 3 replacement steam

generators, the team determined that Mitsubishi did not consider the potential impact of improving dimensional controls for tube roundness and anti-vibration bars on the final tube bundle clearances at normal operating conditions.

Additional review by the NRC is required following completion of ~~Mitsubishi's~~the licensee's cause evaluation to fully assess how the dimensional controls contributed to the tube-to-tube wear in Unit 3 and then determine whether this issue represents a performance deficiency or constitutes a violation of NRC requirements. This issue is identified as URI 05000362/2012007-04, "Evaluation of Changes in Dimensional Controls during the Fabrication of Unit 2 and Unit 3 Replacement Steam Generators."

~~(3)~~3) Design Differences: The team did not identify any significant differences in the design requirements of Unit 2 and Unit 3 replacement steam generators. The "Conformed Specification for Design and Fabrication of the Replacement Steam Generators," also known as the design specification, contained identical technical requirements for Unit 2 and Unit 3 steam generators. All replacement steam generators were required to be designed, fabricated, and tested in accordance with the ~~1998~~20?? edition of the American Society of Mechanical Engineers (ASME) Boiler and Pressure Vessel Code~~, with the 2000 Addenda~~, industry standards, and NRC endorsed methods described in applicable regulatory guides. The licensee specified the same licensing requirements for all replacement steam generators.

The design specification also contained provisions to address technical or quality deviations from the requirements of the purchase order or the design specifications, including the disposition of "Repair" or "Accept as-is" conditions captured as non-conformance reports in Mitsubishi's quality assurance program and changes to documents previously approved by the licensee. This process was referred to as "Supplier Deviation Request" and allowed the licensee to review and approve deviations from the approved design specifications. The team noted that changes affecting the specified design were submitted to SCE personnel for review and approval.

The team noted that the design specification established identical provisions for the design of the replacement steam generator components including the vessel, upper/lower shell, transition cone, tubesheet, channel head, divider plate, tube supports, tubing, steam nozzle, feedwater nozzle, primary nozzles, steam flow limiting device, moisture separators/dryers, feedwater distribution system, blowdown and sludge management, access/inspection ports, instrument/sampling taps, and loose part monitoring.

The design specification also established identical requirements for the service life and service environmental conditions of the replacement steam generators. The licensee also specified identical design loading, structural, and seismic requirements for all replacement steam generators. The design specification contained identical requirements for design transients under normal, upset, emergency, faulted, and test conditions.

Additionally, the performance requirements in the design specification were identical for each replacement steam generator, which included:

- Water Level Stability
- Circulation Ratio
- Moisture Carryover
- Steam Carryunder in the Downcomer Annulus
- Reactor Coolant Flow Rate
- Primary-To-Secondary Leakage
- Blowdown Capacity
- Thermal Rating
- Heat Transfer Surface Area
- Tube Plugging Margin
- Fouling Factor
- Overall Heat Transfer Coefficient
- Primary Side Design and Operating Pressure/Temperatures
- Secondary Side Design and Operating Pressures/Temperatures
- Primary Side Design and Operating Flows
- Secondary Side Design and Operating Flows
- Tube Material and Dimensions

The replacement steam generator design developed by Mitsubishi for SONGS Unit 2 and Unit 3 in accordance with the licensee's design specification was translated into the same set of design and fabrication drawings. The team noted that some as-built dimensions varied between Unit 2 and Unit 3 steam generators as a result of the divider plate weld repairs in Unit 3 and other manufacturing processes. However, these dimensional changes did not represent significant deviations from the original design specifications. Therefore, the team determined that no significant differences existed in the design requirements of Unit 2 and Unit 3 replacement steam generators.

~~(4)~~4) Fabrication Differences: The team noted that the design specification contained the same general fabrication requirements for the Unit 2 and Unit 3 replacement steam generators. The design specification contained the methods required for fabrication, assembly, inspection, and testing of the replacement steam generators. The specification covered, in part, fabrication requirements for the channel head cladding, tube dimensions, tube wall thickness, tube bend radius, tube "ovality," tubesheet, tube-to-tubesheet joints, tube supports, tube bundle, machined gasketed surfaces, non-ASME steam generator internals, welding methods, post-weld heat treatment, and allowable welding materials. The specification also contained detailed requirements for inspections, tests, and examinations, which included examination methods and personnel qualification requirements.

The design specification also required the use of "Supplier Deviation Requests" to address technical or quality deviations from the requirements of the Purchase Order or the design specifications, including the disposition of "Repair" or "Accept as-is" conditions identified during the fabrication process and changes to fabrication documents previously approved by the licensee. The team noted that fabrication

issues affecting the specified design were submitted to SCE personnel for review and approval.

Based on discussions with SCE and Mitsubishi personnel and the review of documentation about the fabrication history of Unit 2 and Unit 3 replacement steam generators, the team identified the differences listed below. At the conclusion of the onsite portion of this inspection, the differences between Unit 2 and Unit 3 steam generators as a result of the fabrication process were under consideration for the cause evaluation.

- Steam Dryer Assembly – During the fabrication of Unit 2 steam generator 2E0-89, Mitsubishi identified a nonconforming condition of the steam dryer assembly that included damaged locking plates of vane jacking devices, displaced bolts, and damaged vanes. The cause of this issue was determined to be inadequate evaluation and control of the design ~~within~~ regard ~~to~~ the capacity of the vane jacking devices to sustain all fabrication conditions. Specifically, the vane jacking devices failed to stay in the design position during multiple rotations of the steam generator assembly during fabrication. Mitsubishi corrected the condition, in part, by replacing all vane jacking devices and damaged vanes with a new design, which was also used in the fabrication of the Unit 2 steam generator 2E0-88, and Unit 3 steam generators 3E0-89 and 3E0-88. Additionally, Mitsubishi modified the assembly sequence of the steam dryers. For Unit 2 steam generator 2E0-89, the steam dryer vanes were assembled in-situ while the steam dryers for Unit 2 steam generator 2E0-88 and Unit 3 steam generators 3E0-88 and 3E0-89 were preassembled before installation in their final position.

- Drilling of Tubesheet Holes – The tubesheet holes in Unit 2 and Unit 3 steam generators where the tubes are inserted for final assembly were made with different drill bits. The Unit 2 steam generator tubesheets were drilled with uncoated drill bits. The Unit 3 steam generator tubesheets were drilled with titanium-nitride coated drill bits, which improved the drill bit life and resolved tooling mark issues experienced in Unit 2.

- Transition Wrapper Welding – The welding of the transition wrapper was performed in different order for each unit. For Unit 2 steam generators, the transition wrapper was welded after the tubes and anti-vibration bars were installed. In Unit 3 steam generators, the transition wrapper was welded before the installation of tubes and anti-vibration bars.

- Cladding Removal Process for the Channel Head – The removal of the stainless steel clad weld from the interior surface of the channel head base metal in preparation for the divider plate weld (i.e. structural butter weld) was performed with different methods in Unit 2 and Unit 3 replacement steam generators. For Unit 2, Mitsubishi used a machining process to remove the cladding in both steam generators. In Unit 3, Mitsubishi used an air carbon-arc gouging process. This method resulted in separation of the butter weld during hydrostatic testing. The root cause evaluation concluded that the air carbon-arc gouging process left

carbon deposits on the base metal. Gouging was followed by grinding which was designed to remove the heat affected zone and expected to completely remove the carbon deposits. However, the grinding process left carbon deposits behind, which resulted in the localized areas of high carbon and high base metal hardness due to carburization. The repair of the Unit 3 divider plate welds is addressed in further details in Section 12.0 of this report.

- Helium Leak Test – As part of the fabrication process, Mitsubishi performed a Helium-Nitrogen leak test on the secondary side of the replacement steam generators to check for leaks on the tube-to-tubesheet welds. For all steam generators, this test was performed after completion of the tube-to-tubesheet weld, but prior to the penetrant examination of the tube-to-tubesheet welds and final tube expansion. The leak tests for Unit 2 steam generators were performed at a higher pressure than Unit 3 steam generators. Additionally, the Unit 2 tests were performed using a temporary welded cap on top of the steam generator shell to enclose the secondary side, while a temporary clamped cap was used in Unit 3 steam generators. All tests required the same holding time before starting the test and the same leak rate acceptance criteria.

- Preliminary and ASME Section III Hydrostatic Tests – The number of hydrostatic tests performed in accordance with ASME Section III on the primary and secondary sides of the replacement steam generators varied between Units due to the results of the initial test in each steam generator. For each replacement steam generator, the hydrostatic tests were performed first on the primary side and then on the secondary side. Both Unit 2 steam generators met the acceptance criteria in the first hydrostatic test. However, during the first hydrostatic test on the secondary side of Unit 3 steam generator 3E0-89, Mitsubishi identified leakage through a tube-to-tubesheet weld that exceeded the ASME Code acceptance criteria. After repairs were completed to address the leakage, the hydrostatic tests were re-performed. Following the second set of hydrostatic tests on Unit 3 steam generator 3E0-89, cracking indications were identified in the divider plate-to-channel head weld. After repairs were completed to address the divider plate weld cracks, a third set of hydrostatic tests were performed in Unit 3 steam generator 3E0-89. Since similar cracking indications of the divider plate weld were identified in Unit 3 steam generator 3E0-88, a second set of hydrostatic tests was performed in this steam generator after the divider plate weld was repaired.

  Additionally, prior to each ASME Section III hydrostatic test, Mitsubishi performed a preliminary hydrostatic test of the primary and secondary side of the steam generators at design pressure to check for leakage at the feed pump, pressure filling line, temporary gaskets, and temporary seals. Therefore, each replacement steam generator received an equal number of preliminary and ASME Section III Hydrostatic Tests. The total numbers of hydrostatic tests for each steam generator are summarized below.

| **Number of Preliminary and ASME Section III Hydrostatic Tests** |
|---|

| Steam Generator | Primary Side | Secondary Side | Results |
|---|---|---|---|
| 2E0-89 | 1 | 1 | Acceptance criteria met |
| 2E0-88 | 1 | 1 | Acceptance criteria met |
| 3E0-89 | 1 | 1 | Leakage detected in tube-to-tubesheet weld |
| | 1 | 1 | Divider plate weld separation weld identified |
| | 1 | 1 | Final – Acceptance criteria met |
| 3E0-88 | 1 | 1 | Divider plate weld separation weld identified |
| | 1 | 1 | Final – Acceptance criteria met |

- Pre-Service Inspection – The design specification established similar requirements for the pre-service eddy current examination of Unit 2 and Unit 3 replacement steam generators. The team noted that the eddy current examinations of Unit 2 and Unit 3 steam generators were performed with similar eddy current techniques, including essential variables. However, the circumstances in which the examinations were performed varied for each Unit. For Unit 2, the pre-service examination was performed after the steam generators were delivered at the SONGS jobsite. The steam generators were examined on the shipping saddles, where the position of the tube bundle was at 45 degrees from the gravity neutral position. This position was dictated by the location of the steam generator lifting trunnions which were installed on the upper shell at 45 degree orientation from the steam generator centerline. For Unit 3, the pre-service eddy current examination was performed at the Mitsubishi Kobe facility while the steam generators were still on the fabrication rollers and in the gravity neutral position (i.e. divider plate oriented horizontally). The decision to perform the Unit 3 pre-service examination at the Mitsubishi facility was dictated by delivery schedule considerations resulting from the divider plate weld repairs.

- Flow Limiter for Primary Inlet Nozzles – The replacement steam generators were designed with a flow limiter located in the primary inlet nozzle (see figure below) in order to make the reactor coolant system flow similar to the flow rate of the original steam generator and not exceed the maximum allowable reactor coolant system flow rate. The licensee's evaluation for the engineering design package determined that although the original steam generators had a number of plugged tubes, the reactor coolant system flow rate of the original steam generators was near the design requirement. Because the replacement steam generators has 377 more tubes than the original steam generators, and contained tubes with u-bends versus "square bends", the pressure drop of the replacement steam generators with no plugged tubes would be much less than the original steam generators resulting in a higher flowrate.

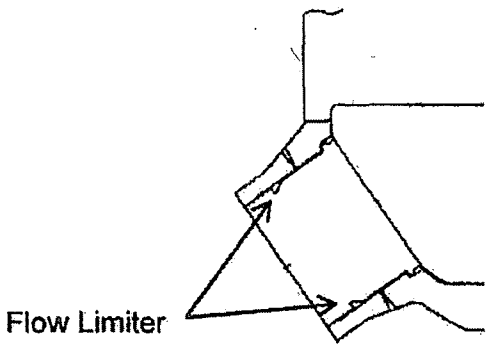


Replacement Steam Generator Primary Inlet Nozzle (For Illustration Purposes Only)

The flow limiter was designed to ensure the total "best estimate" reactor coolant flow rate with the replacement steam generators installed would not exceed 106.5 percent of the design volumetric flow rate of 396,000 gallons per minute at a reactor coolant system cold leg temperature of Tcold = 540.9°F. For Unit 2 replacement steam generators, the flow limiter diameter to nozzle inner diameter ratio was 0.94 while the ratio for Unit 3 steam generators was 0.915 due to Unit ~~3~~2 reactor coolant pump replacement. The flow limiter dimensions resulted from a scaled model test performed by Mitsubishi and it was designed to be machined as part of the nozzle base metal.

- Pitch Distance of Tube Support Plate Drilled Holes in Unit 2 Steam Generator 2E0-89 – During fabrication of the tube support plates for Unit 2 steam generator 2E0-89, quality control inspections identified unacceptable measurements of the pitch distance between drilled holes. Mitsubishi fabrication procedures required verification of the total center-to-center distance between ten inline drilled holes at certain sample points of the tube support plate. The dimensional verification checks identified a total of 200 measurements in tube support plate number 3 and 10 measurements in tube support plate number 6 that did not meet the dimensional acceptance criteria established in the fabrication procedures. Mitsubishi evaluated this non-conformance condition and accepted the condition "as-is" with the SCE's approval. The technical justification for accepting the condition addressed four elements: (a) the impact of the condition on the ability to insert the tubes through the affected areas of the tube support plates, (b) resulting stress on the tubes after insertion, (c) impact of the condition on the tube to anti-vibration gap size, and (d) possible occurrence of tube scratch during inspection. Similar unacceptable measurements were not identified in Unit 2 replacement steam generator 2E0-88 or Unit 3 replacement steam generators 3E0-89 and 3E0-88.

- Tube-to-Tube Clearance in Unit 2 steam generator 2E0-89 – During fabrication of Unit 2 replacement steam generator 2E0-89, interference checks identified that the clearance between the tubes in Rows No. 28 and 30 in Column No. 22 was less than the minimum clearance of 0.13-inch specified in Mitsubishi's inspection procedure. The condition was accepted "as-is" by Mitsubishi and SCE through the supplier deviation request process. The main considerations of the technical

evaluation included: (a) thermal expansion difference, (b) tube expansion due to operating pressures, (c) tube displacement due to out-of-plane flow induced vibration, and (d) tube displacement due to seismic acceleration. The team noted that no tube-to-tube wear indications were identified in this area of the tube bundle.

- Anti-Vibration Bar Spacing Issues in Unit 2 Steam Generator 2E0-89 – During fabrication of Unit 2 replacement steam generator 2E0-89, quality control inspections identified unacceptable gaps between tubes and the anti-vibration bars in the outside tube columns. The affected area was identified as welding zone-4. The apparent cause for the anti-vibration bar spacing issue was due to performing the welding of zone-4 while the steam generator was oriented horizontally with this welding zone oriented to the bottom of the bundle. In this configuration, the tube bundle experienced sagging at the time of welding due to gravity. After completion of welding zone 4, the steam generator assembly was rotated 180 degrees for additional assembly steps, but the sagging in the opposite direction caused enlargement of the gaps in welding zone 4 and this enlargement remained approximately the same for all subsequent rotations. When zone-4 was rotated 180-degrees after welding, deflection or sagging of the tube retaining bars due to gravity slightly pulled the anti-vibration bars, increasing the gap between the tube and the anti-vibration bars in this zone.

  With the licensee's approval, Mitsubishi implemented various corrective actions to address the condition in the pending Unit 2 replacement steam generator 2E0-88 and subsequently in Unit 3 steam generators which included: (a) use of smaller spacer blocks between tubes for the installation of anti-vibration bars, (b) re-define the welding zones to limit welding in the horizontal position, and (c) reduce rotations during welding of the other bundle zones. Mitsubishi performed rework activities in Unit 2 steam generator 2E0-89 to restore anti-vibration bar spacing to design specifications. These activities resulted in better gap distribution. All the tube-to-anti-vibration bar gaps exceeding the initial dimensional criteria were further evaluated and accepted in accordance with Mitsubishi's gap size evaluation procedure.

- Rotations of Steam Generator Assembly for Anti-Vibration Bar Installation and Welding – The team noted that welding of anti-vibration bars structure required rotating the steam generators several times. As a result of the corrective actions generated to address the anti-vibration bar spacing issues in Unit 2 steam generator 2E0-89, the installation procedure was revised to reduce the number of rotations for anti-vibration bar installation to attain better gap control. This procedure revision resulted in different number of rotations in each replacement steam generator. Steam generators Unit 2 E0-89, Unit 2 E0-88, Unit 3 E0-89, and Unit 3 E0-88 received 11.25, 4, 3.5, and 3.5 rotations, respectively, during installation of the anti-vibration bars structure.

- Temporary Installation of Plastic Ties – In order to limit the displacement of anti-vibration bars during rotation of the steam generator assembly for welding of the anti-vibration bars structure, Mitsubishi revised the installation procedure to install temporary plastic ties between the retaining bars and the tubes. This step

of the anti-vibration bar assembly process was performed in a different sequence for Unit 2 and Unit 3 steam generators. For Unit 2, the installation of plastic ties occurred after welding the transition wrapper, the Helium leak test, and tube hydraulic expansion, but before welding the channel head to the tubesheet, the hydrostatic tests, and the pre-service inspection. In Unit 3, the installation of plastic ties was performed between welding the transition wrapper and the Helium leak test.

- Dimensional Controls of Anti-Vibration Bar Structure – According to Mitsubishi's preliminary cause evaluation taking place at the time of this inspection, the controls of critical dimensions affecting the clearances between the tube and the anti-vibration bars were gradually improved throughout the fabrication of the Unit 2 and Unit 3 steam generators. This improvement on dimensional controls was a consideration for the determination of the failure mechanism leading to tube-to-tube wear in Unit 3.

  The first dimensional control under consideration was the improvement of tube roundness in the section of the tubes that was bent to form the U-bend shape. During fabrication of Unit 2 steam generator 2E0-89, the supplier of tubular product for Mitsubishi (i.e. Sumitomo), experienced quality issues to meet the G-values established in the design specifications, resulting in a high number of tube rejections. The G-value was a measure of departure from roundness, or "ovality," after the tubes were bent and it was controlled in order to control the gap between tubes and anti-vibration bars (see figure below). The G-values were measured at different locations along the U-bend section of the tubes for a selected number of tubes per row, as established in Mitsubishi's procedure. The acceptance criteria for G-value varied depending on the row where the tubes were installed. The acceptance criteria also remained the same throughout the fabrication of Unit 2 and Unit 3 replacement steam generators.

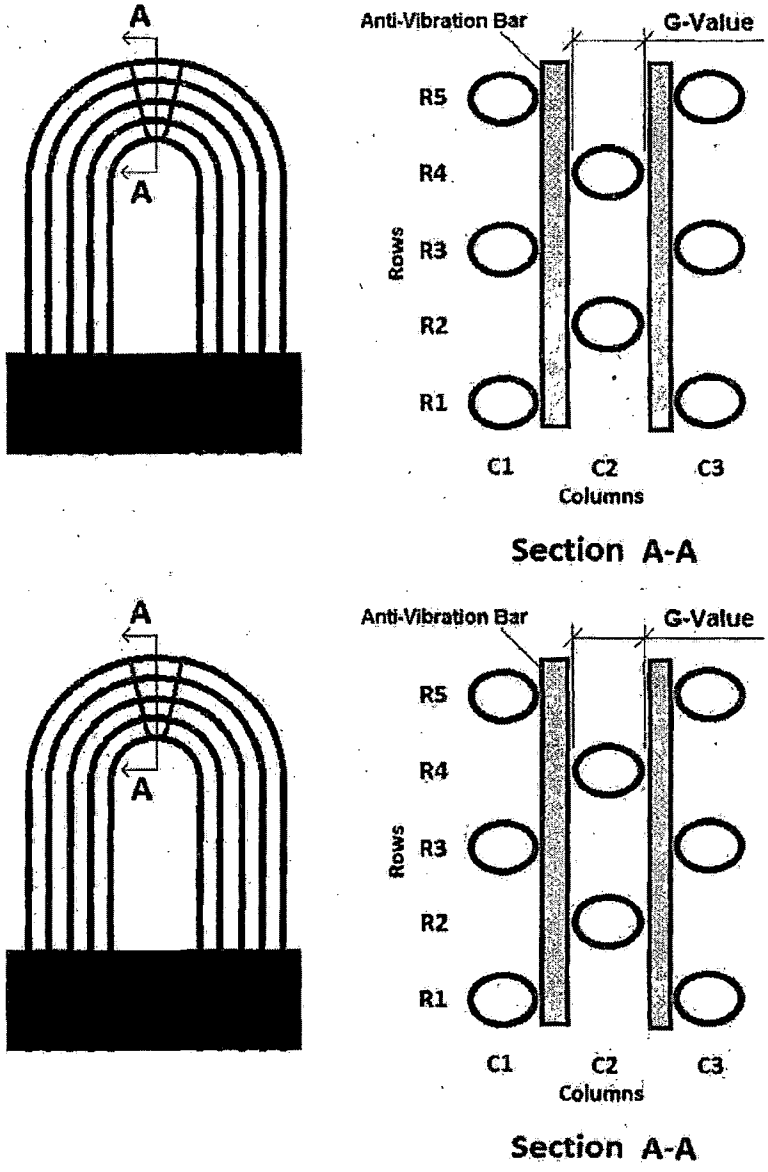


Description of G-Value Parameter (Conceptual Drawing – For Illustration Purposes Only)

Based on discussions with licensee personnel and documentation reviews, the team noted that Sumitomo implemented measures to improve the quality of the tube bending process which resulted in less deviation of G-values and a reduction in the amount and variability of tubing "ovality." Based on the statistical analysis of G-value data collected during fabrication of the Unit 2 and Unit 3 steam generators, Mitsubishi concluded that the G-values ~~standard deviation~~ gradually decreased since the fabrication of the first steam generator.

Another dimensional control under consideration was the variability of anti-vibration bar dimensions. Mitsubishi's fabrication procedures required inspection of various dimensions of the anti-vibration bars to control the gap between the

anti-vibration bars and the tubes. These dimensions were: thickness in the straight sections, twisting and flatness of the straight sections after bending, and thickness of the anti-vibration bar tip (i.e. nose) after bending. Among these dimensions, the twisting and flatness of the straight sections after bending were verified using a "Go or No-Go" approach based on the acceptance criteria in Mitsubishi's procedures but no specific measurements were required to be maintained by procedure. Additionally, the acceptance criteria for anti-vibration bar dimensions remained the same throughout the fabrication of Unit 2 and Unit 3 replacement steam generators. Mitsubishi conducted [C1]a preliminary statistical analysis of the available dimensional data for anti-vibration bars and the team concurred that there were minor differences in the statistical distribution of these dimensions in Unit 2 and Unit 3 steam generators.

Engineering Change Package (10 CFR 50.59): The team determined that the licensee's evaluation for changes in the updated final safety analysis report's design methodologies for the replacement steam generators was consistent with SONGS procedures for the implementation of 10 CFR 50.59 requirements. The licensee's evaluation contained in Engineering Change Packages 800071702 and 800071703 for the Unit 2 and Unit 3 replacement steam generators, respectively, determined that the replacement of the original steam generators did not affect the current licensing basis to the extent of needing prior approval from the NRC as required by 10 CFR 50.59.

In the 50.59 screening evaluation associated with the engineering change package for the Unit 2 and Unit 3 replacement steam generators, the licensee determined that the proposed activity did not adversely affect a design function, or the method of performing or controlling a design function described in the updated final safety analysis report. The licensee also determined that the steam generator replacement activity did not change a procedure in a manner that adversely affected how an updated final safety analysis report design function is performed or controlled. Additionally, the licensee determined that the steam generator replacement activity did not involve a test or experiment not described in the updated final safety analysis report. The licensee evaluated the following updated final safety analysis report design functions in the 50.59 screening:

- Steam Generator Design Functions
- Reactor Coolant System Structural Integrity
- Emergency Core Cooling System Performance
- Non-Loss of Coolant Accident Transients
- Containment Pressure-Temperature Analysis
- Low Temperature Overpressure Protection
- Reactor Protection System, Engineered Safety Features Actuation System, Core Operating Limit Supervisory System, and Core Protection Calculations
- Nuclear Steam Supply System Performance
- Non-Safety Related Control Systems Performance

However, the 50.59 screening evaluation identified three methods of analysis described in the updated final safety analysis report that were affected by the

proposed steam generator replacement and required further evaluation against the criteria in 10 CFR 50.59. The affected methodologies are described below:

- Seismic Analysis of Reactor Vessel Internals – The original analysis of SONGS Unit 2 and Unit 3 reactor vessel internals with the original steam generators was performed with the methodology described in Combustion Engineering Topical Report CENPD-178, "Structural Analysis of Fuel Assemblies for Combined Seismic and Loss of Coolant Accident." Subsequent to the submittal of this report, Combustion Engineering revised the methodology by modifying modeling techniques, computer codes, testing methods, and acceptance criteria in response to changes in licensing requirements. Consequently, the original report was resubmitted to the NRC as CENPD-178-P, Revision 1-P, August 1981. This revision was approved by the NRC in a Letter from H. Bernard to A. Scherer, "Acceptance for Referring of Licensing Topical Report CENPD-178," dated August 6, 1982. The licensee used this revised methodology for the replacement steam generators and considered it as a methodology approved by the NRC for the intended application.

- Reactor Coolant System Structural Integrity – The structural analysis of the original steam generators used ANSYS software for the thermal and stress analyses while the replacement steam generators were analyzed using ABAQUS software. ANSYS was described in the updated final safety analysis report as a large-scale, general-purpose, finite element program for linear and nonlinear structural and thermal analysis of the reactor coolant loop components. The licensee considered ABAQUS to be similar to ANSYS. The licensee compared both programs using thermal and stress sample problems. The comparison demonstrated that the results varied from theoretical solutions by no more than 1 percent, and ABAQUS and ANSYS results themselves were also within 1 percent of each other. The variability of results was determined to be within the margin of error for the subject type of analysis.

- Tube Wall Thinning Analysis – The original steam generator analysis used CEFLASH computer program for the main steam line break mass-energy blowdown analysis, whereas the replacement steam generator analysis used manual calculations to represent the main steam line break blowdown loads by applying the maximum possible tube differential pressure, which bounded the pressure calculated by CEFLASH.

  For loss of coolant accident analysis, the original steam generator used STRUDL computer program to calculate displacement histories and then ANSYS computer program to calculate tube stresses. The tube stresses for the replacement steam generators were determined using ANSYS computer program based on the blowdown forces. For the original steam generators the combination of loads analyzed was primary loop pipe break plus design basis earthquake and main steam line break plus design basis earthquake. For the replacement steam generators, the loss of coolant accident, design basis earthquake, and the main steam line break events were combined as one limiting event, which SCE considered to be a more conservative method of evaluation relative to the original steam generators. The licensee determined that the results of the tube

wall thinning analysis for the replacement steam generators were conservative or essentially the same and the methodology used did not represent a departure from a method of evaluation described in the updated final safety analysis report.

Further discussion is contained in Section 13.0 of this report on the methodology used by the licensee for the reactor coolant system structural integrity and tube wall thinning analysis.

The team noted that a key methodology for the design of the original and replacement steam generators was the thermal-hydraulic code used to model the flow conditions in the steam generators. ~~Mitsubishi's FIT-III thermal-hydraulic~~ The original steam generators were designed using ATHOS thermal-hydraulic code while the replacement steam generators were designed with a proprietary code from Mitsubishi (Need to verify this with Joel. Think the generators were designed before ATHOS was developed in 1985). Mitsubishi's code was accepted by SCE for the design of the replacement steam generators. The team noted that the updated final safety analysis report did not specifically describe ATHOS as the ~~thermal-hydraulic~~ code used for the design of the original steam generators and therefore the ~~use of the FIT-III~~change in thermal-hydraulic code did not constitute a change in methodology or a change in an element of a methodology described in the updated final safety analysis report. The updated final safety analysis report did describe the computer code CRIB as the code used to analyze overall steam generator performance. As described in the updated final safety analysis report, CRIB was used to establish the recirculation ratio and fluid mass inventories as a function of power level in the original steam generators.

With regard to the major design changes between the original and replacement steam generators, the updated final safety analysis report did not specify how the original steam generators relied on special design features such as the stay cylinder, tubesheet, tube support plates, or the shape of the tubes to perform the intended safety functions. The description of the original steam generators was focused on the overall thermal performance characteristics and the applicable codes and standards used for fabrication. The updated final safety analysis report provided a brief description of the egg-crate tube support plate design and its function to prevent concentration of impurities in the tube-to-tube support plate gap, which could lead to tube degradation. The updated final safety analysis report also described degradation issues of the egg-crate tube support plate design as a result of flow-accelerated corrosion and the corrective actions taken to mitigate this degradation mechanism.

Regulatory Guide 1.187, "Guidance for Implementation of 10 CFR 50.59, Changes, Tests, and Experiments," November 2000, allows the use of NEI 96-07, "Guidelines for 10 CFR 50.59 Implementation," Revision 1 for methods that are acceptable for complying with 10 CFR 50.59. Per NEI 96-07, changes affecting structures, systems, or components that are not explicitly described in the updated final safety analysis report can have the potential to adversely affect structure, system, or component design functions that are described and thus may require a 10 CFR 50.59 evaluation. Consistent with this guidance, SCE's 50.59 screening evaluated the differences in subcomponents between the original steam generators and

replacement steam generators as to whether the differences adversely affected the design function (reactor coolant pressure boundary) of the steam generators. The replacement steam generators were designed and fabricated in accordance with quality assurance requirements, and 10 CFR 50.59 does not require the licensee to presume deficiencies in the design or fabrication.

~~c. Conclusions~~

~~The team determined that no significant differences existed in the design requirements of Unit 2 and Unit 3 replacement steam generators.~~ Based on the updated final safety analysis report description of the original steam generators, ~~the team determined that the steam generators major design changes were reviewed in accordance~~one unresolved item associated with the ~~10 CFR~~ 50.59 ~~requirements.~~

~~The team~~review was identified ~~two unresolved items:~~

- ~~Evaluation of Retainer Bar Vibration during the Original Design of the Replacement Steam Generators~~
- ~~Evaluation of changes in Dimensional Controls during the Fabrication of Unit 2 and Unit 3 Replacement Steam Generators~~

~~Additionally, an unresolved item related to a change in a method of evaluation used for the stress analysis calculations~~ and is discussed in Section 13.0 of ~~the~~this report.

5.0 Quality Assurance/Quality Control (Charter Item 5) (Mitsubishi Charter Item 4)

The team reviewed numerous documents from both SCE and Mitsubishi (including sub-contractors, such as Sumitomo) associated with the design, fabrication, and manufacturing of the steam generators for both units. The team reviewed SCE and Mitsubishi's quality assurance program, procedures and implementation activities for the control of purchased material, equipment, and services; inspections; procurement document control; and corrective action and nonconformance activities. Specifically, the team reviewed a sample of Mitsubishi nonconformance reports, audit, survey, all SONGS condition action requests, audits, surveillances, stop work orders, and supplier deviation requests associated with the design and manufacturing of the steam generators. The team concluded that these portions of SCE and Mitsubishi's quality assurance program regarding its safety-related activities were appropriately controlled and implemented.

5.1 SONGS Quality Assurance/Quality Control

a. Inspection Scope

The team reviewed SCE's implementation of their quality assurance program to determine if it complied with the requirements of 10 CFR 50, Appendix B, "Quality Assurance Criteria for Nuclear Power Plants and Fuel Reprocessing Plants." The team reviewed SONGS implementing procedures, quality assurance manual, vendor audits, procurement specifications, corrective action requests, and numerous other documents, as well as interviewed a number of quality assurance/control and engineering personnel

to determine the appropriateness of activities affecting quality conducted during fabrication, manufacturing and delivery of the replacement steam generators.

b. Observations and Findings

No findings were identified.

~~(1)~~1) Policies and Procedures for Supplier Selection and Control

The team reviewed Quality Assurance Manual, Section 17.2.7, "Control of Purchased Material and Services," which defines the process used to ensure that purchased material, source material, and subcontracted services conform to applicable codes and standards. Section 17.2.7.2 of the quality assurance manual provided measures for the approval and control of suppliers and describes the methods that SCE uses to conduct technical and quality assurance evaluations of potential suppliers. Specifically, SCE evaluated an audit performed by Dominion (DA 2002-92, "Dominion Audit of Mitsubishi Heavy Industries"). The evaluation was performed and documented in accordance with SONGS policies and implementing procedures that govern the control of purchased material, equipment, and services. The results of SCE Evaluation MHI-01-04, "Evaluation and Review of Contractor, Consultant, Utility or Licensee Audit Report," stated that Mitsubishi was conditionally qualified for the fabrication and design of the replacement steam generators. An audit was performed by SCE when a sufficient quantity of work had been performed to demonstrate implementation of Mitsubishi's quality assurance program. Southern California Edison-'s oversight of Mitsubishi also included verification of Mitsubishi's activities during fabrication, inspections, testing and shipment of the procured item. After approximately 14 months from the initial evaluation SCE removed the conditional qualification based on results from Evaluation MHI-10SV-05, "Source Evaluation Report of MHI," dated February 8, 2006, and MHI-3SV-06, "Source Verification Report of MHI," dated May 3 2006, and implementation and verification of specific corrective actions. Part of the SONGS oversight plan of Mitsubishi included the placement of SCE quality assurance/quality control personnel (residents) at the Mitsubishi facility. Plan SGR-A10183, "Replacement Steam Generator Resident Oversight Plan," described the roles and responsibilities of the resident management, engineering, and quality oversight implementation strategy for the replacement steam generators. This oversight plan was created to provide reasonable assurance that the design, licensing, fabrication, delivery, and acceptance of the SONGS replacement steam generators were performed in accordance with specified SCE, industry, regulatory, and Code requirements. The team noted that after the resident was placed at Mitsubishi, Source Verifications and Surveillances performed by SCE decreased. After the NRC team conducted several interviews with the SCE personnel responsible for oversight of Mitsubishi it was determined that the resident provided adequate oversight of Mitsubishi's activities. Nuclear Oversight Division Project Oversight Quarterly Reports were provided by SCE that demonstrated no decrease in SCE oversight of Mitsubishi. These responsibilities were shifted to the resident at Mitsubishi. During the review of the documentation generated by the resident the NRC team noted that the resident was performing these activities on behalf of SCE.

~~(2)~~2) Purchase Order Review

The team reviewed purchase order 6C294014 from Edison Material Supply LLC, issued September 28, 2004, for the design, fabrication, and delivery of four replacement steam generators for SONGS Units 2 and 3. The procurement order stated that all related work was to be performed in accordance with Specification SO23-617-01, "Specifications for Design and Fabrication of RSG for Units 2 and Unit 3." Specification SO23-617-01 identified the codes, standards, regulations and other documents applicable to the design, fabrication, and delivery of the replacement steam generators. For example Specification SO23-617-01 invoked American Society of Mechanical Engineers Boiler and Pressure Vessel Code, American National Standards, American Society for Testing and Materials Standards, and Electric Power Research Institute Technical Report 016743-V2R1, "Guidelines for PWR Steam Generator Tubing Specifications and Repair," among others.

~~(3)~~3) Supplier Audit and Surveillance Reports

The team reviewed a sample of audits and surveillances performed on Mitsubishi to verify SCE's approval process of Mitsubishi and subcontracted services. The team noted that the audits and annual assessments reviewed were adequately documented and provided evidence of Mitsubishi's compliance with quality assurance requirements. The team also verified that audit reports supported the conclusions made by SCE.

5.2 Mitsubishi Quality Assurance/Quality Control

a. Inspection Scope

The team reviewed Mitsubishi implementation of their quality assurance program to determine if it complied with the requirements of 10 CFR 50, Appendix B, "Quality Assurance Criteria for Nuclear Power Plants and Fuel Reprocessing Plants." The team also reviewed a sample of reports from audits and surveys that Mitsubishi conducted of various subcontractors, such as Sumitomo to determine the adequacy of oversight provided by Mitsubishi activities affecting quality and that contracted activities were implemented in accordance with the Mitsubishi-approved quality assurance program. In addition, the team reviewed Mitsubishi's Approved Suppliers List to verify that vendors listed were qualified according to Mitsubishi's specifications and that the list was maintained current.

b. Observations and Findings

No findings were identified.

~~(1)~~1) Policies and Procedures for Supplier Selection and Control

The team reviewed Mitsubishi Quality Assurance Manual, Section 4, "Procurement Control," of the which defines the process used to ensure that purchased material, source material, and subcontracted services conform to the applicable requirements

of the American Society of Mechanical Engineers Code and to customer procurement documents. Section 4.4 of the Quality Assurance Manual provided measures for the approval and control of suppliers and described the process that Mitsubishi used to conduct surveys or audits, as required. Additionally, Section 4.4 provided guidance for the preparation of purchase specifications and subcontract specifications, including the imposition of regulatory requirements for the American Society of Mechanical Engineers Code, Section III products.

The team reviewed Procedure BUH94-06, "Vendor Evaluation Procedure," which provided guidance on the evaluation of the quality control capability of suppliers by performing surveys, audits and performance evaluations of the supplier quality assurance program. Procedure BUH94-06 provided a detailed description of the entire process to be followed by auditors before, during and after a survey/audit was performed.

No issues were identified.

~~(2)~~2) Supplier Audit and Surveillance Reports

The team reviewed a sample of external audits and surveys to verify Mitsubishi's approval process of Sumitomo Metal Industries, Limited, Steel Tube Works and Sumitomo Metal Industries, Limited, Pipe & Tube Company Wakayama Steel Works. The team noted that the audits and annual assessments reviewed were adequately documented and provided evidence of each company's compliance with quality assurance program requirements. The team also verified that audit checklists were prepared and completed for the audit and contained sufficient objective evidence to support the conclusions made by Mitsubishi.

During the review, the team learned that as a consequence of nonconformance report UHNR-SON-RSG-06N005 related to inadequate lot control during final mill annealing of the tubing, Mitsubishi issued a stop work order to Sumitomo. As part of their process Mitsubishi visited Sumitomo to find the root cause of the nonconformance. After a review of Sumitomo's corrective action, Mitsubishi was able to confirm the adequacy of the corrective actions and preventive actions. Mitsubishi released Stop Work Order UHH-G06A097 imposed on Sumitomo.

On May 8, 2007, Mitsubishi performed Special Audit UHQ-07N004, on Sumitomo, in order to confirm adequacy of activities based on Sumitomo Corrective Action Plan UHCP-07N004. During the audit Mitsubishi found two findings and made one recommendation. Both findings required corrective action from Sumitomo. The Mitsubishi audit indicated that Sumitomo was not able to perform adequate activities for manufacturing heat transfer tubing in accordance with Sumitomo's shop manual. The causes of the deficiencies identified during the audit were a result of Sumitomo's staff failing to follow the shop manual requirements. Because the two findings were related to the stop work order, Mitsubishi did not allow Sumitomo to start manufacturing activities until adequate implementation of corrective actions were confirmed by Mitsubishi. On June 21, 2007, Mitsubishi verified Sumitomo implementation of the corrective actions. During this visit at Sumitomo, Mitsubishi verified the operations involving straight tube fabrication prior to tube bending

operations were performed in accordance with Sumitomo's shop manual. Mitsubishi found that the same type of corrective actions taken by Sumitomo for straight tube fabrication operations applied to tube bending operations. During the review of the implementation of the corrective actions Mitsubishi could not verify acceptability of Sumitomo tube fabrication operations for the tube bending process. Mitsubishi allowed Sumitomo to restart operation only for the straight tube fabrication. On July-13, 2007, Mitsubishi subsequently confirmed the adequacy of Sumitomo corrective actions on tube bending processes. Mitsubishi verified that the bending operations followed the requirement of the Sumitomo' shop manual. On July 17, 2007, Mitsubishi lifted the restrictions imposed on Sumitomo and they were allowed to restart operations.

No issues were identified.

~~(3)~~3) Maintenance of the Approved Supplier List

The team reviewed Mitsubishi Quality Assurance Manual Section 4, "Procurement Control," which defined the controls for the maintenance, distribution, and update of Qualified Vendor List UES-20100006. According to Section 4, the Nuclear Plant Quality Assurance Section had the responsibility for preparing, approving, and distributing the qualified vendor list and any subsequent revisions. In addition, a review by the quality assurance engineer was required prior to final document approval. Mitsubishi was informed of changes to their supplier's quality assurance manuals through procurement requirements imposed on the suppliers on their certificate of qualification as an approved vendor. If the vendor did not maintain their quality assurance program, they were removed from the qualified vendor list. Prior to issuing a Quality Assurance Manual revision, approved vendors were required to send a copy to Mitsubishi for review and approval, after which Mitsubishi updated the qualified vendor list with the latest revision number and date.

No issues were identified.

5.3 Quality Assurance Conclusion

The team concluded that the quality assurance program requirements for quality activities to support the replacement steam generator project were consistent with the requirements of 10 CFR Part 50, Appendix B. The team also concluded that SCE's and Mitsubishi's quality assurance program requirements were appropriately translated into implementing procedures to support the replacement steam generator project.

6.0 Implementation of Steam Generator Industry Information (Charter Item 6) (Mitsubishi Charter Item 3)

a. Inspection Scope

The team reviewed procurement documentation, Mitsubishi design documentation, and the 10 CFR 50.59 review package to assess SCE's and Mitsubishi's consideration and implementation (as appropriate) of operating experience as part of the steam generator replacement project, and in the steam generator tube inspections conducted during the

current outages for SONGS Units 2 and 3. The team interviewed various personnel with respect to operating experience considerations relating to major design changes incorporated into the replacement steam generators. The team reviewed operating experience in NRC generic communications and worldwide plant operating experience that might potentially be relevant to conditions observed at SONGS.

b. Observations and Findings

No findings were identified.

The original steam generators installed throughout the domestic fleet of pressurized water reactors, including SONGS, experienced widespread corrosion of the tubes and tube support plates, stress corrosion cracking of the tubes, and wear at tube supports. These problems led to the replacement of nearly all of the original steam generators, in most cases well before the end of their design lifetime. For SONGS, the design of the replacement steam generators included a number of design changes to correct life limiting problems with the original steam generators, based in part on consideration of SONGS-specific and industry-wide operating experience. This included use of more corrosion resistant materials for the tubing and tube support plates to mitigate corrosion and stress corrosion cracking issues experienced in the past. The licensee's bid specification required that the stay cylinder feature of the original steam generators be eliminated to maximize the number of tubes that could be installed in the replacement steam generators and to mitigate past problems with tube wear at tube supports caused by relatively cool water and high flow velocities in the central part of the tube bundle. Mitsubishi employed a broached trefoil tube support plates instead of the egg crate supports in the original design. In addition to providing for better control of tube to support plate gaps and easier assembly, the broached tube support plates were intended to address past problems with the egg crate supports by providing less line of contact and faster flow between the tubes and support plates, reducing the potential for deposit buildup and corrosion. Mitsubishi selected a u-bend configuration for the upper part of the tube bundle instead of the square bend design of the original steam generators based on its experience that u-bends were easier to fabricate and support and were easier to inspect.

The team's review of Mitsubishi design documentation for the anti-vibration bars indicates that Mitsubishi considered wear in the u-bend region as the most important issue affecting the anti-vibration bar design. Mitsubishi reviewed operating experience regarding wear in the u-bend region of replacement steam generators and trended the experience data as a function of steam generator manufacturer, tube packing arrangements (tube pitch, square versus triangular arrays), and steam generator size. The SONGS steam generators are relatively large, and Mitsubishi acknowledged that this and the tight tube packing geometry could affect wear experience. Mitsubishi stated that the SONGS replacement steam generator were designed to minimize these concerns by providing more support points with shorter spans in the u-bend region along with effective zero gaps between the tubes and anti-vibration bars during steam generator operation. Mitsubishi manufacturing was designed on achieving very small uniform gaps between the tubes and anti-vibration bars during assembly.

Engineering Change Package NECP 800071703 for the replacement steam generators

evaluated industry operating experience as it related to the manufacture and operation of the replacement steam generators. Several of these experiences related to fabrication issues, lack of weld quality, material defects, loose parts, lack of cleanliness, and failure to fully expand tubes in the tubesheet. The licensee found most of these issues to be applicable to the replacement steam generators at SONGS, but that these kinds of issues would be adequately addressed by the supplier's (typically Mitsubishi) augmented quality assurance procedures and continuous quality oversight by the licensee. The licensee also cited augmented receipt inspections, in-process verifications, foreign material exclusion and control, and cleanliness inspections on the part of the supplier or the licensee, as applicable, as addressing these issues.

The licensee addressed industry operating experiences relating to stress corrosion cracking of steam generator tubing by noting that the Alloy 690 thermally treated tubing in the replacement steam generators were expected to be substantially more resistant to stress corrosion cracking than the tubing alloys used in earlier model steam generators. The licensee also addressed experience at another unit which experienced tie rod and consequential tube bow as a result of differential thermal expansion between the tubes and shroud and unexpected interference between some tube support plates. The stay rod (equivalent to tie rods at other unit) and shroud material for the replacement steam generators have been selected to have similar coefficients of thermal expansion which would preclude a similar problem.

Steam Generator Degradation Assessment 51-9176667-001 (prepared by AREVA) supporting steam generator inspections during the current outages for Units 2 and 3 evaluated industry operating experience relating to steam generator in-service inspections. This included operating experience reports, including NRC Information Notice 2010-05, "Management Of Steam Generator Loose Parts And Automated Eddy Current Data Analysis," relating to eddy current test probe issues and data analysis errors. In response to these issues, SCE personnel stated that specific training was given to the data analysts at SONGS on the lessons learned from these experiences and where applicable, appropriate data was included in the SONGS site specific performance demonstration. The licensee also described additional measures that would be taken at SONGS to address these issues. The review also addressed operating experience reports dealing with unexpected tube support indications or lack thereof. In response, SCE stated that indicated anti-vibration bar locations by eddy current will be compared to the anti-vibration bar locations specified in the Mitsubishi design drawings.

Steam Generator Degradation Assessment 51-9176667-001 also addressed numerous operating experience reports involving loose parts and foreign objects in steam generators, including several instances involving resultant damage to steam generator tubing. These reports included NRC Information Notices 2004-10, "Loose Parts in Steam Generators," 2004-16, "Tube Leakage Due to a Fabrication Flaw in a Replacement Steam Generator," and 2004-17, "Loose Part Detection and Computerized Eddy Current Analysis in Steam Generators." Some of these reports dealt with eddy current probes, or pieces of probes, which were left behind as loose parts on the primary side. Most of the operating experience reports related to lose parts and foreign objects on the steam generator secondary side. In response, SCE approach for addressing this issue was through procedure changes and secondary side visual inspections which

included the open tube lane, the entire peripheral annulus, and appropriate visual examination followup on eddy current indications of possible loose parts. The inspection with the exception of the loose parts component was performed, as scheduled, during the current refueling outage for SONGS Unit 2. The inspection for loose parts will be performed at the first scheduled inspection during the next refueling outage. The team noted that possible loose parts indications were not found during the 100 percent eddy current test inspection of the Unit 3 steam generators during the current outage. The team also noted that secondary side visual inspections were performed in the upper bundle area of the Unit 3 steam generators to evaluate the tube-to-retainer bar intersections and in a limited area above the 7th tube support plate.

The NRC staff issued many generic communications relating to steam generator tube integrity issues since the 1980s. The team reviewed these documents and determined that many of these related to the potential for stress corrosion cracking of the tubes which the staff found was not expected to be a concern for the thermally treated Alloy 690 material in the SONGS replacement steam generators by virtue of its greatly enhanced resistance to stress corrosion cracking. Most of the others related to problems encountered with eddy current flaw detection and sizing, the occurrence and detection of loose parts/foreign objects, and monitoring of primary to secondary leakage. The team's review indicated that lessons learned from these NRC generic communication documents had generally been incorporated into industry guideline documents relating to steam generator inspections, monitoring of primary-to-secondary leakage, and other guidelines documents prepared by the Electrical Power Research Institute. This information was incorporated into the licensee's inspection and leakage monitoring guidelines.

The team reviewed NRC generic communications not falling into one of the above categories for potential relevance to SONGS Unit 2 and 3. One of these was NRC Information Notice 2004-16 concerning an operational leakage event at another plant due to damage caused by a packing screw during transport to the steam generator manufacturer. The licensee stated in its steam generator change package that this incident was precluded for SCE by prohibiting the use of screws and nails as fasteners for tubing shipping crates. The licensee also addressed NRC Information Notice 2007 37, "Buildup of Deposits in Steam Generator," concerning fatigue of a low row u-bend at a foreign unit as a result of deposit build up and lack of support for the low row u-bend. Engineering Change Package NECP 800071703 specified that this type of incident was precluded in the replacement steam generators by virtue of anti-vibration bar supports extending to the low row u-bends. Steam Generator Degradation Assessment 51-9176667-001 documented that this type of problem reflected an advanced stage of deposit accumulation that was not anticipated for the foreseeable future in the SONGS replacement steam generators.

~~c. Conclusions~~

~~The team's review indicated that lessons learned from these NRC generic communication documents had generally been incorporated into industry guideline documents relating to steam generator inspections, monitoring of primary-to-secondary leakage, and other guidelines documents prepared by the Electrical Power Research Institute. This information was incorporated into SCE's design specifications, inspection~~

~~and, leakage monitoring guidelines.~~

7.0 Packing, Shipping, Handling, and Receipt Inspection (Charter Item 7)

a. Inspection Scope

The team interviewed licensee personnel involved with the packing, shipping, handling, and receipt inspection of the replacement steam generators. In addition, the team reviewed SCE receipt acceptance criteria to assess if critical attributes were appropriately specified and if the licensee had the ability to assess acceptability of meeting those acceptance criteria. The team reviewed evaluations associated with supplier deviation reports, nuclear notifications and changes to handling specifications. With respect to replacement steam generators the team focused on differences in SONGS shipping, handling, and receipt acceptance between the Unit 2 and 3 steam generators from the manufacturing site in Japan to final installation on site.

b. Observations and Findings

No findings were identified.

The team identified three unresolved items for which additional information is required to determine if performance deficiencies exist or if the issues constitute violations of NRC requirements.

(1) Introduction: The team identified an unresolved item associated with Unit 3 steam generators not shipped in accordance with specification SO23-617-01, "Design and Fabrication of Replacement Steam Generators for ~~Unit 2 and Unit 3," Revision 4~~,Units 2 and 3" (title does not match Documents Reviewed section – please check other titles for your sections) and requirements for handling, storage, and shipping. Specifically, ANSI N45.2-1977, "Quality Assurance Program Requirements for Nuclear Facilities," required a special protective environment for handling, storage, and shipping of the replacement steam generators. However, because of schedule changes, the Unit 3 protective environment which included maintaining a nitrogen pressure and a monitoring plan was altered significantly.

Description: The team evaluated specifications associated with the shipping and handling of the Unit 2 and 3 replacement steam generators. Based on the information evaluated by the team, the steam generators procurement and shipping specifications required monitoring and maintenance of nitrogen atmosphere inside the replacement steam generators during shipment. Supplier Deviation Request SDR 10041870-09091 dated December 1, 2009, documents a request "not to control the positive pressure, the dew point of nitrogen, and the oxygen content on the primary and secondary side of the Unit 3 replacement steam generators to accelerate delivery schedule."

Specification SO23-617-01, "Design and Fabrication of Replacement Steam Generators for Units 2 and 3," Revision 4, Section 3.16.3, specifies the supplier shall be responsible for monitoring and maintaining nitrogen atmosphere inside the steam

generators during their shipping from Mitsubishi to the California port discharge point. The team noted that Unit 3 steam generators did not require, monitoring or control of dew point, oxygen concentration, inside nitrogen pressure. The team could not identify if this was properly evaluated (Reference Section 5 of shipping and handling procedure SO23-617-1-M1350).

Additional review and follow up will be required to review the evaluations and corrective actions associated with the maintaining the Unit 3 replacement steam generators protective environment during shipping and then determine whether this issue represents a performance deficiency or constitutes a violation of NRC requirements. This issue is identified as URI 05000362/2012007-05, "Shipping Requirements not in Accordance to Industry Standards."

(2) Introduction: The team identified an unresolved item associated with the shipping and handling specifications requiring methods of tube bundle support. The team could not determine if this requirement to provide a tube bundle support method was adequately evaluated by SCE.

Description: Based on the information gathered by the team on shipping and handling specifications associated with the Unit 2 and 3 replacement steam generators, the team could not determine that Mitsubishi or SCE adequately considered the potential impact of not providing methods of tube bundle supports as required in ~~Specification~~ SO23-617-01~~,~~, "Design and Fabrication of Replacement Steam Generators for Units 2 and 3." In response to the team questions regarding tube bundle support methods~~,~~ the team was provided with results from Procedure L5-04GA069, "Sagging Measurement Procedure," Revision 7. However the team noted the procedure is considered a non-quality affecting procedure and used for reference only.

Additional review and follow up will be required to review the evaluations associated with the requirements to provide tube bundle support during shipping for the Unit 2 and 3 steam generators and then determine whether this issue represents a performance deficiency or constitutes a violation of NRC requirements. This issue is identified as URI 05000362/2012007-06, "Shipping Requirements not in Accordance to Design and Fabrication Specifications."

(3) Introduction: The team identified an unresolved item associated with evaluation of excessive shipping induced forces of Unit 3 replacement steam generator 3E-088.

Description: The team reviewed the SG shipping accelerometer data reports for both Unit 2 and Unit 3. In addition, the team also reviewed shipping and handling records and identified the following:

- Different transoceanic shipping companies and ships were used (U2: Happy Ranger, U3: Enchanter)
- During the discharge from the ship Unit 3 replacement steam generator 3E0-88 (3B) recorded simultaneous signals on the three attached accelerometers

- Unit 3 steam generator 3E0-88 was the only steam generator to record simultaneous signals on the three attached accelerometers
- Unit 3 steam generators received significantly more accelerometers hits compared to Unit 2

Unit 3 replacement steam generator 3E0-88 accelerometers indicated up to a 1.23 g spike with a simultaneous recording on all three of the attached accelerometers. Mitsubishi provided an evaluation of the forces which showed loads were within allowable stress limits but exceeded stress for an operating basis earthquake. The team was not able to determine if this was properly considered.

Additional review by the NRC is required to fully assess if the shipping forces contributed to the tube-to-tube wear in Unit 3 and then determine whether this issue represents a performance deficiency or constitutes a violation of NRC requirements. This issue is identified as URI 05000362/2012007-07, "Unit 3 Steam Generator ~~3E0-88~~ 3E-088 Stresses Related to Handling."

~~c. Conclusions~~

~~The team identified three unresolved items related to the shipment of Unit 3 steam generators; however, the team did not identify any connection between these shipping changes and the unexpected tube-to-tube wear.~~

~~The unresolved items are :~~

- ~~Shipping Requirements not in accordance with Industry Standards~~
- ~~Shipping Requirements not in accordance with Design and Fabrication Specifications~~
- ~~Unit 3 Steam Generator 3E0-88 Stresses Related to handling~~

8.0 Thermal-hydraulic and Flow Induced Vibration Modeling (Charter Item 8)

a. Inspection Scope

The team conducted and overall review of Mitsubishi thermal-hydraulic design documents and drawings used in the manufacture of the Units 2 and 3 steam generators. The team developed an independent ATHOS model to run simulations for various operating conditions to assess thermal-hydraulic phenomena in the steam generators and assess differences in key parameters based on changing operating conditions. The objective of the modeling was to understand the interactions of the key parameters to compare ATHOS modeling results to the degradation trends found during the eddy current inspections.

~~The team reviewed portions of the vibration modeling. Two~~The team was not able to perform any independent tube vibration analysis because the NRC does not have the associated vibration software programs. However, since two key outputs of the thermal-hydraulic code are inputs to the vibration model, the ATHOS model results for fluid velocity and void fraction were used to predict increases or decreases in vibration forces and amplitude.

b. Observations and Findings

No findings were identified.

The team identified one unresolved item for which additional information is required to determine if a performance deficiency exists or if the issue constitutes a violation of NRC requirements.

(1) Introduction: The team identified an unresolved item associated with the adequacy of Mitsubishi's FIT-III thermal-hydraulic code. The FIT-III code predicted non-conservative low velocity and low void fraction results which were used as inputs to the vibration code FIVATS. These non-conservative thermal-hydraulic results lead Mitsubishi to conclude that margins to instability were significantly larger than they actually were.

Description: Replacement steam generators were designed and manufactured in accordance with SONGS Design Specification SO23-617-~~1 and~~1, "Conformed Specification for Design and Fabrication of Replacement Steam Generators for Unit 2 and Unit 3," Revision 4 and ASME Section III, "Rules for Construction of Nuclear Facility Components". The replacement steam generators had enhanced materials and maintenance.

The tube bundle, comprised of 9727 u-tubes, is supported by a set of seven tube support plates which are maintained and spaced by a network of tie-rods. The ends of the u-tubes were welded onto the tube sheet lower face cladding and were full depth expanded in the tube sheet holes. The u-bends are supported by a set of 6 anti-vibration bars, having a maximum of 12 contact points, in the center of the bundle. For shorter tubes near the periphery, a fewer number of anti-vibration bars are present.

One of the major enhancements of the replacement steam generators was the use of Alloy-690 tubing versus Alloy-600 for corrosion resistance. Alloy-690 has lower heat conductivity so, to achieve ~~the~~ same power, the heat transfer surface area must be increased by at least 10 percent. This required more tubes to be used in the replacement steam generators. The increased number of tubes resulted in a more tightly compacted tube bundle and elimination of the stay cylinder. The increase in the number of tubes could lead to increases in primary reactor coolant flow through the steam generators. Orifices were ~~machined as part of~~installed in the steam generator inlet nozzles to ensure maximum allowed primary system flowrates were not exceeded.

The tube layout indexing or incrementation used in these generators was smaller than other replacement steam generator designs. The tighter indexing results in smaller pitch/diameter ratio in critical regions of the tube bundle u-bends. In addition, it was noted that the anti-vibration bar support structure is not connected to the wrapper for lateral or vertical support; instead the anti-vibration bar system structure is only supported vertically by resting on the tubes.

Other operational and physical comparisons of the replacement steam generators and original steam generators were reviewed by the team and no significant differences were noted.

Additional review by the NRC is required to fully assess the adequacy of Mitsubishi's FIT-III thermal-hydraulic code and then determine whether this issue represents a performance deficiency or constitutes a violation of NRC requirements. This issue is identified as URI 05000362/2012007-08, "Non-Conservative Thermal-Hydraulic Model Results."

~~(2)~~8.1 Thermal ~~Hydraulic and Vibration~~hydraulic Assessments

The replacement steam generators thermal hydraulic operation and responses were based on the steam generator design geometric characteristics and operating parameters of the reactor coolant flow and temperature and the secondary feedwater flow and temperature. Calculations were performed for 0 to 100 percent power, beginning-of-life and end-of-life conditions considering limiting tube plugging and fouling. The important actual operating parameters selected for use in the model were saturation pressure, circulation ratio, steam flowrate, tube and shell side pressure drops, water and steam inventories, and global heat transfer coefficient.

Mitsubishi used the SSPC (Steady State Performance Calculation) code to compute these operational parameters, as described in Mitsubishi Document L5-04GA510, "Thermal and Hydraulic Parametric Calculations," Revision 5. The FIT-III code was used to determine thermal-hydraulic fluid flow conditions, with the results described in Mitsubishi Document L5-04GA521, "3D Thermal and Hydraulic Analysis," Revision 3. The FIVATS code was used to compute tube stability ratios that are used to predict tube vibration, with results described in Mitsubishi Document L5-04GA504 "Evaluation of Tube Vibration," Revision 3. In addition, the ABAQUS code was used compute stress and natural vibration frequency, and a code called IVHET was used for tube wear analysis. The key design code for tube

bundle design and vibration analysis is thermal-hydraulic code FIT-III since it computes the two key parameters (fluid velocity and density[1]) that are the primary contributors to the onset of fluid-elastic instability, which indicates the potential for excessive tube vibration.

The Mitsubishi acceptance criterion for vibration was to avoid fluid-elastic instability of tube spans by keeping the calculated stability ratios less than 1. Mitsubishi used the approach given in the ASME code Section III, Division 1, Appendix N-1330, "Flow-Induced Vibration of Tubes and Tube Banks," to calculate stability ratios and they also avoided natural frequencies of the tubes similar to the reactor coolant pump dynamic frequencies.

Design specific flow induced vibration analysis was performed for select U-bend tubes exposed to the greatest vibration risk, generally those with longest unsupported length under most limiting operating condition (lowest steam pressure, end of life design conditions). The phenomenon of fluid-elastic instability of tubes is characterized by cross-flow velocity (for out-of-plane mode) and normal velocity (for in-plane mode) where the local velocities exceed a critical velocity value (given via Conners' Equation[2]). The parameter of local velocity divided by critical velocity is referred to as stability ratio. The accuracy of calculating fluid-elastic instability is limited based on inputs that are best determined by design-specific mockup test data. Mitsubishi did not perform design-specific mockup tests, but used generally accepted test data, and other data based on Mitsubishi test rigs that were not specific to the SONGS replacement steam generator design.

If operating velocities reach this critical value, vibration amplitudes can increase rapidly and fluid-elastic instability forces can lead to rapid pulsation and damaging of tubes. The U-bend region is most susceptible because (1) the local fluid has a higher void fraction, with high velocities; (2) the fluid flow is in a direction normal to the tube, and (3) the anti-vibration bars are limited in their dampening capability along the plane of the tubes. Traditional design of anti-vibration bar systems have not considered in-plane fluid forces since it was accepted that the rigidity and dampening strength of the tube in this direction was adequate to preclude it. This event at SONGS is the first US operating fleet experience of in-plane fluid-elastic instability, sufficient to cause tube-to-tube contact and wear in the U-bend region.

The team noted that Design Specification SO23-617-1, "Conformed Specification for Design and Fabrication of Replacement Steam Generators for Unit 2 and Unit 3," Revision 4, did not address specific criteria for stability ratio and does not mention fluid-elastic instability. The team did find that the Mitsubishi calculated design values for stability ratios did not exceed 0.5. It is important to note, that each steam generator manufacturer has different design values for maximum stability ratios; therefore there is no standard value. The smaller that the design stability ratio is (has to be less than 1), the more margin to fluid-elastic instability.

---

[1] Void fractions and density are inversely proportional.

[2] Fluidelastic Vibration of Heat Exchanger Tube Arrays, Journal of Mechanical design – Volume 100 – April 1978, H.J. Connors, JR.

Mitsubishi computed the flow-induced vibration status of the steam generators in Document L5-04GA504, "Evaluation of Tube Vibration," Revision 3. The critical flow velocity, Uc, was obtained using the Connors' Equation based on output fluid velocities and densities from their FIT-III thermal-hydraulic model. The critical flow velocity is then calculated based on damping ratio, tube mass, tube outside diameter, averaged local cross flow gap velocity, and fluid density per selected tube. The method is based on formulations given in the ASME code Section III, Division 1, Appendix N-1330, "Fluid Elastic Instability". The ratio of normal-to-tube cross flow gap velocity to this critical velocity defines the "stability ratio".

Steam generator vendors must develop specific methods based on the thermal-hydraulic code selected and experimental data used to determine coefficients in the Conners' Equation for their particular steam generator design. The experimental data used ~~in determining~~justify the ~~coefficients~~methods can be developed from in-house tests or taken from published industry data. Mitsubishi indicated that in their methodology two conservatisms were used in their bundle vibration analysis: (1) FIT-III gap velocities were averaged and multiplied by 1.5 and (2) one of 12 anti-vibration bars contacts were assumed to be inactive. The team noted that in Mitsubishi Document L5-04GA504, "Evaluation of Tube Vibration," Revision 3, the 1.5 multiplier was not an added conservatism but a requirement, needed to match test data results.

The team developed an independent model of the new steam generators using the ATHOS thermal hydraulic code[3]. The calculations were intended to assess operating cycle differences between Units 2 and 3 steam generators and review thermal hydraulic phenomena within the steam generators in order to investigate key parameters and causal factors for the excessive tube wear rates. The NRC ATHOS calculations determined that the differences in primary inlet temperature and steam flow between the units were negligible. NRC ATHOS results indicated high void fractions and high u-bend gap velocities existed in the bundle as compared to Mitsubishi FIT-III analyses used for design.

Mitsubishi provided a comparison of their ATHOS model to their FIT-III model results. The Mitsubishi ATHOS model fluid velocities were ~~approximately~~2.5 to 3 times higher than the FIT-III model velocities with the 1.5 multiplier applied. Other independent code calculations, including an analysis by Westinghouse using their in-house modified version of ATHOS and an analysis by AREVA using their French code CAFCA4 showed similar thermal-hydraulic results (up to 4 times higher velocities than FIT-III) as those computed in the Mitsubishi ATHOS results and the NRC independent ATHOS calculations. Based on these comparisons, it was concluded that the FIT-III code and model results used for design were non-conservative even with the multiplier applied.

---

[3] ~~ATHOS~~ATHOS3/SGAP Version 3.~~1~~.0-S: A Computer Program for Thermal-Hydraulic Analysis of ~~the Thermal-Hydraulics of a~~ Steam ~~Generator, 2008~~

~~[4] R. Veilette, M. J. Pettigrew, N. W. Mureithi, "Fluidelastic Instability of an Array of Tubes Preferentially Flexible in~~Generators, February 2005 **(need to verify this is the version that the ~~Flow Direction Subjected to Two Phase Cross Flow," Trans. ASME, Journal of Pressure Vessel Technology, 128, 148 (2006).~~NRC has a license for use. Did Carl re-run the ATHOS model using newest version and did it change our results?)**

Most of the experimental work in fluid-elastic instability has been carried out for two-phase flow, with an air-water medium. Accepted industry data, as presented by the Mitsubishi, shows that in staggered array bundles (triangular pitch, pitch/diameter =1.33), the onset of tube instability for modern steam generators, such as SONGS steam generators, can start at tube gap velocities above 6 meter/sec (pending effectiveness of the dampening structure)[4]. (please add reference for this statement). The NRC ATHOS model results indicated that there was a substantial localized region in the lower hot side of the u-bends where velocities exceeded 6 m/sec.

The NRC ATHOS calculations were compared to gap velocities computed both with the Mitsubishi ATHOS and the FIT-III models. Since tube R142C88 was the only one common for each of the analyses, it can be used as basis for comparison. The effective peak velocities were as follows:

- NRC ATHOS – 5.2 m/sec
- Mitsubishi ATHOS – 5.6 m/sec
- Mitsubishi FIT-III – 2.5 m/sec

Both the NRC and Mitsubishi ATHOS results were reasonably consistent and strongly suggested that high velocities coupled with high void fraction were primary causal factors in the tube fluid-elastic instability and the excessive wear patterns observed in the Unit 3 steam generators.

The team reviewed the verification and validation of both the Mitsubishi FIT-III thermal-hydraulic and FIVATS tube vibration models as stated in Specification SO23-617-1, Revision 4. The specification required Mitsubishi to design and build the steam generators in accordance with ASME NQA-1, "Quality Assurance Requirements for Nuclear Facility Applications," 1994, Subpart 2.7 "Computer Software" and Mitsubishi's quality assurance program.

The team reviewed Mitsubishi's verification and validation Report KAS-20050201, "FIT-III Code Validation Report," Revision 2. The report concluded the FIT-III code was valid for prediction of velocity and density behavior of two-phase flow under nominal conditions for the secondary side of PWR steam generators.

The team reviewed Mitsubishi's verification and validation Report KAS-20040253, "FIVATS Code Validation and Qualification Report," Revision 3. The FIVATS model was designed to calculate the stability ratios by using the flow velocity and density distributions from the FIT-III model. The FIVATS model primarily used the Conners' Equation, and validation was performed mainly by comparison to hand calculation; however, Mitsubishi used a mock-up test facility with a simple anti-vibration bar structure as part of their validation effort. The report concluded that adequate validation and qualification was performed to show compliance to software requirements and that the code could predict flow-induced vibration.

The team requested additional information as part of the verification and validation of the FIT-III thermal-hydraulic model. Mitsubishi provided several additional reports. One of the reports showed benchmarking comparisons to a French test facility

program called CLOTAIRE in 1986. Another report conducted in 2002, showed comparisons between FIT-III and ATHOS, and concluded that both codes had good correlation with the CLOTAIRE experimental data. Because of the limited information provided, the team could not determine the validity of the benchmarking of FIT-III.

Overall, the team determined that the validation and verification of the FIT-III code did not present overwhelming evidence that this code has been adequately benchmarked. The team did not find any problems with the validation of the FIVATS code.

~~(3)~~8.2 NRC ATHOS Results

Figures 1 through 4 (different view angles of same results) show results, with low $T_{hot}$ and low steam pressure and present a 3D isometric encapsulation of steam qualities (red scale) at and above 0.9 (i.e., void fraction > 0.99) and field velocities at and above 6.0 m/sec (white scale).

The ATHOS model results of high steam quality and steam velocity closely align with the area of concern (tube-to-tube wear) in the Unit 3 replacement steam generators. In Figure 5, the code predicted regions of high void fraction and high steam velocities (vertically located z-axis cut at about 20 inches above the 7$^{th}$ TSP) are superimposed with tube-to-tube wear indications from Unit 3 steam generator 3E0-88.

The tube-to-tube wear indications align with anti-vibration bar wear indication trends; however, the anti-vibration bar wear patterns appear to indicate a more square-like, essentially rectangular behavior that suggests that there may also be a mechanical, fabrication, assembly, and/or material contribution to the tube-to-tube wear degradation.

**Figure 1**

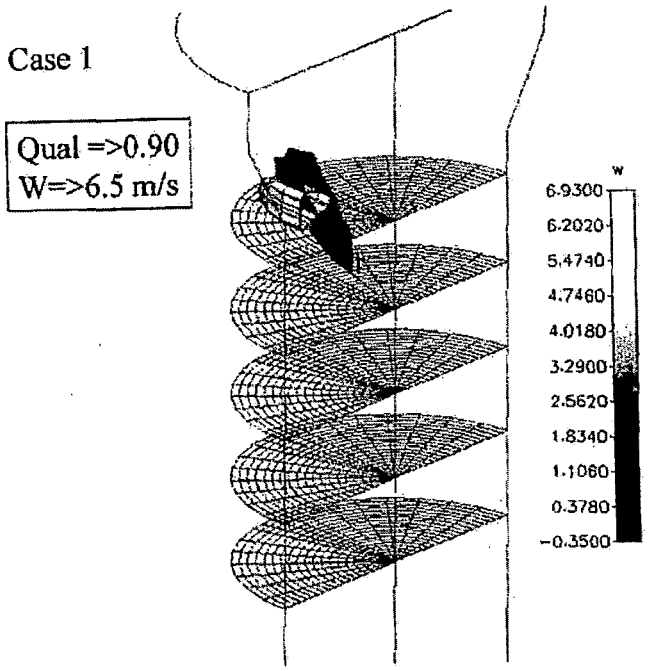
Case 1
Qual =>0.90
W=>6.5 m/s
W
6.9300
6.2020
5.4740
4.7460
4.0180
3.2900
2.5620
1.8340
1.1060
0.3780
-0.3500

**Figure 2**

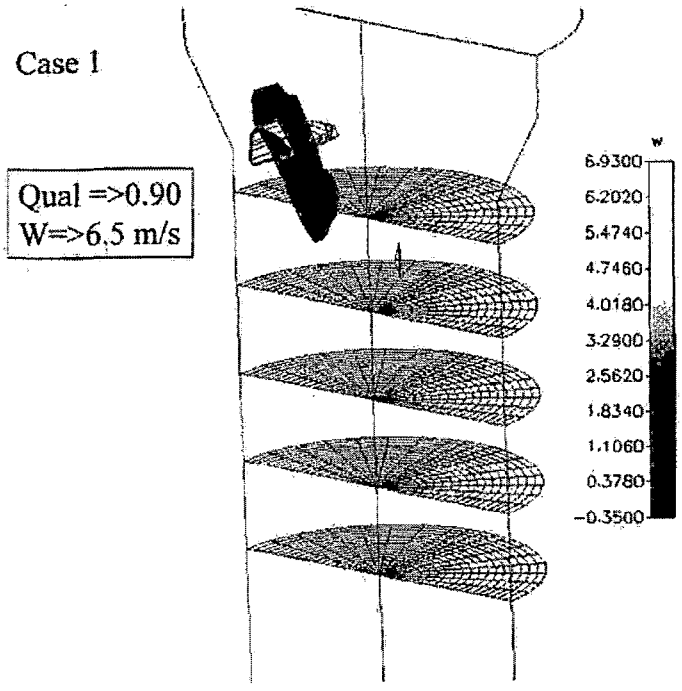


**Figure 3**

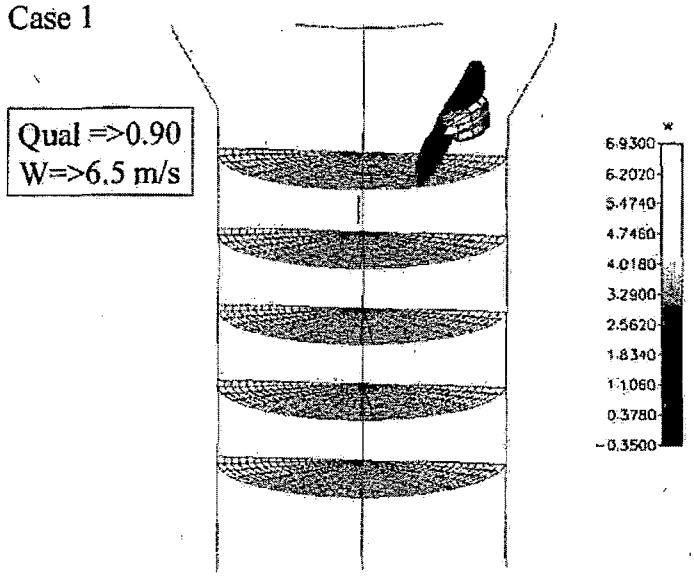

Case 1

Qual =>0.90
W=>6.5 m/s

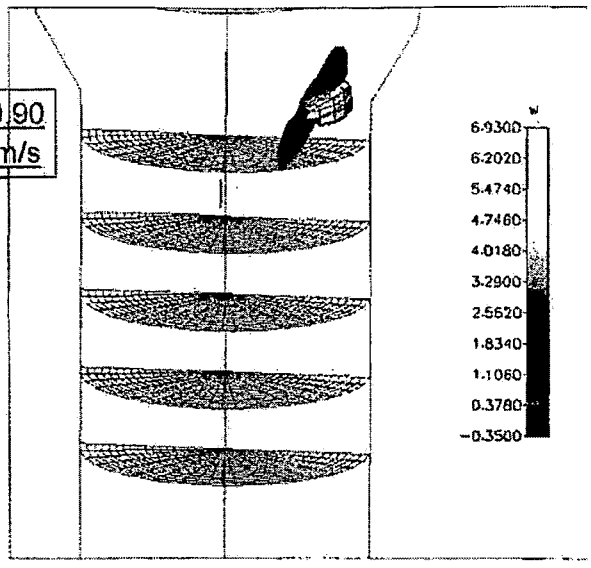


**Figure 4**

Case 1

Qual =>0.90
w=>6.0 m/s

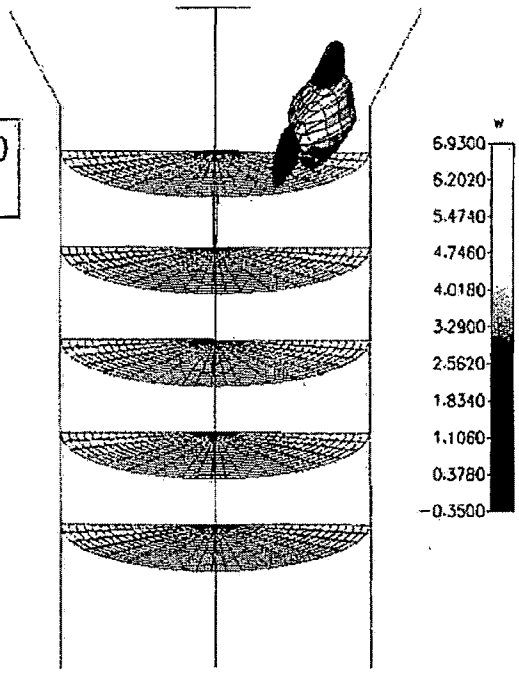

~~The ATHOS code predicted regions of high void fraction and high steam velocities are superimposed with tube-to-tube wear indications from Unit 3 steam generator 3E0-88~~

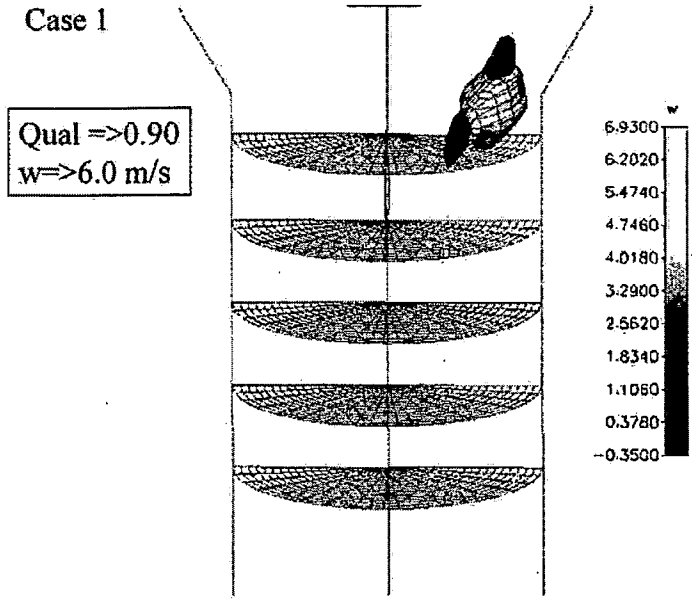


**Figure 5**

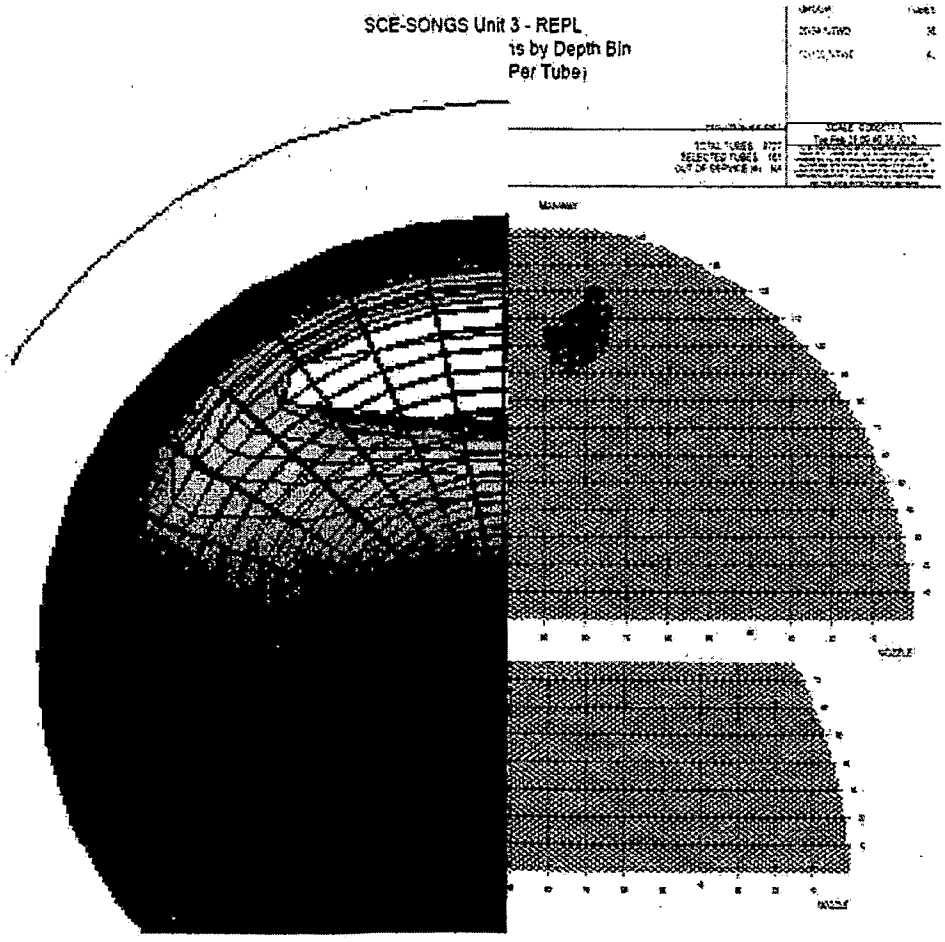


Enclosure

The NRC analysis indicated a correlation with the tube-to-tube wear based on a combination of high void fraction and high steam velocities. It should be noted that the traditional forcing function, fluid velocity squared times density, does not show good agreement with the tube-to-tube wear patterns. This indicated that the high quality steam fluid velocities and high void fraction may be sufficiently high to cause conditions in the generators conducive for onset of fluid-elastic instability.

The above analyses apply equally to Units 2 and 3, so it does not explain why the accelerated fluid-elastic instability wear damage was significantly greater in Unit 3 steam generators. The ATHOS thermal-hydraulic model predicts bulk fluid behavior based on first principals and empirical correlations and as a result it is not able to evaluate mechanical, fabrication, or structural material differences or other phenomena that may be unique to each steam generator. Therefore this analysis cannot account for these mechanical factors and differences which could very likely also be contributing to the tube degradation.

~~c.~~8.3 Conclusion

~~The team identified one unresolved item associated with the non-conservative FIT-III thermal-hydraulic model results.~~

Based on independent NRC thermal-hydraulic analysis, the team concluded that the SONGS replacement steam generators were not designed with adequate margin to

preclude the onset of fluid-elastic instability. Therefore unless changes are made to the operation or configuration of the steam generators, high fluid velocities and high void fractions in localized regions in the u-bend will continue to cause excessive tube wear and accelerated wear that could result in tube leakage and/or tube rupture. The deficiencies appear to be related to Mitsubishi's FIT-III thermal hydraulic code having predicted non-conservative low velocity results and low void fractions. These results ~~led~~lead Mitsubishi to conclude that margins to instability were significantly larger than they actually are. This assessment is based on eddy current data, NRC ATHOS analysis, Mitsubishi ATHOS analysis, and other thermal-hydraulic analyses completed by Westinghouse and AREVA that all identified significantly higher fluid velocities and void fractions than FIT-III.

Based on the cause evaluation and corrective action plan, SCE determined that the best solution to prevent tube-to-tube wear was to conservatively plug and stabilize the affected areas. By taking the impacted tubes out-of-service, SCE determined that this should reduce the potential for localized fluid velocities reaching critical velocity. In addition, in order to ensure sufficient margin to preclude the onset of fluid-elastic instability, SCE determined that reactor power would also have to be reduced. At this time SCE is still developing additional corrective actions to prevent tube-to-tube wear. The actions have not been finalized and no determination has been made concerning the appropriate power level. The NRC has not made any conclusions on the proposed corrective actions. Once the corrective actions have been finalized, they will be ~~inspected~~reviewed and evaluated as part of the Confirmatory Action Letter followup inspection.

9.0 Risk Assessment (Charter Item 9)

a. Inspection Scope

The team reviewed the steam generator tube leak and failures of multiple steam generator tubes during in-situ pressure testing to support an assessment of the risk of the degraded steam generator tubes during various accident conditions, including a main steam line break accident.

b. Observations and Findings

No findings were identified.

An NRC senior reactor analyst ~~performed a preliminary~~ is currently working with SCE risk assessment~~. The risk is composed of two parts: (1) a non-consequential steam line break that induces a steam generator tube rupture, specifically involving the degraded tubes; and (2) an elevated risk of a tube rupture as an initiating event.~~

~~Assuming that a steam line break would cause the degraded steam generator tubes~~ personnel to ~~rupture during a "T/2" exposure period of 6 months yielded a change in the large early release frequency of 4E-6/yr. However, SCE informed the NRC that a calculation is under review that will likely indicate that the differential pressures generated by a steam line break would not be large enough to rupture the degraded tubes as long as operators successfully implemented their emergency procedures. If this is confirmed,~~determine the risk associated with ~~steam line breaks will be significantly reduced.~~

~~Although in this case the degraded condition of the tubes was manifested as a small primary to secondary leak, it is possible that a full-blown rupture could have been the first indication. The baseline core damage frequency of a steam generator tube rupture, according to the SONGS SPAR model, is 4.26E-7/yr. Because of an unmitigated bypass of containment, the large early release frequency is also 4.26E-7/yr. Assuming conservatively that the steam generator tube rupture frequency would at least double, the increase in large early release frequency attributable to the degraded tubes would be approximately 2.13E-7/yr (taking into account a 6-month exposure period).~~

~~It should be noted, this is a preliminary assessment of the risk requiring additional information and inspection to ascertain whether a performance deficiency exists. This does not include or preclude regulatory or enforcement action by the NRC~~the loss of tube integrity for multiple tubes.

10.0 Assess Quality Assurance, Radiological Controls, and Safety Culture Components (Charter Item 10)

a. Inspection Scope

The team reviewed the event, operator actions, management decisions, steam generator eddy current examinations, in-situ pressure testing, and tube plugging and

stabilization activities to determine whether issues related to quality assurance, radiological controls, or safety culture existed.

b. Observations and Findings

No findings were identified.

Region IV radiation protection inspectors reviewed the estimated offsite radiation exposure from the actual steam generator tube leak on Unit 3 steam generator 3E0-88 that occurred on January 31, 2012, including the potential dose consequence to site workers and members of the public. The licensee determined that the Unit 3 steam generator tube leak resulted in a release of gaseous effluents into the public domain, and the primary radionuclides released were argon-41, xenon-133, and xenon-135. The release resulted in an estimated 0.0000452 (4.52 E-5) mrem dose to the public. Inspectors also reviewed design drawings and radiation monitor data, performed plants tours, and confirmed the licensee's use of the offsite dose calculation methodology.

~~c. Conclusions~~

~~The Region IV radiation protection~~The inspectors concluded that the Unit 3 steam generator tube leak was detected by the condenser steam jet air ejector radiation monitor 3RT-7820 as per design. In addition, the radiation monitor 3RT-7820 alarmed and alerted SONGS operators of the steam generator tube leak as required. ~~The inspectors concluded that SCE appropriately accounted for the unplanned release associated with the Unit 3 steam generator tube leak.~~

11.0 Operational impacts from Unit 3 to Unit 2 (Charter Item 11)

a. Inspection Scope

As follow-on of the previous sections, the team reviewed collections of the Mitsubishi documents and presentations, licensee documents and presentations, and NRC independent analysis and assessments to consider the operational impact on Unit 2 based on analysis and data, including eddy current results, regarding the as-found condition of Unit 3. The team compared key observations and overall differences in operational parameters that are common to both units that could affect and possibly limit Unit 2 operation. The team focused on differences in fabrication, manufacturing, operation, and eddy current data results between Units 2 and 3 steam generators.

b. Observations and Findings

No findings were identified.

Based on the review of current Cycle 16 operating data and independent NRC analysis it does not appear that there were any major difference in the thermal hydraulic phenomena at normal full power operation. Since generator physical dimensions and design are identical, the operational parameters are basically the same between the Unit 2 and 3 steam generators; therefore, the hydraulic forcing function that caused tube-to-tube wear and accelerated anti-vibration bar and tube support plate wear should also be same. The initial inspections of the Unit 2 steam generators did not indicate significant wear except at the retainer bars (different mechanism caused this wear). However, subsequent follow up inspections in Unit 2 with a more sensitive probe confirmed the existence of minor tube-to-tube wear in two neighboring tubes but in one of the steam generators. The tube-to-tube wear that was found in Unit 2 was in a similar location as that found in both of the Unit 3 steam generators.

The phenomenon of fluid-elastic instability is a function primarily of two criteria: the fluid velocity forces and the damping capability of the support structure (i.e., the tube support plates, the tubesheet, and the anti-vibration bars). Therefore, if it is determined that the thermal hydraulic forces in the bundle are the same, it can be concluded that the damping forces between the Unit 2 and Unit 3 replacement steam generators must be different. Mitsubishi performed several studies that indicated that gap contact forces in the anti-vibration bars were greater in Unit 2 than in Unit 3. However, with the exception of manufacturing data that shows slight differences, there is not currently a method available to measure the clearances between the anti-vibration bars and the tubes; however, SCE is currently working with AREVA to develop a method to take these measurements.

The tube damage found in Unit 3 is markedly more severe than Unit 2, especially considering that Unit 3 operated only about half the amount of time as Unit 2. This suggests that there is indeed a sizeable difference in the damping capability of the unit steam generators.

There are generally two options to arrest localized damaging thermal hydraulic phenomena in steam generators. The first and preferred option is to plug tubes in the

affected area. The collective plugging tends to relocate and reduce high fluid velocities and void fractions, and has on previous occasions in industry been successful. However, if plugging selected tubes does not provide significant margins adequate to arrest the damage mechanism, thermal hydraulic conditions can be reduced through a reduction in power. Reducing power has several beneficial effects including (1) tends to increase steam pressure, (2) reduces high steam fluid velocities and high void fraction in the bundle, and (3) improves damping. Currently, SCE is still reviewing and developing additional corrective actions to preclude fluid-elastic instability. The NRC has been observing some of the mockup testing being used to qualify additional repair activities.

~~c. Conclusions~~

~~Based on the review of actual operating data and independent thermal-hydraulic modeling analyses, the team determined that there were no major differences in the thermal-hydraulic phenomena at normal full power operation.~~

~~The NRC will review both physical and operational changes that SCE completes as part of the Confirmatory Action Letter inspections.~~

12.0 Mitsubishi Divider Plate Manufacturing and Weld Issues (Mitsubishi Charter Item 2)

a. Inspection Scope

On March 18, 2009, Mitsubishi identified cracking indications in the weld between the divider plate and the channel head of Unit 3 replacement steam generator 3E0-88 (see figure below), after completion of the ASME Section III hydrostatic test on the secondary side. The extent of condition investigation also identified similar cracking indications in Unit 3 replacement steam generator 3E0-89. As discussed in Section 4 of this report, the cause of the cracking was attributed to the air carbon-arc gouging process used to remove the clad weld from the channel head. The team reviewed information associated with the repair of the cracking indications to assess whether the repair activities resulted in relevant differences in design and fabrication that could be considered as contributing factors for the cause of the tube-to-tube wear issue in Unit 3.

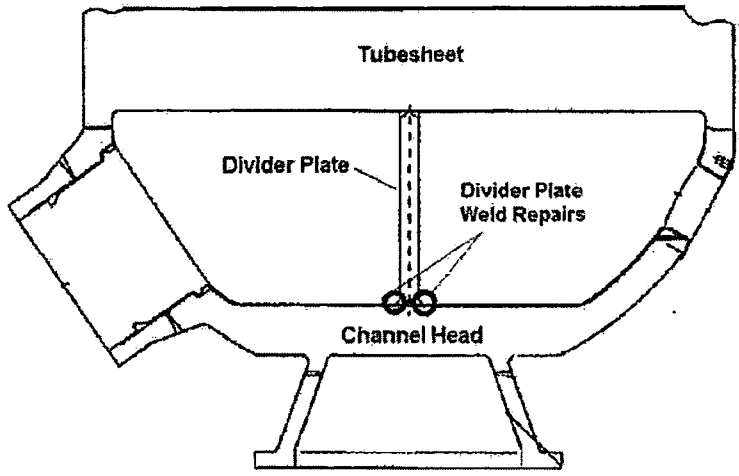


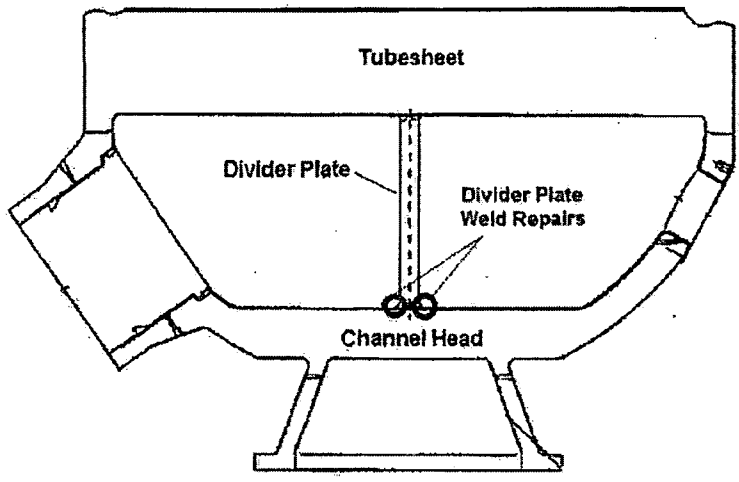


Location of Divider Plate Weld Repairs in Unit 3 Steam Generators (For Illustration Purposes Only)

b. Observations and Findings

No findings were identified.

The team identified an unresolved item for which additional information is required to determine if a performance deficiency exists or if the issue constitutes violation of NRC requirements. The team also identified several observations related to the divider plate weld repairs in Unit 3 replacement steam generators.

1) Introduction: The team identified an Unresolved Item associated with the adequacy of evaluation and controls for the divider plate weld repairs.

Description: The cracking of the divider plate weld in both Unit 3 replacement steam generators required extensive repairs affecting the channel head, divider plate, and tubesheet. Based on interviews with licensee personnel and the review of documentation for the repairs, the team determined that Mitsubishi did not perform a comprehensive evaluation to assess the impact of the divider plate repairs on the integrity of the tube bundle. The team determined that the areas listed below were not considered or evaluated in sufficient depth to identify the potential adverse effects of the planned weld repairs.

- Additional Rotations – The repair activities for the Unit 3 steam generators required additional rotations of the steam generator assembly while these were oriented in the horizontal position. The repairs resulted in approximately 300 additional rotations in each steam generator, which could have affected the configuration of the tube bundle in terms of anti-vibration bar gaps or distortion. The team identified that Mitsubishi did not fully evaluate the impact of additional rotations on the configuration of the steam generators since rotation was considered a normal evolution in the fabrication process.

- Heat Input – The repair process included extensive heat-adding activities such as grinding, flame cutting, and post-weld heat treatment. While these activities were performed in accordance with the construction code of record and an approved repair plan, they could have resulted in thermal expansion and unintended distortion of steam generator components. For example, the channel heads were removed using flame cutting and Mitsubishi's evaluation for the impact of this activity was limited to the base material area in the vicinity of the cut, i.e. the heat affected zone. Mitsubishi did not fully assess the impact this activity could have on the overall configuration of the steam generator in terms of thermal expansion of the tubesheet or distortion.

- Dimensional Checks after Repair – The team identified that Mitsubishi did not perform dimensional verifications (e.g. clearances) of the tube bundle or other secondary side dimensions after the repairs of the Unit 3 steam generators to confirm that critical dimensions were not affected by the repairs.

Additional review by the NRC is required following completion of the licensee's cause evaluation to fully assess how the repair activities affected the Unit 3 replacement steam generators and then determine whether this issue represents a performance

deficiency or constitutes a violation of NRC requirements. This issue is identified as URI 05000362/2012007-09, "Evaluation of the Effects of Divider Plate Weld Repairs in Unit 3 Replacement Steam Generators."

2) Repair Plan: The team noted that Mitsubishi developed a specific plan to conduct the repair of the divider plate weld in both Unit 3 replacement steam generators. The repair plan adequately described the major repair steps and the required implementing procedures. For some of the repair stages, the licensee developed new procedures to prescribe activities outside the normal fabrication sequence. The repair plan consisted of the following major steps:

   - Cutting off the divider plate from the tubesheet by grinding
   - Cutting off the channel head from the tubesheet by flame cutting
   - Cutting the divider plate from the channel head by grinding
   - Removal of the heat affected zone of the channel head bowl edge due to flame cutting
   - Application of weld buildup and post-weld heat treatment on the channel head bowl edge
   - Application of low alloy steel buildup and Alloy 690 butter on the bottom of the channel head for divider plate welding, including required post-weld heat treatment
   - Application of Alloy 690 buildup on the divider plate, including required post-weld heat treatment
   - Welding divider plate to channel head
   - Welding the divider plate to the tubesheet
   - Welding the channel head to the tubesheet
   - Primary side hydrostatic test

3) Differences between Replacement Steam Generators: The team identified the notable differences listed below between Unit 2 and Unit 3 replacement steam generators as a result of the divider plate weld repair activities.

   - Material Class for the Tubesheets – The tubesheet material for both Unit 3 replacement steam generators was reclassified to facilitate the additional post-weld heat treatment required for the repair of the divider plate welds. The tubesheet manufacturer originally certified that the tubesheet material met the requirements of ASME specification SA-508/Grade 3/Class 2, with a post-weld heat treatment time of approximately 15 hours. The repair activities in Unit 3 required additional post-weld heat treatment, which was expected to affect the properties of the tubesheet material to the extent that the mechanical properties would not meet the requirements for SA-508/Grade 3/Class 2 material. Mitsubishi performed mechanical testing on a specimen fabricated from the archive samples that was exposed to 30 hours of post-weld heat treatment and the tests showed that the tubesheet material's tensile strength did not meet the ASME specifications for SA-508/Grade 3/Class 2 material. Mitsubishi performed a reconciliation review to reclassify the material to SA-508/Grade 3/Class 1,

which has a lower tensile strength. The reconciliation included an evaluation of resulting stresses on the tubesheet under design, upset, emergency, faulted, and test conditions using the material properties for SA-508/Class 1 material. The evaluation resulted in acceptable stresses based on the stress limits imposed by the construction code of record. This issue was evaluated by Mitsubishi in the non-conformance report process and Supplier Deviation Request SDR-~~08610041870~~-086 10041870-09086 was submitted to the licensee for review and approval. The licensee approved the reclassification of the tubesheet material.

- Minimum Thickness of the Channel Head Base Metal – The channel heads of both Unit 3 steam generators were removed by flame cutting to facilitate the divider plate weld repairs. The removal and final welding of the channel head resulted in a reduction of the minimum wall thickness of the channel head base metal. The minimum base metal thickness was reduced by 1.18-inches. Mitsubishi evaluated this change in the "Design Report for the Channel Head Region." The reduction in minimum wall thickness was addressed through a reconciliation of stress ratios based on the stress limits imposed by the construction code of record. The analysis demonstrated the structural adequacy of the channel head, primary inlet nozzle, primary outlet nozzle, primary manway, support skirt, and the stud bolts of the primary manway.

- Number of Bolts in the Divider Plate Patch Plates – The original design of the replacement steam generators included a patch plate held in place at the upper corners of the divider plate by three bolts. As a result of the divider plate-to-tubesheet weld removal to support the repair activities, the Unit 3 divider plate patch plates were modified to be held by two bolts instead of the three bolts specified in the original design. Mitsubishi submitted this design change to the licensee for review and approval. Licensee personnel approved the design change as requested.

- Weld Buildup on Channel Head Surfaces – Since the repair of the divider plate welds in Unit 3 steam generators required cutting of the channel head, weld buildup had to be applied on the affected surfaces in order to restore the dimensions to design specifications. Mitsubishi submitted this design change to the licensee for review and approval. Licensee personnel approved the design change as requested.

- Post Weld Heat Treatment – The tubesheet-to-channel head weld area experienced a total of two post-weld heat treatments. Both Unit 3 replacement steam generators received an additional local post-weld heat treatment at approximately 1103° F for approximately 3.5 hrs. Mitsubishi submitted this fabrication process change to the licensee for review and approval. Licensee personnel approved the design change as requested.

- Total of Rotations during Fabrication – The total number of rotations on each steam generator varied as a result of the hydrostatic test results and the repairs on the divider plate welds.

| Steam Generator | Initial Rotations | Additional Rotations for Divider Plate Repairs | Total Rotations |
|---|---|---|---|
| Unit 2 E0-89 | 520 | 0 | 520 |
| Unit 2 E0-88 | 510 | 0 | 510 |
| Unit 3 E0-89 | 470 | 340 | 810 |
| Unit 3 E0-88 | 440 | 320 | 760 |

~~c. Conclusions~~

~~The team identified one unresolved item associated with the repair work done on the Unit 3 divider plate. The team did not identify any connection between the repairs of the divider plate and the unexpected tube-to-tube wear.~~

13.0 Office of Nuclear Reactor Regulation (NRR) Review of SONGS 50.59 Evaluation

a. Inspection Scope

The NRR technical specialist reviewed all of the design changes associated with the replacement steam generators to determine whether the changes to the facility or procedures, as described in the updated final safety analysis report, had been reviewed and documented in accordance with 10 CFR 50.59 requirements. The technical specialist reviewed the various information used by SCE to review the changes being made to the replacement steam generators, including calculations, analyses, design change documentation, procedures, the updated final safety analysis report, the technical specifications, and plant drawings. The evaluation process used by the technical specialist included determining if the design changes to the replacement steam generators were a change to the facility or procedures as described in the updated final safety analysis report or a test or experiment not described in the updated final safety analysis report. The technical specialist also verified that safety issues related to the changes were resolved. The technical specialist compared the safety evaluations and supporting documents to the guidance and methods provided in NEI 96-07, "Guidelines for 10 CFR 50.59 Implementation," Revision 1, as endorsed by NRC Regulatory Guide 1.187, "Guidance for Implementation of 10 CFR 50.59, Changes, Tests, and Experiments," to determine the adequacy of the 10 CFR 50.59 evaluations.

b. Observations and Findings

No findings were identified

The NRR technical specialist identified one unresolved item for which additional information is required to determine if performance deficiencies exist or if the issues constitute violations of NRC requirements.

(1) Introduction: The NRR technical specialist reviewed SCE's 10 CFR 50.59 evaluation contained in Engineering Change Packages 800071702 and 800071703 for the Unit 2 and Unit 3 replacement steam generators, respectively, in which SCE determined that the impact of the replacement steam generators on the current licensing basis and any need for NRC approval as required by 10 CFR 50.59.

(2) Description: The NRR technical specialist reviewed the SCE's 10 CFR 50.59 evaluation against 10 CFR 50.59(c)(2)(viii) which requires that licensees obtain a license amendment pursuant to 10 CFR 50.90 prior to implementing a proposed change if the change would result in a departure from a method of evaluation described in the final safety analysis report (as updated) used in establishing the design bases or in the safety analyses. Industry guidance NEI 96-07, Revision 1, Section 3.10, "Methods of Evaluation," states, "Definition: Methods of evaluation means the calculational framework used for evaluating behavior or response of the facility or structures, systems, and components." Regulation 10 CFR 50.59 a(2), states, "*Departure from a method of evaluation described in the FSAR (as updated) used in establishing the design bases or in the safety analyses* means (i) changing any of the elements of the method described in the FSAR (as updated) unless the results of the analysis are conservative or essentially the same; or (ii) changing from a method described in the FSAR to another method unless that method has been approved by NRC for the intended application." Regulation 10 CFR 50.59(d)(1) requires that the licensee maintain records of changes in the facility that "includes a written evaluation which provides the bases for the determination that the change, test, or experiment does not require a license amendment...." The technical specialist evaluated SCE's bases for determining that the changes would not result in the departure from the method of evaluation used in establishing the design bases or in the safety analyses. Specifically, the technical specialist evaluated whether the changes involved:

(a) changing of any of the elements of the method described in the updated final safety analysis report, which consistent with 10 CFR 50.59 a(2)(i) would be justified by demonstrating that the results of the analysis are conservative or essentially the same; or

(b) changing from a method described in the updated final safety analysis report to another method, which consistent with 10 CFR 50.59 a(2)(ii) would be justified by demonstrating that method has been approved by NRC for the intended application.

The NRR technical specialist reviewed SCE's 10 CFR 50.59 evaluation and found two instances that failed to adequately address whether the change involved a departure of the method of evaluation described in the updated final safety analysis report.

(a) Use of ABAQUS instead of ANSYS: Updated Final Safety Analysis Report Sections 3.9.1.2.2.1.11 and 3.9.1.2.2.2.3 were revised to reflect that the SONGS Unit 2 and 3 original steam generators stress analyses for reactor coolant system structural integrity utilized the ANSYS computer program, whereas the replacement steam generators analyses utilized the ABAQUS computer program. The SCE's 50.59 evaluation incorrectly determined that using the ABAQUS instead of ANSYS was a change to an element of the method described in the updated final safety analysis report did not constitute changing from a method described in the updated final safety analysis report to another method, and as such, did not mention whether ABAQUS has been approved by the NRC for this application.

(b) Use of ANSYS instead of STRUDL and ANSYS: Updated Final Safety Analysis Report Section 5.4.2.3.1.3 was revised to reflect that the SONGS Unit 2 and 3 evaluation of tube stress under loss of coolant accident conditions for the original steam generators consisted of a two-step process utilizing the STRUDL and ANSYS computer programs to calculate displacement histories and tube stresses, respectively, while the corresponding replacement steam generators analysis determined tube stresses from blowdown forces using only the ANSYS computer program. While SCE's 50.59 evaluation correctly considered this a change from a method described in the FSAR to another method, the 50.59 evaluation did not mention whether the method has been approved by NRC for this application.

~~This issue is identified as URI 05000362/2012007-10, "Evaluation of Departure of Method of Evaluation for 10 CFR 50.59 Processes."~~

~~c. Conclusions~~

~~The NRR technical specialist identified one unresolved item associated with a change in the method of evaluation as described in the updated final safety analysis report.~~ Additional review and followup will be required to review the departure of the method of evaluation used during the stress analysis calculations associated with the replacement steam generators and then determine whether this issue represents a performance deficiency or constitutes a violation of NRC requirements. This issue is identified as URI 05000362/2012007-10, "Evaluation of Departure of Method of Evaluation for 10 CFR 50.59 Processes."

14.0 Exit Meeting Summary

On June 18, 2012, the NRC held a public meeting and presented the inspection results to Mr. P. Dietrich, Senior Vice President and Chief Nuclear Officer, and other members of the staff, who acknowledged the findings. Proprietary information was provided to the team and all proprietary information was returned to SCE.

**SUPPLEMENTAL INFORMATION**
**KEY POINTS OF CONTACT**

Licensee Personnel

P. Dietrich, Senior Vice President and Chief Nuclear Officer
R. Litzinger, President, SCE
D. Bauder, Vice President and Station Manager
T. Palmisano, Vice President of Engineering, Projects and Site Support
T. McCool, Plant Manager
T. Yackle, Assistant Plant Manager
D. Yarbrough, Director, of Operations
R. Corbett, Director, of Performance Improvement
O. Flores, Director, of Nuclear Oversight
R. St. Onge, Director, of Nuclear Regulatory Affairs
B. Winn, Director, of Nuclear Financial Management
E. Avella, Director, of Project Management
M. Coveney, Director, of Nuclear Leadership
M. Stevens, ~~Technical Specialist~~Title needed, Nuclear Regulatory Affairs
C. Cates, ~~Manager,~~ Nuclear Safety Culture and Site Recovery Manager
M. Malzahn, ~~Engineer,~~ Project Management Engineer
C. Harberts, ~~Manager,~~ Steam Generator Replacement Project Manager
M. Mihalik, Senior Engineer, Project Management Organization
R. McWey, ~~Manager,~~ Nuclear Oversight Manager
M. Pawlaczyk, ~~Technical Specialist,~~ Nuclear Regulatory Affairs Technical Specialist
J. Peattie, ~~Manager,~~ Maintenance Manager
R. Treadway, ~~Manager,~~ Nuclear Regulatory Affairs Manager
B. Olech, Consulting Engineer, Edison
~~J~~D. Brabec, Project Manager, Steam Generator Recovery Program
D. Calhoun, Senior Engineer, Design Engineering Organization, Edison

Mitsubishi Personnel

H. Kaguchi, Mitsubishi Heavy Industries, Director, Component Designing Department
I. Otake, Mitsubishi Heavy Industries, Deputy Chief Engineer, Quality Assurance Department
T. Tsuruta, Mitsubishi Heavy Industries, Engineer, Quality Assurance Department
T. Inoue, Mitsubishi Heavy Industries, Deputy Director, Plant Designing Department
H. Hirano, Mitsubishi Heavy Industries, Project Manager, Overseas Project, Component Designing Department
R. Bywater, Mitsubishi Nuclear Energy Systems, COLA ~~Project~~Licensing Manager
F. Gillespie, ~~Mitsubishi Nuclear Energy Systems, Senior Vice President~~
~~R. Godley, Mitsubishi Nuclear Energy Systems, Deputy General Manager, Licensing Support~~
R. Godley.

Other Contractor Personnel

R. Walker, MPR Consultant

M. Short, Consultant
~~B. Marlow, AREVA, Vice President, Key Accounts~~
~~M. Street, AREVA, Manager, Primary Component Projects and Warranty Support~~
~~M. Miller, AREVA, Advisory~~Bruce ?, Areva, TITLE NEEDED
??, ATHOS Engineer, NAME AND TITLE NEEDED
~~S. Claunch, AREVA, Advisory Engineer~~

[M2]

NRC Personnel
T. Blount, Deputy Division Director, Division of Reactor Safety
R. Lantz, Branch Chief, Projects Branch D
G. Warnick, Senior Resident Inspector

## LIST OF ITEMS OPENED, CLOSED AND DISCUSSED

Opened

| | | |
|---|---|---|
| 05000362/2012007-01 | URI | Adequacy of the Trip/Transient and Event Review Procedure (Section 1) |
| 05000362/2012007-02 | URI | Evaluation of Unit 3 Vibration and Loose Parts Monitoring System Alarms (Section 3) |
| 05000362/2012007-03 | URI | Evaluation of Retainer Bars Vibration during the Original Design of the Replacement Steam Generators (Section 4 |
| 05000362/2012007-04 | URI | Evaluation of Changes in Dimensional Controls during the Fabrication of Unit 2 and Unit 3 Replacement Steam Generators (Section 4) |
| 05000362/2012007-05 | URI | Shipping Requirements not in Accordance with Industry Standards (Section 7) |
| 05000362/2012007-06 | URI | Shipping Requirements not in Accordance with Design and Fabrication Specifications (Section 7) |
| 05000362/2012007-07 | URI | Unit 3 Steam Generator ~~3E0-88~~E088 Stresses Related to Handling (Section 7) |
| 05000362/2012007-08 | URI | Non-Conservative Thermal-Hydraulic Model Results (Section 8) |
| 05000362/2012007-09 | URI | Evaluation of the Effects of Divider Plate Weld Repairs in Unit 3 Replacement Steam Generators (Section 12) |
| 05000362/2012007-10 | URI | Evaluation of Departure of Method of Evaluation for 10-CFR 50.59 Processes (Section 13) |

Closed

None

Discussed

None

## LIST OF DOCUMENTS REVIEWED

AUDITS/SELF-ASSESSMENTS/QUALITY CONTROL DRAWINGS

SONGS DOCUMENTS

| Number | Title | Revision/Date |
|---|---|---|
| MHI-1-06 | Southern California Audit of Mitsubishi Heavy Industries | June 16, 2006 |
| MHI-1-09 | Southern California Audit of Mitsubishi Heavy Industries | April 27, 2009 |
| MHI-2-04 | Southern California Audit of Mitsubishi Heavy Industries | December 14, 2004 |
| SCES-007-10 | Procurement and Material Control Program Audit | September 14, 2010 |
| MHI-01-04 | Evaluation and Review of Contractor, Consultant, Utility or Licensee Audit Report | September 24, 2004 |
| | Status of Southern California Edison (SCE) Corrective Action Request (CAR) Nos. S-1918 and S-1932 Closure | March 23, 2007 |
| | Southern California Edison (SCE) Corrective Action Request (CAR) No. S-1991, Supplier Stop Work Order (SSWO) No. SSWO-001-08 | 1 |
| SO123-XV-50 | Corrective Action Program | 25[g3] |
| | RSG-SCE/MHI-06-2233 – Southern California Edison (SCE) Corrective Action Request (CAR) No. S-1882 Closure | May 3, 2006 |
| | RSG-SCE/MHI-06-1916 - Southern California Edison (SCE) Corrective Action Request, (CAR) No. S-1906 Closure | February 22, 2006 |
| | Southern California Edison (SCE) Audit No. MHI-1-06 and Corrective Action Request (CAR) Nos. S-1915, S-1916, S-1917, and S-1918 | January 31, 2008 |
| AR# 040901345 | Qualification Letter | September 24, 2004 |

| Number | Title | Revision/Date |
|---|---|---|
| AR#050301458 | Qualification Letter | March 23, 2005 |
| AR#060500134 | Qualification Letter | May 10, 2006 |
| 6C294014 | Edison Material Supply Procurement Order for Mitsubishi Heavy Industries | September 28, 2004 |
| SO23-617-01 | Specifications for design and fabrication of RSG for Unit 2 and Unit 3 | 4 |
| SO23-617-02 | Specifications for Baseline Pre-Service Examination on Tubing for RSG | 1 |
| SO23-617-03 | Replacement Steam Generator Installation Unit 2 and 3 | 4 |
| SO23-617-04 | Specifications for the Transportation of Replacement Steam Generators | 1 |
| TL C001783 | San Onofre Topical Report Quality Assurance Manual | 64 |
| TL C001782 | San Onofre 2&3 FSAR Updated Quality Assurance Program Topical Report SCE-1 | 15 |
| | SONGS Unit 2 & 3 Replacement Steam Generator QA/QC Manufacturing Oversight Plan Japan Steel Works | 0 |
| | SONGS Unit 2 & 3 Replacement Steam Generator QA/QC Oversight Plan | 1 |
| | SONGS Unit 2 & 3 Replacement Steam Generator Receipt Inspection Plan | 0 |
| SGR-A10183 | Replacement Steam Generator Resident Oversight Plan | 1 |
| SGR-A10159 | San Onofre Nuclear Generating Station Unit 2 & 3 Steam Generator Replacement Project Plan | 1 |
| MHI-1SV-05 | Source Verification Report of MHI/Japan Steel Work | March 15, 2005 |
| MHI-1SV-06 | Source Verification Report of MHI/Japan Steel Work | February 7, 2006 |
| MHI-1SV-07 | Source Verification Report of MHI | March 20, 2007 |
| MHI-1SV-08 | Source Verification Report of MHI/Japan Steel Work | August 29, 2008 |
| MHI-2SV-05 | Source Verification Report of MHI | April 1, 2005 |

| Number | Title | Revision/Date |
|---|---|---|
| MHI-2SV-06 | Source Verification Report of MHI/Japan Steel Work | March 24, 2006 |
| MHI-2SV-07 | Source Verification Report of MHI | November 2, 2007 |
| MHI-3SV-05 | Source Verification Report of MHI/Japan Steel Work | May 3, 2005 |
| MHI-3SV-06 | Source Verification Report of MHI | May 3, 2006 |
| MHI-4SV-05 | Source Verification Report of MHI/Japan Steel Work | May 4, 2005 |
| MHI-4SV-06 | Source Verification Report of MHI/Japan Steel Work | May 23, 2006 |
| MHI-5SV-05 | Source Verification Report of MHI/Japan Steel Work | June 10, 2005 |
| MHI-5SV-06 | Source Verification Report of MHI | September 26, 2006 |
| MHI-6SV-05 | Source Verification Report of MHI | July 1, 2005 |
| MHI-6SV-06 | Source Verification Report of MHI | January 24, 2007 |
| MHI-7SV-05 | Source Verification Report of MHI/Japan Steel Work | August 12, 2005 |
| MHI-7SV-06 | Source Verification Report of MHI | January 16, 2007 |
| MHI-8SV-05 | Source Verification Report of MHI | March 26, 2007 |
| MHI-8SV-06 | Source Verification Report of MHI | Date? |
| MHI-9SV-05 | Source Verification Report of MHI/Japan Steel Work | October 13, 2005 |
| MHI-10SV-05 | Source Evaluation Report of MHI | February 8, 2006 |
| MHI-11SV-05 | Source Verification Report of MHI/Japan Steel Work | December 21, 2005 |
| SO123-XII-18.19 | Nuclear Oversight Procedure Supplier Audits | 10 |
| SO123-XII-7.12 | Nuclear Oversight Procedure Source Verification | 5 |

CALCULATIONS

| Number | Title | Revision |
|---|---|---|
| SO23-617-1-C275 | Design Report of the Channel Head Region | 6 |
| SO23-617-1-C514 | Design for RCS Flow Rate | 1 |
| SO23-617-1-M1562 | Retainer Bar Tube Wear Report | 0 |

CORRECTIVE ACTION REPORTS[g4]

| | | | | |
|---|---|---|---|---|
| | | | | |

DESIGN BASIS DOCUMENTS

| Number | Title | Revision |
|---|---|---|
| SO23-617-01 | Specification for Design and Fabrication of RSGs for Unit 2 and Unit 3 | 4 |
| SO23-617-1-M1492 | As-Built Reconciliation Report for Unit 3 | 2 |
| L5-04GA428 | Design of Anti-Vibration Bar | 5 |
| DBD-SO23-365 | Design Basis for Steam Generator and Secondary Side | 10 |

DESIGN CHANGE NOTIFICATIONS/SUPPLIER DEVIATION REQUESTS

| Number | Title | Revision |
|---|---|---|
| NECP 800071703 | Engineering Change Package, "Replacement Steam Generators" | 0 |
| SDR-007 43366-05007 | Circulation Ratio for RSG | 0 |
| SDR-037 43366-06037 | Tube-to-Tube Clearance in 2A RSG | 0 |
| SDR-047 43366-07047 | Tool Mark in 3A Tubesheet | 0 |
| SDR-050 43366-07050 | Tool Mark in 3B Tubesheet | 0 |

| Number | Title | Revision |
|---|---|---|
| SDR-051 43366-07051 | Unit 2A Lower Shell Assembly | 0 |
| SDR-053 43366-07053 | Unit 2B Lower Shell Assembly | 0 |
| SDR-059 43366-08059 | Unit 3B Lower Shell Assembly | 0 |
| SDR-064 43366-08064 | Axial Length of AVB | 0 |
| SDR-079 43366-08079 | Statistical Size of Tube-to-AVB Gap | 0 |
| SDR-082 43366-09082 | Divider Plate Repair of Unit 3 RSGs | 0 |
| SDR-086 10041870-09086 | Specifications for Unit 3 RSG Tube Material | 0 |
| SDR-098 10041870-10098 | Overall Height of 3A RSG | 0 |
| SDR-099 10041870-10099 | Perpendicularity and Parallelism of 3A RSG Key Bracket | 0 |
| SDR-100 10041870-10100 | Parallelism of 3B RSG Key Bracket | 0 |

DRAWINGS

| Number | Title | Revision |
|---|---|---|
| SO23-617-1-D103 | Design Drawing – Component and Outline Drawing 1 / 3 | 5 |
| SO23-617-1-D104 | Design Drawing – Component and Outline Drawing 1 / 3 | 2 |
| SO23-617-1-D106 | Design Drawing Tubesheet and Extension Ring 1 of 3 | 12 |
| SO23-617-1-D107 | Design Drawing Tubesheet and Extension Ring 2 of 3 | 5 |
| SO23-617-1-D108 | Design Drawing Tubesheet and Extension Ring 3 of 3 | 8 |
| | | |
| SO23-617-1-D109 | Design Drawing Lower Shell, Middle Shell, Transition Cone and Upper Shell Stub 1 of 4 | 5 |
| SO23-617-1-D110 | Design Drawing Lower Shell, Middle Shell, Transition Cone and Upper Shell Stub 2 of 4 | 7 |

| Number | Title | Revision |
|---|---|---|
| SO23-617-1-D111 | Design Drawing Lower Shell, Middle Shell, Transition Cone and Upper Shell Stub 3 of 4 | 4 |
| SO23-617-1-D112 | Design Drawing Lower Shell, Middle Shell, Transition Cone and Upper Shell Stub 4 of 4 | 4 |
| SO23-617-1-D113 | Design Drawing Channel Head 1 of 4 | 9 |
| SO23-617-1-D113 | Design Drawing Channel Head 1 of 4 | 15 |
| SO23-617-1-D114 | Design Drawing Channel Head 2 of 4 | 13 |
| SO23-617-1-D115 | Design Drawing Channel Head 3 of 4 | 5 |
| SO23-617-1-D116 | Design Drawing Tube Bundle 1 of 3 | 1 |
| SO23-617-1-D117 | Design Drawing Tube Bundle 2 of 3 | 1 |
| SO23-617-1-D118 | Design Drawing Tube Bundle 3 of 3 | 3 |
| SO23-617-1-D159 | Design Drawing Upper Shell, Upper Head Ring and Upper Head Top 1 of 4 | 7 |
| SO23-617-1-D160 | Design Drawing Upper Shell, Upper Head Ring and Upper Head Top 2 of 4 | 2 |
| SO23-617-1-D161 | Design Drawing Upper Shell, Upper Head Ring and Upper Head Top 3 of 4 | 4 |
| SO23-617-1-D162 | Design Drawing Upper Shell, Upper Head Ring and Upper Head Top 4 of 4 | 2 |
| SO23-617-1-D210 | Design Drawing of Moisture Separator Assembly 1 of 6 | 10 |
| SO23-617-1-D211 | Design Drawing of Moisture Separator Assembly 2 of 6 | 10 |
| SO23-617-1-D212 | Design Drawing of Moisture Separator Assembly 3 of 6 | 5 |
| SO23-617-1-D274 | Design Drawing Channel Head 4 of 4 | 4 |
| SO23-617-1-D294 | Design Drawing Tube Support Plate Assembly 1 of 3 | 3 |
| SO23-617-1-D295 | Design Drawing Tube Support Plate Assembly 2 of 3 | 4 |
| SO23-617-1-D296 | Design Drawing Tube Support Plate Assembly 3 of 3 | 5 |
| SO23-617-1-D383 | Design Drawing – Critical Field Interface Dimensions and Major Tolerances 1 / 3 | 7 |
| SO23-617-1-D391 | Design Drawing Wrapper Assembly 1 of 5 | 5 |
| SO23-617-1-D392 | Design Drawing Wrapper Assembly 2 of 5 | 0 |

| Number | Title | Revision |
|---|---|---|
| SO23-617-1-D393 | Design Drawing Wrapper Assembly 3 of 5 | 2 |
| SO23-617-1-D394 | Design Drawing Wrapper Assembly 4 of 5 | 2 |
| SO23-617-1-D395 | Design Drawing Wrapper Assembly 5 of 5 | 3 |
| SO23-617-1-D494 | Design Drawing – Divider Plate1 / 2 | 10 |
| SO23-617-1-D495 | Design Drawing – Divider Plate 2 / 2 | 6 |
| SO23-617-1-D507 | Design Drawing Anti-Vibration Bar Assembly 1 of 9 | 4 |
| SO23-617-1-D508 | Design Drawing Anti-Vibration Bar Assembly 2 of 9 | 2 |
| SO23-617-1-D509 | Design Drawing Anti-Vibration Bar Assembly 3 of 9 | 0 |
| SO23-617-1-D539 | Design Drawing Anti-Vibration Bar Assembly 4 of 9 | 0 |
| SO23-617-1-D540 | Design Drawing Anti-Vibration Bar Assembly 5 of 9 | 2 |
| SO23-617-1-D541 | Design Drawing Anti-Vibration Bar Assembly 6 of 9 | 2 |
| SO23-617-1-D542 | Design Drawing Anti-Vibration Bar Assembly 7 of 9 | 8 |
| SO23-617-1-D543 | Design Drawing Anti-Vibration Bar Assembly 8 of 9 | 3 |
| SO23-617-1-D544 | Design Drawing Anti-Vibration Bar Assembly 9 of 9 | 1 |
| SO23-617-1-D680 | Design Drawing – Tubing Expansion and Seal Welding | 3 |
| SO23-617-1-D1099 | Fabrication Drawing – General Shipping Arrangement [SON 2E89; SON 2E882E0-88] | 2 |
| SO23-617-1-D1100 | Fabrication Drawing – General Shipping Arrangement [SON 3E89; SON 3E88] | 2 |
| SO23-617-1-D1488 | Fabrication Drawing – Temporary Attachment For Channel Head and Tubesheet Welding (Unit 3) | 0 |
| L5-04FW111 | Detail of AVB 1 of 5 (Center Narrow AVB) | 6 |
| L5-04FW112 | Detail of AVB 2 of 5 (Center Wide AVB) | 2 |
| L5-04FW113 | Detail of AVB 3 of 5 (Side Narrow AVB) | 2 |
| L5-04FW114 | Detail of AVB 4 of 5 (Side Wide AVB for Hot Side) | 2 |
| L5-04FW115 | Detail of AVB 5 of 5 (Side Wide AVB for Cold Side) | 2 |

ENGINEERING REPORTS (ER)

| Number | Title | Revision |
|---|---|---|
| SO23-617-1-M1401 | Divider Plate Weld Joint Separation Root Cause Evaluation Report | 4 |
| SO23-617-1-C157 | Evaluation of Tube Vibration | 3 |
| SO23-617-1-C749 | Analytical Report of AVB Assembly | 4 |
| SO23-617-1-M1265 | Summary Design Report | 8 |
| SO23-617-1-M1231 | Performance Analysis Report | 3 |
| SO23-617-1-C682 | Analytical Report of Separator and Dryer Assemblies | 7 |
| SO23-617-01R3 | Design Report of Tube | 5 |

MHI DOCUMENTS

| Number | Title | Revision/Date |
|---|---|---|
| UHQ-08N013 | MHI Survey Report of Sumitomo Metal Industries, Limited. Steel Tube Works | 0 |
| UHQ-11N010 | MHI Survey Report of Sumitomo Metal Industries, Limited. Steel Tube Works | 0 |
| UHQ-05N015 | MHI Survey Report of Sumitomo Metal Industries, Limited. Pipe & Tube Works | 1 |
| UHQ-08N014 | MHI Survey Report of Sumitomo Metal Industries, Limited. Steel Tube Works | 0 |
| UHQ-11S005 | MHI Survey Report of Sumitomo Metal Industries, Limited. Steel Tube Works | 0 |
| UHQ-05N019 | MHI Survey Report of Sumitomo Metal Industries, Limited. Steel Tube Works | 0 |
| BUH94-06 | Quality Assurance Survey/Audit Procedure of Vendors | 6 |
| BUH94-06 | Vendor Evaluation Procedure | 9 |
| BUH94-06 | Vendor Evaluation Procedure | 13 |
| 5ZDD94-06 | Vendor Evaluation Procedure | 1 |

| Number | Title | Revision/Date |
|---|---|---|
| UHQ-08N013 | MHI Survey Report of Sumitomo Metal Industries, Limited. Steel Tube Works | 0 |
| UHW-68-06A002 | MHI Evaluation on Corrective Action Established by Sumitomo Metal Industries Limited | 0 |
| UHNR-SON-RSG-06N005 | Nonconformance Report for Alloy 690 SG Tubing for SONGS Unit 2 | 4 |
| UHQ-07N004 | MHI Audit Report of Sumitomo Metal Industries, Limited. Steel Tube Woks | 1 |
| UHCP-70N004 | Corrective Action Plan Followup Report | 0 |
| UES-20100006 | Qualified Vendor List | 18 |
| L5-04GB004 | Submittal Document Control List | 53 |
| UGNR-SON2-RSG-020 | Nonconformance Report Channel head for Unit 2A | February 2, 2006 |
| UGNR-SON2-RSG-038 | Nonconformance Report Unacceptable local diameter change of tube holes | June 2, 2006 |
| UGNR-SON2-RSG-052 | Nonconformance Report Unacceptable length of 10 tube hole pitch of tube support plate #3 | September 11, 2006 |
| UGNR-SON2-RSG-062 | Nonconformance Report Incorrect end caps of AVB 2ASN154C and AVB 2ASN164C | December 1, 2006 |
| UGNR-SON2-RSG-075 | Nonconformance Report Unacceptable gaps between tubes and AVBs | March 24, 2007 |
| UGNR-SON2-RSG-091 | Nonconformance Report Incorrect machining for steam flow limiting device | September 4, 2007 |
| UGNR-SON2-RSG-096 | Nonconformance Report Unacceptable dimensions for steam flow limiting device of Unit 2A | October 23, 2007 |
| UGNR-SON3-RSG-009 | Nonconformance Report Unacceptable local diameter change of tube holes | May 10, 2007 |
| UGNR-SON3-RSG-024 | Nonconformance Report Some gaps between tubes and AVBs are larger than the criterion | November 30, 2007 |

| Number | Title | Revision/Date |
|---|---|---|
| UHQ-08N013 | MHI Survey Report of Sumitomo Metal Industries, Limited. Steel Tube Works | 0 |
| UGNR-SON3-RSG-049 | Nonconformance Report Out of tolerance on hand holes inside diameter | March 2, 2009 |
| UGNR-SON3-RSG-055 | Nonconformance Report Divider plate metal repair butter/weld crack after post bake | September 11, 2009 |
| UGNR-SON-RSG-06N002 | Nonconformance Report Feedwater nozzle for unit 2 ID: 21721-101 | February 2, 2006 |
| ~~UGS-L5-050043~~ | ~~Anti-Vibration Bar Inspection Procedure (Individual Bar)~~ | ~~4~~ |
| ~~UGS-L5-050045~~ | ~~Inspection Procedure for Tube and Anti-Vibration Bar Inspection~~ | ~~10~~ |
| B91U-N0001 | Mitsubishi Heavy Industries Ltd Kobe Shipyard & Machinery Works Quality Assurance Manual (Nuclear) | 39 |
| UES-69-040038 | Mitsubishi Heavy Industries Ltd Kobe Shipyard & Machinery Works Quality Assurance Program Manual (Project Addenda) | 15 |
| UHH-G06A97 | Stop Work Order for FMA (Final Mill Annealing) on Manufacturing of Heat Transfer Tubing for SONGS RSG | 0 |

MISCELLANEOUS DOCUMENTS

| ~~Number~~ | ~~Title~~ | ~~Revision/Date~~ |
|---|---|---|
| AR 060500134 | Action Request: Qualification Letter | |
| AR 040901345 | Action Request: Qualification Letter | |
| AR 050301458 | Action Request: Qualification Letter | |
| | Setpoint Transmittal Unit 2 and 3 Gas Monitors | December 6, 2010 |
| | SONGS Unit 3 Chemistry/Operations Logs – SG Event Timeline | January 31, 2012 |
| | Radiation Monitor 3RT-7870 Setpoints | May 31, 2011 |
| | Radiation Monitor 3RT-7818A Setpoints | May 31, 2011 |

| ~~Number~~ | ~~Title~~ | ~~Revision/Date~~ |
|---|---|---|
| 2G-030-3 | Condenser Air Ejector Continuous Gas Post-Release Report | January 31, 2012 |
| SO23-617-01 | Specification for Design and Fabrication of RSGs for Unit 2 and Unit 3 | 4 |
| SO23-617-02 | Specification for Baseline Pre-Service Examination (PSE) on Tubing for Replacement Steam Generators | 1 |
| | Updated Final Safety Analysis Report for San Onofre Units 2 and 3 | April 2009 |
| SO23-617-1-M29 | Design Review Item List | 9 |
| DA 2002-92 | Dominion Audit of Mitsubishi Heavy Industries | June 9, 2002 |
| V03-008 | Omaha Public Power District Audit of Mitsubishi Heavy Industries | July 18, 2003 |
| 99901030/2008-201 | Mitsubishi Heavy Industries (MHI), Kobe, Japan, inspection of selected portions of MHI's Quality Assurance (QA) program, and 10 CFR Part 21 program | July 18, 2008 |
| 99901384/2009-201 | Sumitomo Metal Industries, Limited, Higashi-Mukojima Amagasaki, Japan, inspection of selected portions of Sumitomo's quality assurance (QA) program and 10 CFR Part 21 program | November 13, 2009 |
| SMI-AQA-9041 | Reply to Notice of Nonconformance(99901 384/2009-201-01) | 0 |
| ~~NRC Inspection Report 99901030/2008-201~~ | ~~Inspection of Selected Portions of MHI's Quality Assurance and 10 CFR Part 21 Programs~~ | ~~July 18, 2008~~ |

MODIFICATIONS

| Number | Title | Date |
|---|---|---|
| Engineering Change Package NECP 800071702 | 50.59 Screening and Evaluation for Replacement Steam Generators – Unit 2 | July 31, 2009 |

| | | |
|---|---|---|
| Engineering Change Package NECP 800071703 | 50.59 Screening and Evaluation for Replacement Steam Generators – Unit 3 | July 31, 2009 |

NUCLEAR NOTIFICATIONS[g5]

| | | | | |
|---|---|---|---|---|
| 201907899 | | | | |

*NN's issued as a result of inspection activities.

PROCEDURES

| Number | Title | Revision |
|---|---|---|
| SO123-ODCM | Offsite Dose Calculation Manual | 0 |
| SO123-0-47 | Notification and Reporting of Significant Events | 18 |
| SO123-III-5.9 | Manual Effluent Gaseous Release Permits, Setpoint Calculations, and Monitor Calibration Constant Evaluations | 8 |
| SO123-VIII-1 | EPIP: Recognition and Classification of Emergencies | 36 |
| SD-SO23-310 | System Description - Turbine Building Sampling System | 9 |
| SD-SO23-690 | System Description – Steam Generator E088/089 | 18 |
| SD-SO23-690 | System Description – Steam Generator Radiation Monitors RE-6753 & RE-6759 | 18 |
| SD-SO23-690 | System Description – Condenser Air Ejector Wide Range Radiation Monitors RE-7870A/B & Low Range Radiation Monitors RE-7818 | 18 |
| SB-SO-FB-006 | Divider Plate Weld Joint Repair Procedure | 10 |
| SB-SO-HT-1001 | Post Weld Heat Treatment Procedure | 22 |
| SO123-XXXII-2.27 | Supplier Deviation Requests (SDRs) | 5 |
| SO23-617-1-D104 | Design Drawing - Component and Outline Drawing 2/3 | 2 |
| SO23-617-1-D1099 | General Shipment Arrangement SON-2A | 4 |
| SO23-617-1-M1246 | Hydrostatic Test Procedure | 3 |
| SO23-617-1-M139 | Post Weld Heat Treatment Procedure | 21 |

| | | |
|---|---|---|
| SO23-617-1-M1395 | Divider Plate Weld Joint Procedure | 9 |
| SO23-617-1-M1398 | Divider Plate Weld Joint Repair Plan | 12 |
| SO23-617-1-M1461 | Additional Post Weld Heat Treatment Procedure for Divider Plate Weld Joint Repair | 0 |
| SO23-617-1-M616 | Tubesheet Drilling Procedure | 9 |
| SO23-617-1-M733 | Helium Leak Test Procedure of the Tube to Tubesheet Welds (High Pressure) | 5 |
| SO23-617-1-M735 | Helium Leak Test Procedure of the Tube to Tubesheet Welds (Low Pressure) | 3 |
| SO23-617-1-M819 | AVB Structure Assembly Procedure | 8 |
| SO23-617-1-M820 | Tubing and AVB Installation Procedure | 6 |
| SO23-617-1-M821 | Anti-Vibration Bar Inspection Procedure (After Assembly) | 5 |
| ~~SO123-XV-50~~ | ~~Corrective Action Program~~ | ~~25~~ |
| ~~SO123-XII-18.19~~UGS-L5-050043 | ~~Nuclear Oversight~~Anti-Vibration Bar Inspection Procedure ~~Supplier Audits~~(Individual Bar) | ~~10~~1 |
| ~~SO123-XII-7.12~~UGS-L5-050045 | ~~Nuclear Oversight~~Inspection Procedure ~~Source Verification~~for Tube and Anti-Vibration Bar Inspection | ~~5~~10 |

VENDOR DOCUMENTS

| Number | Title | Revision/Date |
|---|---|---|
| 51-9176667-001 | Engineering Information Record, "SONGS 2C17 & 3C17 Steam Generator Degradation Assessment" | 1 |
| UGNR-SON2-RSG-012 | DI for Tube Support Plate Material | 1 |

| Number | Title | Revision/Date |
|---|---|---|
| UGNR-SON2-RSG-014 | Discrepancy for tube thickness of TSP between Drawing and Purchase Specification | 0 |
| UGNR-SON2-RSG-015 | Unacceptable Indications by MT for wrapper support of Unit 2 #A | 1 |
| UGNR-SON2-RSG-021 | Unacceptable Indications by MT for Anti rotation support of Unit 2 #A | 0 |
| UGNR-SON2-RSG-027 | Unacceptable MT indication for Anti-Rotation Supports | 0 |
| UGNR-SON2-RSG-054 | Unacceptable length of 10 tube hole pitch of tube support Plate # 6 | 1 |
| UGNR-SON2-RSG-058 | Insufficient clearance between the tubes in Row No. 28 and 30 in Column No. 22 | 3 |
| UGNR-SON2-RSG-059 | Insufficient clearance between the tubes in Row No 92 and 94 in Column No. 34 | 0 |
| UGNR-SON2-RSG-067 | Unacceptable Gaps between Tubes and AVBs | 7 |
| UGNR-SON2-RSG-075 | Unacceptable gaps between Tubes and AVBs | 1 |
| UGNR-SON2-RSG-091 | Incorrect Machining for Steam Flow Limiting Device | 0 |
| UGNR-SON2-RSG-103 | Damaged Locking Plates of Vane Jacking Device | 9 |
| UGNR-SON2-RSG-109 | As built dimension of #2A RSG | 1 |
| UGNR-SON2-RSG-112 | As built dimension of #2B RSG | 0 |
| UGNR-SON3-RSG-001 | Tubesheet | 0 |
| UGNR-SON3-RSG-018 | Unacceptable local diameter change of Tube holes | 2 |
| UGNR-SON3-RSG-024 | Some Gaps between Tubes and AVBs are larger than the criterion | 1 |

| Number | Title | Revision/Date |
|---|---|---|
| UGNR-SON3-RSG-030 | Some gaps between tubes and AVBs are larger than the criterion | 0 |
| UGNR-SON3-RSG-051 | Divider Plate Weld Crack | 16 |
| UGNR-SON3-RSG-052 | Divider Plate Weld Crack | 19 |
| UGNR-SON3-RSG-057 | Extension of Tubesheet PWHT Duration | 1 |
| UGNR-SON3-RSG-059 | Out of Tolerance dimensions on Primary Inlet/Outlet Nozzles and Support Skirt | 1 |
| UGNR-SON3-RSG-062 | Out of tolerance dimensions on Primary Inlet/Outlet Nozzles and Support Skirt (#B RSG) | 1 |
| UGNR-SON3-RSG-067 | UT indications in the Alloy 600/690 butter of Divider Plate Weld Groove | 0 |
| UGNR-SON3-RSG-074 | As built dimensions of #3A RSG (Overall Height) | 0 |
| UGNR-SON3-RSG-075 | As built dimension of #3A RSG | 1 |
| UGNR-SON3-RSG-076 | As built dimension of #3B RSG | 0 |
| UHNR-SON3-RSG-07N001 | Divider Plates for Unit 3 | 0 |
| Heat Treatment Record 40010SG-B-900D-R1-68 | Heat Treatment Chart for SG3 | April 4, 2012 |
| SO23-617-1-M149 | Purchase Specification for Heat Transfer Tubing | 4 |
| Fabrication Process Sheet 3901-SG-A-400E (Order 2563901/G101) | Rework of AVB Insertion for SONGS Unit 2 Replacement Steam Generator #A – Lower Portion | 1 |

| Number | Title | Revision/Date |
|---|---|---|
| | | |
| Fabrication Process Sheet 3901-SG-A-400D (Order 2563901/2300) | Helium Leak Test for SONGS Unit 2 Replacement Steam Generator #A – Lower Portion | 0 |
| TSN-5050 | Control Document Status list For Alloy 690 SG Tubing | 2 |
| TSN-5051 | Program of Preproduction Qualification (PPQ) For Alloy 690 SG Tubing | 3 |
| TSN-5053 | Melting Procedure for Alloy 690 SG Tubing | 0 |
| TSN-5054 | Identification and Traceability Procedure for Alloy 690 SG Tubing | 2 |
| TSN-5055 | Prohibited and Detrimental Material Control Procedure for Alloy 690 SG Tubing | 0 |
| TSN-5072 | Sampling Test Specimen Procedure for Alloy 690 SG Tubing | 2 |
| TSN-5073 | Chemical Analysis Procedure for Alloy 690 SG Tubing | 1 |
| TSN-5074 | Inclusion Test Procedure for Alloy 690 SG Tubing | June 4, 2005 |
| 005F-No.4316 | PPQ Test Results of Alloy 690 SG Tubing for San Onofre Nuclear Generating station Unit 2&3 | 2 |
| 4009-3ir01 | Moody International Ltd Inspection Report of Sumitomo Metal Industries | September 28, 2005 |

## SEQUENCE OF EVENTS

### San Onofre Nuclear Generating Station, Unit 2 and 3 Steam Generators

| Date | Event Description |
|---|---|
| November 2001 | Licensee forms a team to study the viability of replacing the steam generators |
| May 7, 2002 | Vendor benchmarking commences |
| July 2002 | Bechtel replacement study complete |
| November 7, 2003 | Replacement steam generator specification complete |
| December 12, 2003 | Replacement steam generator specification sent to procurement office |
| December 21, 2003 | Replacement steam generator request for proposal issued |
| February 17, 2004 | Bechtel installation study report completed |
| February 27, 2004 | Steam generator replacement request filed with California Public Utility Commission |
| February 27, 2004 | Replacement steam generator bids received by SCE |
| July 28, 2004 | Replacement steam generator vendor selected |
| August 2, 2004 | Replacement steam generator bid evaluation review board start |
| September 13, 2004 | Replacement steam generator bid evaluation completed |
| September 16, 2004 | SCE Board of Directors approval for Mitsubishi to design and manufacture steam generators |
| September 30, 2004 | Replacement steam generator contract signed |
| September 30, 2004 | Fabrication of Unit 2 and Unit 3 steam generators commences at Mitsubishi |
| November 2004 | SCE performs first full quality assurance audit of Mitsubishi |
| March 2, 2005 | Replacement steam generator installation specification sent to procurement office |
| March 17, 2005 | Mitsubishi/SCE anti-vibration bar design discussion |
| March 2005 | SCE performs follow-up surveillance audit of Mitsubishi |
| March 23, 2005 | SCE places conditional qualification on Mitsubishi |

| | |
|---|---|
| September 21, 2005 | Final environmental impact report released to public |
| October 2005 | SCE performs follow-up quality assurance audit of Mitsubishi |
| December 15, 2005 | California Public Utility Commission approval received |
| December 15, 2005 | Installation contract signed with Bechtel |
| February 2006 | SCE performs follow-up quality assurance audit of Mitsubishi |
| March 10, 2006 | Edison International Company Board of Directors approval of steam generator replacement project |
| April 22, 2006 | SONGS Unit 2 refueling outage completed |
| May 1, 2006 | Replacement steam generator transportation specification issued |
| May 10, 2006 | SCE removes conditional qualification from Mitsubishi |
| September 27, 2006 | Sumitomo Metal Industries issues a non-conformance report on some tubing for non-conformance to specifications associated with the final mill annealing process |
| September 27, 2006 | Mitsubishi issues stop work order to Sumitomo |
| September 28, 2006 | Mitsubishi issues corrective action request to Sumitomo based on the final mill annealing non-conformance report |
| September 29, 2006 | Mitsubishi visits Sumitomo to conduct root cause investigation |
| October 3, 2006 | Mitsubishi visits Sumitomo to confirm the adequacy of the corrective actions taken to address the root cause findings from the September 29, 2006 meeting |
| October 3, 2006 | Mitsubishi releases stop work order after confirming adequacy of Sumitomo's corrective actions |
| November 10, 2006 | Non-conformance report associated with final mill annealing process is closed |
| March 12, 2007 | Corrective action request associated with the final mill annealing non-conformance report closed |
| May 8, 2007 | Mitsubishi performs followup audit at Sumitomo and issues corrective action request for two findings in the audit |
| July 17, 2007 | Sumitomo submits corrective actions taken for the findings of the May 8, 2007 audit; Mitsubishi closes corrective action request. |
| September 13, 2006 | Mitsubishi/SCE technical meeting regarding anti-vibration bars |

| | |
|---|---|
| April 2008 | Fabrication of Unit 2 steam generators complete |
| April – June 2008 | Mitsubishi performs primary and secondary side hydrostatic pressure tests of Unit 2 steam generators |
| July 4, 2008 | AREVA performs baseline pre-service eddy current examinations on steam generator 2E0-89 at Mitsubishi facilities in Kobe, Japan |
| July 18, 2008 | AREVA performs baseline pre-service eddy current examinations on steam generator 2E0-88 at Mitsubishi facilities in Kobe, Japan |
| ~~July 18, 2008~~ | ~~NRC Inspection Report 99901030/2008-201 was issued. An inspection was completed at the Mitsubishi facility in Kobe, Japan. No violation or non-conformances were identified~~ |
| September and October 2008 | Final inspection for Unit 2 steam generators is completed. Primary and secondary sides filled with nitrogen. |
| December 16, 2008 | Unit 2 steam generators shipped from Kobe, Japan |
| February 14, 2009 | Unit 2 steam generators arrive at SONGS |
| Early March 2009 | Fabrication of Unit 3 steam generators complete |
| Middle March 2009 | Primary and secondary hydrostatic pressure tests conducted on Unit 3 steam generators |
| March 18, 2009 | Unit 3 divider plate weld failure discovered |
| March – July 2009 | Root cause evaluation of the divider plate-to-tubesheet weld conducted by Mitsubishi |
| March – June 2009 | Repair procedures developed for Unit 3 steam generators |
| June 2009 | Repair work on Unit 3 steam generators commences |
| July 2009 | AREVA performs final pre-service eddy current examinations on Unit 2 steam generators at SONGS |
| September 2009 – April 2010 | Unit 2 performs a refueling outage and installs the replacement steam generators |
| March 29, 2010 | Repair work to Unit 3 steam generator 3E0-89 complete |
| April 5, 2010 | Repair work to Unit 3 steam generator 3E0-88 complete |
| April 2010 | Unit 2 recommences power operations |
| April 18, 2010 | Unit 3 steam generator 3E0-89 passes primary side hydrostatic pressure retest |

| | |
|---|---|
| April 24, 2010 | Unit 3 steam generator 3E0-88 passes primary side hydrostatic pressure retest |
| June 2010 | AREVA performs baseline pre-service eddy current examinations on Unit 3 steam generators at Mitsubishi facilities in Kobe, Japan |
| August 2, 2010 | Unit 3 steam generators shipped |
| October 4, 2010 | Unit 3 steam generators arrive at SONGS |
| October 2010 – February 2011 | Unit 3 performs a refueling outage and installs the replacement steam generators |
| February 2011 | Unit 3 recommences power operations |
| January 10, 2012 | Unit 2 refueling outage start |
| January 31, 2012 | Unit 3 tube leak; rapid shutdown commences |
| February 2, 2012 | Unit 3 reaches cold shutdown conditions |
| February 12, 2012 | Unit 3 eddy current inspections commence on both steam generators |
| March 13, 2012 | In-situ pressure testing commences on tubes in steam generator 3E0-88 of Unit 3 |
| March 14, 2012 | In-situ pressure test failures on tubes located in Row 106 Column 78, Row 102 Column 78, and Row 104 Column 78 of steam generator 3E0-88 |
| March 15, 2012 | In-situ pressure test failures on tubes located in Row 100 Column 80, Row 107 Column 77, Row 101 Column 81, and Row 98 Column 80 of steam generator 3E0-88 |
| March 16, 2012 | In-situ pressure test failure on tube located in Row 99 Column 81 of steam generator 3E0-88 |
| March 16 – 21, 2012 | The 65 remaining tubes in steam generator 3E0-88 pass in-situ pressure testing |
| March 15 – 21, 2012 | The 56 identified tubes in steam generator 3E0-89 of Unit 3 are in-situ pressure tested and all tubes passed. |
| March 19 – 29, 2012 | NRC Augmented Inspection Team performs inspections at SONGS |
| March 23, 2012 | NRC received a letter from SCE outlining their commitments for corrective actions prior to restart of both Unit 2 and Unit 3 |

| | |
|---|---|
| March 27, 2012 | NRC issues a Confirmatory Action Letter to SCE |
| June 18, 2012 | NRC conducts public Augmented Inspection Team exit meeting near SONGS |

UNITED STATES
NUCLEAR REGULATORY COMMISSION
REGION IV
1600 EAST LAMAR BLVD
ARLINGTON, TEXAS 76011-4511

Mr. Peter Dietrich
Senior Vice President and
Chief Nuclear Officer
Southern California Edison Company
San Onofre Nuclear Generating Station
P.O. Box 128
San Clemente, CA 92674-0128

SUBJECT: SAN ONOFRE NUCLEAR GENERATING STATION – NRC AUGMENTED INSPECTION TEAM REPORT 05000362/2012007

Dear Mr. Dietrich:

The U. S. Nuclear Regulatory Commission (NRC) completed an inspection at your San Onofre Nuclear Generating Station (SONGS). The enclosed report documents the inspection results, which were discussed with you and other members of your staff during a public exit meeting on June 18, 2012.

Unit 3 had been operating for approximately one year following replacement of the steam generators when on January 31, 2012, control room operators received alarms, that indicated reactor coolant was leaking into steam generator 3E0-88. The leak was unexpected, and the control room operators responded in accordance with their procedures to perform a rapid shutdown, since the leak, although small, had increased enough in a short period of time to warrant the precautionary shutdown. The estimated leak rate was 75 gallons per day. The facility license allows full power operation with a steady leak rate of less than 150 gallons per day.

The first indication of the leak was from the main condenser air ejector radiation monitors reaching their alarm set point. The radiation monitors continuously sample from a vent stack for the purpose of rapidly identifying steam generator tube leaks. This was a direct release of radioactivity to the atmosphere, which is allowed by the facility license, up to limits in the regulations. The licensee reviewed the amount of gaseous radioactivity released and estimated a dose of approximately 0.0000452 mrem to a member of the public. The annual regulatory limit to a member of the public is 100 mrem per year. During a radiation protection inspection the week of February 13, 2012, the team reviewed the licensee dose estimates and did not identify any issues.

Unit 3 control room operators performed a controlled shutdown of Unit 3 on January 31, 2012, and reached cold shutdown conditions on February 2, 2012. The operators then prepared the steam generators for tube inspections, which were started on February 12, 2012. The first

inspection confirmed the location of the leak in steam generator 3E0-88. One tube was found with a small leak and no other tubes were leaking.

The licensee completed an extensive and expanded eddy current inspection of 100 percent of the steam generator tubes in both Unit 3 steam generators. Following pre-established testing requirements, the licensee identified 129 tubes in Unit 3 (56 tubes in steam generator 3E0-89 and 73 tubes in steam generator 3E0-88) that required in-situ pressure testing. This testing began on March 13, 2012, and was performed under ambient conditions.

Of the 129 tubes tested, a total of 8 tubes failed in-situ pressure testing which included the original tube that was leaking. All of the failed tubes occurred in steam generator 3E0-88. Three of the tubes failed at or below a test pressure (3200 psi) equivalent to a design basis main steam line break differential pressure and temperature. The remaining five tubes failed near, but below the maximum differential test pressure of 5250 psig. This test pressure was equivalent to the minimum burst pressure capacity required by the plant technical specifications.

In accordance with Management Directive 8.3, "NRC Incident Investigation Program," deterministic and conditional risk criteria were used to evaluate the level of NRC response for this operational event. This event met three deterministic criteria (involved a major deficiency in design having potential generic safety implications; led to a significant loss of integrity of the primary coolant pressure boundary; and, involved an emergency or non-emergency event or situation, related to the health and safety of the public or on-site personnel or protection of the environment, for which a 10 CFR 50.72 report has been submitted that is expected to cause significant, heightened public or government concern) and the conditional large early release probability for the event was estimated to be in the overlap range for a special inspection/augmented inspection. Based on deterministic criteria being met and the risk assessment of this condition, Region IV, in consultation with the Office of Nuclear Reactor Regulation and Office of Nuclear Security and Incident Response, concluded that the NRC response should be an augmented team inspection.

This augmented inspection was chartered, in part, to identify the circumstances surrounding the tube degradation; review the licensee's actions following discovery of the conditions; evaluate the licensee's review of potential causes of the unusual steam generator tube wear; review the steam generator modeling; and, assess the differences between Unit 2 and Unit 3 steam generators.

Based on inspection, the team concluded that: (1) plant operators responded to the event in accordance with procedures in a manner that protected public health and safety; (2) safety systems were maintained and responded in accordance with the plant design; and (3) the loss of steam generator tube integrity was a serious safety issue that must be resolved. The purpose of this inspection was to gather facts and identify issues requiring followup, and, as such, no findings were identified. Ten items requiring additional followup are documented as unresolved items in the enclosed report.

In accordance with 10 CFR 2.390 of the NRC's "Rules of Practice," a copy of this letter, its enclosure, and your response (if any) will be available electronically for public inspection in the NRC Public Document Room or from the Publicly Available Records (PARS) component of the NRC's document system (ADAMS). ADAMS is accessible from the NRC Web site at http://www.nrc.gov/reading-rm/adams.html (the Public Electronic Reading Room).

Sincerely,

Elmo E. Collins
Regional Administrator

Docket No.: 05000362
License No: NPF-15

Enclosure: Inspection Report 05000362/2012-007
w/Attachment: Supplemental Information

cc w/ encl: Electronic Distribution

DISTRIBUTION:
Regional Administrator (Elmo.Collins@nrc.gov)
Deputy Regional Administrator (Art.Howell@nrc.gov)
DRP Director (Kriss.Kennedy@nrc.gov)
DRP Deputy Director (Allen.Howe@nrc.gov)
DRS Director (Tom.Blount@nrc.gov)
DRS Deputy Director (Patrick.Louden@nrc.gov)
Senior Resident Inspector (Greg.Warnick@nrc.gov)
Resident Inspector (John.Reynoso@nrc.gov)
SONGS Administrative Assistant (Heather.Hutchinson@nrc.gov)
Branch Chief, DRS/PSB2 (Greg.Werner@nrc.gov)
Branch Chief, DRP/D (Ryan.Lantz@nrc.gov)
Senior Project Engineer, DRP/D (Nick.Taylor@nrc.gov)
Project Engineer, DRP/D (David.You@nrc.gov)
Project Engineer, DRP/D (Brian.Parks@nrc.gov)
Public Affairs Officer (Victor.Dricks@nrc.gov)
Public Affairs Officer (Lara.Uselding@nrc.gov)
Branch Chief, DRS/TSB (Dale.Powers@nrc.gov)
RITS Coordinator (Marisa.Herrera@nrc.gov)
Regional Counsel (Karla.Fuller@nrc.gov)
Congressional Affairs Officer (Jenny.Weil@nrc.gov)
OEMail Resource
RIV/ETA: OEDO (Michael.McCoppin@nrc.gov)
DRS/TSB STA (Dale.Powers@nrc.gov)
RSLO (Bill.Maier@nrc.gov)
D/DIR, DORL (Louise.Lund@nrc.gov)
PM (Randy.Hall@nrc.gov)
D: NRR (Eric.Leeds@nrc.gov)
D: NSIR (Jim.Wiggins@nrc.gov)
D: NRO (Glen.Tracy@nrc.gov)
NRR/LPL4 (Michael.Markley@nrc.gov)
NRR/IOEB (Harold.Chernoff@nrc.gov)
EDO (Bill.Borchardt@nrc.gov)
DEDR (Michael.Johnson@nrc.gov)
DIR, DORL Michele.Evans@nrc.gov
DIR, DIRS Ho.Nieh@nrc.gov
D/DIR, DIRS John.Lubinski@nrc.gov

DOCUMENT NAME: S:DRS\REPORTS\SONGS 2012007 AIT-GEW ML12188A748

| | | | | | |
|---|---|---|---|---|---|
| SUNSI Rev Compl. | ☑Yes ☐ No | ADAMS | ☑Yes ☐ No | Reviewer Initials | GEW |
| Publicly Avail. | ☑Yes ☐ No | Sensitive | ☐Yes ☑ No | Sens. Type Initials | GEW |

| | | | | | |
|---|---|---|---|---|---|
| AIT Member/RIV | AIT Member/RII | AIT Member/NRO | AIT Member/NRR | AIT Member/NRR | AIT Member/RES |
| JReynoso | JRivera-Ortiz | JOrtega-Luciano | EMurphy | AJohnson | CThurston |
| | | | | | |
| | | | | | |
| AIT Team Leader/RIV | D:DRS | BC/D:DRP | DRA | RA | |
| GWerner | TBlount | RLantz | AHowell | ECollins | |
| | | | | | |
| | | | | | |

OFFICIAL RECORD COPY

## EXECUTIVE SUMMARY

On January 31, 2012, San Onofre Nuclear Generating Station (SONGS) Unit 3 control room operators received an alarm that indicated a primary-to-secondary reactor coolant leak from steam generator 3E0-88. Although the leak rate was small, it increased enough in a short period of time for the licensee to perform a rapid shutdown. The estimated leak rate was 75 gallons per day. The facility license allows full power operation with a steady state leak rate of less than 150 gallons per day. On February 2, 2012, Unit 3 reached cold shutdown conditions.

On February 12, 2012, Southern California Edison (SCE) commenced eddy current inspections of 100 percent of the tubes in both Unit 3 steam generators. During these inspections, the licensee discovered unexpected wear in both steam generators, including wear at retainer bars (similar to the wear found in Unit 2 steam generators) and significant tube-to-tube wear in the free-span areas. The inspections identified 56 tubes in steam generator 3E0-89 and 73 tubes in steam generator 3E0-88 that SCE performed in-situ pressure testing on to determine if they met the structural integrity requirements in plant technical specifications.

From March 13 – 21, 2012, AREVA conducted in-situ pressure testing of the suspect tubes in both steam generators. There were a total of eight tube failures during testing, all in steam generator 3E0-88. These tubes failed to satisfy the tube integrity performance criteria. At the time of the augmented team inspection, no stabilization or plugging of tubes had been performed in Unit 3 because the licensee was still conducting a cause evaluation of the failed tubes. There were two members of the Augmented Inspection Team on-site during the week of March 12 that observed portions of the in-situ pressure testing.

On March 23, 2012, NRC received a letter from SCE outlining their commitments for corrective actions prior to restart of both Unit 2 and Unit 3.

On March 27, 2012, the NRC issued a Confirmatory Action Letter to SCE, which outlined specific actions the licensee must complete before restarting Units 2 and 3 that included identifying the cause of the tube wear; taking corrective actions to prevent loss of tube integrity; and performing a mid-cycle outage to perform tube inspections.

From March 19 – 29, 2012, the NRC Augmented Inspection Team performed on-site inspections at SONGS. After the on-site portion was completed, the team continued to review various documents and attended a number of expert panels associated with the cause evaluations, thermal/hydraulic modeling, and Unit 2 operational assessment. The team identified ten unresolved items that warranted additional follow-up: (1) adequacy of the post trip/transient procedure; (2) evaluation and disposition of the Unit 3 loose parts monitor alarms; (3) design of retainer bar; (4) control of original design dimensions; (5) evaluation of and controls for divider plate repair; (6) atmospheric controls of Unit 3 steam generators during shipment; (7) no tube bundle support used during shipping; (8) evaluation and disposition of accelerometers; (9) adequacy of Mitsubishi's thermal-hydraulic model; and (10) change of methodologies associated with 10 CFR 50.59 review.

The team determined: (1) plant operators responded to the event in accordance with procedures in a manner that protected public health and safety; (2) equipment responded in accordance with the plant design; and (3) the cause evaluations for Unit 2 and Unit 3 tube wear were appropriate.

At the time of the leak on Unit 3 steam generator 3E0-88, Unit 2 had completed eddy current testing of all the tubes in both steam generators as part of their first refueling outage subsequent to the steam generators being replaced in 2009. The eddy current testing did identify significant tube wear around the upper retainer bar, with one tube requiring in-situ pressure testing. Wear indications were found at anti-vibration bar supports, tube support plates and at a foreign object (that was removed). Southern California Edison did determine the cause of tube wear in Unit 2 to be from vibration of the tubes against the retainer and anti-vibration bars. Initially, no tube-to-tube wear was identified. Because of the extensive tube-to-tube wear identified on Unit 3, SCE conducted additional eddy current testing on 1375 tubes on each Unit 2 steam generator. This testing was completed using a more sensitive probe in the same area where tube-to-tube wear was identified on Unit 3. The licensee identified that two tubes in Unit 2 exhibited tube-to-tube wear similar to the wear identified in Unit 3 steam generators. Initially, these findings resulted in a total of 94 plugged tubes, with 15 tubes stabilized in steam generator 2E0-89. For steam generator 2E0-88 this initially resulted in 98 plugged tubes, with 18 tubes stabilized. Additional plugging and stabilizing was completed for Unit 2 steam generators to address the causes of tube-to-tube wear identified. The corrective actions taken to address the causes of the tube-to-tube wear will be inspected as part of the Confirmatory Action Letter and documented in Inspection Report 05000361, 362/2012009.

Overall, the team concluded that SCE was pursuing the causes of the unexpected Unit 3 steam generator tube-to-tube degradation. In an effort to identify the causes, SCE brought in a large number of outside industry experts, consultants, and steam generator manufacturers, including Westinghouse and AREVA to perform thermal-hydraulic and flow induced vibration modeling and analysis. The licensee identified the most probable causes of the tube-to-tube wear as a combination of higher than predicted thermal/hydraulic conditions and improvements in the manufacturing of the Unit 3 steam generators. The improvements in the manufacturing resulted in less contact forces between the anti-vibration bars and the tubes. The combination of these causes allowed fluid-elastic instability vibration to occur. Additional on-site inspection will be required to review and closeout the unresolved items.

TABLE OF CONTENTS


**EXECUTIVE SUMMARY** ..... - 1 -

**SUMMARY OF FINDINGS** ..... - 2-

**1.0 Description of Event (Charter Item 1)** ..... - 3 -

1.1 Sequence of Events ..... - 3 -

1.2 System Descriptions ..... - 6 -

1.3 Resident Inspectors' Assessment of Steam Generator Tube Leak Event Response ..... - 7 -

1.4 Description of Steam Generator Inspections at SONGS Unit 2 ..... - 9 -

1.5 Description of Steam Generator Inspections at SONGS Unit 3 ..... - 12 -

1.6 In-Situ Pressure Testing ..... - 14 -

**2.0 Probable Cause Evaluation (Charter Item 2)** ..... - 16 -

2.1 SONGS Cause Evaluation ..... - 16 -

2.2 Mitsubishi Cause Evaluation ..... - 17 -

**3.0 Operational Differences in Configuration and Operation Between Unit 2 and 3 (Charter item 3)** ..... - 20 -

**4.0 Design and Manufacturing Differences (Charter Item #4) (Mitsubishi Heavy Industries Charter Item 1)** .. - 22 -

**5.0 Quality Assurance/Quality Control (Charter Item 5) (Mitsubishi Charter Item 4)** ..... - 35 -

5.1 SONGS Quality Assurance/Quality Control ..... - 36 -

5.2 Mitsubishi Heavy Industries Quality Assurance/Quality Control ..... - 37 -

5.3 Quality Assurance Conclusion ..... - 40 -

**6.0 Implementation of Steam Generator Industry Information (Charter Item 6) (Mitsubishi Heavy Industries Charter Item 3)** ..... - 40 -

**7.0 Packing, Shipping, Handling, and Receipt Inspection (Charter Item 7)** ..... - 43 -

**8.0 Thermal-hydraulic and Flow Induced Vibration Modeling (Charter Item 8)** ..... 50

8.1 Thermal-hydraulic Assessments ..... - 47 -

8.2 NRC ATHOS Results ..... - 51 -

8.3 Conclusion ..... - 55 -

**9.0 Risk Assessment (Charter Item 9)** ..... - 56 -

**10.0 Assess Quality Assurance, Radiological Controls, and Safety Culture Components (Charter Item 10)** - 56 -

**11.0 Operational Impacts from Unit 3 to Unit 2 (Charter Item 11)** ..... - 57 -

**12.0 Mitsubishi Divider Plate Manufacturing and Weld Issues (Mitsubishi Heavy Industries Charter Item 2)** ... - 58 -

**13.0 Office of Nuclear Reactor Regulation Review of SONGS 50.59 Evaluation** ..... - 62 -

**14.0 Exit Meeting Summary** ..... - 64 -

**ATTACHMENT 1: SUPPLEMENTAL INFORMATION** ..... A1-1

**ATTACHMENT 2: SEQUENCE OF EVENTS** ..... A2-1

**U.S. NUCLEAR REGULATORY COMMISSION**
**REGION IV**

| | |
|---|---|
| Docket: | 05000362 |
| License: | NPF-15 |
| Report: | 05000362/2012007 |
| Licensee: | Southern California Edison Company |
| Facility: | San Onofre Nuclear Generating Station |
| Location: | 5000 S. Pacific Coast Hwy<br>San Clemente, California |
| Dates: | March 15 through June 18, 2012 |
| Team Leader: | G. Werner, RIV/Branch Chief/Plant Support Branch 2 |
| Inspectors: | A. Johnson, NRR/Materials Engineer<br>E. Murphy, NRR/Senior Materials Engineer<br>J. Ortega-Luciano, NRO/Reactor Operations Engineer<br>J. Reynoso, RIV/Resident Inspector<br>J. Rivera-Ortiz, RII/Senior Reactor Inspector<br>C. Thurston, RES/Reactor Systems Engineer |
| Approved By: | Elmo E. Collins, Regional Administrator |

## SUMMARY OF FINDINGS

IR 05000362/2012007, 03/15/2012 through 06/18/2012, San Onofre Nuclear Generating Station; Augmented Inspection Team.

An Augmented Inspection Team was approved on March 16, 2012. Two inspectors on the team were onsite observing in-situ pressure testing the week of March 12. The remaining inspectors were dispatched to the site on March 19, 2012, to assess the facts and circumstances surrounding the tube leak and unexpected wear of tubes in Unit 3 steam generators. The Augmented Inspection Team was established in accordance with NRC Management Directive 8.3, "NRC Incident Investigation Program," and implemented using Inspection Procedure 93800, "Augmented Inspection Team." The inspection was conducted by a team of inspectors from the NRC's Region IV and Region II offices, the resident inspector from San Onofre Nuclear Generating Station, one engineer from the NRC Office of New Reactors, two engineers from the NRC Office of Nuclear Reactor Regulation, and one engineer from the NRC Office of Research. The team identified 10 issues that will require additional NRC inspection. These issues are tracked as unresolved items in this report.

A. NRC-Identified and Self-Revealing Findings

None

B. Licensee-Identified Violations

None

1.0 Description of Event (Charter Item 1)

1.1 Sequence of Events

In November 2001, SCE formed a team to study the viability of replacing the Unit 2 and Unit 3 original steam generators. The licensee performed an assessment of six steam generator vendors, which included vendor benchmarking, development of the replacement steam generator design specifications, a steam generator request for proposal, and a steam generator bid evaluation. In September 2004, the licensee selected Mitsubishi Heavy Industries (Mitsubishi) as the manufacturer of the replacement steam generator.

A general description and comparison of the Unit 2 and Unit 3 steam generators is included in Section 1.2.1 of this report.

In September 2004, Mitsubishi commenced fabrication of Unit 2 steam generators 2E0-89 and 2E0-88, and completed fabrication in April 2008.

At the time of the contract signing in September 2004, Mitsubishi had a quality assurance program in place that had been approved by the licensee, by taking credit for other utilities' reviews of Mitsubishi's quality assurance program. The licensee informed Mitsubishi that once enough fabrication was underway to support an evaluation, the licensee would perform an audit to confirm that their quality assurance program was operating properly.

In November 2004, the licensee performed an audit of the Mitsubishi quality assurance program at their facilities in Kobe, Japan, and then followed up with a surveillance inspection in March 2005. As a result of these two activities, the licensee informed Mitsubishi that additional oversight of Mitsubishi's design control activities was required. The licensee informed Mitsubishi that the additional oversight conditions would remain in place until such time that Mitsubishi had demonstrated improved design control performance, which would be verified by the licensee. After implementing the extra quality control steps, Mitsubishi submitted a letter to SCE stating that they were ready for the conditional qualification to be lifted. The licensee performed followup audits of Mitsubishi in October 2005 and February 2006, but still found enough instances of design control issues that the additional oversight requirements of the conditional qualification were not lifted. In May 2006, SCE was able to verify that Mitsubishi had demonstrated improved design control performance and therefore removed the conditional qualification of Mitsubishi.

After fabrication of the Unit 2 steam generators was complete in April 2008, Mitsubishi performed hydrostatic pressure tests of the primary and secondary sides of the Unit 2 steam generators. In July 2008, after completion of the hydrostatic pressure tests, AREVA performed the baseline eddy current pre-service examinations of the Unit 2 steam generators at the Mitsubishi facilities in Japan. The final inspections for the Unit 2 steam generators were completed in September and October 2008, followed by filling the primary and secondary sides of the Unit 2 steam generators with nitrogen. The Unit 2 steam generators were shipped from the Mitsubishi facilities in December 2008 and received on site at SONGS in February 2009. In July 2009, AREVA performed the

final eddy current pre-service examination on the Unit 2 steam generators at SONGS. The baseline and final eddy current pre-service examinations were performed in Japan and at SONGS, respectively, to assess whether any changes to the steam generator tubing had resulted from shipping, and no changes were identified.

The Unit 2 steam generators were installed during a refueling outage, between September 2009 and April 2010. On April 13, 2010, Unit 2 returned to power operations. NRC Engineering inspectors performed inspections in accordance with procedures IP 50001 (Inspection 50.59), Steam Generator Replacement Inspection and IP 71111.17, Evaluations of Changes, Tests, or Experiments and Permanent Plant Modifications. The results of the inspections of the replacement steam generators for Unit 2 are documented in NRC Inspection Report 05000361/2009007.

The fabrication of the Unit 3 steam generators 3E0-89 and 3E0-88 was completed between September 2004 and April 2010. The design specifications of the Unit 2 and Unit 3 steam generators were the same when the contract between the licensee and Mitsubishi was signed; however, due to a fabrication issue, there was a modification to the divider plate-to-channel head weld requirements for the Unit 3 steam generators, and to the classification of the Unit 3 tubesheet material. The specifics of these modifications are discussed further in Section 1.2.a of this report.

In March 2009, after initial fabrication of the Unit 3 steam generators was complete, Mitsubishi performed hydrostatic pressure tests of the primary and secondary sides of the Unit 3 steam generators. After completion of the hydrostatic pressure tests, a visual inspection of the steam generator reactor coolant side revealed cracks in the welds that join the divider plate to the channel head of both steam generators.

From March through July of 2009, Mitsubishi performed a root cause evaluation, which showed that a change in the weld preparation process for the divider plate-to-channel head weld had resulted in the cracking of the weld. A repair procedure was developed and repair work on the Unit 3 steam generators began in June 2009. The repairs to the Unit 3 steam generators were completed in late March (3E0-89) and early April (3E0-88) of 2010. In late April 2010, the Unit 3 steam generators passed the primary hydrostatic pressure re-tests. In June 2010, AREVA performed a final eddy current pre-service examination of the steam generators at the Mitsubishi facilities in Japan, and this was used as the baseline pre-service examination for the Unit 3 steam generators. The steam generators were shipped from the Mitsubishi facilities in Japan in early August 2010, and arrived at SONGS in early October 2010.

The Unit 3 steam generators were installed during a refueling outage, between October 2010 and February 2011. On February 18, 2011, Unit 3 returned to power operations. Engineering inspectors performed inspections in accordance with procedures IP 50001, Steam Generator Replacement Inspection and IP 71111.17, Evaluations of Changes, Tests, or Experiments and Permanent Plant Modifications. The results of the inspections of the replacement steam generators for Unit 3 are documented in NRC Inspection Report 05000362/2010009.

Unit 2 was shut down for a scheduled refueling outage on January 10, 2012. Steam generator tubing inspections in steam generator 2E0-89 found unexpected wear caused

by retainer bars on two tubes that required plugging in accordance with the technical specifications. Steam generator tubing inspections in steam generator 2E0-88 found wear on four tubes that required plugging in accordance with the technical specifications. Anti-vibration bars caused the wear on two of the tubes and retainer bars caused the wear on the other two tubes. Because of the unexpected wear, the licensee preventatively plugged 94 tubes in steam generator 2E0-89 and 98 tubes in steam generator 2E0-88. Fifteen of the tubes in steam generator 2E0-89 were stabilized prior to plugging, and 18 of the tubes in steam generator 2E0-88 were stabilized prior to plugging. Additional details of the inspections of the Unit 2 steam generators are provided in section 1.4 of this report

On January 31, 2012, Unit 3 control room operators received an alarm that indicated a primary-to-secondary reactor coolant leak from steam generator 3E0-88. The alarm received was from the main condenser air ejector radiation monitors, which continuously samples from a vent line for the purpose of rapidly identifying steam generator tube leaks. Although the leak rate was small, it increased enough in a short period of time for the licensee to perform a rapid shutdown. The estimated leak rate was 75 gallons per day. The facility license allows full power operation with a steady state leak rate of less than 150 gallons per day. On February 2, 2012, Unit 3 reached cold shutdown conditions. The licensee reviewed the amount of gaseous radioactivity released and estimated a dose of approximately 0.0000452 mrem to a member of the public. The annual regulatory limit to a member of the public is 100 mrem per year. This unplanned offsite release of radioactivity was reviewed by Region IV health physicist inspectors who confirmed SONGS' offsite dose estimate (see Section 10 for additional details).

After shutdown, the licensee started preparations for performing inspections of Unit 3 steam generators 3E0-89 and 3E0-88. The steam generator tube inspections commenced on February 12, 2012, and confirmed the location of the leak in steam generator 3E0-88 as coming from the tube in Row 106 Column 78. No other tubes were found to be leaking. The licensee then performed eddy current inspections of 100 percent of the tubes in both Unit 3 steam generators. During these inspections, the licensee discovered unexpected wear in both steam generators, including wear at retainer bars (similar to the wear found in Unit 2 steam generators) and significant tube-to-tube wear in the freespan areas (u-bend area of the tubes). The inspections identified 56 tubes in steam generator 3E0-89 and 73 tubes in steam generator 3E0-88 that SCE performed in-situ pressure testing on to determine if they met the structural integrity requirements in plant technical specifications. Additional details of the inspections of the Unit 3 steam generators are provided in section 1.5 of this report

From March 13 – 21, 2012, AREVA conducted in-situ pressure testing of the suspect tubes in both steam generators. There were a total of eight tube failures during testing, all in steam generator 3E0-88. These tubes failed to satisfy the tube integrity performance criteria in the technical specifications. Additional details of the in-situ pressure tests are provided in Section 1.6 of this report.

From March 19 – 29, 2012, the NRC augmented inspection team performed inspections onsite at SONGS.

On March 27, 2012, the NRC issued a Confirmatory Action Letter to SCE, which outlined specific actions for each unit that the licensee must complete before restarting Unit 2 and Unit 3.

A more detailed sequence of events can be found in Attachment 2.

1.2 System Descriptions

a. Replacement Steam Generators

The Unit 2 and Unit 3 replacement steam generators contain thermally treated Alloy 690 tubing in a u-bend configuration, with a nominal outside diameter of 0.750 inches and a nominal wall thickness of 0.043 inches. There are 9727 tubes within each steam generator, which are arranged in 142 rows and 177 columns. The rows and columns are arranged in a nominal 1.000 inch triangular pitch (results in approximately 0.25 inches of clearance between tubes). The first thirteen rows of tubes were thermally stress relieved after bending to reduce susceptibility to stress corrosion cracking. The tubes were hydraulically expanded to the full depth of the tubesheet, which has a nominal thickness of 28.19 inches. Seven tube support plates made of Type 405 stainless steel provide lateral support the tubes. The tube support plates contain broached trefoil holes with chamfered lands. Support of the tubes in the upper bundle is provided by six sets of Type 405 stainless steel, V-shaped, anti-vibration bars.

The original Model 3410 steam generators at Unit 2 and Unit 3 were manufactured by Combustion Engineering. Each steam generator had 9,350 mill-annealed, Alloy 600 tubes, which were a combination of u-bend tubes and tubes with two 90 degree bends (also called square bends). The tubes had a nominal outside diameter of 0.750 inches, and a nominal wall thickness of 0.048 inches. The tubes were expanded through the full depth of the tubesheet using an explosive process, and lateral support was provided by a number of lattice-grid (i.e., eggcrate) carbon steel tube supports. Tube support in the upper bundle was provided by carbon steel diagonal bars (commonly called batwings) and vertical straps. The original steam generators contained a cylindrically shaped support structure beneath the center of the tubesheet (called the stay cylinder) that provided structural support to the large diameter tubesheet.

Southern California Edison reviewed Information Notices, Generic Letters, Bulletins, and industry operational experience associated with steam generator issues when developing the design specifications for the replacement steam generators. Some of the changes are summarized below, for additional information see Section 6 of this report.

The design changes between the original and replacement steam generators noted above are commonly used in replacement steam generators today. The thermally treated Alloy 690 tubing provides increased resistance to stress corrosion cracking as compared to thermally treated Alloy 600 tubing. The use of type 405 stainless steel (in lieu of carbon steel) for tube support plates eliminates the denting phenomenon associated with drilled carbon steel support plates. The use of broached trefoil holes (instead of drilled holes) in tube support plates reduces the number of contact points with tubes and increases flow area between the tube and tube support plate, thereby reducing the potential for corrosion products to buildup between the tube and the tube

support plate. Combustion Engineering steam generators with the batwing design have typically suffered from wear on tubes (from the batwings) in the central stay cylinder region, due to higher cross flow velocities in this portion of the steam generators. In an effort to eliminate this high flow region, the replacement steam generators were designed with a thicker tubesheet that was inherently more rigid, and thus did not require the central stay cylinder. By choosing a design with all u-bend tubes, the bat wing design was eliminated and a new anti-vibration bar assembly was used. The new anti-vibration bar assembly is a free floating design that is supported by the tube bundle and is not attached to the tube bundle wrapper.

b. Channel Head-to-Divider Plate Weld

On March 18, 2009, after completion of the primary and secondary side hydrostatic pressure tests, a crack in the weld between the divider plate and the channel head on Unit 3 steam generator 3E0-88 was identified . Examination showed that the dissimilar metal weld, between the Alloy 690 divider plate and the low alloy steel channel head, had separated. Specifically, the failure occurred between the channel head and the Alloy 152 butter weld, which is the weld filler wire equivalent of Alloy 690. Upon examination, a similar weld failure was found in steam generator 3E0-89 although the size of the failure was not as large.

Mitsubishi performed a root cause evaluation and found that air carbon-arc gouging was used to remove the stainless steel cladding from the channel head, in preparation for making the divider plate-to-channel head dissimilar metal weld. The air carbon-arc gouging had resulted in carbon deposits in the channel head that were not completely removed by grinding that was performed after the gouging operation. The high carbon area increased the hardness of the channel head (due to carburization) and was the most probable cause of the failure between the channel head and the Alloy 152 butter weld. Mitsubishi also found that it was possible, but less probable, that the increased hardness of the channel head promoted hydrogen induced cracking in areas of the divider plate-to-channel head weld that had higher local stresses due to geometric configurations (i.e., at the corner of the divider plate).

1.3 Resident Inspectors' Assessment of Steam Generator Tube Leak Event Response

a. Inspection Scope

On January 31, 2012, the resident inspectors were on-site during the Unit 3 steam generator tube leak event. The resident inspectors observed the licensee's response to the steam generator tube leak from the control room; and observed the rapid shutdown, actions to cool the plant down, actions performed during recovery of plant systems, and other operator actions. Additionally, the resident inspectors conducted a review of control room activities and equipment response to determine if the operating crew responded appropriately and if the plant systems responded as expected during the event. The resident inspectors conducted interviews with various on-shift personnel and reviewed the post trip report, which included control room logs, operator statements, and plant data trends to assess overall performance of the crew. The review also included procedure use and adequacy of the guidance used for event response, placing the plant in a safe and stable condition, establishing appropriate parameter limits for plant

cooldown, and conducting the cooldown to cold shutdown conditions. With respect to operator awareness and decision making, the resident inspectors were specifically focused on the effectiveness of control board monitoring, technical decision making, and work practices of the operating crew. With respect to command and control, the resident inspectors focused on actions taken by the control room supervision in managing the operating crew's response to the event.

b. Observations and Findings

No findings were identified.

The team identified one unresolved item for which additional information is required to determine if performance deficiencies exist or if the issue constitutes a violation of NRC requirements.

On January 31, 2012, at 3:05 p.m. (PST), main control room operators at Unit 3 received a secondary plant system radiation alarm associated with the air ejectors followed by a blowdown radiation monitor alarm. Operations personnel responded in accordance with Abnormal Operating Instruction SO23-13-14, "Reactor Coolant Leak," Revision 16, since the entry conditions for a steam generator tube leak were satisfied. Operations personnel determined the leakage to be about 75 gallons per day, using a mass balance calculation (.06 gpm), from steam generator 3E0-88. This leak rate was below the Technical Specification 3.4.13, "RCS Operational Leakage," limit of 150 gallons per day for primary- to-secondary leakage through any one steam generator.

At 4:10 p.m., operations personnel evaluated that the primary-to-secondary leak rate exceeded 75 gallons per day on steam generator 3E0-88 and that the leak was increasing at greater than 30 gallons per day per hour, and consequently, initiated a rapid power reduction to be ≤ 50 percent power in one hour and in Mode 3 within the next two hours per Abnormal Operating Instruction SO23-13-14. In accordance with Abnormal Operating Instruction SO23-13-14, when reactor power was less than 35 percent, operations personnel tripped the reactor at 5:31 p.m. to enter Mode 3.

Due to the manual reactor trip, operations personnel entered Emergency Operating Instruction SO23-12-1, "Standard Post Trip Actions," Revision 26, to ensure the plant was placed in a stable, safe condition, and that the plant was configured to respond to the continuing steam generator tube leak event. Operations personnel implemented the emergency operating instructions and isolated the affected steam generator at 6:00 p.m. A plant cooldown was conducted by using main steam bypass from steam generator 3E0-89 to the main condenser. Mode 4 conditions were achieved at approximately 6 hours after isolation of the steam generator. Cooldown continued until Unit 3 was in Mode 5, cold shutdown.

The resident inspectors concluded that abnormal and emergency operating instructions were performed consistent with expected standards and that operations personnel exhibited the fundamental operator competencies in response to the Unit 3 steam generator tube leak event.

Specifically, the resident inspectors determined that the operating crew displayed a questioning attitude of changing plant parameters and took conservative actions. The operating crew identified important preliminary increasing trends of Unit 3 air ejectors radiation monitors and subsequent alarms in a timely manner for a tube leak in steam generator 3E0-88. Additionally, the resident inspectors determined that crew supervision exercised effective oversight of plant status, crew performance, and control room command and control.

(1) Introduction: The team identified an unresolved item associated with Operations Procedure SO123-0-A8, "Trip/Transient and Event Review," that required a formal review of operator actions and safety systems to determine if important systems responded as design. The formal review was not completed.

Description: On March 19, 2012, the team requested to review the results of operations post trip/transient evaluation of the January 31, Unit 3 tube leak event. Operations Procedure SO123-0-A8, "Trip/Transient and Event Review," Revision 8, required a detailed post trip review following unplanned reactor trips. However, a formal trip/transient and event review was not available because operations personnel determined the Unit 3 event was planned and therefore a formal review was not required.

On March 27, 2012, Team met with operations personnel to discuss items on a draft Unit 3 trip/transient evaluation provided to the team. The team also discussed with operations personnel the requirements in Operations Procedure SO123-0-A8, and concluded a basis for what was "planned" and "unplanned" was not defined. Operations personnel determined the Unit 3 reactor trip was a planned reactor trip because Abnormal Operating Instruction SO23-13-14, "Reactor Coolant Leak," Revision 16, Section 4, had described actions for primary-to-secondary leakage. Specifically, this section stated, in part, under plant conditions of increasing steam generator tube leakage, operations personnel were required to perform a rapid power reduction to less than 35 percent power, then trip the reactor.

The team discussed with operations personnel that definitions for unplanned events have been established through industry standards to report on plant performance. These standards include NEI 99-02, "Regulatory Assessment Performance Indicator Guideline," Revision 6. Industry Guidance NEI 99-02 indicated that Unit 3 reactor trip should be considered unplanned since the reactor trip was required by an abnormal operating instruction and would count against the performance indicator for unplanned reactor trips. NRC Regulatory Issue Summary (RIS) 2000-08, "Voluntary Submission of Performance Indicator Data," Revision 1, allows industry to use NEI 99-02 to report performance indicator data.

Additional review and follow up will be required to review the corrective actions associated with the procedural guidance for an event review and then determine whether this issue represents a performance deficiency or constitutes a violation of NRC requirements. This issue is identified as URI 05000362/2012007-01, "Adequacy of the Trip/Transient and Event Review Procedure"

1.4 Description of Steam Generator Inspections at SONGS Unit 2

On January 10, 2012, SONGS Unit 2 was shutdown for a refueling outage. Southern California Edison personnel conducted a scheduled steam generator inspection in accordance with Technical Specification 6.6.9, "Steam Generator (SG) Program." This was the first inspection of the Unit 2 steam generators since their replacement in January 2010. The accumulated operating time on the replacement Unit 2 steam generators was 1.7 effective full power years. There was no reported primary to secondary leakage at the time of shutdown.

The scope of the inspection included a 100 percent tube sample with an eddy current test bobbin probe over the full tube length, followup rotating coil inspections at special interest locations, and a secondary side foreign object search and retrieval. Three types of flaw indications were found in the tubes:

- Wear at the tube support plate and anti-vibration bar supports
- Wear caused by a loose part
- Wear at retainer bars

With the exception of the wear indications found at tube retainer bar locations, the wear indications found are similar to those found at other replacement steam generators after one cycle of operation. A total of 2411 tubes were found with indications at the tube support plates and anti-vibration bar supports, the vast majority of which had a measured depth of less than 20 percent of the tube wall thickness. Only two of these indications, located at the anti-vibration bar supports, exceeded the Technical Specification 6.6.9.c repair limit of 35 percent of the tube wall thickness. The two affected tubes plus two additional tubes with 31 percent deep indications were stabilized and plugged.

Southern California Edison performed a reanalysis of the bobbin probe eddy current data collected during the Unit 2 inspection program. This reanalysis was performed after the finding of the long free-span indications in Unit 3, allowing insights gained during the Unit 3 inspections to be applied to the Unit 2 data. The scope of this reanalysis was a "box" of 1000 tubes in each Unit 2 steam generator which bounded the region of tubing affected by the instability damage in Unit 3. This reanalysis confirmed the results of the original analysis and did not identify any tube-to-tube wear.

Two tubes were found with indications (less than 35 percent through wall) caused by a small loose part on the secondary side. This loose part was removed from the steam generator. Metallurgical analysis indicated the loose part was a piece of weld metal, most likely introduced during steam generator manufacturing operations. The two affected tubes were left in service.

Six tubes were found with indications at retainer bar intersections. The retainer bars are part of the support structure for the anti-vibration bars and are a unique feature of steam generators manufactured by Mitsubishi. The measured indication depths ranged from 28 to 90 percent of the tube wall thickness. Because of the short measured lengths of these flaws, only the 90 percent indication was in-situ pressure tested as part of condition monitoring. The affected tube was successfully pressurized to 5300 psi with no leakage, confirming that the Technical Specification 6.6.9.b tube integrity

performance criteria were met. Mitsubishi attributed the cause of these indications to retainer bar vibration, the potential for which had not been evaluated during design (see Section 4 for additional details). Fort Calhoun is the only other domestic plant with Mitsubishi steam generators. The retainer bars at Fort Calhoun are significantly stiffer than at SONGS.

The six tubes with retainer bar indications have been plugged and stabilized. In addition, the remaining 182 tubes (total for both Unit 2 steam generators) that intersect the retainer bars were plugged as a preventive measure. Twenty four of these tubes were stabilized prior to plugging to ensure that all 188 plugged tubes will not sever due to continued vibration of the retainer bar. The tubes that were stabilized are strategically located at each end and center of the retainer bars.

Detailed plans for returning Unit 2 to service are still under development. Short-term plans relating to Unit 2 included conducting a full u-bend examination of 1375 tubes in both steam generators using a rotating coil. The tube sample was intended to totally box-in the region affected by free-span wear seen in Unit 3 by significant margin. The rotating coil provides a slightly more sensitive inspection for long free-span wear scars than the bobbin probe. These inspections were performed subsequent to the team's site visit and identified two tubes in Unit 2 steam generator 2E0-89 with shallow free-span wear in the u-bend region. These indications both measured approximately 14 percent deep, and were located in the same region of the bundle affected by free-span indications in the Unit 3 steam generators.

The tube wear data for Unit 2 is shown below.

**SONGS Unit 2 Steam Generators**

**Wear Depths Summary**

| Steam Generator SG2E88 (Through- Wall Wear) | Anti-Vibration Bar | Tube Support Plate | U-Bend Freespan | Retainer Bar | Foreign Object | Total Indications | Tubes with Indications |
|---|---|---|---|---|---|---|---|
| ≥ 50% | 0 | 0 | 0 | 1 | 0 | 1 | 1 |
| 35 - 49% | 2 | 0 | 0 | 1 | 0 | 3 | 3 |
| 20 - 34% | 86 | 0 | 0 | 0 | 2 | 86 | 74 |
| 10 - 19% | 705 | 108 | 0 | 0 | 0 | 813 | 406 |
| TW < 10% | 964 | 117 | 0 | 0 | 0 | 1081 | 600 |
| TOTAL | 1757 | 225 | 0 | 2 | 2 | **1984** | **734*** |

| Steam Generator SG2E89 (Through- Wall Wear) | Anti-Vibration Bar | Tube Support Plate | U-Bend Freespan | Retainer Bar | Foreign Object | Total Indications | Tubes with Indications |
|---|---|---|---|---|---|---|---|
| ≥ 50% | 0 | 0 | 0 | 1 | 0 | 1 | 1 |
| 35 - 49% | 0 | 0 | 0 | 1 | 0 | 1 | 1 |
| 20 - 34% | 78 | 1 | 0 | 3 | 0 | 82 | 67 |
| 10 - 19% | 1014 | 85 | 2 | 0 | 0 | 1101 | 496 |
| TW < 10% | 1499 | 53 | 0 | 0 | 0 | 1552 | 768 |
| TOTAL | 2591 | 139 | 2 | 5 | 0 | **2737** | **861*** |

*This value is the number of tubes with wear indications of any depth and at any location. Since many tubes have indications in more than one depth and location, the total number of tubes is less than the total number of indications.

1.5 Description of Steam Generator Inspections at SONGS Unit 3

After shutdown, the licensee started preparations for performing inspections of Unit 3 steam generators 3E0-89 and 3E0-88. The steam generator tube inspections commenced on February 12, 2012, and confirmed the location of the leak in steam generator 3E0-88 as coming from the tube in Row 106 Column 78. The leak was located 2 inches beyond anti-vibration support number 4 on the hot leg side. It was found to be associated with a long (approximately 30 inches) free-span flaw indication. No other tubes were found to be leaking.

The licensee then performed eddy current inspections of 100 percent of the tubes, full length, in both Unit 3 steam generators with a bobbin probe. The bobbin probe examinations were supplemented by rotating coil examinations to confirm, characterize, and size the indications found by the bobbin probe. These examinations identified over 160 tubes in each steam generator with long free-span indications similar to that found on the leaking tube. In each steam generator, the tubes containing the free-span indications were grouped together in a tightly packed zone near the center of the tube bundle. The free-span indications were located on the upper and/or lower sides (i.e., the extrados and intrados) of the u-bend. Thus, a given free-span indication on the extrados of one tube tended to be matched by a similar indication on the intrados of the adjacent higher row tube located in the same tube column. This pattern provided early evidence to SCE personnel that the free-span indications were wear flaws due to tube-to-tube contact from motion of the u-bends within the plane of the u-bends. More than half of the free-span indications in each steam generator had maximum measured depths exceeding the 35 percent plugging limit in the technical specifications, and ranged to as much as 99 percent (for the non-leaking tubes).

Over 460 tubes in each steam generator were found with wear indications at the tube support plates. In general, tubes exhibiting the free-span wear indications tended to exhibit tube support plate indications with the highest depth measurements, typically with

the deepest values at the seventh tube support plate and trending down at successively lower support levels. Approximately 170 tubes in each steam generator exhibited indications at the tube support plates that exceeded the 35 percent plugging limit, with maximum depths ranging to 70 percent.

Approximately 800 tubes in steam generator 3E0-88 and 900 tubes in steam generator 3E0-89 exhibited wear indications at the anti-vibration bar supports. Most of these measured less than 20 percent deep, and only 2 indications exceeded the 35 percent plugging limit. For tube indications at anti-vibration bars in tubes not exhibiting free-span u-bend indications, the length of the wear indications was confined to within the width of the anti-vibration bars. This was also true in SONGS Unit 2. For tubes that exhibited free-span indications, many of these tubes had wear indications at the anti-vibration bars that extended outside the width of the anti-vibration bars which indicated in-plane movement of these tubes in the u-bend area.

Four tubes were found with indications at retainer bar intersections, with measured depths ranging from 28 to 46 percent. At the time of the team's presence at the site, planned corrective actions with respect to tubes adjacent to the retainer bar were similar to those completed for Unit 2. The four tubes with retainer bar indications were plugged and stabilized. In addition, the remaining 184 tubes (total for both Unit 3 steam generators) that intersect the retainer bars were plugged as a preventive measure. Twenty four of these tubes were stabilized prior. The tubes that were stabilized are strategically located at each end and center of the retainer bars.

Tube wear data for Unit 3 is shown below.

**SONGS Unit 3 Steam Generators**
**Wear Depths Summary**

| Steam Generator SG3E88 (Through-Wall Wear) | Anti-Vibration Bar | Tube Support Plate | Tube-to-Tube Wear | Retainer Bar | Foreign Object | Total Indications | Tubes with Indications |
|---|---|---|---|---|---|---|---|
| ≥ 50% | 0 | 117 | 48 | 0 | 0 | 165 | 74 |
| 35 - 49% | 3 | 217 | 116 | 2 | 0 | 338 | 119 |
| 20 - 34% | 156 | 506 | 134 | 1 | 0 | 797 | 197 |
| 10 - 19% | 1380 | 542 | 98 | 0 | 0 | 2020 | 554 |
| TW < 10% | 1818 | 55 | 11 | 0 | 0 | 1884 | 817 |
| TOTAL | 3357 | 1437 | 407 | 3 | 0 | 5204 | 919* |

| Steam Generator SG3E89 (Through- Wall Wear) | Anti-Vibration Bar | Tube Support Plate | Tube-to-Tube Wear | Retainer Bar | Foreign Object | Total Indications | Tubes with Indications |
|---|---|---|---|---|---|---|---|
| ≥ 50% | 0 | 91 | 26 | 0 | 0 | 117 | 60 |
| 35 - 49% | 0 | 252 | 102 | 1 | 0 | 355 | 128 |
| 20 - 34% | 45 | 487 | 215 | 0 | 0 | 747 | 175 |
| 10 - 19% | 940 | 590 | 72 | 0 | 0 | 1602 | 450 |
| TW < 10% | 2164 | 94 | 1 | 0 | 0 | 2259 | 838 |
| TOTAL | 3149 | 1514 | 416 | 1 | 0 | **5080** | **887*** |

Detailed plans for satisfying the provisions of the NRC March 27, 2012, Confirmatory Action Letter for SONGS Unit 3 were not available and were still being developed.

1.6 In-Situ Pressure Testing

Technical Specification 5.5.9.a for SONGS Units 2 and 3 requires that a condition monitoring assessment be performed during each outage that the steam generator tubes are inspected or plugged to confirm that the tube integrity performance criteria are being met. These performance criteria include standard criteria for structural integrity and accident leakage integrity. The limiting structural criterion applicable to the SONGS Units 2 and 3 is the normal steady state pressure differential across the tubes times a safety factor of three. The limiting accident leakage criterion is 0.5 gallons per minute under main steam line break conditions.

Typically, the requirement for performing condition monitoring is satisfied by analyzing eddy current flaw indications relative to screening criteria that are functions of measured flaw depth, length, and/or eddy current voltage response. These screening criteria are conservative relative to the performance criteria since they make allowance for eddy current measurement error, uncertainties with respect to voltage correlations with flaw depth and burst strength, and material property variability. When these screening criteria are exceeded, in-situ pressure tests may be performed for tubes not meeting the screening criteria to confirm that the performance criteria are met for these tubes. In-situ pressure test procedures at SONGS and the screening criteria for selecting tubes to be tested were in accordance with Electrical Power Research Institute Report 1014983, "Steam Generator In-Situ Pressure Test Guidelines," Revision 3.

At Unit 2, one tube with a measured 90 percent deep indication at a retainer bar location was determined to be outside the screening criteria and was in-situ pressure tested. For Unit 3, an optional strategy to the screening criteria approach was taken in accordance with the Steam Generator In-Situ Pressure Test Guidelines, Appendix A. The Appendix A approach is a statistically based Monte Carlo approach that samples the uncertainty distributions associated with each of the input parameters for calculating tube burst pressure. This methodology selects all tubes determined to have a 0.95 probability or less of meeting the limiting structural integrity performance criterion. Application of this methodology led to selection of 129 tubes on Unit 3 for in-situ

pressure testing, 73 tubes in steam generator 3E0-88 and 56 tubes in steam generator 3E0-89.

The in-situ pressure tests were performed under ambient conditions. Therefore the test pressures were adjusted upward from actual values under hot conditions to account for the increased yield and ultimate strength of the tube material under ambient conditions. The test pressures (with correction factors added) corresponding to normal operating conditions, main steam line break, and three times normal operating pressure differential were 1850 psi, 3200 psi, and 5300 psi, respectively.

The test procedure involved pressurizing the subject tube at a rate not to exceed 200 psi/sec to each test point. At each test point, pressure was held constant for two minutes if the tube was not leaking. If the tube was leaking, pressure was held constant for five minutes before ramping to the next test pressure.

The tube with a 90 percent deep retainer bar indication in Unit 2 was successfully tested to 5300 psi with no leakage. This demonstrated that all performance criteria were met for this tube. For Unit 3, 136 of the 144 tubes were successfully tested to 5300 psi with no leakage, demonstrating that these tubes met the performance criteria. The remaining eight tubes "failed" prior to reaching 5300 psi. Failure in this context means that leakage occurred in excess of the 4.5 gallons per minute pump capacity during the test, and test pressure could not be maintained. All eight tubes that failed were in steam generator 3E0-88. All tubes tested in steam generator 3E0-89 passed with no leakage.

Table 1 summarizes the in-situ pressure test results for the eight tubes that failed the test. Three of the eight tubes failed at or below the test pressure corresponding to main steam line break differential pressure. The tube that leaked causing shutdown of SONGS Unit 3 (row 106, column 78) exhibited the lowest failure pressure, 2874 psi. The three tubes that failed at or below main steam line break pressure failed to meet the accident leakage performance criteria as well as the structural integrity performance criteria. The other five tubes met the accident leakage criteria, but failed to meet the structural criteria.

Prior to being tested to failure, the tube that leaked during operation (row 106, column 78) exhibited a measured leak rate of 0.072 gallons per minute at a test pressure corresponding to normal operating conditions. This compares with a leak rate of 0.06 gallons per minute measured by SCE operating staff for SONGS Unit 3 when they made the decision to shut the plant down. The reported operational leakage was evaluated based on ambient conditions. Both the operational and test measurements are less than the applicable technical specification limit of 0.1 gallons per minute.

Table 1 – SONGS 3 In-Situ Pressure Test Results

| SG | Row | Column | Leak Rate at Normal Operating Conditions (gpm) | Leak Rate at Main Steam Line Break (gpm) | Failure Pressure (psi) |
|---|---|---|---|---|---|

| | | | | | |
|---|---|---|---|---|---|
| 88 | 106 | 78 | 0.072 | >0.5 | 2874 |
| 88 | 102 | 78 | 0 | >0.5 | 3268 |
| 88 | 104 | 78 | 0 | >0.5 | 3180 |
| 88 | 100 | 80 | 0 | >0.5 | 4732 |
| 88 | 107 | 87 | 0 | >0.5 | 5160 |
| 88 | 101 | 81 | 0 | >0.5 | 4889 |
| 88 | 98 | 80 | 0 | >0.5 | 4886 |
| 88 | 99 | 81 | 0 | >0.5 | 5026 |

2.0 Probable Cause Evaluation (Charter Item 2)

While the team was on-site, both SCE and Mitsubishi were in the process of conducting cause evaluations for the tube failure and unexpected wear of steam generator tubes in Unit 3. As part of both evaluations, actions were being taken to understand the differences between Unit 2 and 3 steam generators. The cause evaluations were not complete and were undergoing changes while the Augmented Inspection Team was onsite; however, SCE did subsequently complete their cause evaluation prior to the team's exit meeting. The team did a detailed review of the completed cause evaluation.

2.1 SONGS Cause Evaluation

a. Inspection Scope

The team conducted an overall and independent review of SCE's actions taken to understand the probable cause for the steam generator tube degradation. The team reviewed the updated final safety analysis report, technical specifications, design basis documents, original steam generator design, replacement steam generator design, purchase order specifications, design changes, manufacturing changes, nonconformance reports, supplier deviation reports, and interviewed personnel. The review included understanding the licensee's criteria for determining the cause, or if one could not be determined, the most probable cause. .

b. Observations and Findings

No findings were identified.

The team participated in discussions with the licensee's cause analysis team and noted that the licensee employed various root cause evaluation techniques. These included a change analysis technique that compared design differences and a problem analysis technique relying on a systematic process that looked at the causal effects and risk assessments of possible causes. The team reviewed the licensee causal analysis summary that assigned a ranking of highly probable to unlikely.

In the area of thermal hydraulic analysis the licensee contracted AREVA to verify the accuracy of Mitsubishi's thermal-hydraulic code (FIT III) used during the design of the replacement steam generators, by comparing it to ATHOS, a thermal-hydraulic code developed by the Electric Power Research Institute (EPRI). In addition, SCE contracted Westinghouse to perform a completely independent analysis using a Westinghouse modified ATHOS thermal-hydraulic code. AREVA also performed independent flow induced vibration analyses. The licensee brought on board MPR associates and numerous other technical experts, including a world renowned expert in flow induced vibration, to assist in the cause assessment. The team observed that SCE preliminary causal analysis was generally consistent with that of Mitsubishi. Initially, the licensee reviewed the following cause contributors:

- Departure from original steam generator u-bend/anti-vibration bar configuration - highly probable
- Departure from original steam generator stay cylinder configuration - possible
- Departure from original steam generator tube support plate configuration - possible
- Replacement steam generator anti-vibration bar structure too flexible - possible
- Additional 300 rotations of Unit 3 replacement steam generator due to divider plate repair work - possible
- Thermal-hydraulic and flow induced vibration models used in replacement steam generator design incorrectly predicted replacement steam generator tube bundle behavior – possible

The team observed that the licensee performed a detailed analysis and attempted to address all probable causes. The team observed that some of the conditions which were eliminated as potential contributors may need further evaluation. In particular, the team believed that the only major difference between Units 2 and 3 was the divider plate repair to both Unit 3 steam generators. This difference had been discounted by both SCE and Mitsubishi. The divider plate is further discussed in Section 12.0 of this report.

The completed SCE cause evaluation identified the mechanistic cause of the tube-to-tube wear as fluid-elastic instability caused by a combination of localized high steam/water velocity, high steam void fraction, and insufficient contact forces between the anti-vibration bars and the tubes. The Mitsubishi thermal/hydraulic model under-predicted the actual thermal/hydraulic conditions in the steam generator and improvements in fabrication between Unit 2 and Unit 3 steam generators led to the reduced contact forces.

2.2 Mitsubishi Cause Evaluation

a. Inspection Scope

The team conducted an overall and independent review of Mitsubishi's actions taken to understand the probable cause of the steam generator tube degradation. While onsite, the inspection team was informed that Mitsubishi was performing a failure analysis to characterize the mechanism causing the tube-to-tube wear condition in Unit 3. The team had periodic discussions with Mitsubishi personnel to gather information on the probable causes under consideration. The team reviewed information contained in the updated final safety analysis report, technical specifications, design basis documents, purchase order specifications, design changes, design drawings, manufacturing changes, nonconformance reports, and supplier deviation reports to understand the design and fabrication of the replacement steam generators and independently assess the information obtained from Mitsubishi's in-progress cause evaluation.

b. Observations and Findings

No findings were identified.

The team determined that Mitsubishi was performing a thorough evaluation of the failure mechanism leading to the tube-to-tube wear in Unit 3. The team noted that Mitsubishi gathered factual information about the design, fabrication, and operation of the replacement steam generators in Unit 2 and Unit 3 to understand the differences between these components and identify potential contributing causes. The team discussed the preliminary failure mechanism theory with Mitsubishi personnel, who attributed the tube-to-tube; wear to a combination of design, fabrication, and operational factors.

Mitsubishi's preliminary explanation of the failure mechanism started with the combination of two factors: (1) a relatively small tube pitch to tube diameter ratio (P/D), and (2) high void fraction in the tube bundle area where the tube-to-tube wear was identified. The small pitch to diameter ratio was a fixed parameter in the replacement steam generators established by the nominal center-to-center distance between adjacent tubes (P) and the nominal outside diameter of the tubes (D). The high void fraction was identified from the results of Mitsubishi's thermal-hydraulic model for the secondary side of the replacement steam generators. Mitsubishi considered that the combination of these two factors may have resulted in favorable conditions for in-plane tube vibration based, in part, on the results of recent studies in fluid-elastic instability.

Additionally, Mitsubishi identified that the Unit 3 replacement steam generators had better dimensional controls during the fabrication process. This determination was based, in part, on the results of pre-service and in-service eddy current examinations, and fabrication data from Unit 2 and Unit 3 replacement steam generators. The correlation of dimensional controls with the failure mechanism was that improved dimensional controls for Unit 3 replacement steam generators resulted in less variability of as-built critical dimensions such as anti-vibration bar thickness, tube roundness, and gaps between tubes and anti-vibration bars. Condition Report 201836127, Cause Evaluation, Revision 0, lists one of the mechanistic causes of the tube-to-tube wear to

be associated with the reduction in dimensional variability that resulted in less contact force between the tubes and the anti-vibration bars.

The failure mechanism model also considered a fluid dynamic effect associated with the spreading of the tubes in the U-bend region during normal operating conditions. This effect was informally referred to as "flowering," due to the characteristic shape in which the tube bundle spreads transverse to the plane of the u-bends at normal operating conditions. "Flowering" was described as the elastic deformation of the anti-vibration bar structure and the tube bundle in the U-bend region, as a result of thermal expansion and fluid dynamic pressure acting on the secondary side of the tubes (see figure below). The deformation caused by the "flowering" effect was believed to result in multiple areas of no contact between the anti-vibration bars and the tubes, which minimized resistance to in-plane motion of the u-bend area of the tubes.

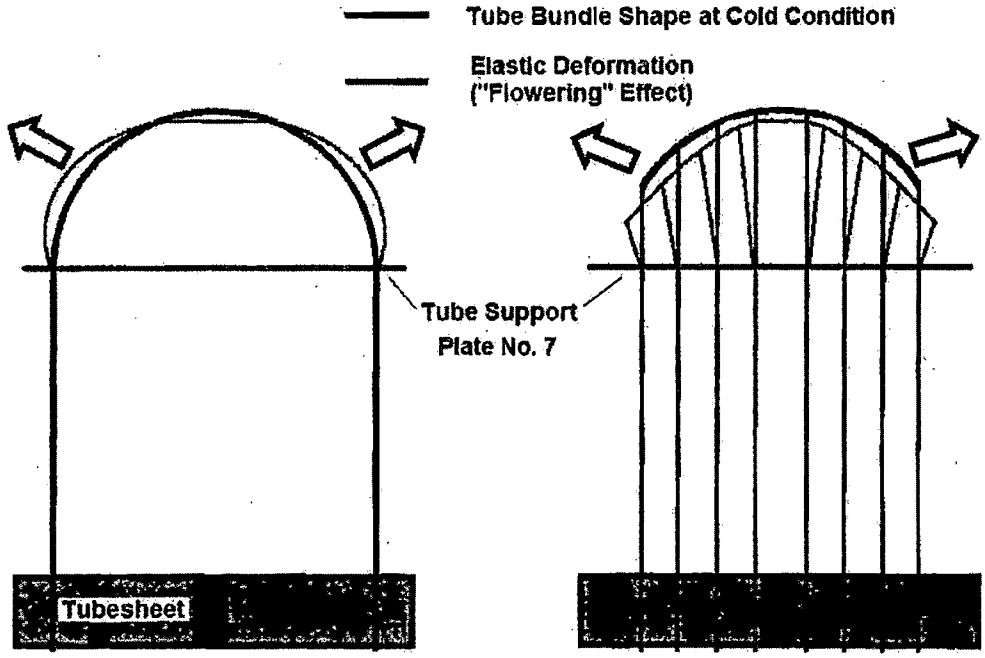


Description of "Flowering" Effect (Conceptual Drawing – For Illustration Purposes Only)

Mitsubishi considered that the collective contribution of the factors described above resulted in conditions in the U-bend that were highly susceptible to excessive tube vibration. The in-plane vibration of the tubes in the U-bend region allowed direct contact between free-span sections of the tubes, resulting in the unanticipated tube-to-tube wear.

At the conclusion of the onsite portion of this inspection, Mitsubishi was further evaluating the failure mechanism by conducting in-depth analyses of available data to validate their failure mechanism theory. One of the analyses included analytical studies of the impact of anti-vibration bar gap size, free-span length, fluid-elastic vibration, and contact forces on tube wear depth. An expected outcome of this analysis was that

contact forces and the number of inactive supports should be the biggest contributors to wear under fluid-elastic instability conditions. Additionally, Mitsubishi was conducting further analytical studies of the "flowering" effect by modeling multiple cases of elastic displacement of the tube bundle structure, taking into consideration thermal expansion and dynamic pressures. Concurrent with these analyses, Mitsubishi was studying the effect of manufacturing dispersion on tube wear. Specifically, Mitsubishi was modeling multiple cases of manufacturing variability to study the influence of different dimensional controls on gap and contact forces. Mitsubishi was using as-built data as well as manufacturing tolerances to statistically assess the impact of dimensional controls on the resulting gaps and contact forces in different areas of the tube bundle. One of the expected outcomes of this analysis was that manufacturing variability in Unit 3, in combination with the "flowering" effect, would result in a reduction of contact forces in Unit 3 relative to those in Unit 2. During the on-site portion of this inspection, the results of these studies were not finalized and additional failure analysis tasks were scheduled to accurately characterize the failure mechanism and support the cause determination.

At the time of the exit, Mitsubishi was still completing their independent cause analysis. As part of the Confirmatory Action Letter inspection, the final Mitsubishi cause evaluation will be reviewed.

3.0 Operational Differences in Configuration and Operation between Unit 2 and 3 (Charter item 3)

a. Inspection Scope

The team reviewed Unit 2 and 3 Cycle 16 operational data records found in operator logs and the plant computer system. The team focused on differences in configuration and operation between Units 2 and 3. The team evaluated full power operational data between Unit 2 and Unit 3 steam generators after each were replaced. From this data the team compared key plant parameters and other indications such as temperature, flow, power, pressure, and vibration and loose parts monitoring alarms. The team reviewed operational differences between Units 2 and 3 in order to gain information and to assess if these differences could have had an impact on the observed differences in the steam generator tube wear between the units.

b. Observations and Findings

No findings were identified.

The team looked at a number of operational differences from the perspective of the thermal-hydraulic disparities. The team also evaluated the significance of these differences insofar as potential impact to tube degradation. It was noted that Unit 3 ran with slightly higher primary temperatures, about 4°F higher than Unit 2. Other differences were noted in steam and feedwater flow but none of the differences were considered sufficient to significantly affect thermal hydraulic characteristics inside the steam generators. In addition, the team also identified that Unit 3 steam generators had numerous valid vibration and loose parts monitoring system alarms compared to Unit 2 steam generators.

(1) Introduction: The team identified an unresolved item associated with the number of valid vibration and loose parts alarms observed in Unit 3 steam generators compared to Unit 2 steam generators, during steady state conditions.

Description: During the review of operational differences between Unit 2 and 3 steam generators the team identified a significant difference in number of valid vibration and loose parts monitoring system alarms. The vibration and loose parts monitoring system was designed to provide continuous monitoring and conditioning of loose parts accelerometer signals. Two separate accelerometers were installed on each of the steam generators. The location of these instruments are on the steam generators' lower supporting structures and provide acoustic information about loose parts impacts specifically on the reactor coolant or primary side of the steam generators. The vibration and loose parts monitoring system real time functions consist mainly of impact alarm validation of suspected loose part events and recording acoustic data. Long term vibration monitoring and loose part event trending were done by engineering personnel using recorded data.

Unit 3 returned to service in February 2011, and the resident inspectors noted a number of nuclear notifications associated with Unit 3 steam generators vibration and loose parts monitoring alarms. On January 20, 2012, prior to the Unit 3 tube leak, engineering personnel also identified this trend and documented in Nuclear Notification NN 201818719 this problem and assigned an action to do further evaluation. On February 3, 2012, engineering personnel sent two sets of alarm signatures to Westinghouse, which contained impact data on alarms for time periods of steady state operation (i.e., no major temperature changes). Westinghouse engineering personnel concluded that the acoustic signals picked up by the accelerometers were valid and similar in nature to acoustic signatures caused by thermal movement of a steam generator expected during changes in thermal conditions, such as plant startup or shutdown. However the data obtained and analyzed had been taken during steady state operations. The team noted that Unit 2 steam generators did not receive the same number and type of alarms during a similar period of steady state operations. Engineering personnel also compared hot leg temperature changes linked to Unit 3 operations from February 18, 2011, to January 31, 2012, and confirmed about 30 valid alarms during this period were not associated with thermal transients.

Additional review and follow up will be required of the vibration and loose parts monitoring system alarms, including evaluation and disposition of Unit 3 alarms and then determine whether this issue represents a performance deficiency or constitutes a violation of NRC requirements. This issue is identified as URI 05000362/2012007-02, "Evaluation of Unit 3 Vibration and Loose Parts Monitoring System Alarms."

(2) Introduction: The team performed a number of different thermal-hydraulic analysis of Units 2 and 3 steam generators. The output of the various analyses runs where then compared and reviewed to determine if those differences could have contributed to the significant change in steam generator tube wear.

Description: The NRC conducted a number of different thermal-hydraulic analyses, including:

- Lower bounding thermal hydraulic analysis using the steam generator base design condition, where primary inlet temperature was 598°F, and an upper bound case where primary inlet temperature was 611°F as identified in Mitsubishi Document L5-04GA021, Revision 3
- Varying steam generator pressures from 833 to 942 psia
- Steam mass flow rates from 7.59 to 7.62 Mlbm/hr
- Primary loop volumetric flow rate from 102,000 to 104,000 gpm, and
- Recirculation ratio from 3.2 to 3.5.

The result of the independent NRC thermal-hydraulic analysis concluded that differences in the actual operation between units and/or individual steam generators had an insignificant impact on the results and in fact, the team did not identify any changes in steam velocities or void fractions that could attribute to the differences in tube wear between the units or steam generators. It should be noted that increases in primary temperature and steam generator pressures has the effect of reducing void fractions and peak steam velocities, which slightly decreases the conditions necessary for fluid elastic instability and fluid-induced vibration.

4.0 Design and Manufacturing Differences (Charter Item #4) (Mitsubishi Charter Item 1)

During the development of the charter, it was not known how SCE and Mitsubishi reviewed and approved design and manufacturing changes. During the inspection, it was identified that all design and manufacturing changes proposed by Mitsubishi required review and approval from a SCE representative. Based on this, it was determined that this area could be covered as one item.

a. Inspection Scope

The team interviewed licensee and Mitsubishi personnel involved in the design and fabrication of the replacement steam generators and reviewed information including nonconformance reports, design drawings, fabrication procedures, design changes, engineering evaluations, supplier deviation requests, and design specifications to identify conditions affecting quality that resulted in relevant design differences between the replacement steam generators. The team assessed whether these differences could be considered as contributing factors for the cause of the tube-to-tube wear issue in Unit 3. The team also reviewed Engineering Change Packages 800071702 and 800071703 for the Unit 2 and Unit 3 replacement steam generators, respectively, with emphasis on changes made to the design methodology described in the updated final safety analysis report for the original steam generators to verify that the evaluation was performed in accordance with licensee procedures and the provisions of 10CFR 50.59, "Changes, Tests, and Experiments."

b. Observations and Findings

No findings were identified.

The team identified two unresolved items for which additional information is required to determine if performance deficiencies exist or if the issues constitute violations of NRC requirements. The team also identified several observations related to the design, fabrication, and the engineering change package for the Unit 2 and Unit 3 replacement steam generators.

1) Introduction: The team identified an unresolved item associated with the design of the retainer bars in Unit 2 and Unit 3 replacement steam generators.

   Description: In February 2012, the licensee identified wear indications in Unit 2 replacement steam generators at the tube locations in contact with the retainer bars (see figure below). Some of the indications showed excessive wear with a maximum degradation of 90 percent through wall.

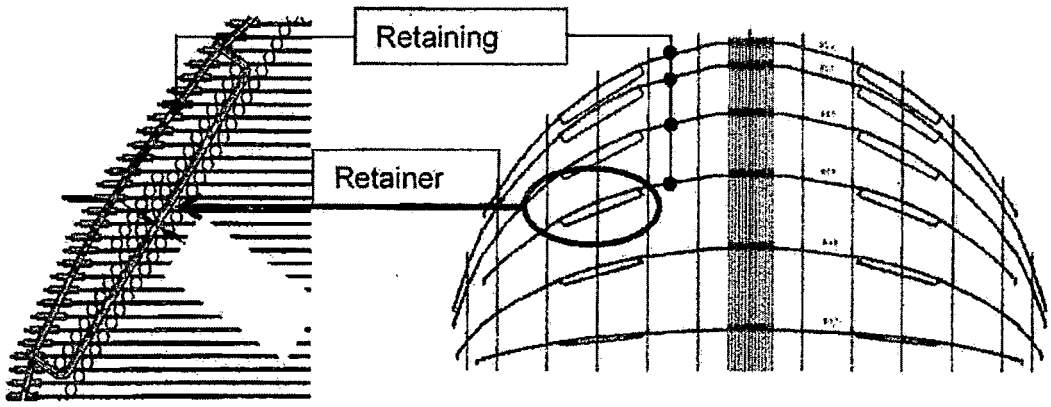


Retainer Bar Design and Location of Affected Tubes (For Illustration Purposes Only)

The team identified that the design of the replacement steam generators did not expect any potential vibration concerns in the area of the tube bundle where the retainer bars were located. The basis for Mitsubishi's design philosophy relied on the following factors:

- Based on the calculated natural frequency of the retainer bar, Mitsubishi considered that there would not be a resonant vibration condition relative to the flow conditions in the location of retainer bars.
- The vibration analysis of the tube bundle only considered out-of-plane vibration because in-plane vibration was not expected to be an operational concern for the retainer bars.
- The outermost tubes were considered the least susceptible to flow-elastic instability; therefore retainer bar locations were not included in the vibration analysis.
- Fluid-elastic instability was found not applicable to the retainer bar because this mechanism did not apply to a single tube in cross flow.

- Vortex-induced vibration was found not applicable to the retainer bar because it was considered a vibration mode applicable to a single cylinder in uniform cross flow in a large area and the flow condition around the retainer bars was considered slug-froth two phase flow.

However, upon identification of retainer bar-to-tube wear in Unit 2 replacement steam generators, Mitsubishi performed an evaluation to identify the cause of excessive wear. The analysis considered three vibration mechanisms: fluid-elastic instability, vortex-induced vibration, and turbulence-induced vibration (random vibration). The analysis for turbulence-induced vibration determined that random vibration was the possible cause of the retainer vibration, based on the peculiar flow around the retainer bar, combined with the rather low natural frequency of the retainer bar. The analysis used the two phase flow conditions around the retainer bars and identified various modes of vibration at those flow conditions that could lead to retainer bar vibration and consequently to tube wear.

Additional review by the NRC is required following completion of the licensee's cause evaluation to determine whether this issue represents a performance deficiency or constitutes a violation of NRC requirements. This issue is identified as URI 05000362/2012007-03, "Evaluation of Retainer Bars Vibration during the Original Design of the Replacement Steam Generators."

2) Introduction: The team identified an unresolved item associated with the dimensional controls of critical dimensions throughout the fabrication of Unit 2 and Unit 3 replacement steam generators.

Description: Based on the information gathered by the team on the differences in dimensional controls of critical parameters in Unit 2 and Unit 3 replacement steam generators, the team determined that Mitsubishi did not consider the potential impact of improving dimensional controls for tube roundness and anti-vibration bars on the final tube bundle clearances at normal operating conditions.

Additional review by the NRC is required following completion of the licensee's cause evaluation to fully assess how the dimensional controls contributed to the tube-to-tube wear in Unit 3 and then determine whether this issue represents a performance deficiency or constitutes a violation of NRC requirements. This issue is identified as URI 05000362/2012007-04, "Evaluation of Changes in Dimensional Controls during the Fabrication of Unit 2 and Unit 3 Replacement Steam Generators."

3) Design Differences: The team did not identify any significant differences in the design requirements of Unit 2 and Unit 3 replacement steam generators. The "Conformed Specification for Design and Fabrication of the Replacement Steam Generators," also known as the design specification, contained identical technical requirements for Unit 2 and Unit 3 steam generators. All replacement steam generators were required to be designed, fabricated, and tested in accordance with the 20?? edition of the American Society of Mechanical Engineers (ASME) Boiler and Pressure Vessel Code, industry standards, and NRC endorsed methods described in applicable regulatory guides. The licensee specified the same licensing requirements for all replacement steam generators.

The design specification also contained provisions to address technical or quality deviations from the requirements of the purchase order or the design specifications, including the disposition of "Repair" or "Accept as-is" conditions captured as non-conformance reports in Mitsubishi's quality assurance program and changes to documents previously approved by the licensee. This process was referred to as "Supplier Deviation Request" and allowed the licensee to review and approve deviations from the approved design specifications. The team noted that changes affecting the specified design were submitted to SCE personnel for review and approval.

The team noted that the design specification established identical provisions for the design of the replacement steam generator components including the vessel, upper/lower shell, transition cone, tubesheet, channel head, divider plate, tube supports, tubing, steam nozzle, feedwater nozzle, primary nozzles, steam flow limiting device, moisture separators/dryers, feedwater distribution system, blowdown and sludge management, access/inspection ports, instrument/sampling taps, and loose part monitoring.

The design specification also established identical requirements for the service life and service environmental conditions of the replacement steam generators. The licensee also specified identical design loading, structural, and seismic requirements for all replacement steam generators. The design specification contained identical requirements for design transients under normal, upset, emergency, faulted, and test conditions.

Additionally, the performance requirements in the design specification were identical for each replacement steam generator, which included:

- Water Level Stability
- Circulation Ratio
- Moisture Carryover
- Steam Carryunder in the Downcomer Annulus
- Reactor Coolant Flow Rate
- Primary-To-Secondary Leakage
- Blowdown Capacity
- Thermal Rating
- Heat Transfer Surface Area
- Tube Plugging Margin
- Fouling Factor
- Overall Heat Transfer Coefficient
- Primary Side Design and Operating Pressure/Temperatures
- Secondary Side Design and Operating Pressures/Temperatures
- Primary Side Design and Operating Flows
- Secondary Side Design and Operating Flows
- Tube Material and Dimensions

The replacement steam generator design developed by Mitsubishi for SONGS Unit 2 and Unit 3 in accordance with the licensee's design specification was translated into the same set of design and fabrication drawings. The team noted that some as-built dimensions varied between Unit 2 and Unit 3 steam generators as a result of the divider plate weld repairs in Unit 3 and other manufacturing processes. However, these dimensional changes did not represent significant deviations from the original design specifications. Therefore, the team determined that no significant differences existed in the design requirements of Unit 2 and Unit 3 replacement steam generators.

4) Fabrication Differences: The team noted that the design specification contained the same general fabrication requirements for the Unit 2 and Unit 3 replacement steam generators. The design specification contained the methods required for fabrication, assembly, inspection, and testing of the replacement steam generators. The specification covered, in part, fabrication requirements for the channel head cladding, tube dimensions, tube wall thickness, tube bend radius, tube "ovality," tubesheet, tube-to-tubesheet joints, tube supports, tube bundle, machined gasketed surfaces, non-ASME steam generator internals, welding methods, post-weld heat treatment, and allowable welding materials. The specification also contained detailed requirements for inspections, tests, and examinations, which included examination methods and personnel qualification requirements.

   The design specification also required the use of "Supplier Deviation Requests" to address technical or quality deviations from the requirements of the Purchase Order or the design specifications, including the disposition of "Repair" or "Accept as-is" conditions identified during the fabrication process and changes to fabrication documents previously approved by the licensee. The team noted that fabrication issues affecting the specified design were submitted to SCE personnel for review and approval.

   Based on discussions with SCE and Mitsubishi personnel and the review of documentation about the fabrication history of Unit 2 and Unit 3 replacement steam generators, the team identified the differences listed below. At the conclusion of the onsite portion of this inspection, the differences between Unit 2 and Unit 3 steam generators as a result of the fabrication process were under consideration for the cause evaluation.

   - Steam Dryer Assembly – During the fabrication of Unit 2 steam generator 2E0-89, Mitsubishi identified a nonconforming condition of the steam dryer assembly that included damaged locking plates of vane jacking devices, displaced bolts, and damaged vanes. The cause of this issue was determined to be inadequate evaluation and control of the design in regard the capacity of the vane jacking devices to sustain all fabrication conditions. Specifically, the vane jacking devices failed to stay in the design position during multiple rotations of the steam generator assembly during fabrication. Mitsubishi corrected the condition, in part, by replacing all vane jacking devices and damaged vanes with a new design, which was also used in the fabrication of the Unit 2 steam generator 2E0-88, and Unit 3 steam generators 3E0-89 and 3E0-88. Additionally, Mitsubishi modified the assembly sequence of the steam dryers.

For Unit 2 steam generator 2E0-89, the steam dryer vanes were assembled in-situ while the steam dryers for Unit 2 steam generator 2E0-88 and Unit 3 steam generators 3E0-88 and 3E0-89 were preassembled before installation in their final position.

- Drilling of Tubesheet Holes – The tubesheet holes in Unit 2 and Unit 3 steam generators where the tubes are inserted for final assembly were made with different drill bits. The Unit 2 steam generator tubesheets were drilled with uncoated drill bits. The Unit 3 steam generator tubesheets were drilled with titanium-nitride coated drill bits, which improved the drill bit life and resolved tooling mark issues experienced in Unit 2.

- Transition Wrapper Welding – The welding of the transition wrapper was performed in different order for each unit. For Unit 2 steam generators, the transition wrapper was welded after the tubes and anti-vibration bars were installed. In Unit 3 steam generators, the transition wrapper was welded before the installation of tubes and anti-vibration bars.
- Cladding Removal Process for the Channel Head – The removal of the stainless steel clad weld from the interior surface of the channel head base metal in preparation for the divider plate weld (i.e. structural butter weld) was performed with different methods in Unit 2 and Unit 3 replacement steam generators. For Unit 2, Mitsubishi used a machining process to remove the cladding in both steam generators. In Unit 3, Mitsubishi used an air carbon-arc gouging process. This method resulted in separation of the butter weld during hydrostatic testing. The root cause evaluation concluded that the air carbon-arc gouging process left carbon deposits on the base metal. Gouging was followed by grinding which was designed to remove the heat affected zone and expected to completely remove the carbon deposits. However, the grinding process left carbon deposits behind, which resulted in the localized areas of high carbon and high base metal hardness due to carburization. The repair of the Unit 3 divider plate welds is addressed in further details in Section 12.0 of this report.

- Helium Leak Test – As part of the fabrication process, Mitsubishi performed a Helium-Nitrogen leak test on the secondary side of the replacement steam generators to check for leaks on the tube-to-tubesheet welds. For all steam generators, this test was performed after completion of the tube-to-tubesheet weld, but prior to the penetrant examination of the tube-to-tubesheet welds and final tube expansion. The leak tests for Unit 2 steam generators were performed at a higher pressure than Unit 3 steam generators. Additionally, the Unit 2 tests were performed using a temporary welded cap on top of the steam generator shell to enclose the secondary side, while a temporary clamped cap was used in Unit 3 steam generators. All tests required the same holding time before starting the test and the same leak rate acceptance criteria.

- Preliminary and ASME Section III Hydrostatic Tests – The number of hydrostatic tests performed in accordance with ASME Section III on the primary and secondary sides of the replacement steam generators varied between Units due to the results of the initial test in each steam generator. For each replacement

steam generator, the hydrostatic tests were performed first on the primary side and then on the secondary side. Both Unit 2 steam generators met the acceptance criteria in the first hydrostatic test. However, during the first hydrostatic test on the secondary side of Unit 3 steam generator 3E0-89, Mitsubishi identified leakage through a tube-to-tubesheet weld that exceeded the ASME Code acceptance criteria. After repairs were completed to address the leakage, the hydrostatic tests were re-performed. Following the second set of hydrostatic tests on Unit 3 steam generator 3E0-89, cracking indications were identified in the divider plate-to-channel head weld. After repairs were completed to address the divider plate weld cracks, a third set of hydrostatic tests were performed in Unit 3 steam generator 3E0-89. Since similar cracking indications of the divider plate weld were identified in Unit 3 steam generator 3E0-88, a second set of hydrostatic tests was performed in this steam generator after the divider plate weld was repaired.

Additionally, prior to each ASME Section III hydrostatic test, Mitsubishi performed a preliminary hydrostatic test of the primary and secondary side of the steam generators at design pressure to check for leakage at the feed pump, pressure filling line, temporary gaskets, and temporary seals. Therefore, each replacement steam generator received an equal number of preliminary and ASME Section III Hydrostatic Tests. The total numbers of hydrostatic tests for each steam generator are summarized below.

| **Number of Preliminary and ASME Section III Hydrostatic Tests** | | | |
|---|---|---|---|
| **Steam Generator** | **Primary Side** | **Secondary Side** | **Results** |
| 2E0-89 | 1 | 1 | Acceptance criteria met |
| 2E0-88 | 1 | 1 | Acceptance criteria met |
| 3E0-89 | 1 | 1 | Leakage detected in tube-to-tubesheet weld |
| | 1 | 1 | Divider plate weld separation weld identified |
| | 1 | 1 | Final – Acceptance criteria met |
| 3E0-88 | 1 | 1 | Divider plate weld separation weld identified |
| | 1 | 1 | Final – Acceptance criteria met |

- Pre-Service Inspection – The design specification established similar requirements for the pre-service eddy current examination of Unit 2 and Unit 3 replacement steam generators. The team noted that the eddy current examinations of Unit 2 and Unit 3 steam generators were performed with similar eddy current techniques, including essential variables. However, the circumstances in which the examinations were performed varied for each Unit. For Unit 2, the pre-service examination was performed after the steam generators were delivered at the SONGS jobsite. The steam generators were examined on the shipping saddles, where the position of the tube bundle was at 45 degrees from the gravity neutral position. This position was dictated by the

location of the steam generator lifting trunnions which were installed on the upper shell at 45 degree orientation from the steam generator centerline. For Unit 3, the pre-service eddy current examination was performed at the Mitsubishi Kobe facility while the steam generators were still on the fabrication rollers and in the gravity neutral position (i.e. divider plate oriented horizontally). The decision to perform the Unit 3 pre-service examination at the Mitsubishi facility was dictated by delivery schedule considerations resulting from the divider plate weld repairs.

- Flow Limiter for Primary Inlet Nozzles – The replacement steam generators were designed with a flow limiter located in the primary inlet nozzle (see figure below) in order to make the reactor coolant system flow similar to the flow rate of the original steam generator and not exceed the maximum allowable reactor coolant system flow rate. The licensee's evaluation for the engineering design package determined that although the original steam generators had a number of plugged tubes, the reactor coolant system flow rate of the original steam generators was near the design requirement. Because the replacement steam generators has 377 more tubes than the original steam generators, and contained tubes with u-bends versus "square bends", the pressure drop of the replacement steam generators with no plugged tubes would be much less than the original steam generators resulting in a higher flowrate.

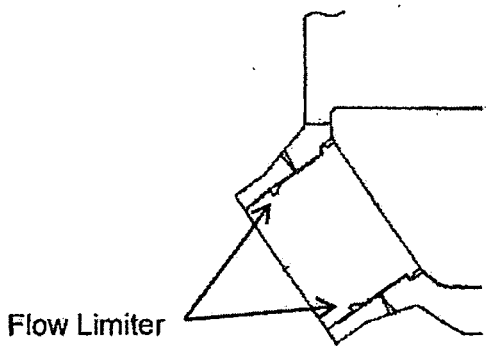


Replacement Steam Generator Primary Inlet Nozzle (For Illustration Purposes Only)

The flow limiter was designed to ensure the total "best estimate" reactor coolant flow rate with the replacement steam generators installed would not exceed 106.5 percent of the design volumetric flow rate of 396,000 gallons per minute at a reactor coolant system cold leg temperature of Tcold = 540.9°F. For Unit 2 replacement steam generators, the flow limiter diameter to nozzle inner diameter ratio was 0.94 while the ratio for Unit 3 steam generators was 0.915 due to Unit ? reactor coolant pump replacement. The flow limiter dimensions resulted from a scaled model test performed by Mitsubishi and it was designed to be machined as part of the nozzle base metal.

- Pitch Distance of Tube Support Plate Drilled Holes in Unit 2 Steam Generator 2E0-89 – During fabrication of the tube support plates for Unit 2 steam generator 2E0-89, quality control inspections identified unacceptable measurements of the pitch distance between drilled holes. Mitsubishi fabrication procedures required verification of the total center-to-center distance between ten inline drilled holes

at certain sample points of the tube support plate. The dimensional verification checks identified a total of 200 measurements in tube support plate number 3 and 10 measurements in tube support plate number 6 that did not meet the dimensional acceptance criteria established in the fabrication procedures. Mitsubishi evaluated this non-conformance condition and accepted the condition "as-is" with the SCE's approval. The technical justification for accepting the condition addressed four elements: (a) the impact of the condition on the ability to insert the tubes through the affected areas of the tube support plates, (b) resulting stress on the tubes after insertion, (c) impact of the condition on the tube to anti-vibration gap size, and (d) possible occurrence of tube scratch during inspection. Similar unacceptable measurements were not identified in Unit 2 replacement steam generator 2E0-88 or Unit 3 replacement steam generators 3E0-89 and 3E0-88.

- Tube-to-Tube Clearance in Unit 2 steam generator 2E0-89 – During fabrication of Unit 2 replacement steam generator 2E0-89, interference checks identified that the clearance between the tubes in Rows No. 28 and 30 in Column No. 22 was less than the minimum clearance of 0.13-inch specified in Mitsubishi's inspection procedure. The condition was accepted "as-is" by Mitsubishi and SCE through the supplier deviation request process. The main considerations of the technical evaluation included: (a) thermal expansion difference, (b) tube expansion due to operating pressures, (c) tube displacement due to out-of-plane flow induced vibration, and (d) tube displacement due to seismic acceleration. The team noted that no tube-to-tube wear indications were identified in this area of the tube bundle.

- Anti-Vibration Bar Spacing Issues in Unit 2 Steam Generator 2E0-89 – During fabrication of Unit 2 replacement steam generator 2E0-89, quality control inspections identified unacceptable gaps between tubes and the anti-vibration bars in the outside tube columns. The affected area was identified as welding zone-4. The apparent cause for the anti-vibration bar spacing issue was due to performing the welding of zone-4 while the steam generator was oriented horizontally with this welding zone oriented to the bottom of the bundle. In this configuration, the tube bundle experienced sagging at the time of welding due to gravity. After completion of welding zone 4, the steam generator assembly was rotated 180 degrees for additional assembly steps, but the sagging in the opposite direction caused enlargement of the gaps in welding zone 4 and this enlargement remained approximately the same for all subsequent rotations. When zone-4 was rotated 180-degrees after welding, deflection or sagging of the tube retaining bars due to gravity slightly pulled the anti-vibration bars, increasing the gap between the tube and the anti-vibration bars in this zone.

  With the licensee's approval, Mitsubishi implemented various corrective actions to address the condition in the pending Unit 2 replacement steam generator 2E0-88 and subsequently in Unit 3 steam generators which included: (a) use of smaller spacer blocks between tubes for the installation of anti-vibration bars, (b) re-define the welding zones to limit welding in the horizontal position, and (c) reduce rotations during welding of the other bundle zones. Mitsubishi performed rework activities in Unit 2 steam generator 2E0-89 to restore anti-vibration bar

spacing to design specifications. These activities resulted in better gap distribution. All the tube-to-anti-vibration bar gaps exceeding the initial dimensional criteria were further evaluated and accepted in accordance with Mitsubishi's gap size evaluation procedure.

- Rotations of Steam Generator Assembly for Anti-Vibration Bar Installation and Welding – The team noted that welding of anti-vibration bars structure required rotating the steam generators several times. As a result of the corrective actions generated to address the anti-vibration bar spacing issues in Unit 2 steam generator 2E0-89, the installation procedure was revised to reduce the number of rotations for anti-vibration bar installation to attain better gap control. This procedure revision resulted in different number of rotations in each replacement steam generator. Steam generators Unit 2 E0-89, Unit 2 E0-88, Unit 3 E0-89, and Unit 3 E0-88 received 11.25, 4, 3.5, and 3.5 rotations, respectively, during installation of the anti-vibration bars structure.

- Temporary Installation of Plastic Ties – In order to limit the displacement of anti-vibration bars during rotation of the steam generator assembly for welding of the anti-vibration bars structure, Mitsubishi revised the installation procedure to install temporary plastic ties between the retaining bars and the tubes. This step of the anti-vibration bar assembly process was performed in a different sequence for Unit 2 and Unit 3 steam generators. For Unit 2, the installation of plastic ties occurred after welding the transition wrapper, the Helium leak test, and tube hydraulic expansion, but before welding the channel head to the tubesheet, the hydrostatic tests, and the pre-service inspection. In Unit 3, the installation of plastic ties was performed between welding the transition wrapper and the Helium leak test.

- Dimensional Controls of Anti-Vibration Bar Structure – According to Mitsubishi's preliminary cause evaluation taking place at the time of this inspection, the controls of critical dimensions affecting the clearances between the tube and the anti-vibration bars were gradually improved throughout the fabrication of the Unit 2 and Unit 3 steam generators. This improvement on dimensional controls was a consideration for the determination of the failure mechanism leading to tube-to-tube wear in Unit 3.

  The first dimensional control under consideration was the improvement of tube roundness in the section of the tubes that was bent to form the U-bend shape. During fabrication of Unit 2 steam generator 2E0-89, the supplier of tubular product for Mitsubishi (i.e. Sumitomo), experienced quality issues to meet the G-values established in the design specifications, resulting in a high number of tube rejections. The G-value was a measure of departure from roundness, or "ovality," after the tubes were bent and it was controlled in order to control the gap between tubes and anti-vibration bars (see figure below). The G-values were measured at different locations along the U-bend section of the tubes for a selected number of tubes per row, as established in Mitsubishi's procedure. The acceptance criteria for G-value varied depending on the row where the tubes were installed. The acceptance criteria also remained the same throughout the fabrication of Unit 2 and Unit 3 replacement steam generators.

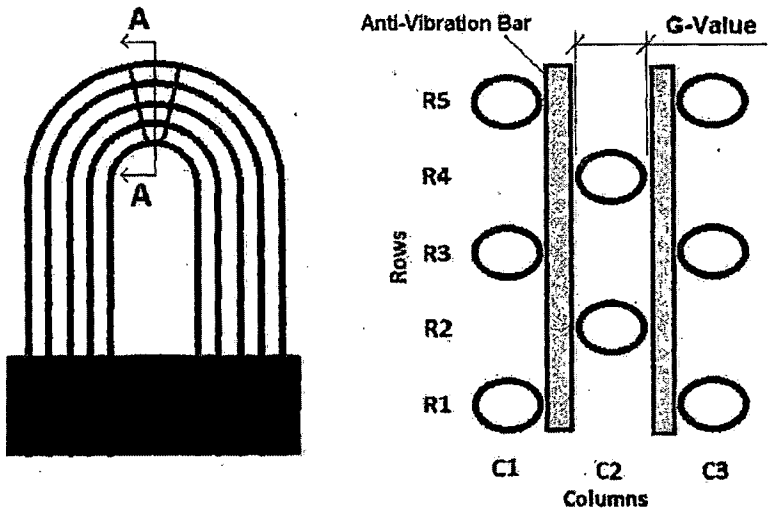


**Section A-A**

**Description of G-Value Parameter (Conceptual Drawing – For Illustration Purposes Only)**

Based on discussions with licensee personnel and documentation reviews, the team noted that Sumitomo implemented measures to improve the quality of the tube bending process which resulted in less deviation of G-values and a reduction in the amount and variability of tubing "ovality." Based on the statistical analysis of G-value data collected during fabrication of the Unit 2 and Unit 3 steam generators, Mitsubishi concluded that the G-values gradually decreased since the fabrication of the first steam generator.

Another dimensional control under consideration was the variability of anti-vibration bar dimensions. Mitsubishi's fabrication procedures required inspection of various dimensions of the anti-vibration bars to control the gap between the anti-vibration bars and the tubes. These dimensions were: thickness in the straight sections, twisting and flatness of the straight sections after bending, and thickness of the anti-vibration bar tip (i.e. nose) after bending. Among these dimensions, the twisting and flatness of the straight sections after bending were verified using a "Go or No-Go" approach based on the acceptance criteria in Mitsubishi's procedures but no specific measurements were required to be maintained by procedure. Additionally, the acceptance criteria for anti-vibration bar dimensions remained the same throughout the fabrication of Unit 2 and Unit 3 replacement steam generators. Mitsubishi conducted a preliminary statistical analysis of the available dimensional data for anti-vibration bars and the team concurred that there were minor differences in the statistical distribution of these dimensions in Unit 2 and Unit 3 steam generators.

Comn
any de
[gew]
inform

Engineering Change Package (10 CFR 50.59): The team determined that the licensee's evaluation for changes in the updated final safety analysis report's design methodologies for the replacement steam generators was consistent with SONGS

procedures for the implementation of 10 CFR 50.59 requirements. The licensee's evaluation contained in Engineering Change Packages 800071702 and 800071703 for the Unit 2 and Unit 3 replacement steam generators, respectively, determined that the replacement of the original steam generators did not affect the current licensing basis to the extent of needing prior approval from the NRC as required by 10 CFR 50.59.

In the 50.59 screening evaluation associated with the engineering change package for the Unit 2 and Unit 3 replacement steam generators, the licensee determined that the proposed activity did not adversely affect a design function, or the method of performing or controlling a design function described in the updated final safety analysis report. The licensee also determined that the steam generator replacement activity did not change a procedure in a manner that adversely affected how an updated final safety analysis report design function is performed or controlled. Additionally, the licensee determined that the steam generator replacement activity did not involve a test or experiment not described in the updated final safety analysis report. The licensee evaluated the following updated final safety analysis report design functions in the 50.59 screening:

- Steam Generator Design Functions
- Reactor Coolant System Structural Integrity
- Emergency Core Cooling System Performance
- Non-Loss of Coolant Accident Transients
- Containment Pressure-Temperature Analysis
- Low Temperature Overpressure Protection
- Reactor Protection System, Engineered Safety Features Actuation System, Core Operating Limit Supervisory System, and Core Protection Calculations
- Nuclear Steam Supply System Performance
- Non-Safety Related Control Systems Performance

However, the 50.59 screening evaluation identified three methods of analysis described in the updated final safety analysis report that were affected by the proposed steam generator replacement and required further evaluation against the criteria in 10 CFR 50.59. The affected methodologies are described below:

- Seismic Analysis of Reactor Vessel Internals – The original analysis of SONGS Unit 2 and Unit 3 reactor vessel internals with the original steam generators was performed with the methodology described in Combustion Engineering Topical Report CENPD-178, "Structural Analysis of Fuel Assemblies for Combined Seismic and Loss of Coolant Accident." Subsequent to the submittal of this report, Combustion Engineering revised the methodology by modifying modeling techniques, computer codes, testing methods, and acceptance criteria in response to changes in licensing requirements. Consequently, the original report was resubmitted to the NRC as CENPD-178-P, Revision 1-P, August 1981. This revision was approved by the NRC in a Letter from H. Bernard to A. Scherer, "Acceptance for Referring of Licensing Topical Report CENPD-178," dated August 6, 1982. The licensee used this revised methodology for the replacement

steam generators and considered it as a methodology approved by the NRC for the intended application.

- Reactor Coolant System Structural Integrity – The structural analysis of the original steam generators used ANSYS software for the thermal and stress analyses while the replacement steam generators were analyzed using ABAQUS software. ANSYS was described in the updated final safety analysis report as a large-scale, general-purpose, finite element program for linear and nonlinear structural and thermal analysis of the reactor coolant loop components. The licensee considered ABAQUS to be similar to ANSYS. The licensee compared both programs using thermal and stress sample problems. The comparison demonstrated that the results varied from theoretical solutions by no more than 1 percent, and ABAQUS and ANSYS results themselves were also within 1 percent of each other. The variability of results was determined to be within the margin of error for the subject type of analysis.

- Tube Wall Thinning Analysis – The original steam generator analysis used CEFLASH computer program for the main steam line break mass-energy blowdown analysis, whereas the replacement steam generator analysis used manual calculations to represent the main steam line break blowdown loads by applying the maximum possible tube differential pressure, which bounded the pressure calculated by CEFLASH.

  For loss of coolant accident analysis, the original steam generator used STRUDL computer program to calculate displacement histories and then ANSYS computer program to calculate tube stresses. The tube stresses for the replacement steam generators were determined using ANSYS computer program based on the blowdown forces. For the original steam generators the combination of loads analyzed was primary loop pipe break plus design basis earthquake and main steam line break plus design basis earthquake. For the replacement steam generators, the loss of coolant accident, design basis earthquake, and the main steam line break events were combined as one limiting event, which SCE considered to be a more conservative method of evaluation relative to the original steam generators. The licensee determined that the results of the tube wall thinning analysis for the replacement steam generators were conservative or essentially the same and the methodology used did not represent a departure from a method of evaluation described in the updated final safety analysis report.

Further discussion is contained in Section 13.0 of this report on the methodology used by the licensee for the reactor coolant system structural integrity and tube wall thinning analysis.

The team noted that a key methodology for the design of the original and replacement steam generators was the thermal-hydraulic code used to model the flow conditions in the steam generators. The original steam generators were designed using ATHOS thermal-hydraulic code while the replacement steam generators were designed with a proprietary code from Mitsubishi (Need to verify this with Joel. Think the generators were designed before ATHOS was developed in 1985). Mitsubishi's code was accepted by SCE for the design of the replacement steam generators. The team noted that the updated final safety analysis report did

not specifically describe ATHOS as the code used for the design of the original steam generators and therefore the change in thermal-hydraulic code did not constitute a change in methodology or a change in an element of a methodology described in the updated final safety analysis report. The updated final safety analysis report did describe the computer code CRIB as the code used to analyze overall steam generator performance. As described in the updated final safety analysis report, CRIB was used to establish the recirculation ratio and fluid mass inventories as a function of power level in the original steam generators.

With regard to the major design changes between the original and replacement steam generators, the updated final safety analysis report did not specify how the original steam generators relied on special design features such as the stay cylinder, tubesheet, tube support plates, or the shape of the tubes to perform the intended safety functions. The description of the original steam generators was focused on the overall thermal performance characteristics and the applicable codes and standards used for fabrication. The updated final safety analysis report provided a brief description of the egg-crate tube support plate design and its function to prevent concentration of impurities in the tube-to-tube support plate gap, which could lead to tube degradation. The updated final safety analysis report also described degradation issues of the egg-crate tube support plate design as a result of flow-accelerated corrosion and the corrective actions taken to mitigate this degradation mechanism.

Regulatory Guide 1.187, "Guidance for Implementation of 10 CFR 50.59, Changes, Tests, and Experiments," November 2000, allows the use of NEI 96-07, "Guidelines for 10 CFR 50.59 Implementation," Revision 1 for methods that are acceptable for complying with 10 CFR 50.59. Per NEI 96-07, changes affecting structures, systems, or components that are not explicitly described in the updated final safety analysis report can have the potential to adversely affect structure, system, or component design functions that are described and thus may require a 10 CFR 50.59 evaluation. Consistent with this guidance, SCE's 50.59 screening evaluated the differences in subcomponents between the original steam generators and replacement steam generators as to whether the differences adversely affected the design function (reactor coolant pressure boundary) of the steam generators. The replacement steam generators were designed and fabricated in accordance with quality assurance requirements, and 10 CFR 50.59 does not require the licensee to presume deficiencies in the design or fabrication.

Based on the updated final safety analysis report description of the original steam generators, one unresolved item associated with the 50.59 review was identified and is discussed in Section 13.0 of this report.

## 5.0 Quality Assurance/Quality Control (Charter Item 5) (Mitsubishi Charter Item 4)

The team reviewed numerous documents from both SCE and Mitsubishi (including sub-contractors, such as Sumitomo) associated with the design, fabrication, and manufacturing of the steam generators for both units. The team reviewed SCE and Mitsubishi's quality assurance program, procedures and implementation activities for the control of purchased material, equipment, and services; inspections; procurement

document control; and corrective action and nonconformance activities. Specifically, the team reviewed a sample of Mitsubishi nonconformance reports, audit, survey, all SONGS condition action requests, audits, surveillances, stop work orders, and supplier deviation requests associated with the design and manufacturing of the steam generators. The team concluded that these portions of SCE and Mitsubishi's quality assurance program regarding its safety-related activities were appropriately controlled and implemented.

5.1 SONGS Quality Assurance/Quality Control

a. Inspection Scope

The team reviewed SCE's implementation of their quality assurance program to determine if it complied with the requirements of 10 CFR 50, Appendix B, "Quality Assurance Criteria for Nuclear Power Plants and Fuel Reprocessing Plants." The team reviewed SONGS implementing procedures, quality assurance manual, vendor audits, procurement specifications, corrective action requests, and numerous other documents, as well as interviewed a number of quality assurance/control and engineering personnel to determine the appropriateness of activities affecting quality conducted during fabrication, manufacturing and delivery of the replacement steam generators.

b. Observations and Findings

No findings were identified.

1) Policies and Procedures for Supplier Selection and Control

The team reviewed Quality Assurance Manual, Section 17.2.7, "Control of Purchased Material and Services," which defines the process used to ensure that purchased material, source material, and subcontracted services conform to applicable codes and standards. Section 17.2.7.2 of the quality assurance manual provided measures for the approval and control of suppliers and describes the methods that SCE uses to conduct technical and quality assurance evaluations of potential suppliers. Specifically, SCE evaluated an audit performed by Dominion (DA 2002-92, "Dominion Audit of Mitsubishi Heavy Industries"). The evaluation was performed and documented in accordance with SONGS policies and implementing procedures that govern the control of purchased material, equipment, and services. The results of SCE Evaluation MHI-01-04, "Evaluation and Review of Contractor, Consultant, Utility or Licensee Audit Report," stated that Mitsubishi was conditionally qualified for the fabrication and design of the replacement steam generators. An audit was performed by SCE when a sufficient quantity of work had been performed to demonstrate implementation of Mitsubishi's quality assurance program. Southern California Edison-'s oversight of Mitsubishi also included verification of Mitsubishi's activities during fabrication, inspections, testing and shipment of the procured item. After approximately 14 months from the initial evaluation SCE removed the conditional qualification based on results from Evaluation MHI-10SV-05, "Source Evaluation Report of MHI," dated February 8, 2006, and MHI-3SV-06, "Source Verification Report of MHI," dated May 3 2006, and implementation and verification of specific corrective actions. Part of the SONGS oversight plan of Mitsubishi

included the placement of SCE quality assurance/quality control personnel (residents) at the Mitsubishi facility. Plan SGR-A10183, "Replacement Steam Generator Resident Oversight Plan," described the roles and responsibilities of the resident management, engineering, and quality oversight implementation strategy for the replacement steam generators. This oversight plan was created to provide reasonable assurance that the design, licensing, fabrication, delivery, and acceptance of the SONGS replacement steam generators were performed in accordance with specified SCE, industry, regulatory, and Code requirements. The team noted that after the resident was placed at Mitsubishi, Source Verifications and Surveillances performed by SCE decreased. After the NRC team conducted several interviews with the SCE personnel responsible for oversight of Mitsubishi it was determined that the resident provided adequate oversight of Mitsubishi's activities. Nuclear Oversight Division Project Oversight Quarterly Reports were provided by SCE that demonstrated no decrease in SCE oversight of Mitsubishi. These responsibilities were shifted to the resident at Mitsubishi. During the review of the documentation generated by the resident the NRC team noted that the resident was performing these activities on behalf of SCE.

2) Purchase Order Review

The team reviewed purchase order 6C294014 from Edison Material Supply LLC, issued September 28, 2004, for the design, fabrication, and delivery of four replacement steam generators for SONGS Units 2 and 3. The procurement order stated that all related work was to be performed in accordance with Specification SO23-617-01, "Specifications for Design and Fabrication of RSG for Units 2 and Unit 3." Specification SO23-617-01 identified the codes, standards, regulations and other documents applicable to the design, fabrication, and delivery of the replacement steam generators. For example Specification SO23-617-01 invoked American Society of Mechanical Engineers Boiler and Pressure Vessel Code, American National Standards, American Society for Testing and Materials Standards, and Electric Power Research Institute Technical Report 016743-V2R1, "Guidelines for PWR Steam Generator Tubing Specifications and Repair," among others.

3) Supplier Audit and Surveillance Reports

The team reviewed a sample of audits and surveillances performed on Mitsubishi to verify SCE's approval process of Mitsubishi and subcontracted services. The team noted that the audits and annual assessments reviewed were adequately documented and provided evidence of Mitsubishi's compliance with quality assurance requirements. The team also verified that audit reports supported the conclusions made by SCE.

5.2 Mitsubishi Quality Assurance/Quality Control

a. Inspection Scope

The team reviewed Mitsubishi implementation of their quality assurance program to determine if it complied with the requirements of 10 CFR 50, Appendix B, "Quality

Assurance Criteria for Nuclear Power Plants and Fuel Reprocessing Plants." The team also reviewed a sample of reports from audits and surveys that Mitsubishi conducted of various subcontractors, such as Sumitomo to determine the adequacy of oversight provided by Mitsubishi activities affecting quality and that contracted activities were implemented in accordance with the Mitsubishi-approved quality assurance program. In addition, the team reviewed Mitsubishi's Approved Suppliers List to verify that vendors listed were qualified according to Mitsubishi's specifications and that the list was maintained current.

b. Observations and Findings

No findings were identified.

1) Policies and Procedures for Supplier Selection and Control

The team reviewed Mitsubishi Quality Assurance Manual, Section 4, "Procurement Control," of the which defines the process used to ensure that purchased material, source material, and subcontracted services conform to the applicable requirements of the American Society of Mechanical Engineers Code and to customer procurement documents. Section 4.4 of the Quality Assurance Manual provided measures for the approval and control of suppliers and described the process that Mitsubishi used to conduct surveys or audits, as required. Additionally, Section 4.4 provided guidance for the preparation of purchase specifications and subcontract specifications, including the imposition of regulatory requirements for the American Society of Mechanical Engineers Code, Section III products.

The team reviewed Procedure BUH94-06, "Vendor Evaluation Procedure," which provided guidance on the evaluation of the quality control capability of suppliers by performing surveys, audits and performance evaluations of the supplier quality assurance program. Procedure BUH94-06 provided a detailed description of the entire process to be followed by auditors before, during and after a survey/audit was performed.

No issues were identified.

2) Supplier Audit and Surveillance Reports

The team reviewed a sample of external audits and surveys to verify Mitsubishi's approval process of Sumitomo Metal Industries, Limited, Steel Tube Works and Sumitomo Metal Industries, Limited, Pipe & Tube Company Wakayama Steel Works. The team noted that the audits and annual assessments reviewed were adequately documented and provided evidence of each company's compliance with quality assurance program requirements. The team also verified that audit checklists were prepared and completed for the audit and contained sufficient objective evidence to support the conclusions made by Mitsubishi.

During the review, the team learned that as a consequence of nonconformance report UHNR-SON-RSG-06N005 related to inadequate lot control during final mill annealing of the tubing, Mitsubishi issued a stop work order to Sumitomo. As part of

their process Mitsubishi visited Sumitomo to find the root cause of the nonconformance. After a review of Sumitomo's corrective action, Mitsubishi was able to confirm the adequacy of the corrective actions and preventive actions. Mitsubishi released Stop Work Order UHH-G06A097 imposed on Sumitomo.

On May 8, 2007, Mitsubishi performed Special Audit UHQ-07N004, on Sumitomo, in order to confirm adequacy of activities based on Sumitomo Corrective Action Plan UHCP-07N004. During the audit Mitsubishi found two findings and made one recommendation. Both findings required corrective action from Sumitomo. The Mitsubishi audit indicated that Sumitomo was not able to perform adequate activities for manufacturing heat transfer tubing in accordance with Sumitomo's shop manual. The causes of the deficiencies identified during the audit were a result of Sumitomo's staff failing to follow the shop manual requirements. Because the two findings were related to the stop work order, Mitsubishi did not allow Sumitomo to start manufacturing activities until adequate implementation of corrective actions were confirmed by Mitsubishi. On June 21, 2007, Mitsubishi verified Sumitomo implementation of the corrective actions. During this visit at Sumitomo, Mitsubishi verified the operations involving straight tube fabrication prior to tube bending operations were performed in accordance with Sumitomo's shop manual. Mitsubishi found that the same type of corrective actions taken by Sumitomo for straight tube fabrication operations applied to tube bending operations. During the review of the implementation of the corrective actions Mitsubishi could not verify acceptability of Sumitomo tube fabrication operations for the tube bending process. Mitsubishi allowed Sumitomo to restart operation only for the straight tube fabrication. On July 13, 2007, Mitsubishi subsequently confirmed the adequacy of Sumitomo corrective actions on tube bending processes. Mitsubishi verified that the bending operations followed the requirement of the Sumitomo' shop manual. On July 17, 2007, Mitsubishi lifted the restrictions imposed on Sumitomo and they were allowed to restart operations.

No issues were identified.

3) Maintenance of the Approved Supplier List

The team reviewed Mitsubishi Quality Assurance Manual Section 4, "Procurement Control," which defined the controls for the maintenance, distribution, and update of Qualified Vendor List UES-20100006. According to Section 4, the Nuclear Plant Quality Assurance Section had the responsibility for preparing, approving, and distributing the qualified vendor list and any subsequent revisions. In addition, a review by the quality assurance engineer was required prior to final document approval. Mitsubishi was informed of changes to their supplier's quality assurance manuals through procurement requirements imposed on the suppliers on their certificate of qualification as an approved vendor. If the vendor did not maintain their quality assurance program, they were removed from the qualified vendor list. Prior to issuing a Quality Assurance Manual revision, approved vendors were required to send a copy to Mitsubishi for review and approval, after which Mitsubishi updated the qualified vendor list with the latest revision number and date.

No issues were identified.

5.3 Quality Assurance Conclusion

The team concluded that the quality assurance program requirements for quality activities to support the replacement steam generator project were consistent with the requirements of 10 CFR Part 50, Appendix B. The team also concluded that SCE's and Mitsubishi's quality assurance program requirements were appropriately translated into implementing procedures to support the replacement steam generator project.

6.0 Implementation of Steam Generator Industry Information (Charter Item 6) (Mitsubishi Charter Item 3)

a. Inspection Scope

The team reviewed procurement documentation, Mitsubishi design documentation, and the 10 CFR 50.59 review package to assess SCE's and Mitsubishi's consideration and implementation (as appropriate) of operating experience as part of the steam generator replacement project, and in the steam generator tube inspections conducted during the current outages for SONGS Units 2 and 3. The team interviewed various personnel with respect to operating experience considerations relating to major design changes incorporated into the replacement steam generators. The team reviewed operating experience in NRC generic communications and worldwide plant operating experience that might potentially be relevant to conditions observed at SONGS.

b. Observations and Findings

No findings were identified.

The original steam generators installed throughout the domestic fleet of pressurized water reactors, including SONGS, experienced widespread corrosion of the tubes and tube support plates, stress corrosion cracking of the tubes, and wear at tube supports. These problems led to the replacement of nearly all of the original steam generators, in most cases well before the end of their design lifetime. For SONGS, the design of the replacement steam generators included a number of design changes to correct life limiting problems with the original steam generators, based in part on consideration of SONGS-specific and industry-wide operating experience. This included use of more corrosion resistant materials for the tubing and tube support plates to mitigate corrosion and stress corrosion cracking issues experienced in the past. The licensee's bid specification required that the stay cylinder feature of the original steam generators be eliminated to maximize the number of tubes that could be installed in the replacement steam generators and to mitigate past problems with tube wear at tube supports caused by relatively cool water and high flow velocities in the central part of the tube bundle. Mitsubishi employed a broached trefoil tube support plates instead of the egg crate supports in the original design. In addition to providing for better control of tube to support plate gaps and easier assembly, the broached tube support plates were intended to address past problems with the egg crate supports by providing less line of contact and faster flow between the tubes and support plates, reducing the potential for deposit buildup and corrosion. Mitsubishi selected a u-bend configuration for the upper part of the tube bundle instead of the square bend design of the original steam

generators based on its experience that u-bends were easier to fabricate and support and were easier to inspect.
The team's review of Mitsubishi design documentation for the anti-vibration bars indicates that Mitsubishi considered wear in the u-bend region as the most important issue affecting the anti-vibration bar design. Mitsubishi reviewed operating experience regarding wear in the u-bend region of replacement steam generators and trended the experience data as a function of steam generator manufacturer, tube packing arrangements (tube pitch, square versus triangular arrays), and steam generator size. The SONGS steam generators are relatively large, and Mitsubishi acknowledged that this and the tight tube packing geometry could affect wear experience. Mitsubishi stated that the SONGS replacement steam generator were designed to minimize these concerns by providing more support points with shorter spans in the u-bend region along with effective zero gaps between the tubes and anti-vibration bars during steam generator operation. Mitsubishi manufacturing was designed on achieving very small uniform gaps between the tubes and anti-vibration bars during assembly.

Engineering Change Package NECP 800071703 for the replacement steam generators evaluated industry operating experience as it related to the manufacture and operation of the replacement steam generators. Several of these experiences related to fabrication issues, lack of weld quality, material defects, loose parts, lack of cleanliness, and failure to fully expand tubes in the tubesheet. The licensee found most of these issues to be applicable to the replacement steam generators at SONGS, but that these kinds of issues would be adequately addressed by the supplier's (typically Mitsubishi) augmented quality assurance procedures and continuous quality oversight by the licensee. The licensee also cited augmented receipt inspections, in-process verifications, foreign material exclusion and control, and cleanliness inspections on the part of the supplier or the licensee, as applicable, as addressing these issues.

The licensee addressed industry operating experiences relating to stress corrosion cracking of steam generator tubing by noting that the Alloy 690 thermally treated tubing in the replacement steam generators were expected to be substantially more resistant to stress corrosion cracking than the tubing alloys used in earlier model steam generators. The licensee also addressed experience at another unit which experienced tie rod and consequential tube bow as a result of differential thermal expansion between the tubes and shroud and unexpected interference between some tube support plates. The stay rod (equivalent to tie rods at other unit) and shroud material for the replacement steam generators have been selected to have similar coefficients of thermal expansion which would preclude a similar problem.

Steam Generator Degradation Assessment 51-9176667-001 (prepared by AREVA) supporting steam generator inspections during the current outages for Units 2 and 3 evaluated industry operating experience relating to steam generator in-service inspections. This included operating experience reports, including NRC Information Notice 2010-05, "Management Of Steam Generator Loose Parts And Automated Eddy Current Data Analysis," relating to eddy current test probe issues and data analysis errors. In response to these issues, SCE personnel stated that specific training was given to the data analysts at SONGS on the lessons learned from these experiences and where applicable, appropriate data was included in the SONGS site specific performance demonstration. The licensee also described additional measures that

would be taken at SONGS to address these issues. The review also addressed operating experience reports dealing with unexpected tube support indications or lack thereof. In response, SCE stated that indicated anti-vibration bar locations by eddy current will be compared to the anti-vibration bar locations specified in the Mitsubishi design drawings.

Steam Generator Degradation Assessment 51-9176667-001 also addressed numerous operating experience reports involving loose parts and foreign objects in steam generators, including several instances involving resultant damage to steam generator tubing. These reports included NRC Information Notices 2004-10, "Loose Parts in Steam Generators," 2004-16, "Tube Leakage Due to a Fabrication Flaw in a Replacement Steam Generator," and 2004-17, "Loose Part Detection and Computerized Eddy Current Analysis in Steam Generators." Some of these reports dealt with eddy current probes, or pieces of probes, which were left behind as loose parts on the primary side. Most of the operating experience reports related to lose parts and foreign objects on the steam generator secondary side. In response, SCE approach for addressing this issue was through procedure changes and secondary side visual inspections which included the open tube lane, the entire peripheral annulus, and appropriate visual examination followup on eddy current indications of possible loose parts. The inspection with the exception of the loose parts component was performed, as scheduled, during the current refueling outage for SONGS Unit 2. The inspection for loose parts will be performed at the first scheduled inspection during the next refueling outage. The team noted that possible loose parts indications were not found during the 100 percent eddy current test inspection of the Unit 3 steam generators during the current outage. The team also noted that secondary side visual inspections were performed in the upper bundle area of the Unit 3 steam generators to evaluate the tube-to-retainer bar intersections and in a limited area above the 7th tube support plate.

The NRC staff issued many generic communications relating to steam generator tube integrity issues since the 1980s. The team reviewed these documents and determined that many of these related to the potential for stress corrosion cracking of the tubes which the staff found was not expected to be a concern for the thermally treated Alloy 690 material in the SONGS replacement steam generators by virtue of its greatly enhanced resistance to stress corrosion cracking. Most of the others related to problems encountered with eddy current flaw detection and sizing, the occurrence and detection of loose parts/foreign objects, and monitoring of primary to secondary leakage. The team's review indicated that lessons learned from these NRC generic communication documents had generally been incorporated into industry guideline documents relating to steam generator inspections, monitoring of primary-to-secondary leakage, and other guidelines documents prepared by the Electrical Power Research Institute. This information was incorporated into the licensee's inspection and leakage monitoring guidelines.

The team reviewed NRC generic communications not falling into one of the above categories for potential relevance to SONGS Unit 2 and 3. One of these was NRC Information Notice 2004-16 concerning an operational leakage event at another plant due to damage caused by a packing screw during transport to the steam generator manufacturer. The licensee stated in its steam generator change package that this incident was precluded for SCE by prohibiting the use of screws and nails as fasteners

for tubing shipping crates. The licensee also addressed NRC Information Notice 2007 37, "Buildup of Deposits in Steam Generator," concerning fatigue of a low row u-bend at a foreign unit as a result of deposit build up and lack of support for the low row u-bend. Engineering Change Package NECP 800071703 specified that this type of incident was precluded in the replacement steam generators by virtue of anti-vibration bar supports extending to the low row u-bends. Steam Generator Degradation Assessment 51-9176667-001 documented that this type of problem reflected an advanced stage of deposit accumulation that was not anticipated for the foreseeable future in the SONGS replacement steam generators.

7.0 Packing, Shipping, Handling, and Receipt Inspection (Charter Item 7)

a. Inspection Scope

The team interviewed licensee personnel involved with the packing, shipping, handling, and receipt inspection of the replacement steam generators. In addition, the team reviewed SCE receipt acceptance criteria to assess if critical attributes were appropriately specified and if the licensee had the ability to assess acceptability of meeting those acceptance criteria. The team reviewed evaluations associated with supplier deviation reports, nuclear notifications and changes to handling specifications. With respect to replacement steam generators the team focused on differences in SONGS shipping, handling, and receipt acceptance between the Unit 2 and 3 steam generators from the manufacturing site in Japan to final installation on site.

b. Observations and Findings

No findings were identified.

The team identified three unresolved items for which additional information is required to determine if performance deficiencies exist or if the issues constitute violations of NRC requirements.

(1) Introduction: The team identified an unresolved item associated with Unit 3 steam generators not shipped in accordance with specification SO23-617-01, "Design and Fabrication of Replacement Steam Generators for Units 2 and 3" (title does not match Documents Reviewed section – please check other titles for your sections) and requirements for handling, storage, and shipping. Specifically, ANSI N45.2-1977, "Quality Assurance Program Requirements for Nuclear Facilities," required a special protective environment for handling, storage, and shipping of the replacement steam generators. However, because of schedule changes, the Unit 3 protective environment which included maintaining a nitrogen pressure and a monitoring plan was altered significantly.

Description: The team evaluated specifications associated with the shipping and handling of the Unit 2 and 3 replacement steam generators. Based on the information evaluated by the team, the steam generators procurement and shipping specifications required monitoring and maintenance of nitrogen atmosphere inside the replacement steam generators during shipment. Supplier Deviation Request

SDR 10041870-09091 dated December 1, 2009, documents a request "not to control the positive pressure, the dew point of nitrogen, and the oxygen content on the primary and secondary side of the Unit 3 replacement steam generators to accelerate delivery schedule."

Specification SO23-617-01, "Design and Fabrication of Replacement Steam Generators for Units 2 and 3," Revision 4, Section 3.16.3, specifies the supplier shall be responsible for monitoring and maintaining nitrogen atmosphere inside the steam generators during their shipping from Mitsubishi to the California port discharge point. The team noted that Unit 3 steam generators did not require, monitoring or control of dew point, oxygen concentration, inside nitrogen pressure. The team could not identify if this was properly evaluated (Reference Section 5 of shipping and handling procedure SO23-617-1-M1350).

Additional review and follow up will be required to review the evaluations and corrective actions associated with the maintaining the Unit 3 replacement steam generators protective environment during shipping and then determine whether this issue represents a performance deficiency or constitutes a violation of NRC requirements. This issue is identified as URI 05000362/2012007-05, "Shipping Requirements not in Accordance to Industry Standards."

(2) Introduction: The team identified an unresolved item associated with the shipping and handling specifications requiring methods of tube bundle support. The team could not determine if this requirement to provide a tube bundle support method was adequately evaluated by SCE.

Description: Based on the information gathered by the team on shipping and handling specifications associated with the Unit 2 and 3 replacement steam generators, the team could not determine that Mitsubishi or SCE adequately considered the potential impact of not providing methods of tube bundle supports as required in SO23-617-01, "Design and Fabrication of Replacement Steam Generators for Units 2 and 3." In response to the team questions regarding tube bundle support methods the team was provided with results from Procedure L5-04GA069, "Sagging Measurement Procedure," Revision 7. However the team noted the procedure is considered a non-quality affecting procedure and used for reference only.

Additional review and follow up will be required to review the evaluations associated with the requirements to provide tube bundle support during shipping for the Unit 2 and 3 steam generators and then determine whether this issue represents a performance deficiency or constitutes a violation of NRC requirements. This issue is identified as URI 05000362/2012007-06, "Shipping Requirements not in Accordance to Design and Fabrication Specifications."

(3) Introduction: The team identified an unresolved item associated with evaluation of excessive shipping induced forces of Unit 3 replacement steam generator 3E-088.

Description: The team reviewed the SG shipping accelerometer data reports for both Unit 2 and Unit 3. In addition, the team also reviewed shipping and handling records and identified the following:

- Different transoceanic shipping companies and ships were used (U2: Happy Ranger, U3: Enchanter)
- During the discharge from the ship Unit 3 replacement steam generator 3E0-88 (3B) recorded simultaneous signals on the three attached accelerometers
- Unit 3 steam generator 3E0-88 was the only steam generator to record simultaneous signals on the three attached accelerometers
- Unit 3 steam generators received significantly more accelerometers hits compared to Unit 2

Unit 3 replacement steam generator 3E0-88 accelerometers indicated up to a 1.23 g spike with a simultaneous recording on all three of the attached accelerometers. Mitsubishi provided an evaluation of the forces which showed loads were within allowable stress limits but exceeded stress for an operating basis earthquake. The team was not able to determine if this was properly considered.

Additional review by the NRC is required to fully assess if the shipping forces contributed to the tube-to-tube wear in Unit 3 and then determine whether this issue represents a performance deficiency or constitutes a violation of NRC requirements. This issue is identified as URI 05000362/2012007-07, "Unit 3 Steam Generator 3E-088 Stresses Related to Handling."

8.0 Thermal-hydraulic and Flow Induced Vibration Modeling (Charter Item 8)

a. Inspection Scope

The team conducted and overall review of Mitsubishi thermal-hydraulic design documents and drawings used in the manufacture of the Units 2 and 3 steam generators. The team developed an independent ATHOS model to run simulations for various operating conditions to assess thermal-hydraulic phenomena in the steam generators and assess differences in key parameters based on changing operating conditions. The objective of the modeling was to understand the interactions of the key parameters to compare ATHOS modeling results to the degradation trends found during the eddy current inspections.
The team was not able to perform any independent tube vibration analysis because the NRC does not have the associated vibration software programs. However, since two key outputs of the thermal-hydraulic code are inputs to the vibration model, the ATHOS model results for fluid velocity and void fraction were used to predict increases or decreases in vibration forces and amplitude.

b. Observations and Findings

No findings were identified.

The team identified one unresolved item for which additional information is required to determine if a performance deficiency exists or if the issue constitutes a violation of NRC requirements.

(1) Introduction: The team identified an unresolved item associated with the adequacy of Mitsubishi's FIT-III thermal-hydraulic code. The FIT-III code predicted non-conservative low velocity and low void fraction results which were used as inputs to the vibration code FIVATS. These non-conservative thermal-hydraulic results lead Mitsubishi to conclude that margins to instability were significantly larger than they actually were.

Description: Replacement steam generators were designed and manufactured in accordance with SONGS Design Specification SO23-617-1, "Conformed Specification for Design and Fabrication of Replacement Steam Generators for Unit 2 and Unit 3," Revision 4 and ASME Section III, "Rules for Construction of Nuclear Facility Components". The replacement steam generators had enhanced materials and maintenance.

The tube bundle, comprised of 9727 u-tubes, is supported by a set of seven tube support plates which are maintained and spaced by a network of tie-rods. The ends of the u-tubes were welded onto the tube sheet lower face cladding and were full depth expanded in the tube sheet holes. The u-bends are supported by a set of 6 anti-vibration bars, having a maximum of 12 contact points, in the center of the bundle. For shorter tubes near the periphery, a fewer number of anti-vibration bars are present.

One of the major enhancements of the replacement steam generators was the use of Alloy-690 tubing versus Alloy-600 for corrosion resistance. Alloy-690 has lower heat conductivity so, to achieve same power, the heat transfer surface area must be increased by at least 10 percent. This required more tubes to be used in the replacement steam generators. The increased number of tubes resulted in a more tightly compacted tube bundle and elimination of the stay cylinder. The increase in the number of tubes could lead to increases in primary reactor coolant flow through the steam generators. Orifices were installed in the steam generator inlet nozzles to ensure maximum allowed primary system flowrates were not exceeded.

The tube layout indexing or incrementation used in these generators was smaller than other replacement steam generator designs. The tighter indexing results in smaller pitch/diameter ratio in critical regions of the tube bundle u-bends. In addition, it was noted that the anti-vibration bar support structure is not connected to the wrapper for lateral or vertical support; instead the anti-vibration bar system structure is only supported vertically by resting on the tubes.

Other operational and physical comparisons of the replacement steam generators and original steam generators were reviewed by the team and no significant differences were noted.

Additional review by the NRC is required to fully assess the adequacy of Mitsubishi's FIT-III thermal-hydraulic code and then determine whether this issue represents a performance deficiency or constitutes a violation of NRC requirements. This issue is identified as URI 05000362/2012007-08, "Non-Conservative Thermal-Hydraulic Model Results."

8.1 Thermal-hydraulic Assessments

The replacement steam generators thermal hydraulic operation and responses were based on the steam generator design geometric characteristics and operating parameters of the reactor coolant flow and temperature and the secondary feedwater flow and temperature. Calculations were performed for 0 to 100 percent power, beginning-of-life and end-of-life conditions considering limiting tube plugging and fouling. The important actual operating parameters selected for use in the model were saturation pressure, circulation ratio, steam flowrate, tube and shell side pressure drops, water and steam inventories, and global heat transfer coefficient.

Mitsubishi used the SSPC (Steady State Performance Calculation) code to compute these operational parameters, as described in Mitsubishi Document L5-04GA510, "Thermal and Hydraulic Parametric Calculations," Revision 5. The FIT-III code was used to determine thermal-hydraulic fluid flow conditions, with the results described in Mitsubishi Document L5-04GA521, "3D Thermal and Hydraulic Analysis," Revision 3. The FIVATS code was used to compute tube stability ratios that are used to predict tube vibration, with results described in Mitsubishi Document L5-04GA504 "Evaluation of Tube Vibration," Revision 3. In addition, the ABAQUS code was used compute stress and natural vibration frequency, and a code called IVHET was used for tube wear analysis. The key design code for tube bundle design and vibration analysis is thermal-hydraulic code FIT-III since it

computes the two key parameters (fluid velocity and density[1]) that are the primary contributors to the onset of fluid-elastic instability, which indicates the potential for excessive tube vibration.

The Mitsubishi acceptance criterion for vibration was to avoid fluid-elastic instability of tube spans by keeping the calculated stability ratios less than 1. Mitsubishi used the approach given in the ASME code Section III, Division 1, Appendix N-1330, "Flow-Induced Vibration of Tubes and Tube Banks," to calculate stability ratios and they also avoided natural frequencies of the tubes similar to the reactor coolant pump dynamic frequencies.

Design specific flow induced vibration analysis was performed for select U-bend tubes exposed to the greatest vibration risk, generally those with longest unsupported length under most limiting operating condition (lowest steam pressure, end of life design conditions). The phenomenon of fluid-elastic instability of tubes is characterized by cross-flow velocity (for out-of-plane mode) and normal velocity (for in-plane mode) where the local velocities exceed a critical velocity value (given via Conners' Equation[2]). The parameter of local velocity divided by critical velocity is referred to as stability ratio. The accuracy of calculating fluid-elastic instability is limited based on inputs that are best determined by design-specific mockup test data. Mitsubishi did not perform design-specific mockup tests, but used generally accepted test data, and other data based on Mitsubishi test rigs that were not specific to the SONGS replacement steam generator design.

If operating velocities reach this critical value, vibration amplitudes can increase rapidly and fluid-elastic instability forces can lead to rapid pulsation and damaging of tubes. The U-bend region is most susceptible because (1) the local fluid has a higher void fraction, with high velocities; (2) the fluid flow is in a direction normal to the tube, and (3) the anti-vibration bars are limited in their dampening capability along the plane of the tubes. Traditional design of anti-vibration bar systems have not considered in-plane fluid forces since it was accepted that the rigidity and dampening strength of the tube in this direction was adequate to preclude it. This event at SONGS is the first US operating fleet experience of in-plane fluid-elastic instability, sufficient to cause tube-to-tube contact and wear in the U-bend region.

The team noted that Design Specification SO23-617-1, "Conformed Specification for Design and Fabrication of Replacement Steam Generators for Unit 2 and Unit 3," Revision 4, did not address specific criteria for stability ratio and does not mention fluid-elastic instability. The team did find that the Mitsubishi calculated design values for stability ratios did not exceed 0.5. It is important to note, that each steam generator manufacturer has different design values for maximum stability ratios; therefore there is no standard value. The smaller that the design stability ratio is (has to be less than 1), the more margin to fluid-elastic instability.

---

[1] Void fractions and density are inversely proportional.

[2] Fluidelastic Vibration of Heat Exchanger Tube Arrays, Journal of Mechanical design – Volume 100 – April 1978, H.J. Connors, JR.

Mitsubishi computed the flow-induced vibration status of the steam generators in Document L5-04GA504, "Evaluation of Tube Vibration," Revision 3. The critical flow velocity, Uc, was obtained using the Connors' Equation based on output fluid velocities and densities from their FIT-III thermal-hydraulic model. The critical flow velocity is then calculated based on damping ratio, tube mass, tube outside diameter, averaged local cross flow gap velocity, and fluid density per selected tube. The method is based on formulations given in the ASME code Section III, Division 1, Appendix N-1330, "Fluid Elastic Instability". The ratio of normal-to-tube cross flow gap velocity to this critical velocity defines the "stability ratio".

Steam generator vendors must develop specific methods based on the thermal-hydraulic code selected and experimental data used to determine coefficients in the Conners' Equation for their particular steam generator design. The experimental data used justify the methods can be developed from in-house tests or taken from published industry data. Mitsubishi indicated that in their methodology two conservatisms were used in their bundle vibration analysis: (1) FIT-III gap velocities were averaged and multiplied by 1.5 and (2) one of 12 anti-vibration bars contacts were assumed to be inactive. The team noted that in Mitsubishi Document L5-04GA504, "Evaluation of Tube Vibration," Revision 3, the 1.5 multiplier was not an added conservatism but a requirement, needed to match test data results.

The team developed an independent model of the new steam generators using the ATHOS thermal hydraulic code[3]. The calculations were intended to assess operating cycle differences between Units 2 and 3 steam generators and review thermal hydraulic phenomena within the steam generators in order to investigate key parameters and causal factors for the excessive tube wear rates. The NRC ATHOS calculations determined that the differences in primary inlet temperature and steam flow between the units were negligible. NRC ATHOS results indicated high void fractions and high u-bend gap velocities existed in the bundle as compared to Mitsubishi FIT-III analyses used for design.

Mitsubishi provided a comparison of their ATHOS model to their FIT-III model results. The Mitsubishi ATHOS model fluid velocities were 2.5 to 3 times higher than the FIT-III model velocities with the 1.5 multiplier applied. Other independent code calculations, including an analysis by Westinghouse using their in-house modified version of ATHOS and an analysis by AREVA using their French code CAFCA4 showed similar thermal-hydraulic results (up to 4 times higher velocities than FIT-III) as those computed in the Mitsubishi ATHOS results and the NRC independent ATHOS calculations. Based on these comparisons, it was concluded that the FIT-III code and model results used for design were non-conservative even with the multiplier applied.

Most of the experimental work in fluid-elastic instability has been carried out for two-phase flow, with an air-water medium. Accepted industry data, as presented by the Mitsubishi, shows that in staggered array bundles (triangular pitch, pitch/diameter

---

[3] ATHOS3/SGAP Version 3.0-S: A Computer Program for Thermal-Hydraulic Analysis of Steam Generators, February 2005 **(need to verify this is the version that the NRC has a license for use. Did Carl re-run the ATHOS model using newest version and did it change our results?)**

=1.33), the onset of tube instability for modern steam generators, such as SONGS steam generators, can start at tube gap velocities above 6 meter/sec (pending effectiveness of the dampening structure) (please add reference for this statement). The NRC ATHOS model results indicated that there was a substantial localized region in the lower hot side of the u-bends where velocities exceeded 6 m/sec.

The NRC ATHOS calculations were compared to gap velocities computed both with the Mitsubishi ATHOS and the FIT-III models. Since tube R142C88 was the only one common for each of the analyses, it can be used as basis for comparison. The effective peak velocities were as follows:

- NRC ATHOS – 5.2 m/sec
- Mitsubishi ATHOS – 5.6 m/sec
- Mitsubishi FIT-III – 2.5 m/sec

Both the NRC and Mitsubishi ATHOS results were reasonably consistent and strongly suggested that high velocities coupled with high void fraction were primary causal factors in the tube fluid-elastic instability and the excessive wear patterns observed in the Unit 3 steam generators.

The team reviewed the verification and validation of both the Mitsubishi FIT-III thermal-hydraulic and FIVATS tube vibration models as stated in Specification SO23-617-1, Revision 4. The specification required Mitsubishi to design and build the steam generators in accordance with ASME NQA-1, "Quality Assurance Requirements for Nuclear Facility Applications," 1994, Subpart 2.7 "Computer Software" and Mitsubishi's quality assurance program.

The team reviewed Mitsubishi's verification and validation Report KAS-20050201, "FIT-III Code Validation Report," Revision 2. The report concluded the FIT-III code was valid for prediction of velocity and density behavior of two-phase flow under nominal conditions for the secondary side of PWR steam generators.

The team reviewed Mitsubishi's verification and validation Report KAS-20040253, "FIVATS Code Validation and Qualification Report," Revision 3. The FIVATS model was designed to calculate the stability ratios by using the flow velocity and density distributions from the FIT-III model. The FIVATS model primarily used the Conners' Equation, and validation was performed mainly by comparison to hand calculation; however, Mitsubishi used a mock-up test facility with a simple anti-vibration bar structure as part of their validation effort. The report concluded that adequate validation and qualification was performed to show compliance to software requirements and that the code could predict flow-induced vibration.

The team requested additional information as part of the verification and validation of the FIT-III thermal-hydraulic model. Mitsubishi provided several additional reports. One of the reports showed benchmarking comparisons to a French test facility program called CLOTAIRE in 1986. Another report conducted in 2002, showed comparisons between FIT-III and ATHOS, and concluded that both codes had good correlation with the CLOTAIRE experimental data. Because of the limited

information provided, the team could not determine the validity of the benchmarking of FIT-III.

Overall, the team determined that the validation and verification of the FIT-III code did not present overwhelming evidence that this code has been adequately benchmarked. The team did not find any problems with the validation of the FIVATS code.

## 8.2 NRC ATHOS Results

Figures 1 through 4 (different view angles of same results) show results, with low $T_{hot}$ and low steam pressure and present a 3D isometric encapsulation of steam qualities (red scale) at and above 0.9 (i.e., void fraction > 0.99) and field velocities at and above 6.0 m/sec (white scale).

The ATHOS model results of high steam quality and steam velocity closely align with the area of concern (tube-to-tube wear) in the Unit 3 replacement steam generators. In Figure 5, the code predicted regions of high void fraction and high steam velocities (vertically located z-axis cut at about 20 inches above the 7$^{th}$ TSP) are superimposed with tube-to-tube wear indications from Unit 3 steam generator 3E0-88.

The tube-to-tube wear indications align with anti-vibration bar wear indication trends; however, the anti-vibration bar wear patterns appear to indicate a more square-like, essentially rectangular behavior that suggests that there may also be a mechanical, fabrication, assembly, and/or material contribution to the tube-to-tube wear degradation.

**Figure 1**

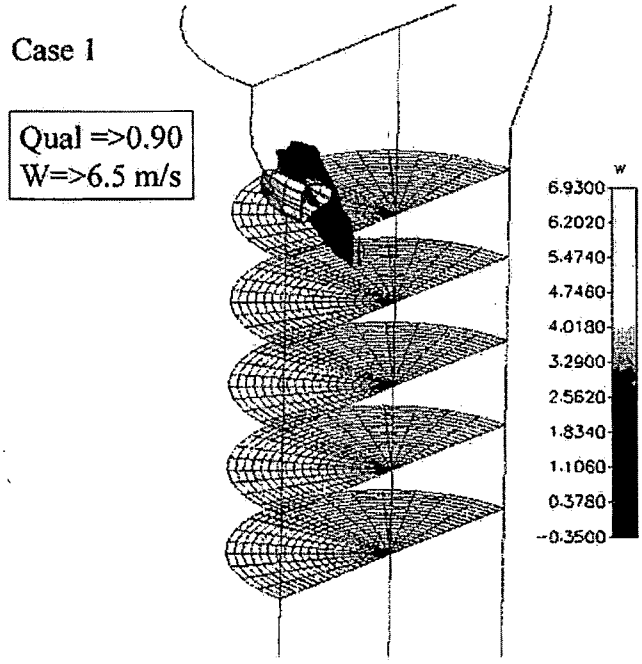


**Figure 2**

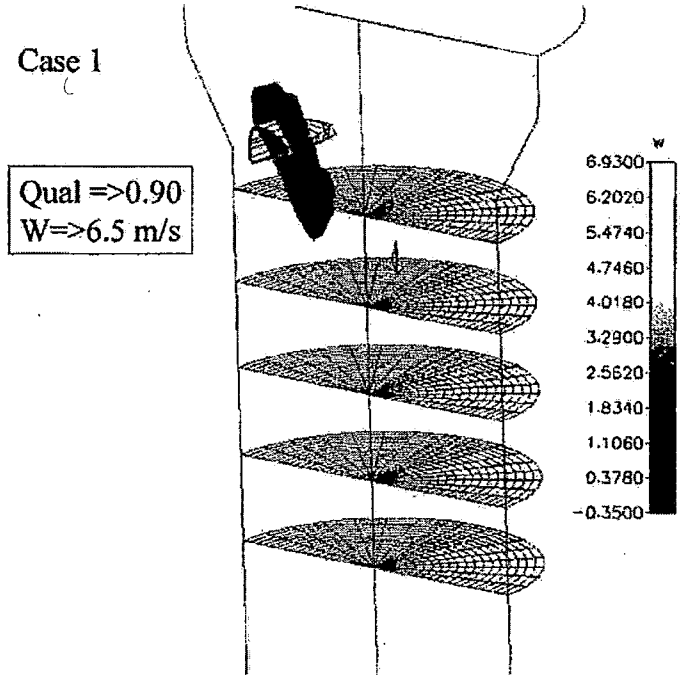

**Figure 3**

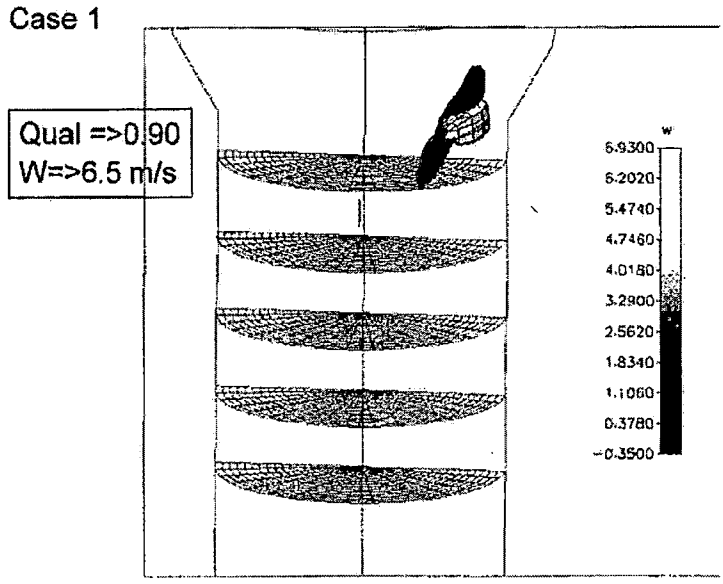


**Figure 4**

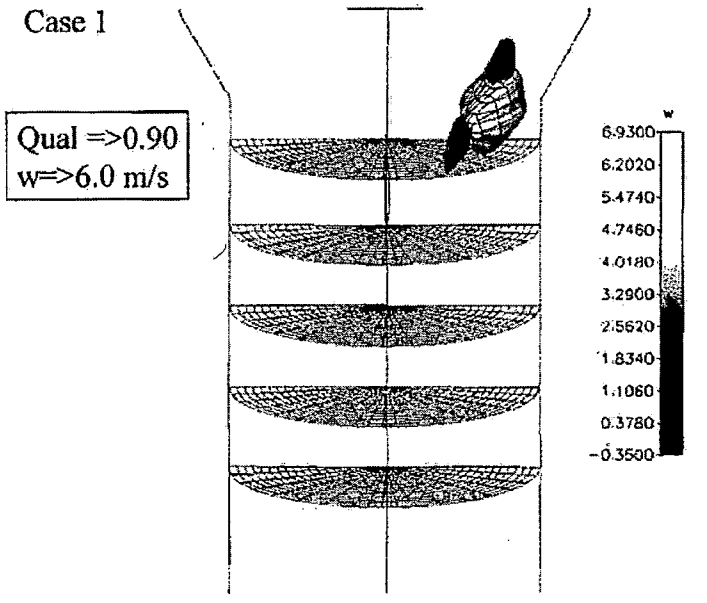

**Figure 5**

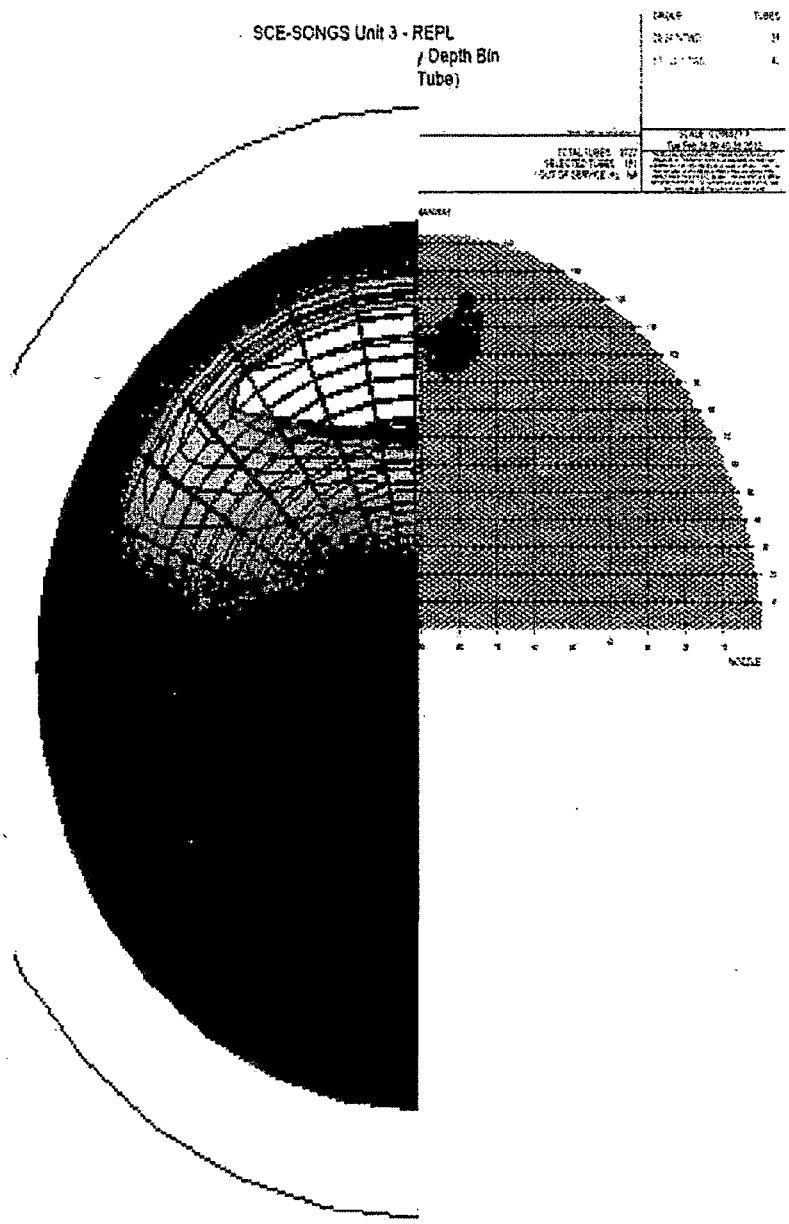


The NRC analysis indicated a correlation with the tube-to-tube wear based on a combination of high void fraction and high steam velocities. It should be noted that

the traditional forcing function, fluid velocity squared times density, does not show good agreement with the tube-to-tube wear patterns. This indicated that the high quality steam fluid velocities and high void fraction may be sufficiently high to cause conditions in the generators conducive for onset of fluid-elastic instability.

The above analyses apply equally to Units 2 and 3, so it does not explain why the accelerated fluid-elastic instability wear damage was significantly greater in Unit 3 steam generators. The ATHOS thermal-hydraulic model predicts bulk fluid behavior based on first principals and empirical correlations and as a result it is not able to evaluate mechanical, fabrication, or structural material differences or other phenomena that may be unique to each steam generator. Therefore this analysis cannot account for these mechanical factors and differences which could very likely also be contributing to the tube degradation.

## 8.3 Conclusion

Based on independent NRC thermal-hydraulic analysis, the team concluded that the SONGS replacement steam generators were not designed with adequate margin to preclude the onset of fluid-elastic instability. Therefore unless changes are made to the operation or configuration of the steam generators, high fluid velocities and high void fractions in localized regions in the u-bend will continue to cause excessive tube wear and accelerated wear that could result in tube leakage and/or tube rupture. The deficiencies appear to be related to Mitsubishi's FIT-III thermal hydraulic code having predicted non-conservative low velocity results and low void fractions. These results lead Mitsubishi to conclude that margins to instability were significantly larger than they actually are. This assessment is based on eddy current data, NRC ATHOS analysis, Mitsubishi ATHOS analysis, and other thermal-hydraulic analyses completed by Westinghouse and AREVA that all identified significantly higher fluid velocities and void fractions than FIT-III.

Based on the cause evaluation and corrective action plan, SCE determined that the best solution to prevent tube-to-tube wear was to conservatively plug and stabilize the affected areas. By taking the impacted tubes out-of-service, SCE determined that this should reduce the potential for localized fluid velocities reaching critical velocity. In addition, in order to ensure sufficient margin to preclude the onset of fluid-elastic instability, SCE determined that reactor power would also have to be reduced. At this time SCE is still developing additional corrective actions to prevent tube-to-tube wear. The actions have not been finalized and no determination has been made concerning the appropriate power level. The NRC has not made any conclusions on the proposed corrective actions. Once the corrective actions have been finalized, they will be reviewed and evaluated as part of the Confirmatory Action Letter followup inspection.

9.0 Risk Assessment (Charter Item 9)

a. Inspection Scope

The team reviewed the steam generator tube leak and failures of multiple steam generator tubes during in-situ pressure testing to support an assessment of the risk of the degraded steam generator tubes during various accident conditions, including a main steam line break accident.

b. Observations and Findings

No findings were identified.

An NRC senior reactor analyst is currently working with SCE risk assessment personnel to determine the risk associated with the loss of tube integrity for multiple tubes.

10.0 Assess Quality Assurance, Radiological Controls, and Safety Culture Components (Charter Item 10)

a. Inspection Scope

The team reviewed the event, operator actions, management decisions, steam generator eddy current examinations, in-situ pressure testing, and tube plugging and stabilization activities to determine whether issues related to quality assurance, radiological controls, or safety culture existed.

b. Observations and Findings

No findings were identified.

Region IV radiation protection inspectors reviewed the estimated offsite radiation exposure from the actual steam generator tube leak on Unit 3 steam generator 3E0-88 that occurred on January 31, 2012, including the potential dose consequence to site workers and members of the public. The licensee determined that the Unit 3 steam generator tube leak resulted in a release of gaseous effluents into the public domain, and the primary radionuclides released were argon-41, xenon-133, and xenon-135. The release resulted in an estimated 0.0000452 (4.52 E-5) mrem dose to the public. Inspectors also reviewed design drawings and radiation monitor data, performed plants tours, and confirmed the licensee's use of the offsite dose calculation methodology. The inspectors concluded that the Unit 3 steam generator tube leak was detected by the condenser steam jet air ejector radiation monitor 3RT-7820 as per design. In addition, the radiation monitor 3RT-7820 alarmed and alerted SONGS operators of the steam generator tube leak as required.

11.0 Operational impacts from Unit 3 to Unit 2 (Charter Item 11)

a. Inspection Scope

As follow-on of the previous sections, the team reviewed collections of the Mitsubishi documents and presentations, licensee documents and presentations, and NRC independent analysis and assessments to consider the operational impact on Unit 2 based on analysis and data, including eddy current results, regarding the as-found condition of Unit 3. The team compared key observations and overall differences in operational parameters that are common to both units that could affect and possibly limit Unit 2 operation. The team focused on differences in fabrication, manufacturing, operation, and eddy current data results between Units 2 and 3 steam generators.

b. Observations and Findings

No findings were identified.

Based on the review of current Cycle 16 operating data and independent NRC analysis it does not appear that there were any major difference in the thermal hydraulic phenomena at normal full power operation. Since generator physical dimensions and design are identical, the operational parameters are basically the same between the Unit 2 and 3 steam generators; therefore, the hydraulic forcing function that caused tube-to-tube wear and accelerated anti-vibration bar and tube support plate wear should also be same. The initial inspections of the Unit 2 steam generators did not indicate significant wear except at the retainer bars (different mechanism caused this wear). However, subsequent follow up inspections in Unit 2 with a more sensitive probe confirmed the existence of minor tube-to-tube wear in two neighboring tubes but in one of the steam generators. The tube-to-tube wear that was found in Unit 2 was in a similar location as that found in both of the Unit 3 steam generators.

The phenomenon of fluid-elastic instability is a function primarily of two criteria: the fluid velocity forces and the damping capability of the support structure (i.e., the tube support plates, the tubesheet, and the anti-vibration bars). Therefore, if it is determined that the thermal hydraulic forces in the bundle are the same, it can be concluded that the damping forces between the Unit 2 and Unit 3 replacement steam generators must be different. Mitsubishi performed several studies that indicated that gap contact forces in the anti-vibration bars were greater in Unit 2 than in Unit 3. However, with the exception of manufacturing data that shows slight differences, there is not currently a method available to measure the clearances between the anti-vibration bars and the tubes; however, SCE is currently working with AREVA to develop a method to take these measurements.

The tube damage found in Unit 3 is markedly more severe than Unit 2, especially considering that Unit 3 operated only about half the amount of time as Unit 2. This suggests that there is indeed a sizeable difference in the damping capability of the unit steam generators.

There are generally two options to arrest localized damaging thermal hydraulic phenomena in steam generators. The first and preferred option is to plug tubes in the

affected area. The collective plugging tends to relocate and reduce high fluid velocities and void fractions, and has on previous occasions in industry been successful. However, if plugging selected tubes does not provide significant margins adequate to arrest the damage mechanism, thermal hydraulic conditions can be reduced through a reduction in power. Reducing power has several beneficial effects including (1) tends to increase steam pressure, (2) reduces high steam fluid velocities and high void fraction in the bundle, and (3) improves damping. Currently, SCE is still reviewing and developing additional corrective actions to preclude fluid-elastic instability. The NRC has been observing some of the mockup testing being used to qualify additional repair activities.

12.0 Mitsubishi Divider Plate Manufacturing and Weld Issues (Mitsubishi Charter Item 2)

a. Inspection Scope

On March 18, 2009, Mitsubishi identified cracking indications in the weld between the divider plate and the channel head of Unit 3 replacement steam generator 3E0-88 (see figure below), after completion of the ASME Section III hydrostatic test on the secondary side. The extent of condition investigation also identified similar cracking indications in Unit 3 replacement steam generator 3E0-89. As discussed in Section 4 of this report, the cause of the cracking was attributed to the air carbon-arc gouging process used to remove the clad weld from the channel head. The team reviewed information associated with the repair of the cracking indications to assess whether the repair activities resulted in relevant differences in design and fabrication that could be considered as contributing factors for the cause of the tube-to-tube wear issue in Unit 3.

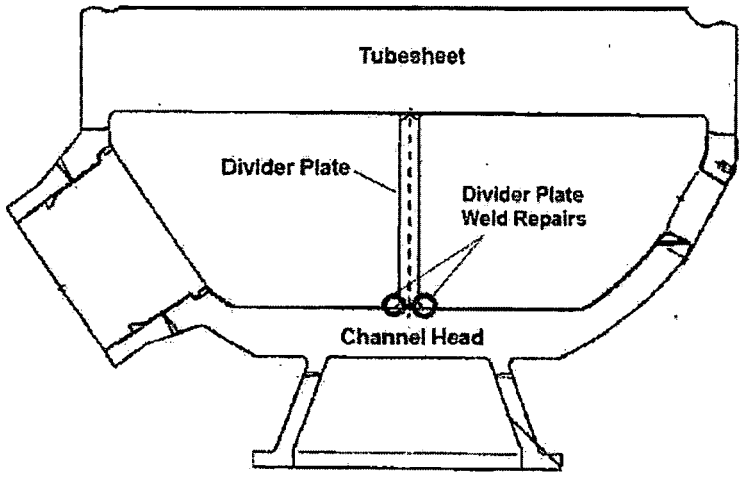


Location of Divider Plate Weld Repairs in Unit 3 Steam Generators (For Illustration Purposes Only)

b. Observations and Findings

No findings were identified.

The team identified an unresolved item for which additional information is required to determine if a performance deficiency exists or if the issue constitutes violation of NRC requirements. The team also identified several observations related to the divider plate weld repairs in Unit 3 replacement steam generators.

1) Introduction: The team identified an Unresolved Item associated with the adequacy of evaluation and controls for the divider plate weld repairs.

Description: The cracking of the divider plate weld in both Unit 3 replacement steam generators required extensive repairs affecting the channel head, divider plate, and tubesheet. Based on interviews with licensee personnel and the review of documentation for the repairs, the team determined that Mitsubishi did not perform a comprehensive evaluation to assess the impact of the divider plate repairs on the integrity of the tube bundle. The team determined that the areas listed below were not considered or evaluated in sufficient depth to identify the potential adverse effects of the planned weld repairs.

- Additional Rotations – The repair activities for the Unit 3 steam generators required additional rotations of the steam generator assembly while these were oriented in the horizontal position. The repairs resulted in approximately 300 additional rotations in each steam generator, which could have affected the configuration of the tube bundle in terms of anti-vibration bar gaps or distortion. The team identified that Mitsubishi did not fully evaluate the impact of additional rotations on the configuration of the steam generators since rotation was considered a normal evolution in the fabrication process.

- Heat Input – The repair process included extensive heat-adding activities such as grinding, flame cutting, and post-weld heat treatment. While these activities were performed in accordance with the construction code of record and an approved repair plan, they could have resulted in thermal expansion and unintended distortion of steam generator components. For example, the channel heads were removed using flame cutting and Mitsubishi's evaluation for the impact of this activity was limited to the base material area in the vicinity of the cut, i.e. the heat affected zone. Mitsubishi did not fully assess the impact this activity could have on the overall configuration of the steam generator in terms of thermal expansion of the tubesheet or distortion.

- Dimensional Checks after Repair – The team identified that Mitsubishi did not perform dimensional verifications (e.g. clearances) of the tube bundle or other secondary side dimensions after the repairs of the Unit 3 steam generators to confirm that critical dimensions were not affected by the repairs.

Additional review by the NRC is required following completion of the licensee's cause evaluation to fully assess how the repair activities affected the Unit 3 replacement steam generators and then determine whether this issue represents a performance

deficiency or constitutes a violation of NRC requirements. This issue is identified as URI 05000362/2012007-09, "Evaluation of the Effects of Divider Plate Weld Repairs in Unit 3 Replacement Steam Generators."

2) Repair Plan: The team noted that Mitsubishi developed a specific plan to conduct the repair of the divider plate weld in both Unit 3 replacement steam generators. The repair plan adequately described the major repair steps and the required implementing procedures. For some of the repair stages, the licensee developed new procedures to prescribe activities outside the normal fabrication sequence. The repair plan consisted of the following major steps:

   - Cutting off the divider plate from the tubesheet by grinding
   - Cutting off the channel head from the tubesheet by flame cutting
   - Cutting the divider plate from the channel head by grinding
   - Removal of the heat affected zone of the channel head bowl edge due to flame cutting
   - Application of weld buildup and post-weld heat treatment on the channel head bowl edge
   - Application of low alloy steel buildup and Alloy 690 butter on the bottom of the channel head for divider plate welding, including required post-weld heat treatment
   - Application of Alloy 690 buildup on the divider plate, including required post-weld heat treatment
   - Welding divider plate to channel head
   - Welding the divider plate to the tubesheet
   - Welding the channel head to the tubesheet
   - Primary side hydrostatic test

3) Differences between Replacement Steam Generators: The team identified the notable differences listed below between Unit 2 and Unit 3 replacement steam generators as a result of the divider plate weld repair activities.

   - Material Class for the Tubesheets – The tubesheet material for both Unit 3 replacement steam generators was reclassified to facilitate the additional post-weld heat treatment required for the repair of the divider plate welds. The tubesheet manufacturer originally certified that the tubesheet material met the requirements of ASME specification SA-508/Grade 3/Class 2, with a post-weld heat treatment time of approximately 15 hours. The repair activities in Unit 3 required additional post-weld heat treatment, which was expected to affect the properties of the tubesheet material to the extent that the mechanical properties would not meet the requirements for SA-508/Grade 3/Class 2 material. Mitsubishi performed mechanical testing on a specimen fabricated from the archive samples that was exposed to 30 hours of post-weld heat treatment and the tests showed that the tubesheet material's tensile strength did not meet the ASME specifications for SA-508/Grade 3/Class 2 material. Mitsubishi performed a reconciliation review to reclassify the material to SA-508/Grade 3/Class 1,

which has a lower tensile strength. The reconciliation included an evaluation of resulting stresses on the tubesheet under design, upset, emergency, faulted, and test conditions using the material properties for SA-508/Class 1 material. The evaluation resulted in acceptable stresses based on the stress limits imposed by the construction code of record. This issue was evaluated by Mitsubishi in the non-conformance report process and Supplier Deviation Request SDR-086 10041870-09086 was submitted to the licensee for review and approval. The licensee approved the reclassification of the tubesheet material.

- Minimum Thickness of the Channel Head Base Metal – The channel heads of both Unit 3 steam generators were removed by flame cutting to facilitate the divider plate weld repairs. The removal and final welding of the channel head resulted in a reduction of the minimum wall thickness of the channel head base metal. The minimum base metal thickness was reduced by 1.18-inches. Mitsubishi evaluated this change in the "Design Report for the Channel Head Region." The reduction in minimum wall thickness was addressed through a reconciliation of stress ratios based on the stress limits imposed by the construction code of record. The analysis demonstrated the structural adequacy of the channel head, primary inlet nozzle, primary outlet nozzle, primary manway, support skirt, and the stud bolts of the primary manway.

- Number of Bolts in the Divider Plate Patch Plates – The original design of the replacement steam generators included a patch plate held in place at the upper corners of the divider plate by three bolts. As a result of the divider plate-to-tubesheet weld removal to support the repair activities, the Unit 3 divider plate patch plates were modified to be held by two bolts instead of the three bolts specified in the original design. Mitsubishi submitted this design change to the licensee for review and approval. Licensee personnel approved the design change as requested.

- Weld Buildup on Channel Head Surfaces – Since the repair of the divider plate welds in Unit 3 steam generators required cutting of the channel head, weld buildup had to be applied on the affected surfaces in order to restore the dimensions to design specifications. Mitsubishi submitted this design change to the licensee for review and approval. Licensee personnel approved the design change as requested.

- Post Weld Heat Treatment – The tubesheet-to-channel head weld area experienced a total of two post-weld heat treatments. Both Unit 3 replacement steam generators received an additional local post-weld heat treatment at approximately 1103° F for approximately 3.5 hrs. Mitsubishi submitted this fabrication process change to the licensee for review and approval. Licensee personnel approved the design change as requested.

- Total of Rotations during Fabrication – The total number of rotations on each steam generator varied as a result of the hydrostatic test results and the repairs on the divider plate welds.

| Steam Generator | Initial Rotations | Additional Rotations for Divider Plate Repairs | Total Rotations |
|---|---|---|---|
| Unit 2 E0-89 | 520 | 0 | 520 |
| Unit 2 E0-88 | 510 | 0 | 510 |
| Unit 3 E0-89 | 470 | 340 | 810 |
| Unit 3 E0-88 | 440 | 320 | 760 |

13.0 Office of Nuclear Reactor Regulation (NRR) Review of SONGS 50.59 Evaluation

a. Inspection Scope

The NRR technical specialist reviewed all of the design changes associated with the replacement steam generators to determine whether the changes to the facility or procedures, as described in the updated final safety analysis report, had been reviewed and documented in accordance with 10 CFR 50.59 requirements. The technical specialist reviewed the various information used by SCE to review the changes being made to the replacement steam generators, including calculations, analyses, design change documentation, procedures, the updated final safety analysis report, the technical specifications, and plant drawings. The evaluation process used by the technical specialist included determining if the design changes to the replacement steam generators were a change to the facility or procedures as described in the updated final safety analysis report or a test or experiment not described in the updated final safety analysis report. The technical specialist also verified that safety issues related to the changes were resolved. The technical specialist compared the safety evaluations and supporting documents to the guidance and methods provided in NEI 96-07, "Guidelines for 10 CFR 50.59 Implementation," Revision 1, as endorsed by NRC Regulatory Guide 1.187, "Guidance for Implementation of 10 CFR 50.59, Changes, Tests, and Experiments," to determine the adequacy of the 10 CFR 50.59 evaluations.

b. Observations and Findings

No findings were identified

The NRR technical specialist identified one unresolved item for which additional information is required to determine if performance deficiencies exist or if the issues constitute violations of NRC requirements.

(1) Introduction: The NRR technical specialist reviewed SCE's 10 CFR 50.59 evaluation contained in Engineering Change Packages 800071702 and 800071703 for the Unit 2 and Unit 3 replacement steam generators, respectively, in which SCE determined that the impact of the replacement steam generators on the current licensing basis and any need for NRC approval as required by 10 CFR 50.59.

(2) Description: The NRR technical specialist reviewed the SCE's 10 CFR 50.59 evaluation against 10 CFR 50.59(c)(2)(viii) which requires that licensees obtain a license amendment pursuant to 10 CFR 50.90 prior to implementing a proposed change if the change would result in a departure from a method of evaluation described in the final safety analysis report (as updated) used in establishing the design bases or in the safety analyses. Industry guidance NEI 96-07, Revision 1, Section 3.10, "Methods of Evaluation," states, "Definition: Methods of evaluation means the calculational framework used for evaluating behavior or response of the facility or structures, systems, and components." Regulation 10 CFR 50.59 a(2), states, "*Departure from a method of evaluation described in the FSAR (as updated) used in establishing the design bases or in the safety analyses* means (i) changing any of the elements of the method described in the FSAR (as updated) unless the results of the analysis are conservative or essentially the same; or (ii) changing from a method described in the FSAR to another method unless that method has been approved by NRC for the intended application." Regulation 10 CFR 50.59(d)(1) requires that the licensee maintain records of changes in the facility that "includes a written evaluation which provides the bases for the determination that the change, test, or experiment does not require a license amendment...." The technical specialist evaluated SCE's bases for determining that the changes would not result in the departure from the method of evaluation used in establishing the design bases or in the safety analyses. Specifically, the technical specialist evaluated whether the changes involved:

(a) changing of any of the elements of the method described in the updated final safety analysis report, which consistent with 10 CFR 50.59 a(2)(i) would be justified by demonstrating that the results of the analysis are conservative or essentially the same; or

(b) changing from a method described in the updated final safety analysis report to another method, which consistent with 10 CFR 50.59 a(2)(ii) would be justified by demonstrating that method has been approved by NRC for the intended application.

The NRR technical specialist reviewed SCE's 10 CFR 50.59 evaluation and found two instances that failed to adequately address whether the change involved a departure of the method of evaluation described in the updated final safety analysis report.

(a) Use of ABAQUS instead of ANSYS: Updated Final Safety Analysis Report Sections 3.9.1.2.2.1.11 and 3.9.1.2.2.2.3 were revised to reflect that the SONGS Unit 2 and 3 original steam generators stress analyses for reactor coolant system structural integrity utilized the ANSYS computer program, whereas the replacement steam generators analyses utilized the ABAQUS computer program. The SCE's 50.59 evaluation incorrectly determined that using the ABAQUS instead of ANSYS was a change to an element of the method described in the updated final safety analysis report did not constitute changing from a method described in the updated final safety analysis report to another method, and as such, did not mention whether ABAQUS has been approved by

the NRC for this application.

(b) Use of ANSYS instead of STRUDL and ANSYS: Updated Final Safety Analysis Report Section 5.4.2.3.1.3 was revised to reflect that the SONGS Unit 2 and 3 evaluation of tube stress under loss of coolant accident conditions for the original steam generators consisted of a two-step process utilizing the STRUDL and ANSYS computer programs to calculate displacement histories and tube stresses, respectively, while the corresponding replacement steam generators analysis determined tube stresses from blowdown forces using only the ANSYS computer program. While SCE's 50.59 evaluation correctly considered this a change from a method described in the FSAR to another method, the 50.59 evaluation did not mention whether the method has been approved by NRC for this application.

Additional review and followup will be required to review the departure of the method of evaluation used during the stress analysis calculations associated with the replacement steam generators and then determine whether this issue represents a performance deficiency or constitutes a violation of NRC requirements. This issue is identified as URI 05000362/2012007-10, "Evaluation of Departure of Method of Evaluation for 10 CFR 50.59 Processes."

## 14.0 Exit Meeting Summary

On June 18, 2012, the NRC held a public meeting and presented the inspection results to Mr. P. Dietrich, Senior Vice President and Chief Nuclear Officer, and other members of the staff, who acknowledged the findings. Proprietary information was provided to the team and all proprietary information was returned to SCE.

**SUPPLEMENTAL INFORMATION**
**KEY POINTS OF CONTACT**

Licensee Personnel

P. Dietrich, Senior Vice President and Chief Nuclear Officer
R. Litzinger, President, SCE
D. Bauder, Vice President and Station Manager
T. Palmisano, Vice President of Engineering, Projects and Site Support
T. McCool, Plant Manager
T. Yackle, Assistant Plant Manager
D. Yarbrough, Director of Operations
R. Corbett, Director of Performance Improvement
O. Flores, Director of Nuclear Oversight
R. St Onge, Director of Nuclear Regulatory Affairs
B. Winn, Director of Nuclear Financial Management
E. Avella, Director of Project Management
M. Coveney, Director of Nuclear Leadership
M. Stevens, Title needed, Nuclear Regulatory Affairs
C. Cates, Nuclear Safety Culture and Site Recovery Manager
M. Malzahn, Project Management Engineer
C. Harberts, Steam Generator Replacement Project Manager
M. Mihalik, Senior Engineer, Project Management Organization
R. McWey, Nuclear Oversight Manager
M. Pawlaczyk, Nuclear Regulatory Affairs Technical Specialist
J. Peattie, Maintenance Manager
R. Treadway, Nuclear Regulatory Affairs Manager
B. Olech, Consulting Engineer, Edison
D. Brabec, Project Manager Steam Generator Recovery Program
D. Calhoun, Senior Engineer, Design Engineering Organization, Edison

Mitsubishi Personnel

H. Kaguchi, Mitsubishi Heavy Industries, Director, Component Designing Department
I. Otake, Mitsubishi Heavy Industries, Deputy Chief Engineer, Quality Assurance Department
T. Tsuruta, Mitsubishi Heavy Industries, Engineer, Quality Assurance Department
T. Inoue, Mitsubishi Heavy Industries, Deputy Director, Plant Designing Department
H. Hirano, Mitsubishi Heavy Industries, Project Manager, Overseas Project, Component Designing Department
R. Bywater, Mitsubishi Nuclear Energy Systems, COLA Licensing Manager
F. Gillespie,
R. Godley,

Other Contractor Personnel

R. Walker, MPR Consultant
M. Short, Consultant

Bruce ?, Areva, TITLE NEEDED
??, ATHOS Engineer, NAME AND TITLE NEEDED

Comn
contra

NRC Personnel
T. Blount, Deputy Division Director, Division of Reactor Safety
R. Lantz, Branch Chief, Projects Branch D
G. Warnick, Senior Resident Inspector

## LIST OF ITEMS OPENED, CLOSED AND DISCUSSED

Opened

| | | |
|---|---|---|
| 05000362/2012007-01 | URI | Adequacy of the Trip/Transient and Event Review Procedure (Section 1) |
| 05000362/2012007-02 | URI | Evaluation of Unit 3 Vibration and Loose Parts Monitoring System Alarms (Section 3) |
| 05000362/2012007-03 | URI | Evaluation of Retainer Bars Vibration during the Original Design of the Replacement Steam Generators (Section 4 |
| 05000362/2012007-04 | URI | Evaluation of Changes in Dimensional Controls during the Fabrication of Unit 2 and Unit 3 Replacement Steam Generators (Section 4) |
| 05000362/2012007-05 | URI | Shipping Requirements not in Accordance with Industry Standards (Section 7) |
| 05000362/2012007-06 | URI | Shipping Requirements not in Accordance with Design and Fabrication Specifications (Section 7) |
| 05000362/2012007-07 | URI | Unit 3 Steam Generator E088 Stresses Related to Handling (Section 7) |
| 05000362/2012007-08 | URI | Non-Conservative Thermal-Hydraulic Model Results (Section 8) |
| 05000362/2012007-09 | URI | Evaluation of the Effects of Divider Plate Weld Repairs in Unit 3 Replacement Steam Generators (Section 12) |
| 05000362/2012007-10 | URI | Evaluation of Departure of Method of Evaluation for 10 CFR 50.59 Processes (Section 13) |

Closed

None

Discussed

None

## LIST OF DOCUMENTS REVIEWED

AUDITS/SELF-ASSESSMENTS/QUALITY CONTROL DRAWINGS

SONGS DOCUMENTS

| Number | Title | Revision/Date |
|---|---|---|
| MHI-1-06 | Southern California Audit of Mitsubishi Heavy Industries | June 16, 2006 |
| MHI-1-09 | Southern California Audit of Mitsubishi Heavy Industries | April 27, 2009 |
| MHI-2-04 | Southern California Audit of Mitsubishi Heavy Industries | December 14, 2004 |
| SCES-007-10 | Procurement and Material Control Program Audit | September 14, 2010 |
| MHI-01-04 | Evaluation and Review of Contractor, Consultant, Utility or Licensee Audit Report | September 24, 2004 |
| | Status of Southern California Edison (SCE) Corrective Action Request (CAR) Nos. S-1918 and S-1932 Closure | March 23, 2007 |
| | Southern California Edison (SCE) Corrective Action Request (CAR) No. S-1991, Supplier Stop Work Order (SSWO) No. SSWO-001-08 | 1 |
| SO123-XV-50 | Corrective Action Program | 25 |
| | RSG-SCE/MHI-06-2233 – Southern California Edison (SCE) Corrective Action Request (CAR) No. S-1882 Closure | May 3, 2006 |
| | RSG-SCE/MHI-06-1916 - Southern California Edison (SCE) Corrective Action Request, (CAR) No. S-1906 Closure | February 22, 2006 |
| | Southern California Edison (SCE) Audit No. MHI-1-06 and Corrective Action Request (CAR) Nos. S-1915, S-1916, S-1917, and S-1918 | January 31, 2008 |
| AR# 040901345 | Qualification Letter | September 24, 2004 |

| Number | Title | Revision/Date |
|---|---|---|
| AR#0503014 58 | Qualification Letter | March 23, 2005 |
| AR#0605001 34 | Qualification Letter | May 10, 2006 |
| 6C294014 | Edison Material Supply Procurement Order for Mitsubishi Heavy Industries | September 28, 2004 |
| SO23-617-01 | Specifications for design and fabrication of RSG for Unit 2 and Unit 3 | 4 |
| SO23-617-02 | Specifications for Baseline Pre-Service Examination on Tubing for RSG | 1 |
| SO23-617-03 | Replacement Steam Generator Installation Unit 2 and 3 | 4 |
| SO23-617-04 | Specifications for the Transportation of Replacement Steam Generators | 1 |
| TL C001783 | San Onofre Topical Report Quality Assurance Manual | 64 |
| TL C001782 | San Onofre 2&3 FSAR Updated Quality Assurance Program Topical Report SCE-1 | 15 |
| | SONGS Unit 2 & 3 Replacement Steam Generator QA/QC Manufacturing Oversight Plan Japan Steel Works | 0 |
| | SONGS Unit 2 & 3 Replacement Steam Generator QA/QC Oversight Plan | 1 |
| | SONGS Unit 2 & 3 Replacement Steam Generator Receipt Inspection Plan | 0 |
| SGR-A10183 | Replacement Steam Generator Resident Oversight Plan | 1 |
| SGR-A10159 | San Onofre Nuclear Generating Station Unit 2 & 3 Steam Generator Replacement Project Plan | 1 |
| MHI-1SV-05 | Source Verification Report of MHI/Japan Steel Work | March 15, 2005 |
| MHI-1SV-06 | Source Verification Report of MHI/Japan Steel Work | February 7, 2006 |
| MHI-1SV-07 | Source Verification Report of MHI | March 20, 2007 |
| MHI-1SV-08 | Source Verification Report of MHI/Japan Steel Work | August 29, 2008 |
| MHI-2SV-05 | Source Verification Report of MHI | April 1, 2005 |

| Number | Title | Revision/Date |
|---|---|---|
| MHI-2SV-06 | Source Verification Report of MHI/Japan Steel Work | March 24, 2006 |
| MHI-2SV-07 | Source Verification Report of MHI | November 2, 2007 |
| MHI-3SV-05 | Source Verification Report of MHI/Japan Steel Work | May 3, 2005 |
| MHI-3SV-06 | Source Verification Report of MHI | May 3, 2006 |
| MHI-4SV-05 | Source Verification Report of MHI/Japan Steel Work | May 4, 2005 |
| MHI-4SV-06 | Source Verification Report of MHI/Japan Steel Work | May 23, 2006 |
| MHI-5SV-05 | Source Verification Report of MHI/Japan Steel Work | June 10, 2005 |
| MHI-5SV-06 | Source Verification Report of MHI | September 26, 2006 |
| MHI-6SV-05 | Source Verification Report of MHI | July 1, 2005 |
| MHI-6SV-06 | Source Verification Report of MHI | January 24, 2007 |
| MHI-7SV-05 | Source Verification Report of MHI/Japan Steel Work | August 12, 2005 |
| MHI-7SV-06 | Source Verification Report of MHI | January 16, 2007 |
| MHI-8SV-05 | Source Verification Report of MHI | March 26, 2007 |
| MHI-8SV-06 | Source Verification Report of MHI | Date? |
| MHI-9SV-05 | Source Verification Report of MHI/Japan Steel Work | October 13, 2005 |
| MHI-10SV-05 | Source Evaluation Report of MHI | February 8, 2006 |
| MHI-11SV-05 | Source Verification Report of MHI/Japan Steel Work | December 21, 2005 |
| SO123-XII-18.19 | Nuclear Oversight Procedure Supplier Audits | 10 |
| SO123-XII-7.12 | Nuclear Oversight Procedure Source Verification | 5 |

CALCULATIONS

| Number | Title | Revision |
|---|---|---|
| SO23-617-1-C275 | Design Report of the Channel Head Region | 6 |
| SO23-617-1-C514 | Design for RCS Flow Rate | 1 |
| SO23-617-1-M1562 | Retainer Bar Tube Wear Report | 0 |

CORRECTIVE ACTION REPORTS

Comm
were r
numb

| | | | | |
|---|---|---|---|---|
| | | | | |

DESIGN BASIS DOCUMENTS

| Number | Title | Revision |
|---|---|---|
| SO23-617-01 | Specification for Design and Fabrication of RSGs for Unit 2 and Unit 3 | 4 |
| SO23-617-1-M1492 | As-Built Reconciliation Report for Unit 3 | 2 |
| L5-04GA428 | Design of Anti-Vibration Bar | 5 |
| DBD-SO23-365 | Design Basis for Steam Generator and Secondary Side | 10 |

DESIGN CHANGE NOTIFICATIONS/SUPPLIER DEVIATION REQUESTS

| Number | Title | Revision |
|---|---|---|
| NECP 800071703 | Engineering Change Package, "Replacement Steam Generators" | 0 |
| SDR-007 43366-05007 | Circulation Ratio for RSG | 0 |
| SDR-037 43366-06037 | Tube-to-Tube Clearance in 2A RSG | 0 |
| SDR-047 43366-07047 | Tool Mark in 3A Tubesheet | 0 |
| SDR-050 43366-07050 | Tool Mark in 3B Tubesheet | 0 |

| Number | Title | Revision |
|---|---|---|
| SDR-051 43366-07051 | Unit 2A Lower Shell Assembly | 0 |
| SDR-053 43366-07053 | Unit 2B Lower Shell Assembly | 0 |
| SDR-059 43366-08059 | Unit 3B Lower Shell Assembly | 0 |
| SDR-064 43366-08064 | Axial Length of AVB | 0 |
| SDR-079 43366-08079 | Statistical Size of Tube-to-AVB Gap | 0 |
| SDR-082 43366-09082 | Divider Plate Repair of Unit 3 RSGs | 0 |
| SDR-086 10041870-09086 | Specifications for Unit 3 RSG Tube Material | 0 |
| SDR-098 10041870-10098 | Overall Height of 3A RSG | 0 |
| SDR-099 10041870-10099 | Perpendicularity and Parallelism of 3A RSG Key Bracket | 0 |
| SDR-100 10041870-10100 | Parallelism of 3B RSG Key Bracket | 0 |

DRAWINGS

| Number | Title | Revision |
|---|---|---|
| SO23-617-1-D103 | Design Drawing – Component and Outline Drawing 1 / 3 | 5 |
| SO23-617-1-D104 | Design Drawing – Component and Outline Drawing 1 / 3 | 2 |
| SO23-617-1-D106 | Design Drawing Tubesheet and Extension Ring 1 of 3 | 12 |
| SO23-617-1-D107 | Design Drawing Tubesheet and Extension Ring 2 of 3 | 5 |
| SO23-617-1-D108 | Design Drawing Tubesheet and Extension Ring 3 of 3 | 8 |
| SO23-617-1-D109 | Design Drawing Lower Shell, Middle Shell, Transition Cone and Upper Shell Stub 1 of 4 | 5 |
| SO23-617-1-D110 | Design Drawing Lower Shell, Middle Shell, Transition Cone and Upper Shell Stub 2 of 4 | 7 |
| SO23-617-1-D111 | Design Drawing Lower Shell, Middle Shell, Transition Cone and Upper Shell Stub 3 of 4 | 4 |

| Number | Title | Revision |
|---|---|---|
| SO23-617-1-D112 | Design Drawing Lower Shell, Middle Shell, Transition Cone and Upper Shell Stub 4 of 4 | 4 |
| SO23-617-1-D113 | Design Drawing Channel Head 1 of 4 | 9 |
| SO23-617-1-D113 | Design Drawing Channel Head 1 of 4 | 15 |
| SO23-617-1-D114 | Design Drawing Channel Head 2 of 4 | 13 |
| SO23-617-1-D115 | Design Drawing Channel Head 3 of 4 | 5 |
| SO23-617-1-D116 | Design Drawing Tube Bundle 1 of 3 | 1 |
| SO23-617-1-D117 | Design Drawing Tube Bundle 2 of 3 | 1 |
| SO23-617-1-D118 | Design Drawing Tube Bundle 3 of 3 | 3 |
| SO23-617-1-D159 | Design Drawing Upper Shell, Upper Head Ring and Upper Head Top 1 of 4 | 7 |
| SO23-617-1-D160 | Design Drawing Upper Shell, Upper Head Ring and Upper Head Top 2 of 4 | 2 |
| SO23-617-1-D161 | Design Drawing Upper Shell, Upper Head Ring and Upper Head Top 3 of 4 | 4 |
| SO23-617-1-D162 | Design Drawing Upper Shell, Upper Head Ring and Upper Head Top 4 of 4 | 2 |
| SO23-617-1-D210 | Design Drawing of Moisture Separator Assembly 1 of 6 | 10 |
| SO23-617-1-D211 | Design Drawing of Moisture Separator Assembly 2 of 6 | 10 |
| SO23-617-1-D212 | Design Drawing of Moisture Separator Assembly 3 of 6 | 5 |
| SO23-617-1-D274 | Design Drawing Channel Head 4 of 4 | 4 |
| SO23-617-1-D294 | Design Drawing Tube Support Plate Assembly 1 of 3 | 3 |
| SO23-617-1-D295 | Design Drawing Tube Support Plate Assembly 2 of 3 | 4 |
| SO23-617-1-D296 | Design Drawing Tube Support Plate Assembly 3 of 3 | 5 |
| SO23-617-1-D383 | Design Drawing – Critical Field Interface Dimensions and Major Tolerances 1 / 3 | 7 |
| SO23-617-1-D391 | Design Drawing Wrapper Assembly 1 of 5 | 5 |
| SO23-617-1-D392 | Design Drawing Wrapper Assembly 2 of 5 | 0 |
| SO23-617-1-D393 | Design Drawing Wrapper Assembly 3 of 5 | 2 |
| SO23-617-1-D394 | Design Drawing Wrapper Assembly 4 of 5 | 2 |

| Number | Title | Revision |
|---|---|---|
| SO23-617-1-D395 | Design Drawing Wrapper Assembly 5 of 5 | 3 |
| SO23-617-1-D494 | Design Drawing – Divider Plate1 / 2 | 10 |
| SO23-617-1-D495 | Design Drawing – Divider Plate 2 / 2 | 6 |
| SO23-617-1-D507 | Design Drawing Anti-Vibration Bar Assembly 1 of 9 | 4 |
| SO23-617-1-D508 | Design Drawing Anti-Vibration Bar Assembly 2 of 9 | 2 |
| SO23-617-1-D509 | Design Drawing Anti-Vibration Bar Assembly 3 of 9 | 0 |
| SO23-617-1-D539 | Design Drawing Anti-Vibration Bar Assembly 4 of 9 | 0 |
| SO23-617-1-D540 | Design Drawing Anti-Vibration Bar Assembly 5 of 9 | 2 |
| SO23-617-1-D541 | Design Drawing Anti-Vibration Bar Assembly 6 of 9 | 2 |
| SO23-617-1-D542 | Design Drawing Anti-Vibration Bar Assembly 7 of 9 | 8 |
| SO23-617-1-D543 | Design Drawing Anti-Vibration Bar Assembly 8 of 9 | 3 |
| SO23-617-1-D544 | Design Drawing Anti-Vibration Bar Assembly 9 of 9 | 1 |
| SO23-617-1-D680 | Design Drawing – Tubing Expansion and Seal Welding | 3 |
| SO23-617-1-D1099 | Fabrication Drawing – General Shipping Arrangement [SON 2E89; SON 2E882E0-88] | 2 |
| SO23-617-1-D1100 | Fabrication Drawing – General Shipping Arrangement [SON 3E89; SON 3E88] | 2 |
| SO23-617-1-D1488 | Fabrication Drawing – Temporary Attachment For Channel Head and Tubesheet Welding (Unit 3) | 0 |
| L5-04FW111 | Detail of AVB 1 of 5 (Center Narrow AVB) | 6 |
| L5-04FW112 | Detail of AVB 2 of 5 (Center Wide AVB) | 2 |
| L5-04FW113 | Detail of AVB 3 of 5 (Side Narrow AVB) | 2 |
| L5-04FW114 | Detail of AVB 4 of 5 (Side Wide AVB for Hot Side) | 2 |
| L5-04FW115 | Detail of AVB 5 of 5 (Side Wide AVB for Cold Side) | 2 |

ENGINEERING REPORTS (ER)

| Number | Title | Revision |
|---|---|---|
| SO23-617-1-M1401 | Divider Plate Weld Joint Separation Root Cause Evaluation Report | 4 |

| | | |
|---|---|---|
| SO23-617-1-C157 | Evaluation of Tube Vibration | 3 |
| SO23-617-1-C749 | Analytical Report of AVB Assembly | 4 |
| SO23-617-1-M1265 | Summary Design Report | 8 |
| SO23-617-1-M1231 | Performance Analysis Report | 3 |
| SO23-617-1-C682 | Analytical Report of Separator and Dryer Assemblies | 7 |
| SO23-617-01R3 | Design Report of Tube | 5 |

MHI DOCUMENTS

| Number | Title | Revision/Date |
|---|---|---|
| UHQ-08N013 | MHI Survey Report of Sumitomo Metal Industries, Limited. Steel Tube Works | 0 |
| UHQ-11N010 | MHI Survey Report of Sumitomo Metal Industries, Limited. Steel Tube Works | 0 |
| UHQ-05N015 | MHI Survey Report of Sumitomo Metal Industries, Limited. Pipe & Tube Works | 1 |
| UHQ-08N014 | MHI Survey Report of Sumitomo Metal Industries, Limited. Steel Tube Works | 0 |
| UHQ-11S005 | MHI Survey Report of Sumitomo Metal Industries, Limited. Steel Tube Works | 0 |
| UHQ-05N019 | MHI Survey Report of Sumitomo Metal Industries, Limited. Steel Tube Works | 0 |
| BUH94-06 | Quality Assurance Survey/Audit Procedure of Vendors | 6 |
| BUH94-06 | Vendor Evaluation Procedure | 9 |
| BUH94-06 | Vendor Evaluation Procedure | 13 |
| 5ZDD94-06 | Vendor Evaluation Procedure | 1 |
| UHW-68-06A002 | MHI Evaluation on Corrective Action Established by Sumitomo Metal Industries Limited | 0 |
| UHNR-SON-RSG-06N005 | Nonconformance Report for Alloy 690 SG Tubing for SONGS Unit 2 | |

| Number | Title | Revision/Date |
|---|---|---|
| UHQ-08N013 | MHI Survey Report of Sumitomo Metal Industries, Limited. Steel Tube Works | 0 |
| UHQ-07N004 | MHI Audit Report of Sumitomo Metal Industries, Limited. Steel Tube Woks | 1 |
| UHCP-70N004 | Corrective Action Plan Followup Report | 0 |
| UES-20100006 | Qualified Vendor List | 18 |
| L5-04GB004 | Submittal Document Control List | 53 |
| UGNR-SON2-RSG-020 | Nonconformance Report Channel head for Unit 2A | February 2, 2006 |
| UGNR-SON2-RSG-038 | Nonconformance Report Unacceptable local diameter change of tube holes | June 2, 2006 |
| UGNR-SON2-RSG-052 | Nonconformance Report Unacceptable length of 10 tube hole pitch of tube support plate #3 | September 11, 2006 |
| UGNR-SON2-RSG-062 | Nonconformance Report Incorrect end caps of AVB 2ASN154C and AVB 2ASN164C | December 1, 2006 |
| UGNR-SON2-RSG-075 | Nonconformance Report Unacceptable gaps between tubes and AVBs | March 24, 2007 |
| UGNR-SON2-RSG-091 | Nonconformance Report Incorrect machining for steam flow limiting device | September 4, 2007 |
| UGNR-SON2-RSG-096 | Nonconformance Report Unacceptable dimensions for steam flow limiting device of Unit 2A | October 23, 2007 |
| UGNR-SON3-RSG-009 | Nonconformance Report Unacceptable local diameter change of tube holes | May 10, 2007 |
| UGNR-SON3-RSG-024 | Nonconformance Report Some gaps between tubes and AVBs are larger than the criterion | November 30, 2007 |
| UGNR-SON3-RSG-049 | Nonconformance Report Out of tolerance on hand holes inside diameter | March 2, 2009 |
| UGNR-SON3-RSG-055 | Nonconformance Report Divider plate metal repair butter/weld crack after post bake | September 11, 2009 |

| Number | Title | Revision/Date |
|---|---|---|
| UHQ-08N013 | MHI Survey Report of Sumitomo Metal Industries, Limited. Steel Tube Works | 0 |
| UGNR-SON-RSG-06N002 | Nonconformance Report Feedwater nozzle for unit 2 ID: 21721-101 | February 2, 2006 |
| B91U-N0001 | Mitsubishi Heavy Industries Ltd Kobe Shipyard & Machinery Works Quality Assurance Manual (Nuclear) | 39 |
| UES-69-040038 | Mitsubishi Heavy Industries Ltd Kobe Shipyard & Machinery Works Quality Assurance Program Manual (Project Addenda) | 15 |
| UHH-G06A97 | Stop Work Order for FMA (Final Mill Annealing) on Manufacturing of Heat Transfer Tubing for SONGS RSG | 0 |

MISCELLANEOUS DOCUMENTS

| | | |
|---|---|---|
| AR 060500134 | Action Request: Qualification Letter | |
| AR 040901345 | Action Request: Qualification Letter | |
| AR 050301458 | Action Request: Qualification Letter | |
| | Setpoint Transmittal Unit 2 and 3 Gas Monitors | December 6, 2010 |
| | SONGS Unit 3 Chemistry/Operations Logs – SG Event Timeline | January 31, 2012 |
| | Radiation Monitor 3RT-7870 Setpoints | May 31, 2011 |
| | Radiation Monitor 3RT-7818A Setpoints | May 31, 2011 |
| 2G-030-3 | Condenser Air Ejector Continuous Gas Post-Release Report | January 31, 2012 |
| SO23-617-01 | Specification for Design and Fabrication of RSGs for Unit 2 and Unit 3 | 4 |
| SO23-617-02 | Specification for Baseline Pre-Service Examination (PSE) on Tubing for Replacement Steam Generators | 1 |
| | Updated Final Safety Analysis Report for San Onofre Units 2 and 3 | April 2009 |
| SO23-617-1-M29 | Design Review Item List | 9 |

| | | |
|---|---|---|
| DA 2002-92 | Dominion Audit of Mitsubishi Heavy Industries | June 9, 2002 |
| V03-008 | Omaha Public Power District Audit of Mitsubishi Heavy Industries | July 18, 2003 |
| 99901030/2008-201 | Mitsubishi Heavy Industries (MHI), Kobe, Japan, inspection of selected portions of MHI's Quality Assurance (QA) program, and 10 CFR Part 21 program | July 18, 2008 |
| 99901384/2009-201 | Sumitomo Metal Industries, Limited, Higashi-Mukojima Amagasaki, Japan, inspection of selected portions of Sumitomo's quality assurance (QA) program and 10 CFR Part 21 program | November 13, 2009 |
| SMI-AQA-9041 | Reply to Notice of Nonconformance(99901 384/2009-201-01) | 0 |

MODIFICATIONS

| Number | Title | Date |
|---|---|---|
| Engineering Change Package NECP 800071702 | 50.59 Screening and Evaluation for Replacement Steam Generators – Unit 2 | July 31, 2009 |
| Engineering Change Package NECP 800071703 | 50.59 Screening and Evaluation for Replacement Steam Generators – Unit 3 | July 31, 2009 |

NUCLEAR NOTIFICATIONS

| | | | | |
|---|---|---|---|---|
| 201907899 | | | | |

*NN's issued as a result of inspection activities.

PROCEDURES

| Number | Title | Revision |
|---|---|---|
| SO123-ODCM | Offsite Dose Calculation Manual | 0 |

| Number | Title | Revision |
|---|---|---|
| SO123-0-47 | Notification and Reporting of Significant Events | 18 |
| SO123-III-5.9 | Manual Effluent Gaseous Release Permits, Setpoint Calculations, and Monitor Calibration Constant Evaluations | 8 |
| SO123-VIII-1 | EPIP: Recognition and Classification of Emergencies | 36 |
| SD-SO23-310 | System Description - Turbine Building Sampling System | 9 |
| SD-SO23-690 | System Description – Steam Generator E088/089 | 18 |
| SD-SO23-690 | System Description – Steam Generator Radiation Monitors RE-6753 & RE-6759 | 18 |
| SD-SO23-690 | System Description – Condenser Air Ejector Wide Range Radiation Monitors RE-7870A/B & Low Range Radiation Monitors RE-7818 | 18 |
| SB-SO-FB-006 | Divider Plate Weld Joint Repair Procedure | 10 |
| SB-SO-HT-1001 | Post Weld Heat Treatment Procedure | 22 |
| SO123-XXXII-2.27 | Supplier Deviation Requests (SDRs) | 5 |
| SO23-617-1-D104 | Design Drawing - Component and Outline Drawing 2/3 | 2 |
| SO23-617-1-D1099 | General Shipment Arrangement SON-2A | 4 |
| SO23-617-1-M1246 | Hydrostatic Test Procedure | 3 |
| SO23-617-1-M139 | Post Weld Heat Treatment Procedure | 21 |
| SO23-617-1-M1395 | Divider Plate Weld Joint Procedure | 9 |
| SO23-617-1-M1398 | Divider Plate Weld Joint Repair Plan | 12 |
| SO23-617-1-M1461 | Additional Post Weld Heat Treatment Procedure for Divider Plate Weld Joint Repair | 0 |

| Number | Title | Revision |
|---|---|---|
| SO23-617-1-M616 | Tubesheet Drilling Procedure | 9 |
| SO23-617-1-M733 | Helium Leak Test Procedure of the Tube to Tubesheet Welds (High Pressure) | 5 |
| SO23-617-1-M735 | Helium Leak Test Procedure of the Tube to Tubesheet Welds (Low Pressure) | 3 |
| SO23-617-1-M819 | AVB Structure Assembly Procedure | 8 |
| SO23-617-1-M820 | Tubing and AVB Installation Procedure | 6 |
| SO23-617-1-M821 | Anti-Vibration Bar Inspection Procedure (After Assembly) | 5 |
| UGS-L5-050043 | Anti-Vibration Bar Inspection Procedure (Individual Bar) | 1 |
| UGS-L5-050045 | Inspection Procedure for Tube and Anti-Vibration Bar Inspection | 10 |

VENDOR DOCUMENTS

| Number | Title | Revision/Date |
|---|---|---|
| 51-9176667-001 | Engineering Information Record, "SONGS 2C17 & 3C17 Steam Generator Degradation Assessment" | 1 |
| UGNR-SON2-RSG-012 | DI for Tube Support Plate Material | 1 |
| UGNR-SON2-RSG-014 | Discrepancy for tube thickness of TSP between Drawing and Purchase Specification | 0 |
| UGNR-SON2-RSG-015 | Unacceptable Indications by MT for wrapper support of Unit 2 #A | 1 |
| UGNR-SON2-RSG-021 | Unacceptable Indications by MT for Anti rotation support of Unit 2 #A | 0 |
| UGNR-SON2-RSG-027 | Unacceptable MT indication for Anti-Rotation Supports | 0 |

| Number | Title | Revision/Date |
|---|---|---|
| UGNR-SON2-RSG-054 | Unacceptable length of 10 tube hole pitch of tube support Plate # 6 | 1 |
| UGNR-SON2-RSG-058 | Insufficient clearance between the tubes in Row No. 28 and 30 in Column No. 22 | 3 |
| UGNR-SON2-RSG-059 | Insufficient clearance between the tubes in Row No 92 and 94 in Column No. 34 | 0 |
| UGNR-SON2-RSG-067 | Unacceptable Gaps between Tubes and AVBs | 7 |
| UGNR-SON2-RSG-075 | Unacceptable gaps between Tubes and AVBs | 1 |
| UGNR-SON2-RSG-091 | Incorrect Machining for Steam Flow Limiting Device | 0 |
| UGNR-SON2-RSG-103 | Damaged Locking Plates of Vane Jacking Device | 9 |
| UGNR-SON2-RSG-109 | As built dimension of #2A RSG | 1 |
| UGNR-SON2-RSG-112 | As built dimension of #2B RSG | 0 |
| UGNR-SON3-RSG-001 | Tubesheet | 0 |
| UGNR-SON3-RSG-018 | Unacceptable local diameter change of Tube holes | 2 |
| UGNR-SON3-RSG-024 | Some Gaps between Tubes and AVBs are larger than the criterion | 1 |
| UGNR-SON3-RSG-030 | Some gaps between tubes and AVBs are larger than the criterion | 0 |
| UGNR-SON3-RSG-051 | Divider Plate Weld Crack | 16 |
| UGNR-SON3-RSG-052 | Divider Plate Weld Crack | 19 |
| UGNR-SON3-RSG-057 | Extension of Tubesheet PWHT Duration | 1 |

| Number | Title | Revision/Date |
|---|---|---|
| UGNR-SON3-RSG-059 | Out of Tolerance dimensions on Primary Inlet/Outlet Nozzles and Support Skirt | 1 |
| UGNR-SON3-RSG-062 | Out of tolerance dimensions on Primary Inlet/Outlet Nozzles and Support Skirt (#B RSG) | 1 |
| UGNR-SON3-RSG-067 | UT indications in the Alloy 600/690 butter of Divider Plate Weld Groove | 0 |
| UGNR-SON3-RSG-074 | As built dimensions of #3A RSG (Overall Height) | 0 |
| UGNR-SON3-RSG-075 | As built dimension of #3A RSG | 1 |
| UGNR-SON3-RSG-076 | As built dimension of #3B RSG | 0 |
| UHNR-SON3-RSG-07N001 | Divider Plates for Unit 3 | 0 |
| Heat Treatment Record 40010SG-B-900D-R1-68 | Heat Treatment Chart for SG3 | April 4, 2012 |
| SO23-617-1-M149 | Purchase Specification for Heat Transfer Tubing | 4 |
| Fabrication Process Sheet 3901-SG-A-400E (Order 2563901/G101) | Rework of AVB Insertion for SONGS Unit 2 Replacement Steam Generator #A – Lower Portion | 1 |
| Fabrication Process Sheet 3901-SG-A-400D (Order 2563901/2300) | Helium Leak Test for SONGS Unit 2 Replacement Steam Generator #A – Lower Portion | 0 |
| TSN-5050 | Control Document Status list For Alloy 690 SG Tubing | 2 |
| TSN-5051 | Program of Preproduction Qualification (PPQ) For Alloy 690 SG Tubing | 3 |
| TSN-5053 | Melting Procedure for Alloy 690 SG Tubing | 0 |

| Number | Title | Revision/Date |
|---|---|---|
| TSN-5054 | Identification and Traceability Procedure for Alloy 690 SG Tubing | 2 |
| TSN-5055 | Prohibited and Detrimental Material Control Procedure for Alloy 690 SG Tubing | 0 |
| TSN-5072 | Sampling Test Specimen Procedure for Alloy 690 SG Tubing | 2 |
| TSN-5073 | Chemical Analysis Procedure for Alloy 690 SG Tubing | 1 |
| TSN-5074 | Inclusion Test Procedure for Alloy 690 SG Tubing | June 4, 2005 |
| 005F-No.4316 | PPQ Test Results of Alloy 690 SG Tubing for San Onofre Nuclear Generating station Unit 2&3 | 2 |
| 4009-3ir01 | Moody International Ltd Inspection Report of Sumitomo Metal Industries | September 28, 2005 |

## SEQUENCE OF EVENTS

### San Onofre Nuclear Generating Station, Unit 2 and 3 Steam Generators

| Date | Event Description |
|---|---|
| November 2001 | Licensee forms a team to study the viability of replacing the steam generators |
| May 7, 2002 | Vendor benchmarking commences |
| July 2002 | Bechtel replacement study complete |
| November 7, 2003 | Replacement steam generator specification complete |
| December 12, 2003 | Replacement steam generator specification sent to procurement office |
| December 21, 2003 | Replacement steam generator request for proposal issued |
| February 17, 2004 | Bechtel installation study report completed |
| February 27, 2004 | Steam generator replacement request filed with California Public Utility Commission |
| February 27, 2004 | Replacement steam generator bids received by SCE |
| July 28, 2004 | Replacement steam generator vendor selected |
| August 2, 2004 | Replacement steam generator bid evaluation review board start |
| September 13, 2004 | Replacement steam generator bid evaluation completed |
| September 16, 2004 | SCE Board of Directors approval for Mitsubishi to design and manufacture steam generators |
| September 30, 2004 | Replacement steam generator contract signed |
| September 30, 2004 | Fabrication of Unit 2 and Unit 3 steam generators commences at Mitsubishi |
| November 2004 | SCE performs first full quality assurance audit of Mitsubishi |
| March 2, 2005 | Replacement steam generator installation specification sent to procurement office |
| March 17, 2005 | Mitsubishi/SCE anti-vibration bar design discussion |
| March 2005 | SCE performs follow-up surveillance audit of Mitsubishi |
| March 23, 2005 | SCE places conditional qualification on Mitsubishi |

| | |
|---|---|
| September 21, 2005 | Final environmental impact report released to public |
| October 2005 | SCE performs follow-up quality assurance audit of Mitsubishi |
| December 15, 2005 | California Public Utility Commission approval received |
| December 15, 2005 | Installation contract signed with Bechtel |
| February 2006 | SCE performs follow-up quality assurance audit of Mitsubishi |
| March 10, 2006 | Edison International Company Board of Directors approval of steam generator replacement project |
| April 22, 2006 | SONGS Unit 2 refueling outage completed |
| May 1, 2006 | Replacement steam generator transportation specification issued |
| May 10, 2006 | SCE removes conditional qualification from Mitsubishi |
| September 27, 2006 | Sumitomo Metal Industries issues a non-conformance report on some tubing for non-conformance to specifications associated with the final mill annealing process |
| September 27, 2006 | Mitsubishi issues stop work order to Sumitomo |
| September 28, 2006 | Mitsubishi issues corrective action request to Sumitomo based on the final mill annealing non-conformance report |
| September 29, 2006 | Mitsubishi visits Sumitomo to conduct root cause investigation |
| October 3, 2006 | Mitsubishi visits Sumitomo to confirm the adequacy of the corrective actions taken to address the root cause findings from the September 29, 2006 meeting |
| October 3, 2006 | Mitsubishi releases stop work order after confirming adequacy of Sumitomo's corrective actions |
| November 10, 2006 | Non-conformance report associated with final mill annealing process is closed |
| March 12, 2007 | Corrective action request associated with the final mill annealing non-conformance report closed |
| May 8, 2007 | Mitsubishi performs followup audit at Sumitomo and issues corrective action request for two findings in the audit |
| July 17, 2007 | Sumitomo submits corrective actions taken for the findings of the May 8, 2007 audit; Mitsubishi closes corrective action request. |
| September 13, 2006 | Mitsubishi/SCE technical meeting regarding anti-vibration bars |

| | |
|---|---|
| April 2008 | Fabrication of Unit 2 steam generators complete |
| April – June 2008 | Mitsubishi performs primary and secondary side hydrostatic pressure tests of Unit 2 steam generators |
| July 4, 2008 | AREVA performs baseline pre-service eddy current examinations on steam generator 2E0-89 at Mitsubishi facilities in Kobe, Japan |
| July 18, 2008 | AREVA performs baseline pre-service eddy current examinations on steam generator 2E0-88 at Mitsubishi facilities in Kobe, Japan |
| September and October 2008 | Final inspection for Unit 2 steam generators is completed. Primary and secondary sides filled with nitrogen. |
| December 16, 2008 | Unit 2 steam generators shipped from Kobe, Japan |
| February 14, 2009 | Unit 2 steam generators arrive at SONGS |
| Early March 2009 | Fabrication of Unit 3 steam generators complete |
| Middle March 2009 | Primary and secondary hydrostatic pressure tests conducted on Unit 3 steam generators |
| March 18, 2009 | Unit 3 divider plate weld failure discovered |
| March – July 2009 | Root cause evaluation of the divider plate-to-tubesheet weld conducted by Mitsubishi |
| March – June 2009 | Repair procedures developed for Unit 3 steam generators |
| June 2009 | Repair work on Unit 3 steam generators commences |
| July 2009 | AREVA performs final pre-service eddy current examinations on Unit 2 steam generators at SONGS |
| September 2009 – April 2010 | Unit 2 performs a refueling outage and installs the replacement steam generators |
| March 29, 2010 | Repair work to Unit 3 steam generator 3E0-89 complete |
| April 5, 2010 | Repair work to Unit 3 steam generator 3E0-88 complete |
| April 2010 | Unit 2 recommences power operations |
| April 18, 2010 | Unit 3 steam generator 3E0-89 passes primary side hydrostatic pressure retest |
| April 24, 2010 | Unit 3 steam generator 3E0-88 passes primary side hydrostatic pressure retest |

| | |
|---|---|
| June 2010 | AREVA performs baseline pre-service eddy current examinations on Unit 3 steam generators at Mitsubishi facilities in Kobe, Japan |
| August 2, 2010 | Unit 3 steam generators shipped |
| October 4, 2010 | Unit 3 steam generators arrive at SONGS |
| October 2010 – February 2011 | Unit 3 performs a refueling outage and installs the replacement steam generators |
| February 2011 | Unit 3 recommences power operations |
| January 10, 2012 | Unit 2 refueling outage start |
| January 31, 2012 | Unit 3 tube leak; rapid shutdown commences |
| February 2, 2012 | Unit 3 reaches cold shutdown conditions |
| February 12, 2012 | Unit 3 eddy current inspections commence on both steam generators |
| March 13, 2012 | In-situ pressure testing commences on tubes in steam generator 3E0-88 of Unit 3 |
| March 14, 2012 | In-situ pressure test failures on tubes located in Row 106 Column 78, Row 102 Column 78, and Row 104 Column 78 of steam generator 3E0-88 |
| March 15, 2012 | In-situ pressure test failures on tubes located in Row 100 Column 80, Row 107 Column 77, Row 101 Column 81, and Row 98 Column 80 of steam generator 3E0-88 |
| March 16, 2012 | In-situ pressure test failure on tube located in Row 99 Column 81 of steam generator 3E0-88 |
| March 16 – 21, 2012 | The 65 remaining tubes in steam generator 3E0-88 pass in-situ pressure testing |
| March 15 – 21, 2012 | The 56 identified tubes in steam generator 3E0-89 of Unit 3 are in-situ pressure tested and all tubes passed. |
| March 19 – 29, 2012 | NRC Augmented Inspection Team performs inspections at SONGS |
| March 23, 2012 | NRC received a letter from SCE outlining their commitments for corrective actions prior to restart of both Unit 2 and Unit 3 |
| March 27, 2012 | NRC issues a Confirmatory Action Letter to SCE |
| June 18, 2012 | NRC conducts public Augmented Inspection Team exit meeting near SONGS |

UNITED STATES
NUCLEAR REGULATORY COMMISSION
REGION IV
1600 EAST LAMAR BLVD
ARLINGTON, TEXAS 76011-4511

~~July 18, 2012~~

Mr. Peter Dietrich
Senior Vice President and
Chief Nuclear Officer
Southern California Edison Company
San Onofre Nuclear Generating Station
P.O. Box 128
San Clemente, CA 92674-0128

SUBJECT: SAN ONOFRE NUCLEAR GENERATING STATION – NRC AUGMENTED INSPECTION TEAM REPORT ~~05000361/2012007 and~~ 05000362/2012007

Dear Mr. Dietrich:

The U. S. Nuclear Regulatory Commission (NRC) completed an inspection at your San Onofre Nuclear Generating Station (SONGS). The enclosed report documents the inspection results, which were discussed with you and other members of your staff during a public exit meeting on June 18, 2012.

~~The Augmented Inspection Team (AIT) was established to review the causes, safety implications, and your staff's actions following an event that occurred on January 31, 2012, involving a reactor coolant leak identified in a Unit 3 steam generator and a subsequent identification that multiple steam generator tubes in Unit 3 had experience substantial and unusual wear, eight of which failed pressure testing. The SONGS Unit 3 steam generators were new and had been in operation for less than one operating cycle. At the time of the event, SONGS Unit 2 was shutdown in a refueling outage with steam generators that had been in service for one operating cycle.~~

Unit 3 had been operating for approximately one year following replacement of the steam generators when on January 31, 2012, control room operators received alarms, that indicated reactor coolant was leaking into steam generator 3E0-88. The leak was unexpected, and the control room operators responded in accordance with their procedures to perform a rapid shutdown, since the leak, although small, had increased enough in a short period of time to warrant the precautionary shutdown. The estimated leak rate was 75 gallons per day. The facility license allows full power operation with a steady leak rate of less than 150 gallons per day.

The first indication of the leak was from the main condenser air ejector radiation monitors reaching their alarm set point. The radiation monitors continuously sample from a vent stack for the purpose of rapidly identifying steam generator tube leaks. This was a direct release of

radioactivity to the atmosphere, which is allowed by the facility license, up to limits in the regulations. The licensee reviewed the amount of gaseous radioactivity released and estimated a dose of approximately 0.0000452 mrem to a member of the public. The annual regulatory limit to a member of the public is 100 mrem per year. During a radiation protection inspection the week of February 13, 2012, the team reviewed the licensee dose estimates and did not identify any issues.

Unit 3 control room operators performed a controlled shutdown of Unit 3 on January 31, 2012, and reached cold shutdown conditions on February 2, 2012. The operators then prepared the steam generators for tube inspections, which were started on February 12, 2012. The first inspection confirmed the location of the leak in steam generator 3E0-88. One tube was found with a small leak and no other tubes were leaking.

The licensee completed an extensive and expanded eddy current inspection of 100 percent of the steam generator tubes in both Unit 3 steam generators. Following pre-established testing requirements, the licensee identified 129 tubes in Unit 3 (56 tubes in steam generator 3E0-89 and 73 tubes in steam generator 3E0-88) that required in-situ pressure testing. This testing began on March 13, 2012, and was performed under ambient conditions.

Of the 129 tubes tested, a total of 8 tubes failed in-situ pressure testing which included the original tube that was leaking. All of the failed tubes occurred in steam generator 3E0-88. Three of the tubes failed at or below a test pressure (3200 psi) equivalent to a design basis main steam line break differential pressure and temperature. The remaining five tubes failed near, but below the maximum differential test pressure of 5250 psig. This test pressure was equivalent to the minimum burst pressure capacity required by the plant technical specifications.

In accordance with Management Directive 8.3, "NRC Incident Investigation Program," deterministic and conditional risk criteria were used to evaluate the level of NRC response for this operational event. This event met three deterministic criteria (involved a major deficiency in design having potential generic safety implications; led to a significant loss of integrity of the primary coolant pressure boundary; and, involved an emergency or non-emergency event or situation, related to the health and safety of the public or on-site personnel or protection of the environment, for which a 10 CFR 50.72 report has been submitted that is expected to cause significant, heightened public or government concern) and the conditional large early release probability for the event was estimated to be in the overlap range for a special inspection/augmented inspection. Based on deterministic criteria being met and the risk assessment of this condition, Region IV, in consultation with the Office of Nuclear Reactor Regulation and Office of Nuclear Security and Incident Response, concluded that the NRC response should be an augmented team inspection.

This augmented inspection was chartered, in part, to ~~review~~identify the circumstances surrounding the tube degradation; review the licensee's actions following discovery of the conditions; evaluate the licensee's ~~determination~~review of ~~the~~potential causes of the unusual steam generator tube wear; review the steam generator modeling; and, assess the differences between Unit 2 and Unit 3 steam generators. ~~The charter is available in ADAMS at ML12075A258. It is not the responsibility of an AIT to determine compliance with the NRC rules~~

~~and regulations or to recommend enforcement actions, this will be done through subsequent NRC inspection or review.~~

~~The~~ Based on inspection, the team concluded that: (1) plant operators responded to the ~~January 31, 2012, steam generator tube leak~~event in accordance with procedures ~~and~~ in a manner that protected public health and safety~~. Plant~~; (2) safety systems ~~worked as expected during the event.~~

~~The NRC team identified ten~~were maintained and responded in accordance with the plant design; and (3) the loss of steam generator tube integrity was a serious safety issue that must be resolved. The purpose of this inspection was to gather facts and identify issues requiring followup, and, as such, no findings were identified. Ten items requiring additional ~~review for regulatory action. These items~~followup are documented as "unresolved" items in the enclosed report. ~~The NRC will conduct subsequent inspections or reviews to determine what, if any, regulatory actions result from the "unresolved" items.~~

~~SONGS Unit 3 steam generators had experienced excessive vibration of tubes in the U-bend region of the steam generators to the extent that the tubes rubbed against each other (tube-to-tube interactions) causing excessive wear and loss of structural integrity. Your staff determined that the vibration was caused by the steam conditions in the U-bend region of the steam generators by a phenomenon called "fluid elastic instability." The NRC inspection team concluded that the steam generators' design and configuration did not provide the necessary margin to prevent this phenomenon.~~

~~Although the steam generator tube degradation from this phenomenon observed in Unit 2 steam generators was not as severe, the NRC team concluded that both units' steam generators were of similar design with similar thermal hydraulic conditions and configurations. Therefore, SONGS Unit 2 steam generators are also susceptible to this phenomenon.~~

~~Accordingly, as documented in NRC Confirmatory Action Letter dated March 27, 2012, (ML12087A323), you are required to submit in writing to NRC for review and acceptance, your actions and plans to prevent recurrence of loss of tube integrity before the resumption of power operations in both SONGS Units 2 and 3.~~

In accordance with 10 CFR 2.390 of the NRC's "Rules of Practice," a copy of this letter, its enclosure, and your response (if any) will be available electronically for public inspection in the NRC Public Document Room or from the Publicly Available Records (PARS) component of the NRC's document system (ADAMS). ADAMS is accessible from the NRC Web site at http://www.nrc.gov/reading-rm/adams.html (the Public Electronic Reading Room).

Sincerely,

~~/RA/~~

Elmo E. Collins
Regional Administrator

Docket No.: ~~50-361, 50-362~~05000362
License No: NPF-~~10, NPF-~~15

Enclosure:
~~1.~~ Inspection Report ~~05000361/2012007 and~~ 05000362/~~2012007~~2012-007

w/Attachment~~(s):~~
~~1.~~ Supplemental Information
~~2. Sequence of Events~~

Form

cc w/ encl: Electronic Distribution

DISTRIBUTION:

~~(Ray.KellerDale.Powers@nrc.gov)~~

Regional Administrator (Elmo.Collins@nrc.gov)
Deputy Regional Administrator (Art.Howell@nrc.gov)
DRP Director (Kriss.Kennedy@nrc.gov)
DRP Deputy Director (Allen.Howe@nrc.gov)
DRS Director (Tom.Blount@nrc.gov)
DRS Deputy Director (Patrick.Louden@nrc.gov)
Senior Resident Inspector (Greg.Warnick@nrc.gov)
Resident Inspector (John.Reynoso@nrc.gov)
SONGS Administrative Assistant (Heather.Hutchinson@nrc.gov)
Branch Chief, DRS/PSB2 (Greg.Werner@nrc.gov)
Branch Chief, DRP/D (Ryan.Lantz@nrc.gov)
Senior Project Engineer, DRP/D (Nick.Taylor@nrc.gov)
Project Engineer, DRP/D (David.You@nrc.gov)
Project Engineer, DRP/D (Brian.Parks@nrc.gov)
Public Affairs Officer (Victor.Dricks@nrc.gov)
Public Affairs Officer (Lara.Uselding@nrc.gov)
Branch Chief, DRS/TSB

RITS Coordinator (Marisa.Herrera@nrc.gov)
Regional Counsel (Karla.Fuller@nrc.gov)
Congressional Affairs Officer (Jenny.Weil@nrc.gov)
OEMail Resource
RIV/ETA: OEDO (Michael.McCoppin@nrc.gov)
DRS/TSB STA (Dale.Powers@nrc.gov)
RSLO (Bill.Maier@nrc.gov)
D/DIR, DORL (Louise.Lund@nrc.gov)
PM (Randy.Hall@nrc.gov)
D: NRR (Eric.Leeds@nrc.gov)
D: NSIR (Jim.Wiggins@nrc.gov)
D: NRO (Glen.Tracy@nrc.gov)
NRR/LPL4 (Michael.Markley@nrc.gov)
NRR/IOEB (Harold.Chernoff@nrc.gov)
~~NRR/DORL (Doug.Broddus@nrc.gov)~~
EDO (Bill.Borchardt@nrc.gov)
DEDR (Michael.Johnson@nrc.gov)
DIR, DORL Michele.Evans@nrc.gov

DOCUMENT NAME: S:DRS\REPORTS\SONGS 2012007 AIT-GEW
~~ADAMS Accession No.:~~ ML12188A748

| | | | | | |
|---|---|---|---|---|---|
| SUNSI Rev Compl. | ☑Yes ☐ No | ADAMS | ☑Yes ☐ No | Reviewer Initials | GEW |
| Publicly Avail. | ☑Yes ☐ No | Sensitive | ☐Yes ☑ No | Sens. Type Initials | GEW |

| | | | | | |
|---|---|---|---|---|---|
| ~~DRS/PSB1~~AIT Member/RIV | AIT Member/~~RIV~~RII | AIT Member/~~RII~~NRO | AIT Member/~~NRO~~NRR | AIT Member/NRR | AIT Member/~~NRR~~RES |
| ~~GWerner~~JReynoso | ~~JReynoso~~JRivera-Ortiz | ~~JRivera-Ortiz~~JOrtega-Luciano | ~~JOrtega-Luciano~~EMurphy | ~~EMurphy~~AJohnson | ~~AJohnson~~CThurston |
| ~~GEW /RA/~~ | ~~Per e-mail~~ | ~~Per e-mail~~ | ~~Per e-mail~~ | ~~Per e-mail~~ | ~~Per e-mail~~ |
| ~~07/09/12~~ | ~~07/10/12~~ | ~~07/09/12~~ | ~~07/09/12~~ | ~~07/12/12~~ | ~~07/12/12~~ |
| AIT ~~Member/RES~~ Team Leader/RIV | ~~SRA/RIV~~D:DRS | ~~AIT Team Leader/RIV~~BC/D:DRP | ~~D:DRS~~DRA | RA | ~~RA~~ |
| ~~CThurston~~GWerner | ~~MRunyan~~TBlount | ~~GWerner~~RLantz | ~~TBlount~~AHowell | ECollins | ~~ECollins~~ |
| ~~Per e-mail~~ | ~~Per e-mail~~ | ~~GEW /RA/~~ | ~~TB /RA/~~ | | ~~/RA/~~ |
| ~~07/11/12~~ | ~~07/12/12~~ | ~~07/12/12~~ | ~~07/13/2012~~ | | ~~07/18/2012~~ |

OFFICIAL RECORD COPY

DIR, DIRS Ho.Nieh@nrc.gov
D/DIR, DIRS John.Lubinski@nrc.gov

Form

## EXECUTIVE SUMMARY

On ~~March 19, 2012, an Augmented Inspection Team (AIT) was dispatched to~~January 31, 2012, San Onofre Nuclear Generating Station ~~to gather facts and understand the circumstances surrounding the January 31, 2012~~(SONGS) Unit 3 control room operators received an alarm that indicated a primary-to-secondary ~~leak~~ reactor coolant leak from steam generator 3E0-88. Although the leak rate was small, it increased enough in a short period of time for the licensee to perform a rapid shutdown. The estimated leak rate was 75 gallons per day. The facility license allows full power operation with a steady state leak rate of less than 150 gallons per day. On February 2, 2012, Unit 3 reached cold shutdown conditions.

On February 12, 2012, Southern California Edison (SCE) commenced eddy current inspections of 100 percent of the tubes in both Unit 3 steam generators. During these inspections, the licensee discovered unexpected wear in both steam generators, including wear at retainer bars (similar to the wear found in Unit 2 steam generators) and significant tube-to-tube wear in the free-span areas. The inspections identified 56 tubes in steam generator 3E0-89 and ~~failure of eight~~73 tubes in steam generator ~~tubes~~ 3E0-88 that SCE performed in-situ pressure testing on to ~~maintain~~determine if they met the structural integrity ~~as required by~~requirements in plant technical specifications ~~during testing~~.

From March 13 – 21, 2012, AREVA conducted in-situ pressure testing of the suspect tubes in both steam generators. There were a total of eight tube failures during testing, all in steam generator 3E0-88. These tubes failed to satisfy the tube integrity performance criteria. At the time of the augmented team inspection, no stabilization or plugging of tubes had been performed in Unit 3 because the licensee was still conducting a cause evaluation of the failed tubes. There were two members of the Augmented Inspection Team on-site during the week of March ~~13, 2012. The primary-to-secondary leak was the result of a single tube in Unit 3 steam generator 3E0-88 failing to maintain structural integrity.~~ 12 that observed portions of the in-situ pressure testing.

~~Specifically the AIT was chartered to review the circumstances surrounding the tube degradation; review the licensee's actions following discovery of the conditions; evaluate the licensee's determination of the causes of the unusual steam generator tube wear; review the steam generator modeling; and, assess the differences between Unit 2 and Unit 3 steam generators.~~

~~The team determined that plant operators responded to the event in a manner that protected public health and safety and all safety systems performed their functions to support the safe shutdown and cooldown of the plant. However, the loss of steam generator tube integrity is a serious safety issue that must be resolved prior to further power operation.~~

~~The AIT~~On March 23, 2012, NRC received a letter from SCE outlining their commitments for corrective actions prior to restart of both Unit 2 and Unit 3.

On March 27, 2012, the NRC issued a Confirmatory Action Letter to SCE, which outlined specific actions the licensee must complete before restarting Units 2 and 3 that included identifying the cause of the tube wear; taking corrective actions to prevent loss of tube integrity; and performing a mid-cycle outage to perform tube inspections.

From March 19 – 29, 2012, the NRC Augmented Inspection Team performed on-site inspections at SONGS. After the on-site portion was completed, the team continued to review various documents and attended a number of expert panels associated with the cause evaluations, thermal/hydraulic modeling, and Unit 2 operational assessment. The team identified ten unresolved items that warranted additional follow-up: (1) adequacy of the post trip/transient procedure; (2) evaluation and disposition of the Unit 3 loose parts monitor alarms; (3) design of retainer bar; (4) control of original design dimensions; (5) evaluation of and controls for divider plate repair; (6) atmospheric controls of Unit 3 steam generators during shipment; (7) no tube bundle support used during shipping; (8) evaluation and disposition of ~~accelerometer readings during shipping~~accelerometers; (9) adequacy of Mitsubishi's thermal-hydraulic model; and (10) change of methodologies associated with 10 CFR 50.59 review. ~~Consistent with existing NRC inspection processes, these unresolved issues will be inspected and dispositioned during follow-up inspection efforts to determine if there are any violations of regulatory requirements.~~

~~The AIT inspection~~

The team determined: (1) plant operators responded to the event in accordance with procedures in a manner that protected public health and safety; (2) equipment responded in accordance with the plant design; and (3) the cause evaluations for Unit 2 and Unit 3 tube wear were appropriate.

At the time of the leak on Unit 3 steam generator 3E0-88, Unit 2 had completed eddy current testing of all the tubes in both steam generators as part of their first refueling outage subsequent to the steam generators being replaced in 2009. The eddy current testing did identify significant tube wear around the upper retainer bar, with one tube requiring in-situ pressure testing. Wear indications were found at anti-vibration bar supports, tube support plates and at a foreign object (that was removed). Southern California Edison did determine the cause of tube wear in Unit 2 to be from vibration of the tubes against the retainer and anti-vibration bars. Initially, no tube-to-tube wear was identified. Because of the extensive tube-to-tube wear identified on Unit 3, SCE conducted additional eddy current testing on 1375 tubes on each Unit 2 steam generator. This testing was completed using a more sensitive probe in the same area where tube-to-tube wear was identified on Unit 3. The licensee identified that two tubes in Unit 2 exhibited tube-to-tube wear similar to the wear identified in Unit 3 steam generators. Initially, these findings resulted in a total of 94 plugged tubes, with 15 tubes stabilized in steam generator 2E0-89. For steam generator 2E0-88 this initially resulted in 98 plugged tubes, with 18 tubes stabilized. Additional plugging and stabilizing was completed for Unit 2 steam generators to address the causes of

tube-to-tube wear identified. The corrective actions taken to address the causes of the tube-to-tube wear will be inspected as part of the Confirmatory Action Letter and documented in Inspection Report 05000361, 362/2012009.

Overall, the team concluded that: ~~(1)~~ SCE was ~~adequately~~ pursuing the causes of the unexpected Unit 3 steam generator tube-to-tube degradation. In an effort to identify the causes, SCE ~~retained~~brought in a ~~significant~~large number of outside industry experts, consultants, and steam generator manufacturers, including Westinghouse and AREVA to perform thermal-hydraulic and flow induced vibration modeling and analysis; ~~(2) The~~. The licensee identified the most probable causes of the tube-to-tube wear as a combination of ~~unpredicted, adverse~~higher than predicted thermal-/hydraulic conditions and ~~insufficient~~improvements in the manufacturing of the Unit 3 steam generators. The improvements in the manufacturing resulted in less contact forces ~~in the upper tube bundle caused a phenomenon called~~ "between the anti-vibration bars and the tubes. The combination of these causes allowed fluid-elastic instability" ~~which was a significant contributor to the tube to tube wear resulting in the tube leak. The team concluded that the differences in severity of the tube-to-tube wear between Unit 2 and Unit 3 may be related to the changes to the manufacturing/fabrication of the tubes and other components which may have resulted in increased clearance between the anti-vibration bars and the tubes; (3) Due to modeling errors, the SONGS replacement generators were not designed with adequate thermal hydraulic margin to preclude the onset of fluid-elastic instability. Unless changes are made to the operation or configuration of the steam generators, high fluid velocities and high void fractions in localized regions in the u-bend will continue to cause excessive tube wear and accelerated wear that could result in tube leakage and/or tube rupture; (4) The thermal hydraulic phenomena contributing to the fluid elastic instability is present in both Unit 2 and 3 steam generators; (5) Based on the updated final safety analysis report description of the original steam generators, the steam generators major design changes were appropriately reviewed in accordance with the 10 CFR 50.59 requirements. However, further review is required related to the change in methodology used for the steam generator stress analysis calculations.~~ vibration to occur. Additional on-site inspection will be required to review and closeout the unresolved items.

~~With regard to the radiological release as a result of the tube leak, it was determined that the tube leak was detected by the condenser steam jet air ejector radiation monitor as per design. In addition, the radiation monitor alarmed and alerted SONGS operators of the steam generator tube leak as required. The release resulted in an estimated 0.0000452 (4.52 E-5) mrem dose to the public.~~

TABLE OF CONTENTS


EXECUTIVE SUMMARY ..... 1

SUMMARY OF FINDINGS ..... 2

~~SUMMARY OF FINDINGS~~ ..... ~~1.0~~
Description of Event (Charter Item 1) ..... 3

~~1.0 Description~~1 ..... Sequence of ~~Event (Charter Item 1)~~Events ..... 3

~~1.1 Sequence of Events~~2 ..... System Descriptions ..... 6

~~1.2 System Descriptions~~ ..... ~~1.3~~
Resident Inspectors' Assessment of Steam Generator Tube Leak Event Response ..... 7

~~1.3 Resident Inspectors' Assessment~~4 ..... Description of Steam Generator ~~Tube Leak Event Response~~Inspections at SONGS Unit 2 ..... 11

~~1.4~~5 Description of Steam Generator Inspections at SONGS Unit ~~2~~3 ..... 14

~~1.5 Description of Steam Generator Inspections at SONGS Unit 3~~ ..... ~~1.6~~
In-Situ Pressure Testing ..... 17

~~1.6 In-Situ Pressure Testing~~ ..... ~~2.0~~
Probable Cause Evaluation (Charter Item 2) ..... 19

~~2.0 Probable~~1 ..... SONGS Cause Evaluation ~~(Charter Item 2)~~ ..... 19

~~2.1 SCE~~2 ..... Mitsubishi Cause Evaluation ..... 21

~~2.2 Mitsubishi Cause Evaluation~~ ..... ~~3.0~~
Operational Differences in Configuration and Operation Between Unit 2 and 3 (Charter Item 3) ..... 23

~~3~~4.0 ~~Operational~~ ..... Design and Manufacturing Differences ~~in Configuration and Operation between Unit 2 and 3~~ ~~(Charter Item 3~~Item #4) (Mitsubishi Heavy Industries Charter Item 1) ..... 25

~~4~~5.0 ~~Design and Manufacturing Differences~~ .. Quality Assurance/Quality Control (Charter Item #~~4~~5) (Mitsubishi Charter Item ~~1~~4) ..... 40

5.0 ~~1~~ .. SONGS Quality Assurance/Quality Control ~~(Charter Item 5) (Mitsubishi Charter Item 4)~~ ..... 40

~~5.1 SONGS~~2 ..... Mitsubishi Heavy Industries Quality Assurance/Quality Control ..... 42

~~5.2 Mitsubishi~~ 3 ..... Quality Assurance~~/Quality Control~~ Conclusion ..... 44

~~5.3 Quality Assurance Conclusion~~ ..... 6.0
Implementation of Steam Generator Industry Information (Charter Item 6) (Mitsubishi Heavy Industries Charter Item 3) ..... - 44 -

~~6.0 Implementation of Steam Generator Industry Information (Charter Item 6) (Mitsubishi Charter Item 3)~~ ..... 7.0
..... Packing, Shipping, Handling, and Receipt Inspection (Charter Item 7)
..... - 47 -

~~7~~8.0 ~~Packing, Shipping, Handling,~~Thermal-hydraulic and ~~Receipt Inspection~~Flow Induced Vibration Modeling (Charter Item ~~7)~~ ..... - 48 -8)
..... 50

8.~~0~~1 Thermal-hydraulic ~~and Flow Induced Vibration Modeling (Charter Item 8)~~Assessments - 52 -

~~9.0 Risk Assessment (Charter Item 9)~~ ..... 8.2
..... NRC ATHOS Results
..... - 56 -

~~10.0 Assess Quality Assurance, Radiological Controls, and Safety Culture Components (Charter Item 10)~~ ..... 8.3
..... Conclusion
..... - 62 -

~~11~~9.0 ~~Operational impacts from Unit 3 to Unit 2~~Risk Assessment (Charter Item ~~11~~9) ..... - 64 -

~~12~~10.0 ~~Divider Plate Manufacturing~~ Assess Quality Assurance, Radiological Controls, and ~~Weld Issues (Mitsubishi~~ Safety Culture Components (Charter Item ~~2~~10) ..... - 64 -

~~13.0 Office of Nuclear Reactor Regulation (NRR) Review of SONGS 50.59 Evaluation~~ 11.0
..... Operational impacts from Unit 3 to Unit 2 (Charter Item 11)
..... - 66 -

~~14.0 Exit Meeting Summary~~ ..... 12.0
.... Mitsubishi Divider Plate Manufacturing and Weld Issues (Mitsubishi Heavy Industries Charter Item 2)
..... - 67 -

~~ATTACHMENT 1 SUPPLEMENTAL INFORMATION~~ ..... ~~A1~~ 13.0
..... Office of Nuclear Reactor Regulation Review of SONGS 50.59 Evaluation
..... - 72 -

~~ATTACHMENT 2 SEQUENCE OF EVENTS~~ ..... ~~A2~~ 14.0
..... Exit Meeting Summary
..... - 74 -

ATTACHMENT 1: SUPPLEMENTAL INFORMATION ..... A1-1

ATTACHMENT 2: SEQUENCE OF EVENTS ..... A2-1

**U.S. NUCLEAR REGULATORY COMMISSION**
**REGION IV**

| | |
|---|---|
| Docket: | ~~50-361, 50-362~~05000362 |
| License: | ~~NPF-10, NPF-15~~ |
| Report: | ~~05000361/2012007 and~~ 05000362/2012007 |
| Licensee: | Southern California Edison Company |
| Facility: | San Onofre Nuclear Generating Station~~, Unit 2 and 3~~ |
| Location: | 5000 S. Pacific Coast Hwy<br>San Clemente, California |
| Dates: | March 15 through June 18, 2012 |
| Team Leader: | G. Werner, RIV/Branch Chief/Plant Support Branch 2 |
| Inspectors: | A. Johnson, NRR/Materials Engineer<br>E. Murphy, NRR/Senior Materials Engineer<br>J. Ortega-Luciano, NRO/Reactor Operations Engineer<br>J. Reynoso, RIV/Resident Inspector<br>J. Rivera-Ortiz, RII/Senior Reactor Inspector<br>C. Thurston, RES/Reactor Systems Engineer |
| Approved By: | Elmo E. Collins, Regional Administrator |

## SUMMARY OF FINDINGS

IR 05000361/2012007, IR 05000362/2012007, 03/15/2012 through 06/18/2012, San Onofre Nuclear Generating Station; Augmented Inspection Team.

An Augmented Inspection Team was approved on March 16, 2012. Two inspectors on the team were onsite observing in-situ pressure testing the week of March 12. The remaining inspectors were dispatched to the site on March 19, 2012, to assess the facts and circumstances surrounding the tube leak and unexpected wear of tubes in Unit 3 steam generators. The Augmented Inspection Team was established in accordance with NRC Management Directive 8.3, "NRC Incident Investigation Program," and implemented using Inspection Procedure 93800, "Augmented Inspection Team." The inspection was conducted by a team of inspectors from the NRC's Region IV and Region II offices, the resident inspector from San Onofre Nuclear Generating Station, one engineer from the NRC Office of New Reactors, two engineers from the NRC Office of Nuclear Reactor Regulation, and one engineer from the NRC Office of Research. The team identified 10 issues that will require additional NRC inspection. These issues are tracked as unresolved items in this report.

A. NRC-Identified and Self-Revealing Findings

None

B. Licensee-Identified Violations

None

1.0 Description of Event (Charter Item 1)

1.1 Sequence of Events

In November 2001, SCE formed a team to study the viability of replacing the Unit 2 and Unit 3 original steam generators. The licensee performed an assessment of six steam generator vendors, which included vendor benchmarking, development of the replacement steam generator design specifications, a steam generator request for proposal, and a steam generator bid evaluation. In September 2004, the licensee selected Mitsubishi Heavy Industries (Mitsubishi) as the manufacturer of the replacement steam generator.

A general description and comparison of the Unit 2 and Unit 3 steam generators is included in Section 1.2.1 of this report.

In September 2004, Mitsubishi commenced fabrication of Unit 2 steam generators 2E0-89 and 2E0-88, and completed fabrication in April 2008.

At the time of the contract signing in September 2004, Mitsubishi had a quality assurance program in place that had been approved by the licensee, by taking credit for other utilities' reviews of Mitsubishi's quality assurance program. The licensee informed Mitsubishi that once enough fabrication was underway to support an evaluation, the licensee would perform an audit to confirm that their quality assurance program was operating properly.

In November 2004, the licensee performed an audit of the Mitsubishi quality assurance program at their facilities in Kobe, Japan, and then followed up with a surveillance inspection in March 2005. As a result of these two activities, the licensee informed Mitsubishi that additional oversight of Mitsubishi's design control activities was required. The licensee informed Mitsubishi that the additional oversight conditions would remain in place until such time that Mitsubishi had demonstrated improved design control performance, which would be verified by the licensee. After implementing the extra quality control steps, Mitsubishi submitted a letter to SCE stating that they were ready for the conditional qualification to be lifted. The licensee performed followup audits of Mitsubishi in October 2005 and February 2006, but still found enough instances of design control issues that the additional oversight requirements of the conditional qualification were not lifted. In May 2006, SCE was able to verify that Mitsubishi had demonstrated improved design control performance and therefore removed the conditional qualification of Mitsubishi.

After fabrication of the Unit 2 steam generators was complete in April 2008, Mitsubishi performed hydrostatic pressure tests of the primary and secondary sides of the Unit 2 steam generators. In July 2008, after completion of the hydrostatic pressure tests, AREVA performed the baseline eddy current pre-service examinations of the Unit 2 steam generators at the Mitsubishi facilities in Japan. The final inspections for the Unit 2 steam generators were completed in September and October 2008, followed by filling the primary and secondary sides of the Unit 2 steam generators with nitrogen. The Unit 2 steam generators were shipped from the Mitsubishi facilities in December 2008 and received on site at SONGS in February 2009. In July 2009, AREVA performed the

final eddy current pre-service examination on the Unit 2 steam generators at SONGS. The baseline and final eddy current pre-service examinations were performed in Japan and at SONGS, respectively, to assess whether any changes to the steam generator tubing had resulted from shipping, and no changes were identified.

The Unit 2 steam generators were installed during a refueling outage, between September 2009 and April 2010. On April 13, 2010, Unit 2 returned to power operations. NRC ~~engineering~~Engineering inspectors performed inspections in accordance with procedures IP 50001 (Inspection ~~Procedure 50001, "50.59), Steam Generator Replacement Inspection,"~~ and ~~Inspection Procedure~~IP 71111.17, "Evaluations of Changes, Tests, or Experiments and Permanent Plant Modifications." ~~This included a review of selected portions of modifications associated with the replacement steam generators to determine if the changes were done in accordance with 10 CFR 50.59.~~ The results of the ~~inspection~~inspections of the replacement steam generators for Unit 2 are documented in NRC Inspection Report 05000361/2009007. ~~(ML100630838)~~

The fabrication of the Unit 3 steam generators 3E0-89 and 3E0-88 was completed between September 2004 and April 2010. The design specifications of the Unit 2 and Unit 3 steam generators were the same when the contract between the licensee and Mitsubishi was signed; however, due to a fabrication issue, there was a modification to the divider plate-to-channel head weld requirements for the Unit 3 steam generators, and to the classification of the Unit 3 tubesheet material. The specifics of these modifications are discussed further in Section 1.2.a of this report.

In March 2009, after initial fabrication of the Unit 3 steam generators was complete, Mitsubishi performed hydrostatic pressure tests of the primary and secondary sides of the Unit 3 steam generators. After completion of the hydrostatic pressure tests, a visual inspection of the steam generator reactor coolant side revealed cracks in the welds that join the divider plate to the channel head of both steam generators.

From March through July of 2009, Mitsubishi performed a root cause evaluation, which showed that a change in the weld preparation process for the divider plate-to-channel head weld had resulted in the cracking of the weld. A repair procedure was developed and repair work on the Unit 3 steam generators began in June 2009. The repairs to the Unit 3 steam generators were completed in late March (3E0-89) and early April (3E0-88) of 2010. In late April 2010, the Unit 3 steam generators passed the primary hydrostatic pressure re-tests. In June 2010, AREVA performed a final eddy current pre-service examination of the steam generators at the Mitsubishi facilities in Japan, and this was used as the baseline pre-service examination for the Unit 3 steam generators. The steam generators were shipped from the Mitsubishi facilities in Japan in early August 2010, and arrived at SONGS in early October 2010.

The Unit 3 steam generators were installed during a refueling outage, between October 2010 and February 2011. On February 18, 2011, Unit 3 returned to power operations. ~~NRC engineering~~Engineering inspectors performed inspections in accordance with ~~Inspection Procedure~~procedures IP 50001, "Steam Generator Replacement Inspection," and ~~Inspection Procedure~~IP 71111.17, "Evaluations of Changes, Tests, or Experiments and Permanent Plant Modifications." ~~This included a review of selected portions of modifications associated with the replacement steam generators to determine if the~~

Form

~~changes were done in accordance with 10 CFR 50.59~~. The results of the ~~inspection~~inspections of the replacement steam generators for Unit 3 are documented in NRC Inspection Report 05000362/2010009. ~~(ML111300448)~~

Unit 2 was shut down for a scheduled refueling outage on January 10, 2012. Steam generator tubing inspections in steam generator 2E0-89 found unexpected wear caused by retainer bars on two tubes that required plugging in accordance with the technical specifications. Steam generator tubing inspections in steam generator 2E0-88 found wear on four tubes that required plugging in accordance with the technical specifications. Anti-vibration bars caused the wear on two of the tubes and retainer bars caused the wear on the other two tubes. Because of the unexpected wear, the licensee preventatively plugged 94 tubes in steam generator 2E0-89 and 98 tubes in steam generator 2E0-88. Fifteen of the tubes in steam generator 2E0-89 were stabilized prior to plugging, and 18 of the tubes in steam generator 2E0-88 were stabilized prior to plugging. Additional details of the inspections of the Unit 2 steam generators are provided in section 1.4 of this report

On January 31, 2012, Unit 3 control room operators received an alarm that indicated a primary-to-secondary reactor coolant leak from steam generator 3E0-88. The alarm received was from the main condenser air ejector radiation monitors, which continuously samples from a vent line for the purpose of rapidly identifying steam generator tube leaks. Although the leak rate was small, it increased enough in a short period of time for the licensee to perform a rapid shutdown. The estimated leak rate was 75 gallons per day. The facility license allows full power operation with a steady state leak rate of less than 150 gallons per day. On February 2, 2012, Unit 3 reached cold shutdown conditions. The licensee reviewed the amount of gaseous radioactivity released and estimated a dose of approximately 0.0000452 mrem to a member of the public. The annual regulatory limit to a member of the public is 100 mrem per year. This unplanned offsite release of radioactivity was reviewed by Region IV health physicist inspectors who confirmed SONGS' offsite dose estimate (see Section 10 for additional details).

After shutdown, the licensee started preparations for performing inspections of Unit 3 steam generators 3E0-89 and 3E0-88. The steam generator tube inspections commenced on February 12, 2012, and confirmed the location of the leak in steam generator 3E0-88 as coming from the tube in Row 106 Column 78. No other tubes were found to be leaking. The licensee then performed eddy current inspections of 100 percent of the tubes in both Unit 3 steam generators. During these inspections, the licensee discovered unexpected wear in both steam generators, including wear at retainer bars (similar to the wear found in Unit 2 steam generators) and significant tube-to-tube wear in the freespan areas (u-bend area of the tubes). The inspections identified 56 tubes in steam generator 3E0-89 and 73 tubes in steam generator 3E0-88 that SCE performed in-situ pressure testing on to determine if they met the structural integrity requirements in plant technical specifications. Additional details of the inspections of the Unit 3 steam generators are provided in section 1.5 of this report

From March 13 – 21, 2012, AREVA conducted in-situ pressure testing of the suspect tubes in both steam generators. There were a total of eight tube failures during testing, all in steam generator 3E0-88.

These tubes failed to satisfy the tube integrity performance criteria in the technical specifications. Additional details of the in-situ pressure tests are provided in Section 1.6 of this report.

From March 19 – 29, 2012, the NRC augmented inspection team performed inspections onsite at SONGS.

On March 27, 2012, the NRC issued a Confirmatory Action Letter to SCE, which outlined specific actions for each unit that the licensee must complete before restarting Unit 2 and Unit 3.

A more detailed sequence of events can be found in Attachment 2.

1.2 System Descriptions

a. Replacement Steam Generators

The Unit 2 and Unit 3 replacement steam generators contain thermally treated Alloy 690 tubing in a u-bend configuration, with a nominal outside diameter of 0.750 inches and a nominal wall thickness of 0.043 inches. There are 9727 tubes within each steam generator, which are arranged in 142 rows and 177 columns. The rows and columns are arranged in a nominal 1.000 inch triangular pitch (results in approximately 0.25 inches of clearance between tubes). The first thirteen rows of tubes were thermally stress relieved after bending to reduce susceptibility to stress corrosion cracking. The tubes were hydraulically expanded to the full depth of the tubesheet, which has a nominal thickness of 28.19 inches. Seven tube support plates made of Type 405 stainless steel provide lateral support ~~to~~ the tubes. The tube support plates contain broached trefoil holes with chamfered lands. Support of the tubes in the upper bundle is provided by six sets of Type 405 stainless steel, V-shaped, anti-vibration bars.

The original Model 3410 steam generators at Unit 2 and Unit 3 were manufactured by Combustion Engineering. Each steam generator had 9,350 mill-annealed, Alloy 600 tubes, which were a combination of u-bend tubes and tubes with two 90 degree bends (also called square bends). The tubes had a nominal outside diameter of 0.750 inches, and a nominal wall thickness of 0.048 inches. The tubes were expanded through the full depth of the tubesheet using an explosive process, and lateral support was provided by a number of lattice-grid (i.e., eggcrate) carbon steel tube supports. Tube support in the upper bundle was provided by carbon steel diagonal bars (commonly called batwings) and vertical straps. The original steam generators contained a cylindrically shaped support structure beneath the center of the tubesheet (called the stay cylinder) that provided structural support to the large diameter tubesheet.

Southern California Edison reviewed Information Notices, Generic Letters, Bulletins, and industry operational experience associated with steam generator issues when developing the design specifications for the replacement steam generators. Some of the changes are summarized below, for additional information see Section 6 of this report.

The design changes between the original and replacement steam generators noted above are commonly used in replacement steam generators today. The thermally

treated Alloy 690 tubing provides increased resistance to stress corrosion cracking as compared to thermally treated Alloy 600 tubing. The use of type 405 stainless steel (in lieu of carbon steel) for tube support plates eliminates the denting phenomenon associated with drilled carbon steel support plates. The use of broached trefoil holes (instead of drilled holes) in tube support plates reduces the number of contact points with tubes and increases flow area between the tube and tube support plate, thereby reducing the potential for corrosion products to buildup between the tube and the tube support plate. Combustion Engineering steam generators with the batwing design have typically suffered from wear on tubes (from the batwings) in the central stay cylinder region, due to higher cross flow velocities in this portion of the steam generators. In an effort to eliminate this high flow region, the replacement steam generators were designed with a thicker tubesheet that was inherently more rigid, and thus did not require the central stay cylinder. By choosing a design with all u-bend tubes, the bat wing design was eliminated and a new anti-vibration bar assembly was used. The new anti-vibration bar assembly is a free floating design that is supported by the tube bundle and is not attached to the tube bundle wrapper.

b. Channel Head-to-Divider Plate Weld

On March 18, 2009, after completion of the primary and secondary side hydrostatic pressure tests, a crack in the weld between the divider plate and the channel head on Unit 3 steam generator 3E0-88 was identified . Examination showed that the dissimilar metal weld, between the Alloy 690 divider plate and the low alloy steel channel head, had separated. Specifically, the failure occurred between the channel head and the Alloy 152 butter weld, which is the weld filler wire equivalent of Alloy 690. Upon examination, a similar weld failure was found in steam generator 3E0-89 although the size of the failure was not as large.

Mitsubishi performed a root cause evaluation and found that air carbon-arc gouging was used to remove the stainless steel cladding from the channel head, in preparation for making the divider plate-to-channel head dissimilar metal weld. The air carbon-arc gouging had resulted in carbon deposits in the channel head that were not completely removed by grinding that was performed after the gouging operation. The high carbon area increased the hardness of the channel head (due to carburization) and was the most probable cause of the failure between the channel head and the Alloy 152 butter weld. Mitsubishi also found that it was possible, but less probable, that the increased hardness of the channel head promoted hydrogen induced cracking in areas of the divider plate-to-channel head weld that had higher local stresses due to geometric configurations (i.e., at the corner of the divider plate).

1.3 Resident Inspectors' Assessment of Steam Generator Tube Leak Event Response

a. Inspection Scope

On January 31, 2012, the resident inspectors were on-site during the Unit 3 steam generator tube leak event. The resident inspectors observed the licensee's response to the steam generator tube leak from the control room; and observed the rapid shutdown, actions to cool the plant down, actions performed during recovery of plant systems, and other operator actions. Additionally, the resident inspectors conducted a review of

control room activities and equipment response to determine if the operating crew responded appropriately and if the plant systems responded as expected during the event. The resident inspectors conducted interviews with various on-shift personnel and reviewed the post trip report, which included control room logs, operator statements, and plant data trends to assess overall performance of the crew. The review also included procedure use and adequacy of the guidance used for event response, placing the plant in a safe and stable condition, establishing appropriate parameter limits for plant cooldown, and conducting the cooldown to cold shutdown conditions. With respect to operator awareness and decision making, the resident inspectors were specifically focused on the effectiveness of control board monitoring, technical decision making, and work practices of the operating crew. With respect to command and control, the resident inspectors focused on actions taken by the control room supervision in managing the operating crew's response to the event.

b. Observations and Findings

No findings were identified.

The team identified one unresolved item for which additional information is required to determine if performance deficiencies exist or if the issue constitutes a violation of NRC requirements.

On January 31, 2012, at 3:05 p.m. (PST), main control room operators at Unit 3 received a secondary plant system radiation alarm associated with the air ejectors followed by a blowdown radiation monitor alarm. Operations personnel responded in accordance with Abnormal Operating Instruction SO23-13-14, "Reactor Coolant Leak," Revision 16, since the entry conditions for a steam generator tube leak were satisfied. Operations personnel determined the leakage to be about 75 gallons per day, using a mass balance calculation (.06 gpm), from steam generator 3E0-88. This leak rate was below the Technical Specification 3.4.13, "RCS Operational Leakage," limit of 150 gallons per day for primary- to-secondary leakage through any one steam generator.

At 4:10 p.m., operations personnel evaluated that the primary-to-secondary leak rate exceeded 75 gallons per day on steam generator 3E0-88 and that the leak was increasing at greater than 30 gallons per day per hour, and consequently, initiated a rapid power reduction to be ≤ 50 percent power in one hour and in Mode 3 within the next two hours per Abnormal Operating Instruction SO23-13-14. In accordance with Abnormal Operating Instruction SO23-13-14, when reactor power was less than 35 percent, operations personnel tripped the reactor at 5:31 p.m. to enter Mode 3.

Due to the manual reactor trip, operations personnel entered Emergency Operating Instruction SO23-12-1, "Standard Post Trip Actions," Revision 26, to ensure the plant was placed in a stable, safe condition, and that the plant was configured to respond to the continuing steam generator tube leak event. Operations personnel implemented the emergency operating instructions and isolated the affected steam generator at 6:00 p.m. A plant cooldown was conducted by using main steam bypass from steam generator 3E0-89 to the main condenser. Mode 4 conditions were achieved at approximately 6 hours after isolation of the steam generator. Cooldown continued until Unit 3 was in Mode 5, cold shutdown.

The resident inspectors concluded that abnormal and emergency operating instructions were performed consistent with expected standards and that operations personnel exhibited the fundamental operator competencies in response to the Unit 3 steam generator tube leak event.

Specifically, the resident inspectors determined that the operating crew displayed a questioning attitude of changing plant parameters and took conservative actions. The operating crew identified important preliminary increasing trends of Unit 3 air ejectors radiation monitors and subsequent alarms in a timely manner for a tube leak in steam generator 3E0-88. Additionally, the resident inspectors determined that crew supervision exercised effective oversight of plant status, crew performance, and control room command and control.

(1) Introduction: The team identified an unresolved item associated with Operations Procedure SO123-0-A8, "Trip/Transient and Event Review," that required a formal review of operator actions and safety systems to determine if important systems responded as design. The formal review was not completed.

Description: On March 19, 2012, the team requested to review the results of operations post trip/transient evaluation of the January 31, Unit 3 tube leak event. Operations Procedure SO123-0-A8, "Trip/Transient and Event Review," Revision 8, required a detailed post trip review following unplanned reactor trips. However, a formal trip/transient and event review was not available because operations personnel determined the Unit 3 event was planned and therefore a formal review was not required.

On March 27, 2012, Team met with operations personnel to discuss items on a draft Unit 3 trip/transient evaluation provided to the team. The team also discussed with operations personnel the requirements in Operations Procedure SO123-0-A8, and concluded a basis for what was "planned" and "unplanned" was not defined. Operations personnel determined the Unit 3 reactor trip was a planned reactor trip because Abnormal Operating Instruction SO23-13-14, "Reactor Coolant Leak," Revision 16, Section 4, had described actions for primary-to-secondary leakage. Specifically, this section stated, in part, under plant conditions of increasing steam generator tube leakage, operations personnel were required to perform a rapid power reduction to less than 35 percent power, then trip the reactor.

The team discussed with operations personnel that definitions for unplanned events have been established through industry standards to report on plant performance. These standards include NEI 99-02, "Regulatory Assessment Performance Indicator Guideline," Revision 6. Industry Guidance NEI 99-02 indicated that Unit 3 reactor trip should be considered unplanned since the reactor trip was required by an abnormal operating instruction and would count against the performance indicator for unplanned reactor trips. NRC Regulatory Issue Summary (RIS) 2000-08, "Voluntary Submission of Performance Indicator Data," Revision 1, allows industry to use NEI 99-02 to report performance indicator data.

Additional review and follow up will be required to review the corrective actions associated with the procedural guidance for an event review and then determine whether this issue represents a performance deficiency or constitutes a violation of NRC requirements. This issue is identified as URI 05000362/2012007-01, "Adequacy of the Trip/Transient and Event Review Procedure."

~~c. Conclusions~~

~~The resident inspectors concluded that abnormal and emergency operating instructions were performed consistent with expected standard and that operations personnel exhibited the fundamental operator competencies in response to the Unit 3 steam generator tube leak.~~

~~Specifically, the resident inspectors determined that the operating crew displayed a questioning attitude of changing plant parameters and took conservative actions. The operating crew identified important preliminary increasing trends of Unit 3 air ejectors radiation monitors and subsequent alarms in a timely manner for a tube leak in steam generator 3E0-88. Additionally, the resident inspectors determined that crew supervision exercised effective oversight of plant status, crew performance, and control room command and control.~~

~~The team identified one unresolved item associated with the adequacy of the trip/transient procedure.~~

1.4 Description of Steam Generator Inspections at SONGS Unit 2

On January 10, 2012, SONGS Unit 2 was shutdown for a refueling outage. Southern California Edison personnel conducted a scheduled steam generator inspection in accordance with Technical Specification ~~5.5.2.11~~6.6.9, "Steam Generator (SG) Program." This was the first inspection of the Unit 2 steam generators since their replacement in January 2010. The accumulated operating time on the replacement Unit 2 steam generators was 1.7 effective full power years. There was no reported primary-to-secondary leakage at the time of shutdown.

The scope of the inspection included a 100 percent tube sample with an eddy current test bobbin probe over the full tube length, followup rotating coil inspections at special interest locations, and a secondary side foreign object search and retrieval. Three types of flaw indications were found in the tubes:

- Wear at the tube support plate and anti-vibration bar supports
- Wear caused by a loose part
- Wear at retainer bars

With the exception of the wear indications found at tube retainer bar locations, the wear indications found are similar to those found at other replacement steam generators after one cycle of operation. A total of 2411 tubes were found with indications at the tube support plates and anti-vibration bar supports, the vast majority of which had a measured depth of less than 20 percent of the tube wall thickness. Only two of these indications, located at the anti-vibration bar supports, exceeded the Technical Specification ~~5.5.2.11~~6.6.9.c repair limit of 35 percent of the tube wall thickness. The two affected tubes plus two additional tubes with 31 percent deep indications were stabilized and plugged.

Southern California Edison performed a reanalysis of the bobbin probe eddy current data collected during the Unit 2 inspection program. This reanalysis was performed after the finding of the long free-span indications in Unit 3, allowing insights gained during the Unit 3 inspections to be applied to the Unit 2 data. The scope of this reanalysis was a "box" of 1000 tubes in each Unit 2 steam generator which bounded the region of tubing affected by the instability damage in Unit 3. This reanalysis~~, using the bobbin probe,~~ confirmed the results of the original analysis and did not identify any tube-to-tube wear.

Two tubes were found with indications (less than 35 percent through wall) caused by a small loose part on the secondary side. This loose part was removed from the steam generator. Metallurgical analysis indicated the loose part was a piece of weld metal, most likely introduced during steam generator manufacturing operations. The two affected tubes were left in service.

Six tubes were found with indications at retainer bar intersections. The retainer bars are part of the support structure for the anti-vibration bars and are a unique feature of steam generators manufactured by Mitsubishi. The measured indication depths ranged from 28 to 90 percent of the tube wall thickness. Because of the short measured lengths of these flaws, only the 90 percent indication was in-situ pressure tested as part of condition monitoring. The affected tube was successfully pressurized to 5300 psi with no leakage, confirming that the Technical Specification ~~5.5.2.11.b.1 structural~~6.6.9.b tube integrity performance criteria were met. Mitsubishi attributed the cause of these indications to retainer bar vibration, the potential for which had not been evaluated during design (see Section 4 ~~of this report for additional details).~~ for additional details). Fort Calhoun is the only other domestic plant with Mitsubishi steam generators. The retainer bars at Fort Calhoun are significantly stiffer than at SONGS.

The six tubes with retainer bar indications have been plugged and stabilized. In addition, the remaining 182 tubes (total for both Unit 2 steam generators) that intersect the retainer bars were plugged as a preventive measure. Twenty four of these tubes were stabilized prior to plugging to ensure that all 188 plugged tubes will not sever due to continued vibration of the retainer bar. The tubes that were stabilized are strategically located at each end and center of the retainer bars.

Detailed plans for returning Unit 2 to service are still under development. Short-term plans relating to Unit 2 included conducting a full u-bend examination of 1375 tubes in both steam generators using a rotating coil. The tube sample was intended to ~~bound~~totally box-in the region affected by free-span wear seen in Unit 3 by significant margin. The rotating coil provides a slightly more sensitive inspection for long free-span wear scars than the bobbin probe. These inspections were performed subsequent to the team's site visit and identified two tubes in Unit 2 steam generator 2E0-89 with shallow free-span wear in the u-bend region. These indications both measured approximately 14 percent deep, and were located in the same region of the bundle affected by free-span indications in the Unit 3 steam generators.

The tube wear data for Unit 2 is shown below.

**SONGS Unit 2 Steam Generators**

**Wear Depths Summary**

| Steam Generator SG2E88 (Through- Wall Wear) | Anti-Vibration Bar | Tube Support Plate | U-Bend Freespan | Retainer Bar | Foreign Object | Total Indications | Tubes with Indications |
|---|---|---|---|---|---|---|---|
| ≥ 50% | 0 | 0 | 0 | 1 | 0 | 1 | 1 |
| 35 - 49% | 2 | 0 | 0 | 1 | 0 | 3 | 3 |
| 20 - 34% | 86 | 0 | 0 | 0 | 2 | 86 | 74 |
| 10 - 19% | 705 | 108 | 0 | 0 | 0 | 813 | 406 |
| TW < 10% | 964 | 117 | 0 | 0 | 0 | 1081 | 600 |
| TOTAL | 1757 | 225 | 0 | 2 | 2 | 1984 | 734* |

| Steam Generator SG2E89 (Through- Wall Wear) | Anti-Vibration Bar | Tube Support Plate | U-Bend Freespan | Retainer Bar | Foreign Object | Total Indications | Tubes with Indications |
|---|---|---|---|---|---|---|---|
| ≥ 50% | 0 | 0 | 0 | 1 | 0 | 1 | 1 |
| 35 - 49% | 0 | 0 | 0 | 1 | 0 | 1 | 1 |
| 20 - 34% | 78 | 1 | 0 | 3 | 0 | 82 | 67 |
| 10 - 19% | 1014 | 85 | 2 | 0 | 0 | 1101 | 496 |
| TW < 10% | 1499 | 53 | 0 | 0 | 0 | 1552 | 768 |
| TOTAL | 2591 | 139 | 2 | 5 | 0 | 2737 | 861* |

~~*This value is the number of tubes with wear indications of any depth and at any location. Since many tubes have indications in more than one depth and location, the total number of tubes is less than the total number of indications.~~

*This value is the number of tubes with wear indications of any depth and at any location. Since many tubes have indications in more than one depth and location, the total number of tubes is less than the total number of indications.

1.5 Description of Steam Generator Inspections at SONGS Unit 3

After shutdown, the licensee started preparations for performing inspections of Unit 3 steam generators 3E0-89 and 3E0-88. The steam generator tube inspections commenced on February 12, 2012, and confirmed the location of the leak in steam generator 3E0-88 as coming from the tube in Row 106 Column 78. The leak was located 2 inches beyond anti-vibration support number 4 on the hot leg side. It was found to be associated with a long (approximately 30 inches) free-span flaw indication. No other tubes were found to be leaking.

The licensee then performed eddy current inspections of 100 percent of the tubes, full length, in both Unit 3 steam generators with a bobbin probe. The bobbin probe examinations were supplemented by rotating coil examinations to confirm, characterize, and size the indications found by the bobbin probe. These examinations identified over 160 tubes in each steam generator with long free-span indications similar to that found on the leaking tube. In each steam generator, the tubes containing the free-span indications were grouped together in a tightly packed zone near the center of the tube bundle. The free-span indications were located on the upper and/or lower sides (i.e., the extrados and intrados) of the u-bend. Thus, a given free-span indication on the extrados of one tube tended to be matched by a similar indication on the intrados of the adjacent higher row tube located in the same tube column. This pattern provided early evidence to SCE personnel that the free-span indications were wear flaws due to tube-to-tube contact from motion of the u-bends within the plane of the u-bends. More than half of the free-span indications in each steam generator had maximum measured depths exceeding the 35 percent plugging limit in the technical specifications, and ranged to as much as 99 percent (for the non-leaking tubes).

Over 460 tubes in each steam generator were found with wear indications at the tube support plates. In general, tubes exhibiting the free-span wear indications tended to exhibit tube support plate indications with the highest depth measurements, typically with the deepest values at the seventh tube support plate and trending down at successively lower support levels. Approximately 170 tubes in each steam generator exhibited indications at the tube support plates that exceeded the 35 percent plugging limit, with maximum depths ranging to 70 percent.

Approximately 800 tubes in steam generator 3E0-88 and 900 tubes in steam generator 3E0-89 exhibited wear indications at the anti-vibration bar supports. Most of these measured less than 20 percent deep, and only 2 indications exceeded the 35 percent plugging limit. For tube indications at anti-vibration bars in tubes not exhibiting free-span u-bend indications, the length of the wear indications was confined to within the width of the anti-vibration bars. This was also true in SONGS Unit 2. For tubes that exhibited free-span indications, many of these tubes had wear indications at the anti-vibration bars that extended outside the width of the anti-vibration bars which indicated in-plane movement of these tubes in the u-bend area.

Four tubes were found with indications at retainer bar intersections, with measured depths ranging from 28 to 46 percent. At the time of the team's presence at the site, planned corrective actions with respect to tubes adjacent to the retainer bar were similar to those completed for Unit 2. The four tubes with retainer bar indications were plugged and stabilized. In addition, the remaining 184 tubes (total for both Unit 3 steam generators) that intersect the retainer bars were plugged as a preventive measure. Twenty four of these tubes were stabilized prior. The tubes that were stabilized are strategically located at each end and center of the retainer bars.

Tube wear data for Unit 3 is shown below.

**SONGS Unit 3 Steam Generators**
**Wear Depths Summary**

| Steam Generator SG3E88 (Through- Wall Wear) | Anti-Vibration Bar | Tube Support Plate | Tube-to-Tube Wear | Retainer Bar | Foreign Object | Total Indications | Tubes with Indications |
|---|---|---|---|---|---|---|---|
| ≥ 50% | 0 | 117 | 48 | 0 | 0 | 165 | 74 |
| 35 - 49% | 3 | 217 | 116 | 2 | 0 | 338 | 119 |
| 20 - 34% | 156 | 506 | 134 | 1 | 0 | 797 | 197 |
| 10 - 19% | 1380 | 542 | 98 | 0 | 0 | 2020 | 554 |
| TW < 10% | 1818 | 55 | 11 | 0 | 0 | 1884 | 817 |
| TOTAL | 3357 | 1437 | 407 | 3 | 0 | 5204 | 919* |

| Steam Generator SG3E89 (Through- Wall Wear) | Anti-Vibration Bar | Tube Support Plate | Tube-to-Tube Wear | Retainer Bar | Foreign Object | Total Indications | Tubes with Indications |
|---|---|---|---|---|---|---|---|
| ≥ 50% | 0 | 91 | 26 | 0 | 0 | 117 | 60 |
| 35 - 49% | 0 | 252 | 102 | 1 | 0 | 355 | 128 |
| 20 - 34% | 45 | 487 | 215 | 0 | 0 | 747 | 175 |
| 10 - 19% | 940 | 590 | 72 | 0 | 0 | 1602 | 450 |
| TW < 10% | 2164 | 94 | 1 | 0 | 0 | 2259 | 838 |
| TOTAL | 3149 | 1514 | 416 | 1 | 0 | **5080** | **887*** |

~~*This value is the number of tubes with wear indications of any depth and at any location. Since many tubes have indications in more than one depth and location, the total number of tubes is less than the total number of indications.~~
Detailed plans for satisfying the provisions of the NRC March 27, 2012, Confirmatory Action Letter for SONGS Unit 3 were not available and were still being developed.

1.6 In-Situ Pressure Testing

Technical Specification 5.5.~~2.11~~9.a for SONGS Units 2 and 3 requires that a condition monitoring assessment be performed during each outage that the steam generator tubes are inspected or plugged to confirm that the tube integrity performance criteria are being met. These performance criteria include ~~specific requirements~~standard criteria for ~~tube~~ structural integrity and accident ~~induced~~ leakage integrity. The limiting structural criterion applicable to the SONGS Units 2 and 3 is the normal steady state pressure differential across the tubes times a safety factor of three. The limiting accident ~~induced~~ leakage criterion is 0.5 ~~gpm~~gallons per minute under main steam ~~generator~~line break conditions.

Typically, the requirement for performing condition monitoring is satisfied by analyzing eddy current flaw indications relative to screening criteria that are functions of measured flaw depth, length, and/or eddy current voltage response. These screening criteria are conservative relative to the performance criteria since they make allowance for eddy current measurement error, uncertainties with respect to voltage correlations with flaw depth and burst strength, and material property variability. When these screening criteria are exceeded, in-situ pressure tests may be performed for tubes not meeting the screening criteria to confirm that the performance criteria are met for these tubes. In-situ pressure test procedures at SONGS and the screening criteria for selecting tubes to be tested were in accordance with Electrical Power Research Institute Report 1014983, "Steam Generator In-Situ Pressure Test Guidelines," Revision 3.

At Unit 2, one tube with a measured 90 percent deep indication at a retainer bar location was determined to be outside the screening criteria and was in-situ pressure tested. For Unit 3, an optional strategy to the screening criteria approach was taken in accordance with the Steam Generator In-Situ Pressure Test Guidelines, Appendix A. The Appendix A approach is a statistically based Monte Carlo approach that samples the uncertainty distributions associated with each of the input parameters for calculating

tube burst pressure. This methodology selects all tubes determined to have a 0.95 probability or less of meeting the limiting structural integrity performance criterion. Application of this methodology led to selection of 129 tubes on Unit 3 for in-situ pressure testing, 73 tubes in steam generator 3E0-88 and 56 tubes in steam generator 3E0-89.

The in-situ pressure tests were performed under ambient conditions. Therefore the test pressures were adjusted upward from actual values under hot conditions to account for the increased yield and ultimate strength of the tube material under ambient conditions. The test pressures (with correction factors added) corresponding to normal operating conditions, main steam line break, and three times normal operating pressure differential were 1850 psi, 3200 psi, and 5300 psi, respectively.

The test procedure involved pressurizing the subject tube at a rate not to exceed 200 psi/sec to each test point. At each test point, pressure was held constant for two minutes if the tube was not leaking. If the tube was leaking, pressure was held constant for five minutes before ramping to the next test pressure.

The tube with a 90 percent deep retainer bar indication in Unit 2 was successfully tested to 5300 psi with no leakage. This demonstrated that all performance criteria were met for this tube. For Unit 3, 136 of the 144 tubes were successfully tested to 5300 psi with no leakage, demonstrating that these tubes met the performance criteria. The remaining eight tubes "failed" prior to reaching 5300 psi. Failure in this context means that leakage occurred in excess of the 4.5 gallons per minute pump capacity during the test, and test pressure could not be maintained. All eight tubes that failed were in steam generator 3E0-88. All tubes tested in steam generator 3E0-89 passed with no leakage.

Table 1 summarizes the in-situ pressure test results for the eight tubes that failed the test. Three of the eight tubes failed at or below the test pressure corresponding to main steam line break differential pressure. The tube that leaked causing shutdown of SONGS Unit 3 (row 106, column 78) exhibited the lowest failure pressure, 2874 psi. The three tubes that failed at or below main steam line break pressure failed to meet the accident leakage performance criteria as well as the structural integrity performance criteria. The other five tubes met the accident leakage criteria, but failed to meet the structural criteria.

Prior to being tested to failure, the tube that leaked during operation (row 106, column 78) exhibited a measured leak rate of 0.072 gallons per minute at a test pressure corresponding to normal operating conditions. This compares with a leak rate of 0.06 gallons per minute measured by SCE operating staff for SONGS Unit 3 when they made the decision to shut the plant down. The reported operational leakage was evaluated based on ambient conditions. Both the operational and test measurements are less than the applicable technical specification limit of 0.1 gallons per minute.

Table 1 – SONGS 3 In-Situ Pressure Test Results

| SG | Row | Column | Leak Rate at Normal Operating Conditions (gpm) | Leak Rate at Main Steam Line Break (gpm) | Failure Pressure (psi) |
|---|---|---|---|---|---|
| 88 | 106 | 78 | 0.072 | >0.5 | 2874 |
| 88 | 102 | 78 | 0 | >0.5 | 3268 |
| 88 | 104 | 78 | 0 | >0.5 | 3180 |
| 88 | 100 | 80 | 0 | >0.5 | 4732 |
| 88 | 107 | ~~77~~87 | 0 | >0.5 | 5160 |
| 88 | 101 | 81 | 0 | >0.5 | 4889 |
| 88 | 98 | 80 | 0 | >0.5 | 4886 |
| 88 | 99 | 81 | 0 | >0.5 | 5026 |

2.0 Probable Cause Evaluation (Charter Item 2)

While the team was on-site, both SCE and Mitsubishi were in the process of conducting cause evaluations for the tube ~~failures~~failure and unexpected wear of steam generator tubes in Unit 3. As part of both evaluations, actions were being taken to understand the differences between Unit 2 and 3 steam generators. The cause evaluations were not complete and were undergoing changes while the Augmented Inspection Team was onsite; however, SCE did subsequently complete their cause evaluation prior to the team's exit meeting. The team did a detailed review of the completed cause evaluation.

2.1 ~~SCE~~SONGS Cause Evaluation

a. Inspection Scope

The team conducted an overall and independent review of SCE's actions taken to understand the probable cause for the steam generator tube degradation. The team reviewed the updated final safety analysis report, technical specifications, design basis documents, original steam generator design, replacement steam generator design, purchase order specifications, design changes, manufacturing changes, nonconformance reports, supplier deviation reports, and interviewed personnel. The review included understanding the licensee's criteria for determining the cause, or if one could not be determined, the most probable cause.

b. Observations and Findings

No findings were identified.

The team participated in discussions with the licensee's cause analysis team and noted that the licensee employed various root cause evaluation techniques. These included a change analysis technique that compared design differences and a problem analysis technique relying on a systematic process that looked at the causal effects and risk assessments of possible causes. The team reviewed the licensee causal analysis summary that assigned a ranking of highly probable to unlikely.

In the area of thermal hydraulic analysis the licensee contracted AREVA to verify the accuracy of Mitsubishi's thermal-hydraulic code (FIT III) used during the design of the replacement steam generators, by comparing it to ATHOS, a thermal-hydraulic code developed by the Electric Power Research Institute (EPRI). In addition, SCE contracted Westinghouse to perform a completely independent analysis using a Westinghouse modified ATHOS thermal-hydraulic code. AREVA also performed independent flow induced vibration analyses. The licensee brought on board MPR associates and numerous other technical experts, including a world renowned expert in flow induced vibration, to assist in the cause assessment. The team observed that SCE preliminary causal analysis was generally consistent with that of Mitsubishi. Initially, the licensee reviewed the following cause contributors:

- Departure from original steam generator u-bend/anti-vibration bar configuration - highly probable
- Departure from original steam generator stay cylinder configuration - possible
- Departure from original steam generator tube support plate configuration - possible
- Replacement steam generator anti-vibration bar structure too flexible - possible
- Additional 300 rotations of Unit 3 replacement steam generator due to divider plate repair work - possible
- Thermal-hydraulic and flow induced vibration models used in replacement steam generator design incorrectly predicted replacement steam generator tube bundle behavior – possible

The team observed that the licensee performed a detailed analysis and attempted to address all probable causes. The team observed that some of the conditions which were eliminated as potential contributors may need further evaluation. In particular, the team ~~determined~~believed that the only major difference between Units 2 and 3 was the divider plate repair to both Unit 3 steam generators. This difference had been discounted by both SCE and Mitsubishi. The divider plate is further discussed in Section 12.0 of this report.

~~c. Conclusions~~

The completed SCE cause evaluation identified the mechanistic cause of the tube-to-tube wear as fluid-elastic instability caused by a combination of localized high steam/water velocity, high steam void fraction, and insufficient contact forces between the anti-vibration bars and the tubes. The Mitsubishi thermal/hydraulic model under-predicted the actual thermal/hydraulic conditions in the steam generator and improvements in fabrication between Unit 2 and Unit 3 steam generators led to the

reduced contact forces.

2.2 Mitsubishi Cause Evaluation

a. Inspection Scope

The team conducted an overall and independent review of Mitsubishi's actions taken to understand the probable cause of the steam generator tube degradation. While onsite, the inspection team was informed that Mitsubishi was performing a failure analysis to characterize the mechanism causing the tube-to-tube wear condition in Unit 3. The team had periodic discussions with Mitsubishi personnel to gather information on the probable causes under consideration. The team reviewed information contained in the updated final safety analysis report, technical specifications, design basis documents, purchase order specifications, design changes, design drawings, manufacturing changes, nonconformance reports, and supplier deviation reports to understand the design and fabrication of the replacement steam generators and independently assess the information obtained from Mitsubishi's in-progress cause evaluation.

b. Observations and Findings

No findings were identified.

The team determined that Mitsubishi was performing a thorough evaluation of the failure mechanism leading to the tube-to-tube wear in Unit 3. The team noted that Mitsubishi gathered factual information about the design, fabrication, and operation of the replacement steam generators in Unit 2 and Unit 3 to understand the differences between these components and identify potential contributing causes. The team discussed the preliminary failure mechanism theory with Mitsubishi personnel, who attributed the tube-to-tube; wear to a combination of design, fabrication, and operational factors.

Mitsubishi's preliminary explanation of the failure mechanism started with the combination of two factors: (1) a relatively small tube pitch to tube diameter ratio (P/D), and (2) high void fraction in the tube bundle area where the tube-to-tube wear was identified. The small pitch to diameter ratio was a fixed parameter in the replacement steam generators established by the nominal center-to-center distance between adjacent tubes (P) and the nominal outside diameter of the tubes (D). The high void fraction was identified from the results of Mitsubishi's thermal-hydraulic model for the secondary side of the replacement steam generators. Mitsubishi considered that the combination of these two factors may have resulted in favorable conditions for in-plane tube vibration based, in part, on the results of recent studies in fluid-elastic instability.

Additionally, Mitsubishi identified that the Unit 3 replacement steam generators had better dimensional controls during the fabrication process. This determination was based, in part, on the results of pre-service and in-service eddy current examinations, and fabrication data from Unit 2 and Unit 3 replacement steam generators. The correlation of dimensional controls with the failure mechanism was that improved dimensional controls for Unit 3 replacement steam generators resulted in less variability

of as-built critical dimensions such as anti-vibration bar thickness, tube roundness, and gaps between tubes and anti-vibration bars. Condition Report 201836127, Cause Evaluation, Revision 0, lists one of the mechanistic causes of the tube-to-tube wear to be associated with the reduction in dimensional variability that resulted in less contact force between the tubes and the anti-vibration bars.

The failure mechanism model also considered a fluid dynamic effect associated with the spreading of the tubes in the U-bend region during normal operating conditions. This effect was informally referred to as "flowering," due to the characteristic shape in which the tube bundle spreads transverse to the plane of the u-bends at normal operating conditions. "Flowering" was described as the elastic deformation of the anti-vibration bar structure and the tube bundle in the U-bend region, as a result of thermal expansion and fluid dynamic pressure acting on the secondary side of the tubes (see figure below). The deformation caused by the "flowering" effect was believed to result in multiple areas of no contact between the anti-vibration bars and the tubes, which minimized resistance to in-plane motion of the u-bend area of the tubes.

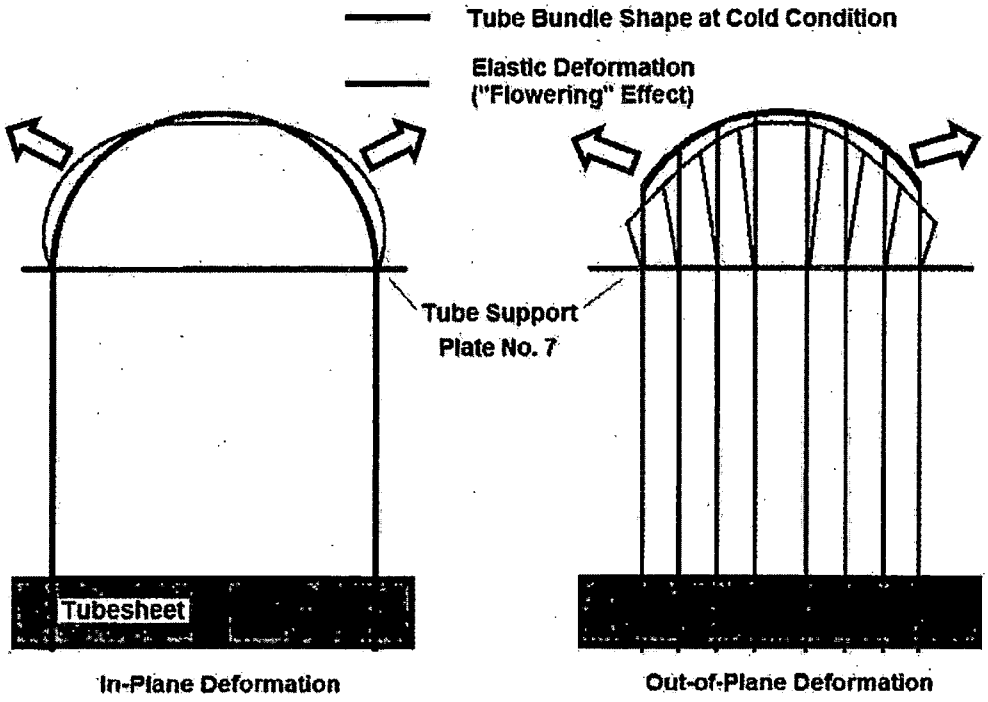


Description of "Flowering" Effect (Conceptual Drawing – For Illustration Purposes Only)

Mitsubishi considered that the collective contribution of the factors described above resulted in conditions in the U-bend that were highly susceptible to excessive tube vibration. The in-plane vibration of the tubes in the U-bend region allowed direct contact between free-span sections of the tubes, resulting in the unanticipated tube-to-tube wear.

At the conclusion of the onsite portion of this inspection, Mitsubishi was further evaluating the failure mechanism by conducting in-depth analyses of available data to

validate their failure mechanism theory. One of the analyses included analytical studies of the impact of anti-vibration bar gap size, free-span length, fluid-elastic vibration, and contact forces on tube wear depth. An expected outcome of this analysis was that contact forces and the number of inactive supports should be the biggest contributors to wear under fluid-elastic instability conditions. Additionally, Mitsubishi was conducting further analytical studies of the "flowering" effect by modeling multiple cases of elastic displacement of the tube bundle structure, taking into consideration thermal expansion and dynamic pressures. Concurrent with these analyses, Mitsubishi was studying the effect of manufacturing dispersion on tube wear. Specifically, Mitsubishi was modeling multiple cases of manufacturing variability to study the influence of different dimensional controls on gap and contact forces. Mitsubishi was using as-built data as well as manufacturing tolerances to statistically assess the impact of dimensional controls on the resulting gaps and contact forces in different areas of the tube bundle. ~~Based on the data reviewed by the team, the standard deviation of the tube ovality (G-value) decreased during each successive fabrication run of the steam generator tubes (order of tube fabrication -> U2E0-89, U2E0-88, U3E0-89, and U3E0-88).~~ One of the expected outcomes of this analysis was that manufacturing variability in Unit 3, in combination with the "flowering" effect, would result in a reduction of contact forces in Unit 3 relative to those in Unit 2. During the on-site portion of this inspection, the results of these studies were not finalized and additional failure analysis tasks were scheduled to accurately characterize the failure mechanism and support the cause determination.

~~c. Conclusions~~

At the time of the exit, Mitsubishi was still completing their independent cause analysis. ~~The team was unable to evaluate this aspect; however~~As part of the Confirmatory Action Letter inspection, the final Mitsubishi cause evaluation will be reviewed ~~as part of the Confirmatory Action Letter inspection. No conclusions were reached with regard to the Mitsubishi cause evaluation at this time.~~

3.0 Operational Differences in Configuration and Operation between Unit 2 and 3 (Charter item 3)

a. Inspection Scope

The team reviewed Unit 2 and 3 Cycle 16 operational data records found in operator logs and the plant computer system. The team focused on differences in configuration and operation between Units 2 and 3. The team evaluated full power operational data between Unit 2 and Unit 3 steam generators after each were replaced. From this data the team compared key plant parameters and other indications such as temperature, flow, power, pressure, and vibration and loose parts monitoring alarms. The team reviewed operational differences between Units 2 and 3 in order to gain information and to assess if these differences could have had an impact on the observed differences in the steam generator tube wear between the units.

b. Observations and Findings

~~The team~~ No findings were identified ~~one unresolved item for which additional information is required to determine if~~.

The team looked at a ~~performance deficiency exists or if the issue constitutes a violation of NRC requirements. The team also modeled the impact~~ number of operational differences ~~on~~from the ~~predicted~~perspective of the thermal-hydraulic disparities. The team also evaluated the significance of these differences insofar as potential impact to tube degradation. It was noted that Unit 3 ran with slightly higher primary temperatures, about 4°F higher than Unit 2. Other differences were noted in steam and feedwater flow but none~~response~~ of the differences were considered sufficient to significantly affect thermal hydraulic characteristics inside the steam generators.— In addition, the team also identified that Unit 3 steam generators had numerous valid vibration and loose parts monitoring system alarms compared to Unit 2 steam generators.

Form
Left

(1) Introduction: The team identified an unresolved item associated with the number of valid vibration and loose parts alarms observed in Unit 3 steam generators compared to Unit 2 steam generators, during steady state conditions.

Description: During the review of operational differences between Unit 2 and 3 steam generators the team identified a significant difference in number of valid vibration and loose parts monitoring system alarms. The vibration and loose parts monitoring system was designed to provide continuous monitoring and conditioning of loose parts accelerometer signals. Two separate accelerometers were installed on each of the steam generators. The location of these instruments are on the steam generators' lower supporting structures and provide acoustic information about loose parts impacts specifically on the reactor coolant or primary side of the steam generators. The vibration and loose parts monitoring system real time functions consist mainly of impact alarm validation of suspected loose part events and recording acoustic data. Long term vibration monitoring and loose part event trending were done by engineering personnel using recorded data.

Unit 3 returned to service in February 2011, and the resident inspectors noted a number of nuclear notifications associated with Unit 3 steam generators vibration and loose parts monitoring alarms. On January 20, 2012, prior to the Unit 3 tube leak, engineering personnel also identified this trend and documented in Nuclear Notification NN 201818719 this problem and assigned an action to do further evaluation. On February 3, 2012, engineering personnel sent two sets of alarm signatures to Westinghouse, which contained impact data on alarms for time periods of steady state operation (i.e., no major temperature changes). Westinghouse engineering personnel concluded that the acoustic signals picked up by the accelerometers were valid and similar in nature to acoustic signatures caused by thermal movement of a steam generator expected during changes in thermal conditions, such as plant startup or shutdown. However the data obtained and analyzed had been taken during steady state operations. The team noted that Unit 2 steam generators did not receive the same number and type of alarms during a similar period of steady state operations. Engineering personnel also compared hot leg temperature changes linked to Unit 3 operations from February 18, 2011, to January 31, 2012, and confirmed about 30 valid alarms during this period were not associated with thermal transients.

Additional review and follow up will be required of the vibration and loose parts monitoring system alarms, including evaluation and disposition of Unit 3 alarms and then determine whether this issue represents a performance deficiency or constitutes a violation of NRC requirements. This issue is identified as URI 05000362/2012007-02, "Evaluation of Unit 3 Vibration and Loose Parts Monitoring System Alarms."

(2) ~~Operational Differences~~Introduction: The team performed a number of different thermal-hydraulic analysis of Units 2 and 3 steam generators. The output of the various analyses runs where then compared and reviewed to determine if those differences could have contributed to the significant change in steam generator tube wear. ~~It was noted that Unit 3 ran with slightly higher primary temperatures, about 4°F higher than Unit 2. Other differences were noted in steam and feedwater flow but none of the differences were considered sufficient to significantly affect thermal hydraulic characteristics inside the steam generators. The different analyses included:~~

Description: The NRC conducted a number of different thermal-hydraulic analyses, including:

- Lower bounding thermal hydraulic analysis using the steam generator base design condition, where primary inlet temperature was 598°F, and an upper bound case where primary inlet temperature was 611°F as identified in Mitsubishi Document L5-04GA021, Revision 3
- Varying steam generator pressures from 833 to 942 psia
- Steam mass flow rates from 7.59 to 7.62 Mlbm/hr
- Primary loop volumetric flow rate from 102,000 to 104,000 gpm, and
- Recirculation ratio from 3.2 to 3.5.

~~c. Conclusions~~

~~The team identified one unresolved item associated with SCE's evaluation of the Unit 3 loose parts monitoring alarms.~~

The result of the independent NRC thermal-hydraulic analysis ~~indicated~~concluded that differences in the actual operation between units and/or individual steam generators had an insignificant impact on the results and in fact, the team did not identify any changes in steam velocities or void fractions that could attribute to the differences in tube wear between the units or steam generators. It should be noted that increases in primary temperature and steam generator pressures has the effect of reducing void fractions and peak steam velocities, which slightly decreases the conditions necessary for fluid elastic instability and fluid-induced vibration.

4.0 Design and Manufacturing Differences (Charter Item #4) (Mitsubishi Charter Item 1)

During the development of the charter, it was not known how SCE and Mitsubishi reviewed and approved design and manufacturing changes. During the inspection, it was identified that all design and manufacturing changes proposed by Mitsubishi

required review and approval from a SCE representative. Based on this, it was determined that this area could be covered as one item.

a. Inspection Scope

The team interviewed licensee and Mitsubishi personnel involved in the design and fabrication of the replacement steam generators and reviewed information including nonconformance reports, design drawings, fabrication procedures, design changes, engineering evaluations, supplier deviation requests, and design specifications to identify conditions affecting quality that resulted in relevant design differences between the replacement steam generators. The team assessed whether these differences could be considered as contributing factors for the cause of the tube-to-tube wear issue in Unit 3. The team also reviewed Engineering Change Packages 800071702 and 800071703 for the Unit 2 and Unit 3 replacement steam generators, respectively, with emphasis on changes made to the design methodology described in the updated final safety analysis report for the original steam generators to verify that the evaluation was performed in accordance with licensee procedures and the provisions of 10CFR 50.59, "Changes, Tests, and Experiments."

b. Observations and Findings

No findings were identified.

The team identified two unresolved items for which additional information is required to determine if performance deficiencies exist or if the issues constitute violations of NRC requirements. The team also identified several observations related to the design, fabrication, and the engineering change package for the Unit 2 and Unit 3 replacement steam generators.

~~(1)~~1) Introduction: The team identified an unresolved item associated with the design of the retainer bars in Unit 2 and Unit 3 replacement steam generators.

Description: In February 2012, the licensee identified wear indications in Unit 2 replacement steam generators at the tube locations in contact with the retainer bars (see figure below). Some of the indications showed excessive wear with a maximum degradation of 90 percent through wall.

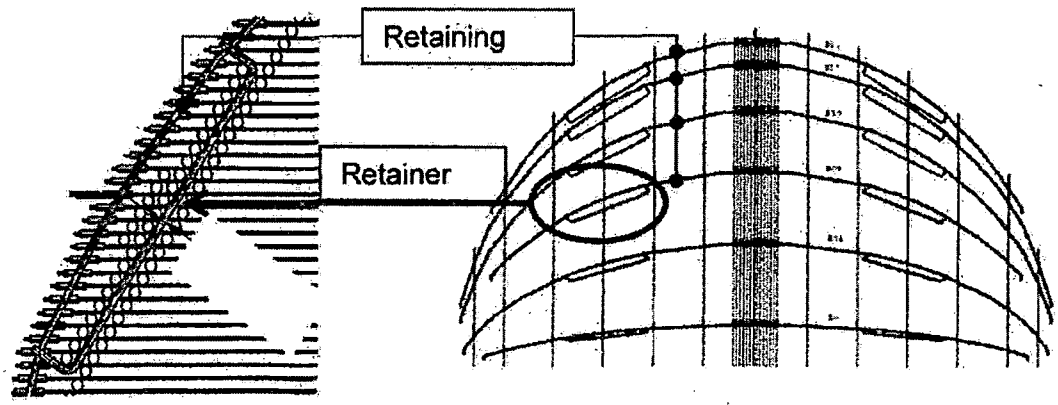

Retainer Bar Design and Location of Affected Tubes (For Illustration Purposes Only) Form

The team identified that the design of the replacement steam generators did not expect any potential vibration concerns in the area of the tube bundle where the retainer bars were located. The basis for Mitsubishi's design philosophy relied on the following factors:

- Based on the calculated natural frequency of the retainer bar, Mitsubishi considered that there would not be a resonant vibration condition relative to the flow conditions in the location of retainer bars.
- The vibration analysis of the tube bundle only considered out-of-plane vibration because in-plane vibration was not expected to be an operational concern for the retainer bars.
- The outermost tubes were considered the least susceptible to flow-elastic instability; therefore retainer bar locations were not included in the vibration analysis.
- Fluid-elastic instability was found not applicable to the retainer bar because this mechanism did not apply to a single tube in cross flow.
- Vortex-induced vibration was found not applicable to the retainer bar because it was considered a vibration mode applicable to a single cylinder in uniform cross flow in a large area and the flow condition around the retainer bars was considered slug-froth two phase flow.

However, upon identification of retainer bar-to-tube wear in Unit 2 replacement steam generators, Mitsubishi performed an evaluation to identify the cause of excessive wear. The analysis considered three vibration mechanisms: fluid-elastic instability, vortex-induced vibration, and turbulence-induced vibration (random vibration). The analysis for turbulence-induced vibration determined that random vibration was the possible cause of the retainer vibration, based on the peculiar flow around the retainer bar, combined with the rather low natural frequency of the retainer bar. The analysis used the two phase flow conditions around the retainer bars and identified various modes of vibration at those flow conditions that could lead to retainer bar vibration and consequently to tube wear.

Additional review by the NRC is required following completion of the ~~Mitsubishi's~~licensee's cause evaluation to determine whether this issue represents a performance deficiency or constitutes a violation of NRC requirements. This issue is identified as URI 05000362/2012007-03, "Evaluation of Retainer Bars Vibration during the Original Design of the Replacement Steam Generators."

~~(2)~~2) Introduction: The team identified an unresolved item associated with the dimensional controls of critical dimensions throughout the fabrication of Unit 2 and Unit 3 replacement steam generators. Form

Description: Based on the information gathered by the team on the differences in dimensional controls of critical parameters in Unit 2 and Unit 3 replacement steam

generators, the team determined that Mitsubishi did not consider the potential impact of improving dimensional controls for tube roundness and anti-vibration bars on the final tube bundle clearances at normal operating conditions.

Additional review by the NRC is required following completion of ~~Mitsubishi's~~the licensee's cause evaluation to fully assess how the dimensional controls contributed to the tube-to-tube wear in Unit 3 and then determine whether this issue represents a performance deficiency or constitutes a violation of NRC requirements. This issue is identified as URI 05000362/2012007-04, "Evaluation of Changes in Dimensional Controls during the Fabrication of Unit 2 and Unit 3 Replacement Steam Generators."

~~(3)~~3) Design Differences: The team did not identify any significant differences in the design requirements of Unit 2 and Unit 3 replacement steam generators. The "Conformed Specification for Design and Fabrication of the Replacement Steam Generators," also known as the design specification, contained identical technical requirements for Unit 2 and Unit 3 steam generators. All replacement steam generators were required to be designed, fabricated, and tested in accordance with the ~~1998~~20?? edition of the American Society of Mechanical Engineers (ASME) Boiler and Pressure Vessel Code~~, with the 2000 Addenda~~, industry standards, and NRC endorsed methods described in applicable regulatory guides. The licensee specified the same licensing requirements for all replacement steam generators.

The design specification also contained provisions to address technical or quality deviations from the requirements of the purchase order or the design specifications, including the disposition of "Repair" or "Accept as-is" conditions captured as non-conformance reports in Mitsubishi's quality assurance program and changes to documents previously approved by the licensee. This process was referred to as "Supplier Deviation Request" and allowed the licensee to review and approve deviations from the approved design specifications. The team noted that changes affecting the specified design were submitted to SCE personnel for review and approval.

The team noted that the design specification established identical provisions for the design of the replacement steam generator components including the vessel, upper/lower shell, transition cone, tubesheet, channel head, divider plate, tube supports, tubing, steam nozzle, feedwater nozzle, primary nozzles, steam flow limiting device, moisture separators/dryers, feedwater distribution system, blowdown and sludge management, access/inspection ports, instrument/sampling taps, and loose part monitoring.

The design specification also established identical requirements for the service life and service environmental conditions of the replacement steam generators. The licensee also specified identical design loading, structural, and seismic requirements for all replacement steam generators. The design specification contained identical requirements for design transients under normal, upset, emergency, faulted, and test conditions.

Additionally, the performance requirements in the design specification were identical for each replacement steam generator, which included:

- Water Level Stability
- Circulation Ratio
- Moisture Carryover
- Steam Carryunder in the Downcomer Annulus
- Reactor Coolant Flow Rate
- Primary-To-Secondary Leakage
- Blowdown Capacity
- Thermal Rating
- Heat Transfer Surface Area
- Tube Plugging Margin
- Fouling Factor
- Overall Heat Transfer Coefficient
- Primary Side Design and Operating Pressure/Temperatures
- Secondary Side Design and Operating Pressures/Temperatures
- Primary Side Design and Operating Flows
- Secondary Side Design and Operating Flows
- Tube Material and Dimensions

The replacement steam generator design developed by Mitsubishi for SONGS Unit 2 and Unit 3 in accordance with the licensee's design specification was translated into the same set of design and fabrication drawings. The team noted that some as-built dimensions varied between Unit 2 and Unit 3 steam generators as a result of the divider plate weld repairs in Unit 3 and other manufacturing processes. However, these dimensional changes did not represent significant deviations from the original design specifications. Therefore, the team determined that no significant differences existed in the design requirements of Unit 2 and Unit 3 replacement steam generators.

~~(4)~~4) Fabrication Differences: The team noted that the design specification contained the same general fabrication requirements for the Unit 2 and Unit 3 replacement steam generators. The design specification contained the methods required for fabrication, assembly, inspection, and testing of the replacement steam generators. The specification covered, in part, fabrication requirements for the channel head cladding, tube dimensions, tube wall thickness, tube bend radius, tube "ovality," tubesheet, tube-to-tubesheet joints, tube supports, tube bundle, machined gasketed surfaces, non-ASME steam generator internals, welding methods, post-weld heat treatment, and allowable welding materials. The specification also contained detailed requirements for inspections, tests, and examinations, which included examination methods and personnel qualification requirements.

The design specification also required the use of "Supplier Deviation Requests" to address technical or quality deviations from the requirements of the Purchase Order or the design specifications, including the disposition of "Repair" or "Accept as-is" conditions identified during the fabrication process and changes to fabrication documents previously approved by the licensee. The team noted that fabrication

issues affecting the specified design were submitted to SCE personnel for review and approval.

Based on discussions with SCE and Mitsubishi personnel and the review of documentation about the fabrication history of Unit 2 and Unit 3 replacement steam generators, the team identified the differences listed below. At the conclusion of the onsite portion of this inspection, the differences between Unit 2 and Unit 3 steam generators as a result of the fabrication process were under consideration for the cause evaluation.

- Steam Dryer Assembly – During the fabrication of Unit 2 steam generator 2E0-89, Mitsubishi identified a nonconforming condition of the steam dryer assembly that included damaged locking plates of vane jacking devices, displaced bolts, and damaged vanes. The cause of this issue was determined to be inadequate evaluation and control of the design ~~within~~ regard ~~to~~ the capacity of the vane jacking devices to sustain all fabrication conditions. Specifically, the vane jacking devices failed to stay in the design position during multiple rotations of the steam generator assembly during fabrication. Mitsubishi corrected the condition, in part, by replacing all vane jacking devices and damaged vanes with a new design, which was also used in the fabrication of the Unit 2 steam generator 2E0-88, and Unit 3 steam generators 3E0-89 and 3E0-88. Additionally, Mitsubishi modified the assembly sequence of the steam dryers. For Unit 2 steam generator 2E0-89, the steam dryer vanes were assembled in-situ while the steam dryers for Unit 2 steam generator 2E0-88 and Unit 3 steam generators 3E0-88 and 3E0-89 were preassembled before installation in their final position.

- Drilling of Tubesheet Holes – The tubesheet holes in Unit 2 and Unit 3 steam generators where the tubes are inserted for final assembly were made with different drill bits. The Unit 2 steam generator tubesheets were drilled with uncoated drill bits. The Unit 3 steam generator tubesheets were drilled with titanium-nitride coated drill bits, which improved the drill bit life and resolved tooling mark issues experienced in Unit 2.

- Transition Wrapper Welding – The welding of the transition wrapper was performed in different order for each unit. For Unit 2 steam generators, the transition wrapper was welded after the tubes and anti-vibration bars were installed. In Unit 3 steam generators, the transition wrapper was welded before the installation of tubes and anti-vibration bars.

- Cladding Removal Process for the Channel Head – The removal of the stainless steel clad weld from the interior surface of the channel head base metal in preparation for the divider plate weld (i.e. structural butter weld) was performed with different methods in Unit 2 and Unit 3 replacement steam generators. For Unit 2, Mitsubishi used a machining process to remove the cladding in both steam generators. In Unit 3, Mitsubishi used an air carbon-arc gouging process. This method resulted in separation of the butter weld during hydrostatic testing. The root cause evaluation concluded that the air carbon-arc gouging process left

carbon deposits on the base metal. Gouging was followed by grinding which was designed to remove the heat affected zone and expected to completely remove the carbon deposits. However, the grinding process left carbon deposits behind, which resulted in the localized areas of high carbon and high base metal hardness due to carburization. The repair of the Unit 3 divider plate welds is addressed in further details in Section 12.0 of this report.

- Helium Leak Test – As part of the fabrication process, Mitsubishi performed a Helium-Nitrogen leak test on the secondary side of the replacement steam generators to check for leaks on the tube-to-tubesheet welds. For all steam generators, this test was performed after completion of the tube-to-tubesheet weld, but prior to the penetrant examination of the tube-to-tubesheet welds and final tube expansion. The leak tests for Unit 2 steam generators were performed at a higher pressure than Unit 3 steam generators. Additionally, the Unit 2 tests were performed using a temporary welded cap on top of the steam generator shell to enclose the secondary side, while a temporary clamped cap was used in Unit 3 steam generators. All tests required the same holding time before starting the test and the same leak rate acceptance criteria.

- Preliminary and ASME Section III Hydrostatic Tests – The number of hydrostatic tests performed in accordance with ASME Section III on the primary and secondary sides of the replacement steam generators varied between Units due to the results of the initial test in each steam generator. For each replacement steam generator, the hydrostatic tests were performed first on the primary side and then on the secondary side. Both Unit 2 steam generators met the acceptance criteria in the first hydrostatic test. However, during the first hydrostatic test on the secondary side of Unit 3 steam generator 3E0-89, Mitsubishi identified leakage through a tube-to-tubesheet weld that exceeded the ASME Code acceptance criteria. After repairs were completed to address the leakage, the hydrostatic tests were re-performed. Following the second set of hydrostatic tests on Unit 3 steam generator 3E0-89, cracking indications were identified in the divider plate-to-channel head weld. After repairs were completed to address the divider plate weld cracks, a third set of hydrostatic tests were performed in Unit 3 steam generator 3E0-89. Since similar cracking indications of the divider plate weld were identified in Unit 3 steam generator 3E0-88, a second set of hydrostatic tests was performed in this steam generator after the divider plate weld was repaired.

  Additionally, prior to each ASME Section III hydrostatic test, Mitsubishi performed a preliminary hydrostatic test of the primary and secondary side of the steam generators at design pressure to check for leakage at the feed pump, pressure filling line, temporary gaskets, and temporary seals. Therefore, each replacement steam generator received an equal number of preliminary and ASME Section III Hydrostatic Tests. The total numbers of hydrostatic tests for each steam generator are summarized below.

| **Number of Preliminary and ASME Section III Hydrostatic Tests** |
|---|

| Steam Generator | Primary Side | Secondary Side | Results |
|---|---|---|---|
| 2E0-89 | 1 | 1 | Acceptance criteria met |
| 2E0-88 | 1 | 1 | Acceptance criteria met |
| 3E0-89 | 1 | 1 | Leakage detected in tube-to-tubesheet weld |
| | 1 | 1 | Divider plate weld separation weld identified |
| | 1 | 1 | Final – Acceptance criteria met |
| 3E0-88 | 1 | 1 | Divider plate weld separation weld identified |
| | 1 | 1 | Final – Acceptance criteria met |

- Pre-Service Inspection – The design specification established similar requirements for the pre-service eddy current examination of Unit 2 and Unit 3 replacement steam generators. The team noted that the eddy current examinations of Unit 2 and Unit 3 steam generators were performed with similar eddy current techniques, including essential variables. However, the circumstances in which the examinations were performed varied for each Unit. For Unit 2, the pre-service examination was performed after the steam generators were delivered at the SONGS jobsite. The steam generators were examined on the shipping saddles, where the position of the tube bundle was at 45 degrees from the gravity neutral position. This position was dictated by the location of the steam generator lifting trunnions which were installed on the upper shell at 45 degree orientation from the steam generator centerline. For Unit 3, the pre-service eddy current examination was performed at the Mitsubishi Kobe facility while the steam generators were still on the fabrication rollers and in the gravity neutral position (i.e. divider plate oriented horizontally). The decision to perform the Unit 3 pre-service examination at the Mitsubishi facility was dictated by delivery schedule considerations resulting from the divider plate weld repairs.

- Flow Limiter for Primary Inlet Nozzles – The replacement steam generators were designed with a flow limiter located in the primary inlet nozzle (see figure below) in order to make the reactor coolant system flow similar to the flow rate of the original steam generator and not exceed the maximum allowable reactor coolant system flow rate. The licensee's evaluation for the engineering design package determined that although the original steam generators had a number of plugged tubes, the reactor coolant system flow rate of the original steam generators was near the design requirement. Because the replacement steam generators has 377 more tubes than the original steam generators, and contained tubes with u-bends versus "square bends", the pressure drop of the replacement steam generators with no plugged tubes would be much less than the original steam generators resulting in a higher flowrate.

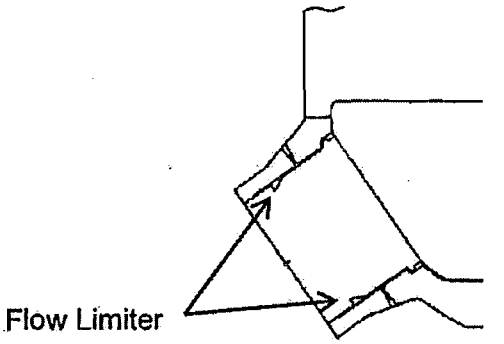


Replacement Steam Generator Primary Inlet Nozzle (For Illustration Purposes Only)

The flow limiter was designed to ensure the total "best estimate" reactor coolant flow rate with the replacement steam generators installed would not exceed 106.5 percent of the design volumetric flow rate of 396,000 gallons per minute at a reactor coolant system cold leg temperature of Tcold = 540.9°F. For Unit 2 replacement steam generators, the flow limiter diameter to nozzle inner diameter ratio was 0.94 while the ratio for Unit 3 steam generators was 0.915 due to Unit ~~3~~? reactor coolant pump replacement. The flow limiter dimensions resulted from a scaled model test performed by Mitsubishi and it was designed to be machined as part of the nozzle base metal.

- Pitch Distance of Tube Support Plate Drilled Holes in Unit 2 Steam Generator 2E0-89 – During fabrication of the tube support plates for Unit 2 steam generator 2E0-89, quality control inspections identified unacceptable measurements of the pitch distance between drilled holes. Mitsubishi fabrication procedures required verification of the total center-to-center distance between ten inline drilled holes at certain sample points of the tube support plate. The dimensional verification checks identified a total of 200 measurements in tube support plate number 3 and 10 measurements in tube support plate number 6 that did not meet the dimensional acceptance criteria established in the fabrication procedures. Mitsubishi evaluated this non-conformance condition and accepted the condition "as-is" with the SCE's approval. The technical justification for accepting the condition addressed four elements: (a) the impact of the condition on the ability to insert the tubes through the affected areas of the tube support plates, (b) resulting stress on the tubes after insertion, (c) impact of the condition on the tube to anti-vibration gap size, and (d) possible occurrence of tube scratch during inspection. Similar unacceptable measurements were not identified in Unit 2 replacement steam generator 2E0-88 or Unit 3 replacement steam generators 3E0-89 and 3E0-88.

- Tube-to-Tube Clearance in Unit 2 steam generator 2E0-89 – During fabrication of Unit 2 replacement steam generator 2E0-89, interference checks identified that the clearance between the tubes in Rows No. 28 and 30 in Column No. 22 was less than the minimum clearance of 0.13-inch specified in Mitsubishi's inspection procedure. The condition was accepted "as-is" by Mitsubishi and SCE through the supplier deviation request process. The main considerations of the technical

evaluation included: (a) thermal expansion difference, (b) tube expansion due to operating pressures, (c) tube displacement due to out-of-plane flow induced vibration, and (d) tube displacement due to seismic acceleration. The team noted that no tube-to-tube wear indications were identified in this area of the tube bundle.

- Anti-Vibration Bar Spacing Issues in Unit 2 Steam Generator 2E0-89 – During fabrication of Unit 2 replacement steam generator 2E0-89, quality control inspections identified unacceptable gaps between tubes and the anti-vibration bars in the outside tube columns. The affected area was identified as welding zone-4. The apparent cause for the anti-vibration bar spacing issue was due to performing the welding of zone-4 while the steam generator was oriented horizontally with this welding zone oriented to the bottom of the bundle. In this configuration, the tube bundle experienced sagging at the time of welding due to gravity. After completion of welding zone 4, the steam generator assembly was rotated 180 degrees for additional assembly steps, but the sagging in the opposite direction caused enlargement of the gaps in welding zone 4 and this enlargement remained approximately the same for all subsequent rotations. When zone-4 was rotated 180-degrees after welding, deflection or sagging of the tube retaining bars due to gravity slightly pulled the anti-vibration bars, increasing the gap between the tube and the anti-vibration bars in this zone.

  With the licensee's approval, Mitsubishi implemented various corrective actions to address the condition in the pending Unit 2 replacement steam generator 2E0-88 and subsequently in Unit 3 steam generators which included: (a) use of smaller spacer blocks between tubes for the installation of anti-vibration bars, (b) re-define the welding zones to limit welding in the horizontal position, and (c) reduce rotations during welding of the other bundle zones. Mitsubishi performed rework activities in Unit 2 steam generator 2E0-89 to restore anti-vibration bar spacing to design specifications. These activities resulted in better gap distribution. All the tube-to-anti-vibration bar gaps exceeding the initial dimensional criteria were further evaluated and accepted in accordance with Mitsubishi's gap size evaluation procedure.

- Rotations of Steam Generator Assembly for Anti-Vibration Bar Installation and Welding – The team noted that welding of anti-vibration bars structure required rotating the steam generators several times. As a result of the corrective actions generated to address the anti-vibration bar spacing issues in Unit 2 steam generator 2E0-89, the installation procedure was revised to reduce the number of rotations for anti-vibration bar installation to attain better gap control. This procedure revision resulted in different number of rotations in each replacement steam generator. Steam generators Unit 2 E0-89, Unit 2 E0-88, Unit 3 E0-89, and Unit 3 E0-88 received 11.25, 4, 3.5, and 3.5 rotations, respectively, during installation of the anti-vibration bars structure.

- Temporary Installation of Plastic Ties – In order to limit the displacement of anti-vibration bars during rotation of the steam generator assembly for welding of the anti-vibration bars structure, Mitsubishi revised the installation procedure to install temporary plastic ties between the retaining bars and the tubes. This step

of the anti-vibration bar assembly process was performed in a different sequence for Unit 2 and Unit 3 steam generators. For Unit 2, the installation of plastic ties occurred after welding the transition wrapper, the Helium leak test, and tube hydraulic expansion, but before welding the channel head to the tubesheet, the hydrostatic tests, and the pre-service inspection. In Unit 3, the installation of plastic ties was performed between welding the transition wrapper and the Helium leak test.

- Dimensional Controls of Anti-Vibration Bar Structure – According to Mitsubishi's preliminary cause evaluation taking place at the time of this inspection, the controls of critical dimensions affecting the clearances between the tube and the anti-vibration bars were gradually improved throughout the fabrication of the Unit 2 and Unit 3 steam generators. This improvement on dimensional controls was a consideration for the determination of the failure mechanism leading to tube-to-tube wear in Unit 3.

  The first dimensional control under consideration was the improvement of tube roundness in the section of the tubes that was bent to form the U-bend shape. During fabrication of Unit 2 steam generator 2E0-89, the supplier of tubular product for Mitsubishi (i.e. Sumitomo), experienced quality issues to meet the G-values established in the design specifications, resulting in a high number of tube rejections. The G-value was a measure of departure from roundness, or "ovality," after the tubes were bent and it was controlled in order to control the gap between tubes and anti-vibration bars (see figure below). The G-values were measured at different locations along the U-bend section of the tubes for a selected number of tubes per row, as established in Mitsubishi's procedure. The acceptance criteria for G-value varied depending on the row where the tubes were installed. The acceptance criteria also remained the same throughout the fabrication of Unit 2 and Unit 3 replacement steam generators.

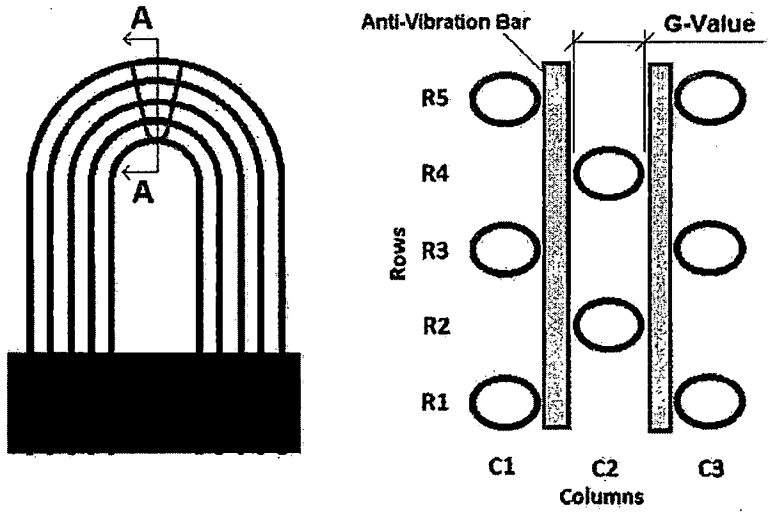


Section A-A

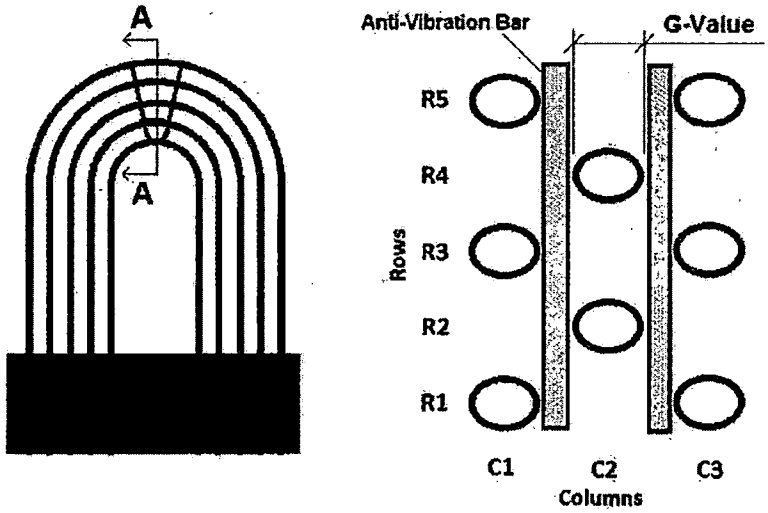


Section A-A

Description of G-Value Parameter (Conceptual Drawing – For Illustration Purposes Only)

Based on discussions with licensee personnel and documentation reviews, the team noted that Sumitomo implemented measures to improve the quality of the tube bending process which resulted in less deviation of G-values and a reduction in the amount and variability of tubing "ovality." Based on the statistical analysis of G-value data collected during fabrication of the Unit 2 and Unit 3 steam generators, Mitsubishi concluded that the G-values ~~standard deviation~~ gradually decreased since the fabrication of the first steam generator.

Another dimensional control under consideration was the variability of anti-vibration bar dimensions. Mitsubishi's fabrication procedures required inspection of various dimensions of the anti-vibration bars to control the gap between the

anti-vibration bars and the tubes. These dimensions were: thickness in the straight sections, twisting and flatness of the straight sections after bending, and thickness of the anti-vibration bar tip (i.e. nose) after bending. Among these dimensions, the twisting and flatness of the straight sections after bending were verified using a "Go or No-Go" approach based on the acceptance criteria in Mitsubishi's procedures but no specific measurements were required to be maintained by procedure. Additionally, the acceptance criteria for anti-vibration bar dimensions remained the same throughout the fabrication of Unit 2 and Unit 3 replacement steam generators. Mitsubishi conducted a preliminary statistical analysis of the available dimensional data for anti-vibration bars and the team concurred that there were minor differences in the statistical distribution of these dimensions in Unit 2 and Unit 3 steam generators.

Comn
any de

[gew]l
inform

Engineering Change Package (10 CFR 50.59): The team determined that the licensee's evaluation for changes in the updated final safety analysis report's design methodologies for the replacement steam generators was consistent with SONGS procedures for the implementation of 10 CFR 50.59 requirements. The licensee's evaluation contained in Engineering Change Packages 800071702 and 800071703 for the Unit 2 and Unit 3 replacement steam generators, respectively, determined that the replacement of the original steam generators did not affect the current licensing basis to the extent of needing prior approval from the NRC as required by 10 CFR 50.59.

In the 50.59 screening evaluation associated with the engineering change package for the Unit 2 and Unit 3 replacement steam generators, the licensee determined that the proposed activity did not adversely affect a design function, or the method of performing or controlling a design function described in the updated final safety analysis report. The licensee also determined that the steam generator replacement activity did not change a procedure in a manner that adversely affected how an updated final safety analysis report design function is performed or controlled. Additionally, the licensee determined that the steam generator replacement activity did not involve a test or experiment not described in the updated final safety analysis report. The licensee evaluated the following updated final safety analysis report design functions in the 50.59 screening:

- Steam Generator Design Functions
- Reactor Coolant System Structural Integrity
- Emergency Core Cooling System Performance
- Non-Loss of Coolant Accident Transients
- Containment Pressure-Temperature Analysis
- Low Temperature Overpressure Protection
- Reactor Protection System, Engineered Safety Features Actuation System, Core Operating Limit Supervisory System, and Core Protection Calculations
- Nuclear Steam Supply System Performance
- Non-Safety Related Control Systems Performance

However, the 50.59 screening evaluation identified three methods of analysis described in the updated final safety analysis report that were affected by the

proposed steam generator replacement and required further evaluation against the criteria in 10 CFR 50.59. The affected methodologies are described below:

- Seismic Analysis of Reactor Vessel Internals – The original analysis of SONGS Unit 2 and Unit 3 reactor vessel internals with the original steam generators was performed with the methodology described in Combustion Engineering Topical Report CENPD-178, "Structural Analysis of Fuel Assemblies for Combined Seismic and Loss of Coolant Accident." Subsequent to the submittal of this report, Combustion Engineering revised the methodology by modifying modeling techniques, computer codes, testing methods, and acceptance criteria in response to changes in licensing requirements. Consequently, the original report was resubmitted to the NRC as CENPD-178-P, Revision 1-P, August 1981. This revision was approved by the NRC in a Letter from H. Bernard to A. Scherer, "Acceptance for Referring of Licensing Topical Report CENPD-178," dated August 6, 1982. The licensee used this revised methodology for the replacement steam generators and considered it as a methodology approved by the NRC for the intended application.

- Reactor Coolant System Structural Integrity – The structural analysis of the original steam generators used ANSYS software for the thermal and stress analyses while the replacement steam generators were analyzed using ABAQUS software. ANSYS was described in the updated final safety analysis report as a large-scale, general-purpose, finite element program for linear and nonlinear structural and thermal analysis of the reactor coolant loop components. The licensee considered ABAQUS to be similar to ANSYS. The licensee compared both programs using thermal and stress sample problems. The comparison demonstrated that the results varied from theoretical solutions by no more than 1 percent, and ABAQUS and ANSYS results themselves were also within 1 percent of each other. The variability of results was determined to be within the margin of error for the subject type of analysis.

- Tube Wall Thinning Analysis – The original steam generator analysis used CEFLASH computer program for the main steam line break mass-energy blowdown analysis, whereas the replacement steam generator analysis used manual calculations to represent the main steam line break blowdown loads by applying the maximum possible tube differential pressure, which bounded the pressure calculated by CEFLASH.

  For loss of coolant accident analysis, the original steam generator used STRUDL computer program to calculate displacement histories and then ANSYS computer program to calculate tube stresses. The tube stresses for the replacement steam generators were determined using ANSYS computer program based on the blowdown forces. For the original steam generators the combination of loads analyzed was primary loop pipe break plus design basis earthquake and main steam line break plus design basis earthquake. For the replacement steam generators, the loss of coolant accident, design basis earthquake, and the main steam line break events were combined as one limiting event, which SCE considered to be a more conservative method of evaluation relative to the original steam generators. The licensee determined that the results of the tube

wall thinning analysis for the replacement steam generators were conservative or essentially the same and the methodology used did not represent a departure from a method of evaluation described in the updated final safety analysis report.

Further discussion is contained in Section 13.0 of this report on the methodology used by the licensee for the reactor coolant system structural integrity and tube wall thinning analysis.

The team noted that a key methodology for the design of the original and replacement steam generators was the thermal-hydraulic code used to model the flow conditions in the steam generators. ~~Mitsubishi's FIT-III thermal-hydraulic~~ The original steam generators were designed using ATHOS thermal-hydraulic code while the replacement steam generators were designed with a proprietary code from Mitsubishi (Need to verify this with Joel. Think the generators were designed before ATHOS was developed in 1985). Mitsubishi's code was accepted by SCE for the design of the replacement steam generators. The team noted that the updated final safety analysis report did not specifically describe ATHOS as the ~~thermal-hydraulic~~ code used for the design of the original steam generators and therefore the ~~use of the FIT-III~~change in thermal-hydraulic code did not constitute a change in methodology or a change in an element of a methodology described in the updated final safety analysis report. The updated final safety analysis report did describe the computer code CRIB as the code used to analyze overall steam generator performance. As described in the updated final safety analysis report, CRIB was used to establish the recirculation ratio and fluid mass inventories as a function of power level in the original steam generators.

With regard to the major design changes between the original and replacement steam generators, the updated final safety analysis report did not specify how the original steam generators relied on special design features such as the stay cylinder, tubesheet, tube support plates, or the shape of the tubes to perform the intended safety functions. The description of the original steam generators was focused on the overall thermal performance characteristics and the applicable codes and standards used for fabrication. The updated final safety analysis report provided a brief description of the egg-crate tube support plate design and its function to prevent concentration of impurities in the tube-to-tube support plate gap, which could lead to tube degradation. The updated final safety analysis report also described degradation issues of the egg-crate tube support plate design as a result of flow-accelerated corrosion and the corrective actions taken to mitigate this degradation mechanism.

Regulatory Guide 1.187, "Guidance for Implementation of 10 CFR 50.59, Changes, Tests, and Experiments," November 2000, allows the use of NEI 96-07, "Guidelines for 10 CFR 50.59 Implementation," Revision 1 for methods that are acceptable for complying with 10 CFR 50.59. Per NEI 96-07, changes affecting structures, systems, or components that are not explicitly described in the updated final safety analysis report can have the potential to adversely affect structure, system, or component design functions that are described and thus may require a 10 CFR 50.59 evaluation. Consistent with this guidance, SCE's 50.59 screening evaluated the differences in subcomponents between the original steam generators and

replacement steam generators as to whether the differences adversely affected the design function (reactor coolant pressure boundary) of the steam generators. The replacement steam generators were designed and fabricated in accordance with quality assurance requirements, and 10 CFR 50.59 does not require the licensee to presume deficiencies in the design or fabrication.

~~c. Conclusions~~

~~The team determined that no significant differences existed in the design requirements of Unit 2 and Unit 3 replacement steam generators.~~ Based on the updated final safety analysis report description of the original steam generators, ~~the team determined that the steam generators major design changes were reviewed in accordance~~one unresolved item associated with the ~~10 CFR~~ 50.59 ~~requirements.~~

~~The team~~review was identified ~~two unresolved items:~~

- ~~Evaluation of Retainer Bar Vibration during the Original Design of the Replacement Steam Generators~~
- ~~Evaluation of changes in Dimensional Controls during the Fabrication of Unit 2 and Unit 3 Replacement Steam Generators~~

~~Additionally, an unresolved item related to a change in a method of evaluation used for the stress analysis calculations~~ and is discussed in Section 13.0 of ~~the~~this report.

5.0 Quality Assurance/Quality Control (Charter Item 5) (Mitsubishi Charter Item 4)

The team reviewed numerous documents from both SCE and Mitsubishi (including sub-contractors, such as Sumitomo) associated with the design, fabrication, and manufacturing of the steam generators for both units. The team reviewed SCE and Mitsubishi's quality assurance program, procedures and implementation activities for the control of purchased material, equipment, and services; inspections; procurement document control; and corrective action and nonconformance activities. Specifically, the team reviewed a sample of Mitsubishi nonconformance reports, audit, survey, all SONGS condition action requests, audits, surveillances, stop work orders, and supplier deviation requests associated with the design and manufacturing of the steam generators. The team concluded that these portions of SCE and Mitsubishi's quality assurance program regarding its safety-related activities were appropriately controlled and implemented.

5.1 SONGS Quality Assurance/Quality Control

a. Inspection Scope

The team reviewed SCE's implementation of their quality assurance program to determine if it complied with the requirements of 10 CFR 50, Appendix B, "Quality Assurance Criteria for Nuclear Power Plants and Fuel Reprocessing Plants." The team reviewed SONGS implementing procedures, quality assurance manual, vendor audits, procurement specifications, corrective action requests, and numerous other documents, as well as interviewed a number of quality assurance/control and engineering personnel

to determine the appropriateness of activities affecting quality conducted during fabrication, manufacturing and delivery of the replacement steam generators.

b. Observations and Findings

No findings were identified.

~~(1)~~1) Policies and Procedures for Supplier Selection and Control

The team reviewed Quality Assurance Manual, Section 17.2.7, "Control of Purchased Material and Services," which defines the process used to ensure that purchased material, source material, and subcontracted services conform to applicable codes and standards. Section 17.2.7.2 of the quality assurance manual provided measures for the approval and control of suppliers and describes the methods that SCE uses to conduct technical and quality assurance evaluations of potential suppliers. Specifically, SCE evaluated an audit performed by Dominion (DA 2002-92, "Dominion Audit of Mitsubishi Heavy Industries"). The evaluation was performed and documented in accordance with SONGS policies and implementing procedures that govern the control of purchased material, equipment, and services. The results of SCE Evaluation MHI-01-04, "Evaluation and Review of Contractor, Consultant, Utility or Licensee Audit Report," stated that Mitsubishi was conditionally qualified for the fabrication and design of the replacement steam generators. An audit was performed by SCE when a sufficient quantity of work had been performed to demonstrate implementation of Mitsubishi's quality assurance program. Southern California Edison-'s oversight of Mitsubishi also included verification of Mitsubishi's activities during fabrication, inspections, testing and shipment of the procured item. After approximately 14 months from the initial evaluation SCE removed the conditional qualification based on results from Evaluation MHI-10SV-05, "Source Evaluation Report of MHI," dated February 8, 2006, and MHI-3SV-06, "Source Verification Report of MHI," dated May 3 2006, and implementation and verification of specific corrective actions. Part of the SONGS oversight plan of Mitsubishi included the placement of SCE quality assurance/quality control personnel (residents) at the Mitsubishi facility. Plan SGR-A10183, "Replacement Steam Generator Resident Oversight Plan," described the roles and responsibilities of the resident management, engineering, and quality oversight implementation strategy for the replacement steam generators. This oversight plan was created to provide reasonable assurance that the design, licensing, fabrication, delivery, and acceptance of the SONGS replacement steam generators were performed in accordance with specified SCE, industry, regulatory, and Code requirements. The team noted that after the resident was placed at Mitsubishi, Source Verifications and Surveillances performed by SCE decreased. After the NRC team conducted several interviews with the SCE personnel responsible for oversight of Mitsubishi it was determined that the resident provided adequate oversight of Mitsubishi's activities. Nuclear Oversight Division Project Oversight Quarterly Reports were provided by SCE that demonstrated no decrease in SCE oversight of Mitsubishi. These responsibilities were shifted to the resident at Mitsubishi. During the review of the documentation generated by the resident the NRC team noted that the resident was performing these activities on behalf of SCE.

~~(2)~~2) Purchase Order Review

The team reviewed purchase order 6C294014 from Edison Material Supply LLC, issued September 28, 2004, for the design, fabrication, and delivery of four replacement steam generators for SONGS Units 2 and 3. The procurement order stated that all related work was to be performed in accordance with Specification SO23-617-01, "Specifications for Design and Fabrication of RSG for Units 2 and Unit 3." Specification SO23-617-01 identified the codes, standards, regulations and other documents applicable to the design, fabrication, and delivery of the replacement steam generators. For example Specification SO23-617-01 invoked American Society of Mechanical Engineers Boiler and Pressure Vessel Code, American National Standards, American Society for Testing and Materials Standards, and Electric Power Research Institute Technical Report 016743-V2R1, "Guidelines for PWR Steam Generator Tubing Specifications and Repair," among others.

~~(3)~~3) Supplier Audit and Surveillance Reports

The team reviewed a sample of audits and surveillances performed on Mitsubishi to verify SCE's approval process of Mitsubishi and subcontracted services. The team noted that the audits and annual assessments reviewed were adequately documented and provided evidence of Mitsubishi's compliance with quality assurance requirements. The team also verified that audit reports supported the conclusions made by SCE.

5.2 Mitsubishi Quality Assurance/Quality Control

a. Inspection Scope

The team reviewed Mitsubishi implementation of their quality assurance program to determine if it complied with the requirements of 10 CFR 50, Appendix B, "Quality Assurance Criteria for Nuclear Power Plants and Fuel Reprocessing Plants." The team also reviewed a sample of reports from audits and surveys that Mitsubishi conducted of various subcontractors, such as Sumitomo to determine the adequacy of oversight provided by Mitsubishi activities affecting quality and that contracted activities were implemented in accordance with the Mitsubishi-approved quality assurance program. In addition, the team reviewed Mitsubishi's Approved Suppliers List to verify that vendors listed were qualified according to Mitsubishi's specifications and that the list was maintained current.

b. Observations and Findings

No findings were identified.

~~(1)~~1) Policies and Procedures for Supplier Selection and Control

The team reviewed Mitsubishi Quality Assurance Manual, Section 4, "Procurement Control," of the which defines the process used to ensure that purchased material, source material, and subcontracted services conform to the applicable requirements

of the American Society of Mechanical Engineers Code and to customer procurement documents. Section 4.4 of the Quality Assurance Manual provided measures for the approval and control of suppliers and described the process that Mitsubishi used to conduct surveys or audits, as required. Additionally, Section 4.4 provided guidance for the preparation of purchase specifications and subcontract specifications, including the imposition of regulatory requirements for the American Society of Mechanical Engineers Code, Section III products.

The team reviewed Procedure BUH94-06, "Vendor Evaluation Procedure," which provided guidance on the evaluation of the quality control capability of suppliers by performing surveys, audits and performance evaluations of the supplier quality assurance program. Procedure BUH94-06 provided a detailed description of the entire process to be followed by auditors before, during and after a survey/audit was performed.

No issues were identified.

~~(2)~~2) Supplier Audit and Surveillance Reports

The team reviewed a sample of external audits and surveys to verify Mitsubishi's approval process of Sumitomo Metal Industries, Limited, Steel Tube Works and Sumitomo Metal Industries, Limited, Pipe & Tube Company Wakayama Steel Works. The team noted that the audits and annual assessments reviewed were adequately documented and provided evidence of each company's compliance with quality assurance program requirements. The team also verified that audit checklists were prepared and completed for the audit and contained sufficient objective evidence to support the conclusions made by Mitsubishi.

During the review, the team learned that as a consequence of nonconformance report UHNR-SON-RSG-06N005 related to inadequate lot control during final mill annealing of the tubing, Mitsubishi issued a stop work order to Sumitomo. As part of their process Mitsubishi visited Sumitomo to find the root cause of the nonconformance. After a review of Sumitomo's corrective action, Mitsubishi was able to confirm the adequacy of the corrective actions and preventive actions. Mitsubishi released Stop Work Order UHH-G06A097 imposed on Sumitomo.

On May 8, 2007, Mitsubishi performed Special Audit UHQ-07N004, on Sumitomo, in order to confirm adequacy of activities based on Sumitomo Corrective Action Plan UHCP-07N004. During the audit Mitsubishi found two findings and made one recommendation. Both findings required corrective action from Sumitomo. The Mitsubishi audit indicated that Sumitomo was not able to perform adequate activities for manufacturing heat transfer tubing in accordance with Sumitomo's shop manual. The causes of the deficiencies identified during the audit were a result of Sumitomo's staff failing to follow the shop manual requirements. Because the two findings were related to the stop work order, Mitsubishi did not allow Sumitomo to start manufacturing activities until adequate implementation of corrective actions were confirmed by Mitsubishi. On June 21, 2007, Mitsubishi verified Sumitomo implementation of the corrective actions. During this visit at Sumitomo, Mitsubishi verified the operations involving straight tube fabrication prior to tube bending

operations were performed in accordance with Sumitomo's shop manual. Mitsubishi found that the same type of corrective actions taken by Sumitomo for straight tube fabrication operations applied to tube bending operations. During the review of the implementation of the corrective actions Mitsubishi could not verify acceptability of Sumitomo tube fabrication operations for the tube bending process. Mitsubishi allowed Sumitomo to restart operation only for the straight tube fabrication. On July-13, 2007, Mitsubishi subsequently confirmed the adequacy of Sumitomo corrective actions on tube bending processes. Mitsubishi verified that the bending operations followed the requirement of the Sumitomo' shop manual. On July 17, 2007, Mitsubishi lifted the restrictions imposed on Sumitomo and they were allowed to restart operations.

No issues were identified.

~~(3)~~3) Maintenance of the Approved Supplier List

The team reviewed Mitsubishi Quality Assurance Manual Section 4, "Procurement Control," which defined the controls for the maintenance, distribution, and update of Qualified Vendor List UES-20100006. According to Section 4, the Nuclear Plant Quality Assurance Section had the responsibility for preparing, approving, and distributing the qualified vendor list and any subsequent revisions. In addition, a review by the quality assurance engineer was required prior to final document approval. Mitsubishi was informed of changes to their supplier's quality assurance manuals through procurement requirements imposed on the suppliers on their certificate of qualification as an approved vendor. If the vendor did not maintain their quality assurance program, they were removed from the qualified vendor list. Prior to issuing a Quality Assurance Manual revision, approved vendors were required to send a copy to Mitsubishi for review and approval, after which Mitsubishi updated the qualified vendor list with the latest revision number and date.

No issues were identified.

5.3 Quality Assurance Conclusion

The team concluded that the quality assurance program requirements for quality activities to support the replacement steam generator project were consistent with the requirements of 10 CFR Part 50, Appendix B. The team also concluded that SCE's and Mitsubishi's quality assurance program requirements were appropriately translated into implementing procedures to support the replacement steam generator project.

6.0 Implementation of Steam Generator Industry Information (Charter Item 6) (Mitsubishi Charter Item 3)

a. Inspection Scope

The team reviewed procurement documentation, Mitsubishi design documentation, and the 10 CFR 50.59 review package to assess SCE's and Mitsubishi's consideration and implementation (as appropriate) of operating experience as part of the steam generator replacement project, and in the steam generator tube inspections conducted during the

current outages for SONGS Units 2 and 3. The team interviewed various personnel with respect to operating experience considerations relating to major design changes incorporated into the replacement steam generators. The team reviewed operating experience in NRC generic communications and worldwide plant operating experience that might potentially be relevant to conditions observed at SONGS.

b. Observations and Findings

No findings were identified.

The original steam generators installed throughout the domestic fleet of pressurized water reactors, including SONGS, experienced widespread corrosion of the tubes and tube support plates, stress corrosion cracking of the tubes, and wear at tube supports. These problems led to the replacement of nearly all of the original steam generators, in most cases well before the end of their design lifetime. For SONGS, the design of the replacement steam generators included a number of design changes to correct life limiting problems with the original steam generators, based in part on consideration of SONGS-specific and industry-wide operating experience. This included use of more corrosion resistant materials for the tubing and tube support plates to mitigate corrosion and stress corrosion cracking issues experienced in the past. The licensee's bid specification required that the stay cylinder feature of the original steam generators be eliminated to maximize the number of tubes that could be installed in the replacement steam generators and to mitigate past problems with tube wear at tube supports caused by relatively cool water and high flow velocities in the central part of the tube bundle. Mitsubishi employed a broached trefoil tube support plates instead of the egg crate supports in the original design. In addition to providing for better control of tube to support plate gaps and easier assembly, the broached tube support plates were intended to address past problems with the egg crate supports by providing less line of contact and faster flow between the tubes and support plates, reducing the potential for deposit buildup and corrosion. Mitsubishi selected a u-bend configuration for the upper part of the tube bundle instead of the square bend design of the original steam generators based on its experience that u-bends were easier to fabricate and support and were easier to inspect.

The team's review of Mitsubishi design documentation for the anti-vibration bars indicates that Mitsubishi considered wear in the u-bend region as the most important issue affecting the anti-vibration bar design. Mitsubishi reviewed operating experience regarding wear in the u-bend region of replacement steam generators and trended the experience data as a function of steam generator manufacturer, tube packing arrangements (tube pitch, square versus triangular arrays), and steam generator size. The SONGS steam generators are relatively large, and Mitsubishi acknowledged that this and the tight tube packing geometry could affect wear experience. Mitsubishi stated that the SONGS replacement steam generator were designed to minimize these concerns by providing more support points with shorter spans in the u-bend region along with effective zero gaps between the tubes and anti-vibration bars during steam generator operation. Mitsubishi manufacturing was designed on achieving very small uniform gaps between the tubes and anti-vibration bars during assembly.

Engineering Change Package NECP 800071703 for the replacement steam generators

evaluated industry operating experience as it related to the manufacture and operation of the replacement steam generators. Several of these experiences related to fabrication issues, lack of weld quality, material defects, loose parts, lack of cleanliness, and failure to fully expand tubes in the tubesheet. The licensee found most of these issues to be applicable to the replacement steam generators at SONGS, but that these kinds of issues would be adequately addressed by the supplier's (typically Mitsubishi) augmented quality assurance procedures and continuous quality oversight by the licensee. The licensee also cited augmented receipt inspections, in-process verifications, foreign material exclusion and control, and cleanliness inspections on the part of the supplier or the licensee, as applicable, as addressing these issues.

The licensee addressed industry operating experiences relating to stress corrosion cracking of steam generator tubing by noting that the Alloy 690 thermally treated tubing in the replacement steam generators were expected to be substantially more resistant to stress corrosion cracking than the tubing alloys used in earlier model steam generators. The licensee also addressed experience at another unit which experienced tie rod and consequential tube bow as a result of differential thermal expansion between the tubes and shroud and unexpected interference between some tube support plates. The stay rod (equivalent to tie rods at other unit) and shroud material for the replacement steam generators have been selected to have similar coefficients of thermal expansion which would preclude a similar problem.

Steam Generator Degradation Assessment 51-9176667-001 (prepared by AREVA) supporting steam generator inspections during the current outages for Units 2 and 3 evaluated industry operating experience relating to steam generator in-service inspections. This included operating experience reports, including NRC Information Notice 2010-05, "Management Of Steam Generator Loose Parts And Automated Eddy Current Data Analysis," relating to eddy current test probe issues and data analysis errors. In response to these issues, SCE personnel stated that specific training was given to the data analysts at SONGS on the lessons learned from these experiences and where applicable, appropriate data was included in the SONGS site specific performance demonstration. The licensee also described additional measures that would be taken at SONGS to address these issues. The review also addressed operating experience reports dealing with unexpected tube support indications or lack thereof. In response, SCE stated that indicated anti-vibration bar locations by eddy current will be compared to the anti-vibration bar locations specified in the Mitsubishi design drawings.

Steam Generator Degradation Assessment 51-9176667-001 also addressed numerous operating experience reports involving loose parts and foreign objects in steam generators, including several instances involving resultant damage to steam generator tubing. These reports included NRC Information Notices 2004-10, "Loose Parts in Steam Generators," 2004-16, "Tube Leakage Due to a Fabrication Flaw in a Replacement Steam Generator," and 2004-17, "Loose Part Detection and Computerized Eddy Current Analysis in Steam Generators." Some of these reports dealt with eddy current probes, or pieces of probes, which were left behind as loose parts on the primary side. Most of the operating experience reports related to lose parts and foreign objects on the steam generator secondary side. In response, SCE approach for addressing this issue was through procedure changes and secondary side visual inspections which

included the open tube lane, the entire peripheral annulus, and appropriate visual examination followup on eddy current indications of possible loose parts. The inspection with the exception of the loose parts component was performed, as scheduled, during the current refueling outage for SONGS Unit 2. The inspection for loose parts will be performed at the first scheduled inspection during the next refueling outage. The team noted that possible loose parts indications were not found during the 100 percent eddy current test inspection of the Unit 3 steam generators during the current outage. The team also noted that secondary side visual inspections were performed in the upper bundle area of the Unit 3 steam generators to evaluate the tube-to-retainer bar intersections and in a limited area above the 7th tube support plate.

The NRC staff issued many generic communications relating to steam generator tube integrity issues since the 1980s. The team reviewed these documents and determined that many of these related to the potential for stress corrosion cracking of the tubes which the staff found was not expected to be a concern for the thermally treated Alloy 690 material in the SONGS replacement steam generators by virtue of its greatly enhanced resistance to stress corrosion cracking. Most of the others related to problems encountered with eddy current flaw detection and sizing, the occurrence and detection of loose parts/foreign objects, and monitoring of primary to secondary leakage. The team's review indicated that lessons learned from these NRC generic communication documents had generally been incorporated into industry guideline documents relating to steam generator inspections, monitoring of primary-to-secondary leakage, and other guidelines documents prepared by the Electrical Power Research Institute. This information was incorporated into the licensee's inspection and leakage monitoring guidelines.

The team reviewed NRC generic communications not falling into one of the above categories for potential relevance to SONGS Unit 2 and 3. One of these was NRC Information Notice 2004-16 concerning an operational leakage event at another plant due to damage caused by a packing screw during transport to the steam generator manufacturer. The licensee stated in its steam generator change package that this incident was precluded for SCE by prohibiting the use of screws and nails as fasteners for tubing shipping crates. The licensee also addressed NRC Information Notice 2007 37, "Buildup of Deposits in Steam Generator," concerning fatigue of a low row u-bend at a foreign unit as a result of deposit build up and lack of support for the low row u-bend. Engineering Change Package NECP 800071703 specified that this type of incident was precluded in the replacement steam generators by virtue of anti-vibration bar supports extending to the low row u-bends. Steam Generator Degradation Assessment 51-9176667-001 documented that this type of problem reflected an advanced stage of deposit accumulation that was not anticipated for the foreseeable future in the SONGS replacement steam generators.

~~e. Conclusions~~

~~The team's review indicated that lessons learned from these NRC generic communication documents had generally been incorporated into industry guideline documents relating to steam generator inspections, monitoring of primary-to-secondary leakage, and other guidelines documents prepared by the Electrical Power Research Institute. This information was incorporated into SCE's design specifications, inspection~~

~~and, leakage monitoring guidelines.~~

7.0 Packing, Shipping, Handling, and Receipt Inspection (Charter Item 7)

a. Inspection Scope

The team interviewed licensee personnel involved with the packing, shipping, handling, and receipt inspection of the replacement steam generators. In addition, the team reviewed SCE receipt acceptance criteria to assess if critical attributes were appropriately specified and if the licensee had the ability to assess acceptability of meeting those acceptance criteria. The team reviewed evaluations associated with supplier deviation reports, nuclear notifications and changes to handling specifications. With respect to replacement steam generators the team focused on differences in SONGS shipping, handling, and receipt acceptance between the Unit 2 and 3 steam generators from the manufacturing site in Japan to final installation on site.

b. Observations and Findings

No findings were identified.

The team identified three unresolved items for which additional information is required to determine if performance deficiencies exist or if the issues constitute violations of NRC requirements.

(1) Introduction: The team identified an unresolved item associated with Unit 3 steam generators not shipped in accordance with specification SO23-617-01, "Design and Fabrication of Replacement Steam Generators for ~~Unit 2 and Unit 3," Revision 4,~~ Units 2 and 3" (title does not match Documents Reviewed section – please check other titles for your sections) and requirements for handling, storage, and shipping. Specifically, ANSI N45.2-1977, "Quality Assurance Program Requirements for Nuclear Facilities," required a special protective environment for handling, storage, and shipping of the replacement steam generators. However, because of schedule changes, the Unit 3 protective environment which included maintaining a nitrogen pressure and a monitoring plan was altered significantly.

Description: The team evaluated specifications associated with the shipping and handling of the Unit 2 and 3 replacement steam generators. Based on the information evaluated by the team, the steam generators procurement and shipping specifications required monitoring and maintenance of nitrogen atmosphere inside the replacement steam generators during shipment. Supplier Deviation Request SDR 10041870-09091 dated December 1, 2009, documents a request "not to control the positive pressure, the dew point of nitrogen, and the oxygen content on the primary and secondary side of the Unit 3 replacement steam generators to accelerate delivery schedule."

Specification SO23-617-01, "Design and Fabrication of Replacement Steam Generators for Units 2 and 3," Revision 4, Section 3.16.3, specifies the supplier shall be responsible for monitoring and maintaining nitrogen atmosphere inside the steam

generators during their shipping from Mitsubishi to the California port discharge point. The team noted that Unit 3 steam generators did not require, monitoring or control of dew point, oxygen concentration, inside nitrogen pressure. The team could not identify if this was properly evaluated (Reference Section 5 of shipping and handling procedure SO23-617-1-M1350).

Additional review and follow up will be required to review the evaluations and corrective actions associated with the maintaining the Unit 3 replacement steam generators protective environment during shipping and then determine whether this issue represents a performance deficiency or constitutes a violation of NRC requirements. This issue is identified as URI 05000362/2012007-05, "Shipping Requirements not in Accordance to Industry Standards."

(2) Introduction: The team identified an unresolved item associated with the shipping and handling specifications requiring methods of tube bundle support. The team could not determine if this requirement to provide a tube bundle support method was adequately evaluated by SCE.

Description: Based on the information gathered by the team on shipping and handling specifications associated with the Unit 2 and 3 replacement steam generators, the team could not determine that Mitsubishi or SCE adequately considered the potential impact of not providing methods of tube bundle supports as required in ~~Specification~~ SO23-617-01, "Design and Fabrication of Replacement Steam Generators for Units 2 and 3." In response to the team questions regarding tube bundle support methods, the team was provided with results from Procedure L5-04GA069, "Sagging Measurement Procedure," Revision 7. However the team noted the procedure is considered a non-quality affecting procedure and used for reference only.

Additional review and follow up will be required to review the evaluations associated with the requirements to provide tube bundle support during shipping for the Unit 2 and 3 steam generators and then determine whether this issue represents a performance deficiency or constitutes a violation of NRC requirements. This issue is identified as URI 05000362/2012007-06, "Shipping Requirements not in Accordance to Design and Fabrication Specifications."

(3) Introduction: The team identified an unresolved item associated with evaluation of excessive shipping induced forces of Unit 3 replacement steam generator 3E-088.

Description: The team reviewed the SG shipping accelerometer data reports for both Unit 2 and Unit 3. In addition, the team also reviewed shipping and handling records and identified the following:

- Different transoceanic shipping companies and ships were used (U2: Happy Ranger, U3: Enchanter)
- During the discharge from the ship Unit 3 replacement steam generator 3E0-88 (3B) recorded simultaneous signals on the three attached accelerometers

- Unit 3 steam generator 3E0-88 was the only steam generator to record simultaneous signals on the three attached accelerometers
- Unit 3 steam generators received significantly more accelerometers hits compared to Unit 2

Unit 3 replacement steam generator 3E0-88 accelerometers indicated up to a 1.23 g spike with a simultaneous recording on all three of the attached accelerometers. Mitsubishi provided an evaluation of the forces which showed loads were within allowable stress limits but exceeded stress for an operating basis earthquake. The team was not able to determine if this was properly considered.

Additional review by the NRC is required to fully assess if the shipping forces contributed to the tube-to-tube wear in Unit 3 and then determine whether this issue represents a performance deficiency or constitutes a violation of NRC requirements. This issue is identified as URI 05000362/2012007-07, "Unit 3 Steam Generator ~~3E0-88~~ 3E-088 Stresses Related to Handling."

~~c. Conclusions~~

~~The team identified three unresolved items related to the shipment of Unit 3 steam generators; however, the team did not identify any connection between these shipping changes and the unexpected tube-to-tube wear.~~

~~The unresolved items are :~~

- ~~Shipping Requirements not in accordance with Industry Standards~~
- ~~Shipping Requirements not in accordance with Design and Fabrication Specifications~~
- ~~Unit 3 Steam Generator 3E0-88 Stresses Related to handling~~

8.0 Thermal-hydraulic and Flow Induced Vibration Modeling (Charter Item 8)

a. Inspection Scope

The team conducted and overall review of Mitsubishi thermal-hydraulic design documents and drawings used in the manufacture of the Units 2 and 3 steam generators. The team developed an independent ATHOS model to run simulations for various operating conditions to assess thermal-hydraulic phenomena in the steam generators and assess differences in key parameters based on changing operating conditions. The objective of the modeling was to understand the interactions of the key parameters to compare ATHOS modeling results to the degradation trends found during the eddy current inspections.

~~The team reviewed portions of the vibration modeling. Two~~The team was not able to perform any independent tube vibration analysis because the NRC does not have the associated vibration software programs. However, since two key outputs of the thermal-hydraulic code are inputs to the vibration model, the ATHOS model results for fluid velocity and void fraction were used to predict increases or decreases in vibration forces and amplitude.

b. Observations and Findings

No findings were identified.

The team identified one unresolved item for which additional information is required to determine if a performance deficiency exists or if the issue constitutes a violation of NRC requirements.

(1) Introduction: The team identified an unresolved item associated with the adequacy of Mitsubishi's FIT-III thermal-hydraulic code. The FIT-III code predicted non-conservative low velocity and low void fraction results which were used as inputs to the vibration code FIVATS. These non-conservative thermal-hydraulic results lead Mitsubishi to conclude that margins to instability were significantly larger than they actually were.

Description: Replacement steam generators were designed and manufactured in accordance with SONGS Design Specification SO23-617-~~1 and~~1, "Conformed Specification for Design and Fabrication of Replacement Steam Generators for Unit 2 and Unit 3," Revision 4 and ASME Section III, "Rules for Construction of Nuclear Facility Components". The replacement steam generators had enhanced materials and maintenance.

The tube bundle, comprised of 9727 u-tubes, is supported by a set of seven tube support plates which are maintained and spaced by a network of tie-rods. The ends of the u-tubes were welded onto the tube sheet lower face cladding and were full depth expanded in the tube sheet holes. The u-bends are supported by a set of 6 anti-vibration bars, having a maximum of 12 contact points, in the center of the bundle. For shorter tubes near the periphery, a fewer number of anti-vibration bars are present.

One of the major enhancements of the replacement steam generators was the use of Alloy-690 tubing versus Alloy-600 for corrosion resistance. Alloy-690 has lower heat conductivity so, to achieve ~~the~~ same power, the heat transfer surface area must be increased by at least 10 percent. This required more tubes to be used in the replacement steam generators. The increased number of tubes resulted in a more tightly compacted tube bundle and elimination of the stay cylinder. The increase in the number of tubes could lead to increases in primary reactor coolant flow through the steam generators. Orifices were ~~machined as part of~~installed in the steam generator inlet nozzles to ensure maximum allowed primary system flowrates were not exceeded.

The tube layout indexing or incrementation used in these generators was smaller than other replacement steam generator designs. The tighter indexing results in smaller pitch/diameter ratio in critical regions of the tube bundle u-bends. In addition, it was noted that the anti-vibration bar support structure is not connected to the wrapper for lateral or vertical support; instead the anti-vibration bar system structure is only supported vertically by resting on the tubes.

Other operational and physical comparisons of the replacement steam generators and original steam generators were reviewed by the team and no significant differences were noted.

Additional review by the NRC is required to fully assess the adequacy of Mitsubishi's FIT-III thermal-hydraulic code and then determine whether this issue represents a performance deficiency or constitutes a violation of NRC requirements. This issue is identified as URI 05000362/2012007-08, "Non-Conservative Thermal-Hydraulic Model Results."

~~(2)~~8.1 Thermal ~~Hydraulic and Vibration~~hydraulic Assessments

The replacement steam generators thermal hydraulic operation and responses were based on the steam generator design geometric characteristics and operating parameters of the reactor coolant flow and temperature and the secondary feedwater flow and temperature. Calculations were performed for 0 to 100 percent power, beginning-of-life and end-of-life conditions considering limiting tube plugging and fouling. The important actual operating parameters selected for use in the model were saturation pressure, circulation ratio, steam flowrate, tube and shell side pressure drops, water and steam inventories, and global heat transfer coefficient.

Mitsubishi used the SSPC (Steady State Performance Calculation) code to compute these operational parameters, as described in Mitsubishi Document L5-04GA510, "Thermal and Hydraulic Parametric Calculations," Revision 5. The FIT-III code was used to determine thermal-hydraulic fluid flow conditions, with the results described in Mitsubishi Document L5-04GA521, "3D Thermal and Hydraulic Analysis," Revision 3. The FIVATS code was used to compute tube stability ratios that are used to predict tube vibration, with results described in Mitsubishi Document L5-04GA504 "Evaluation of Tube Vibration," Revision 3. In addition, the ABAQUS code was used compute stress and natural vibration frequency, and a code called IVHET was used for tube wear analysis. The key design code for tube

bundle design and vibration analysis is thermal-hydraulic code FIT-III since it computes the two key parameters (fluid velocity and density[1]) that are the primary contributors to the onset of fluid-elastic instability, which indicates the potential for excessive tube vibration.

The Mitsubishi acceptance criterion for vibration was to avoid fluid-elastic instability of tube spans by keeping the calculated stability ratios less than 1. Mitsubishi used the approach given in the ASME code Section III, Division 1, Appendix N-1330, "Flow-Induced Vibration of Tubes and Tube Banks," to calculate stability ratios and they also avoided natural frequencies of the tubes similar to the reactor coolant pump dynamic frequencies.

Design specific flow induced vibration analysis was performed for select U-bend tubes exposed to the greatest vibration risk, generally those with longest unsupported length under most limiting operating condition (lowest steam pressure, end of life design conditions). The phenomenon of fluid-elastic instability of tubes is characterized by cross-flow velocity (for out-of-plane mode) and normal velocity (for in-plane mode) where the local velocities exceed a critical velocity value (given via Conners' Equation[2]). The parameter of local velocity divided by critical velocity is referred to as stability ratio. The accuracy of calculating fluid-elastic instability is limited based on inputs that are best determined by design-specific mockup test data. Mitsubishi did not perform design-specific mockup tests, but used generally accepted test data, and other data based on Mitsubishi test rigs that were not specific to the SONGS replacement steam generator design.

If operating velocities reach this critical value, vibration amplitudes can increase rapidly and fluid-elastic instability forces can lead to rapid pulsation and damaging of tubes. The U-bend region is most susceptible because (1) the local fluid has a higher void fraction, with high velocities; (2) the fluid flow is in a direction normal to the tube, and (3) the anti-vibration bars are limited in their dampening capability along the plane of the tubes. Traditional design of anti-vibration bar systems have not considered in-plane fluid forces since it was accepted that the rigidity and dampening strength of the tube in this direction was adequate to preclude it. This event at SONGS is the first US operating fleet experience of in-plane fluid-elastic instability, sufficient to cause tube-to-tube contact and wear in the U-bend region.

The team noted that Design Specification SO23-617-1, "Conformed Specification for Design and Fabrication of Replacement Steam Generators for Unit 2 and Unit 3," Revision 4, did not address specific criteria for stability ratio and does not mention fluid-elastic instability. The team did find that the Mitsubishi calculated design values for stability ratios did not exceed 0.5. It is important to note, that each steam generator manufacturer has different design values for maximum stability ratios; therefore there is no standard value. The smaller that the design stability ratio is (has to be less than 1), the more margin to fluid-elastic instability.

---

[1] Void fractions and density are inversely proportional.

[2] Fluidelastic Vibration of Heat Exchanger Tube Arrays, Journal of Mechanical design – Volume 100 – April 1978, H.J. Connors, JR.

Mitsubishi computed the flow-induced vibration status of the steam generators in Document L5-04GA504, "Evaluation of Tube Vibration," Revision 3. The critical flow velocity, Uc, was obtained using the Connors' Equation based on output fluid velocities and densities from their FIT-III thermal-hydraulic model. The critical flow velocity is then calculated based on damping ratio, tube mass, tube outside diameter, averaged local cross flow gap velocity, and fluid density per selected tube. The method is based on formulations given in the ASME code Section III, Division 1, Appendix N-1330, "Fluid Elastic Instability". The ratio of normal-to-tube cross flow gap velocity to this critical velocity defines the "stability ratio".

Steam generator vendors must develop specific methods based on the thermal-hydraulic code selected and experimental data used to determine coefficients in the Conners' Equation for their particular steam generator design. The experimental data used ~~in determining~~justify the ~~coefficients~~methods can be developed from in-house tests or taken from published industry data. Mitsubishi indicated that in their methodology two conservatisms were used in their bundle vibration analysis: (1) FIT-III gap velocities were averaged and multiplied by 1.5 and (2) one of 12 anti-vibration bars contacts were assumed to be inactive. The team noted that in Mitsubishi Document L5-04GA504, "Evaluation of Tube Vibration," Revision 3, the 1.5 multiplier was not an added conservatism but a requirement, needed to match test data results.

The team developed an independent model of the new steam generators using the ATHOS thermal hydraulic code[3]. The calculations were intended to assess operating cycle differences between Units 2 and 3 steam generators and review thermal hydraulic phenomena within the steam generators in order to investigate key parameters and causal factors for the excessive tube wear rates. The NRC ATHOS calculations determined that the differences in primary inlet temperature and steam flow between the units were negligible. NRC ATHOS results indicated high void fractions and high u-bend gap velocities existed in the bundle as compared to Mitsubishi FIT-III analyses used for design.

Mitsubishi provided a comparison of their ATHOS model to their FIT-III model results. The Mitsubishi ATHOS model fluid velocities were ~~approximately~~2.5 to 3 times higher than the FIT-III model velocities with the 1.5 multiplier applied. Other independent code calculations, including an analysis by Westinghouse using their in-house modified version of ATHOS and an analysis by AREVA using their French code CAFCA4 showed similar thermal-hydraulic results (up to 4 times higher velocities than FIT-III) as those computed in the Mitsubishi ATHOS results and the NRC independent ATHOS calculations. Based on these comparisons, it was concluded that the FIT-III code and model results used for design were non-conservative even with the multiplier applied.

---

[3] ~~ATHOS~~ATHOS3/SGAP Version 3.~~1~~.0-S: A Computer Program for Thermal-Hydraulic Analysis of ~~the Thermal-Hydraulics of a Steam Generator, 2008~~

~~[4] R. Voilette, M. J. Pettigrew, N. W. Mureithi, "Fluidelastic Instability of an Array of Tubes Preferentially Flexible in~~Generators, February 2005 **(need to verify this is the version that the ~~Flow Direction Subjected to Two Phase Cross Flow," Trans. ASME. Journal of Pressure Vessel Technology, 128, 148 (2006).~~NRC has a license for use. Did Carl re-run the ATHOS model using newest version and did it change our results?)**

Most of the experimental work in fluid-elastic instability has been carried out for two-phase flow, with an air-water medium. Accepted industry data, as presented by the Mitsubishi, shows that in staggered array bundles (triangular pitch, pitch/diameter =1.33), the onset of tube instability for modern steam generators, such as SONGS steam generators, can start at tube gap velocities above 6 meter/sec (pending effectiveness of the dampening structure)[4]. (please add reference for this statement). The NRC ATHOS model results indicated that there was a substantial localized region in the lower hot side of the u-bends where velocities exceeded 6 m/sec.

The NRC ATHOS calculations were compared to gap velocities computed both with the Mitsubishi ATHOS and the FIT-III models. Since tube R142C88 was the only one common for each of the analyses, it can be used as basis for comparison. The effective peak velocities were as follows:

- NRC ATHOS – 5.2 m/sec
- Mitsubishi ATHOS – 5.6 m/sec
- Mitsubishi FIT-III – 2.5 m/sec

Both the NRC and Mitsubishi ATHOS results were reasonably consistent and strongly suggested that high velocities coupled with high void fraction were primary causal factors in the tube fluid-elastic instability and the excessive wear patterns observed in the Unit 3 steam generators.

The team reviewed the verification and validation of both the Mitsubishi FIT-III thermal-hydraulic and FIVATS tube vibration models as stated in Specification SO23-617-1, Revision 4. The specification required Mitsubishi to design and build the steam generators in accordance with ASME NQA-1, "Quality Assurance Requirements for Nuclear Facility Applications," 1994, Subpart 2.7 "Computer Software" and Mitsubishi's quality assurance program.

The team reviewed Mitsubishi's verification and validation Report KAS-20050201, "FIT-III Code Validation Report," Revision 2. The report concluded the FIT-III code was valid for prediction of velocity and density behavior of two-phase flow under nominal conditions for the secondary side of PWR steam generators.

The team reviewed Mitsubishi's verification and validation Report KAS-20040253, "FIVATS Code Validation and Qualification Report," Revision 3. The FIVATS model was designed to calculate the stability ratios by using the flow velocity and density distributions from the FIT-III model. The FIVATS model primarily used the Conners' Equation, and validation was performed mainly by comparison to hand calculation; however, Mitsubishi used a mock-up test facility with a simple anti-vibration bar structure as part of their validation effort. The report concluded that adequate validation and qualification was performed to show compliance to software requirements and that the code could predict flow-induced vibration.

The team requested additional information as part of the verification and validation of the FIT-III thermal-hydraulic model. Mitsubishi provided several additional reports. One of the reports showed benchmarking comparisons to a French test facility

program called CLOTAIRE in 1986. Another report conducted in 2002, showed comparisons between FIT-III and ATHOS, and concluded that both codes had good correlation with the CLOTAIRE experimental data. Because of the limited information provided, the team could not determine the validity of the benchmarking of FIT-III.

Overall, the team determined that the validation and verification of the FIT-III code did not present overwhelming evidence that this code has been adequately benchmarked. The team did not find any problems with the validation of the FIVATS code.

### ~~(3)~~8.2 NRC ATHOS Results

Figures 1 through 4 (different view angles of same results) show results, with low $T_{hot}$ and low steam pressure and present a 3D isometric encapsulation of steam qualities (red scale) at and above 0.9 (i.e., void fraction > 0.99) and field velocities at and above 6.0 m/sec (white scale).

The ATHOS model results of high steam quality and steam velocity closely align with the area of concern (tube-to-tube wear) in the Unit 3 replacement steam generators. In Figure 5, the code predicted regions of high void fraction and high steam velocities (vertically located z-axis cut at about 20 inches above the 7$^{th}$ TSP) are superimposed with tube-to-tube wear indications from Unit 3 steam generator 3E0-88.

The tube-to-tube wear indications align with anti-vibration bar wear indication trends; however, the anti-vibration bar wear patterns appear to indicate a more square-like, essentially rectangular behavior that suggests that there may also be a mechanical, fabrication, assembly, and/or material contribution to the tube-to-tube wear degradation.

**Figure 1**

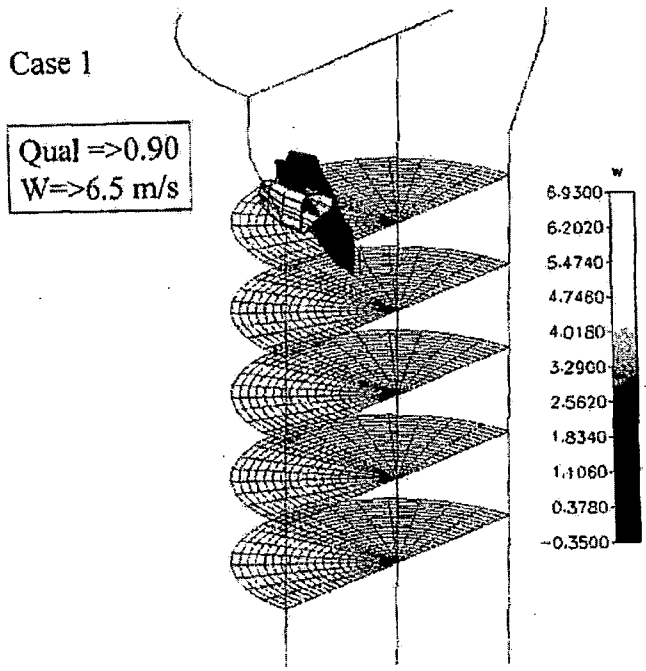
Case 1
Qual =>0.90
W=>6.5 m/s
W
6.9300
6.2020
5.4740
4.7460
4.0180
3.2900
2.5620
1.8340
1.1060
0.3780
-0.3500

**Figure 2**

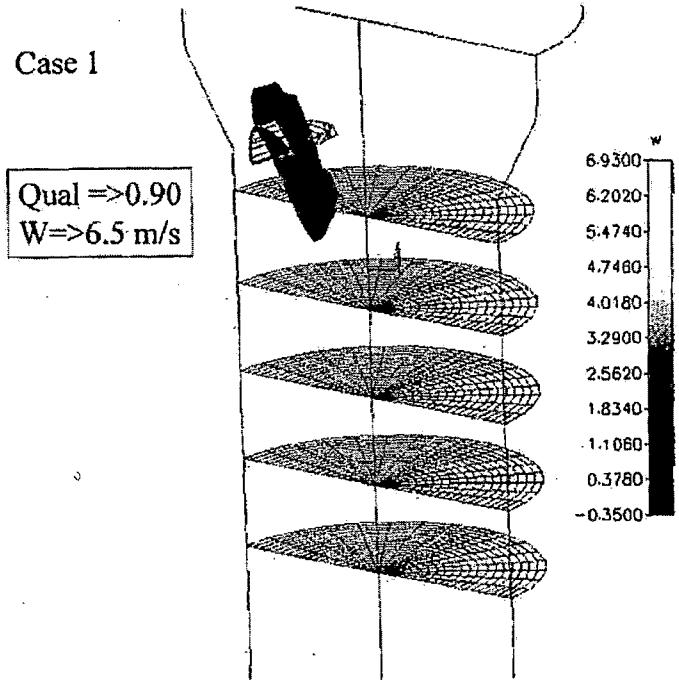


**Figure 3**

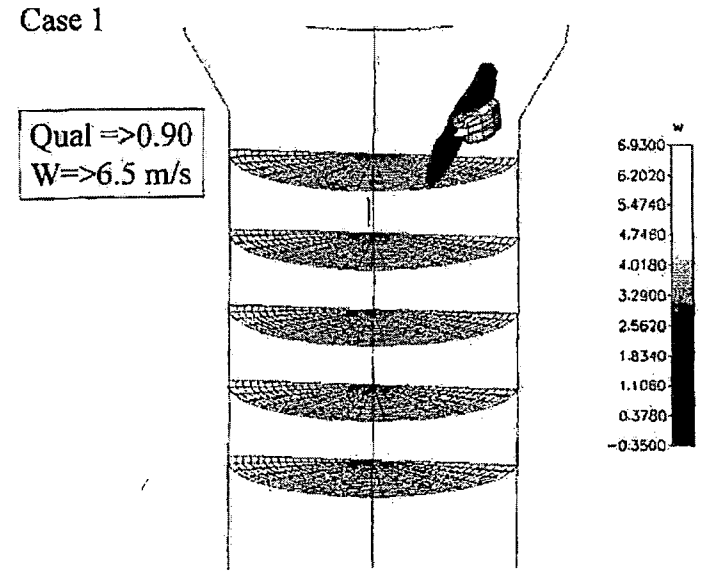

Case 1

Qual =>0.90
W=>6.5 m/s

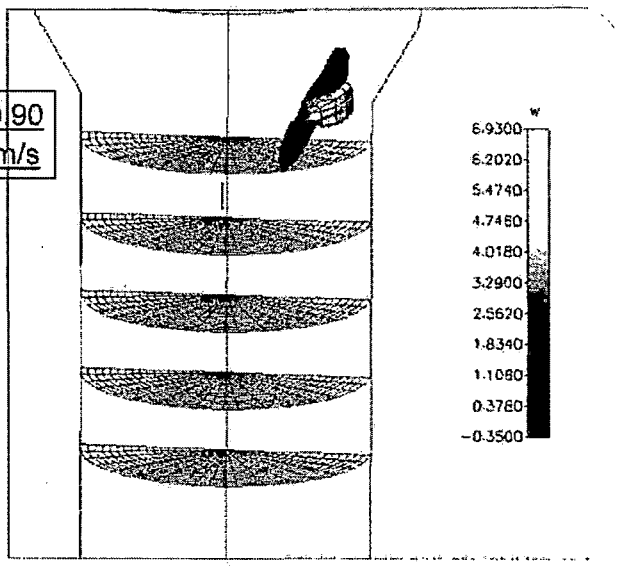


**Figure 4**

Case 1

Qual =>0.90
w=>6.0 m/s

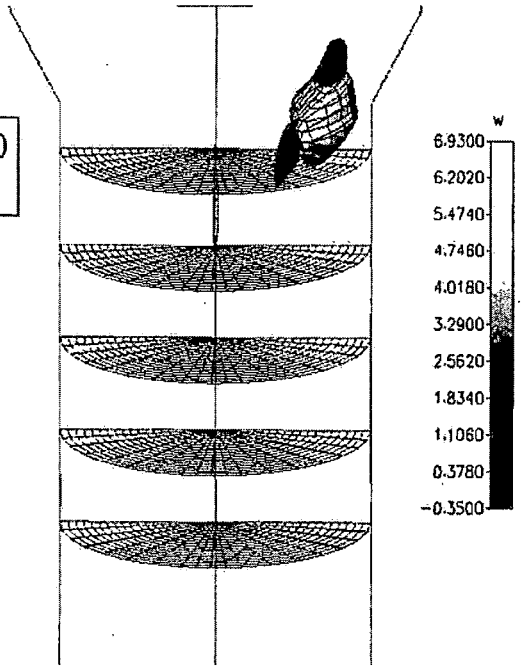

~~The ATHOS code predicted regions of high void fraction and high steam velocities are superimposed with tube-to-tube wear indications from Unit 3 steam generator 3E0-88~~

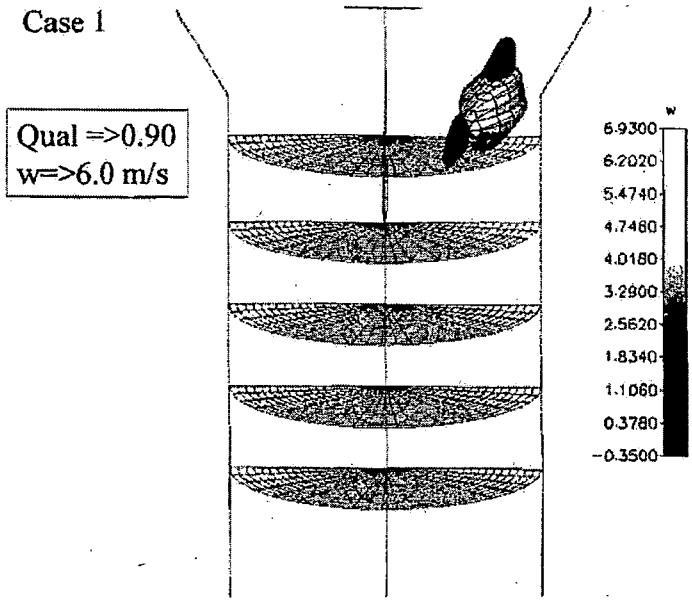


**Figure 5**

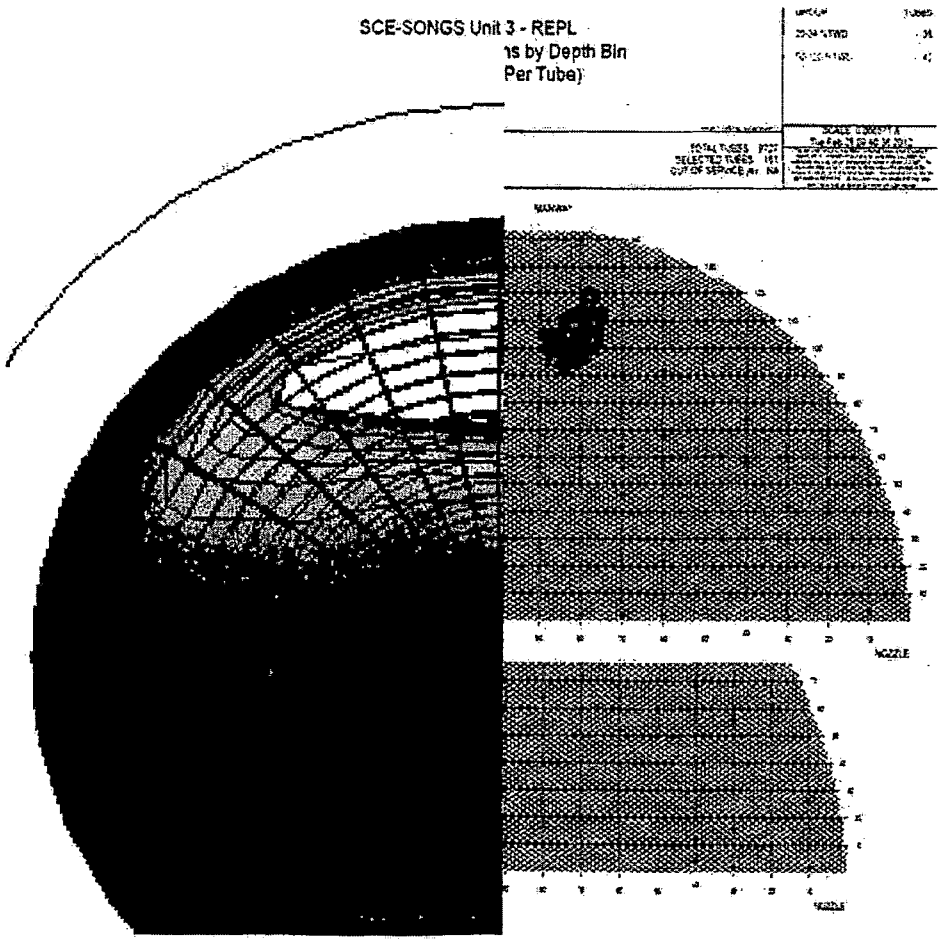


Enclosure

Form

The NRC analysis indicated a correlation with the tube-to-tube wear based on a combination of high void fraction and high steam velocities. It should be noted that the traditional forcing function, fluid velocity squared times density, does not show good agreement with the tube-to-tube wear patterns. This indicated that the high quality steam fluid velocities and high void fraction may be sufficiently high to cause conditions in the generators conducive for onset of fluid-elastic instability.

The above analyses apply equally to Units 2 and 3, so it does not explain why the accelerated fluid-elastic instability wear damage was significantly greater in Unit 3 steam generators. The ATHOS thermal-hydraulic model predicts bulk fluid behavior based on first principals and empirical correlations and as a result it is not able to evaluate mechanical, fabrication, or structural material differences or other phenomena that may be unique to each steam generator. Therefore this analysis cannot account for these mechanical factors and differences which could very likely also be contributing to the tube degradation.

~~c.~~8.3 Conclusion

Form

~~The team identified one unresolved item associated with the non-conservative FIT-III thermal-hydraulic model results.~~

Based on independent NRC thermal-hydraulic analysis, the team concluded that the SONGS replacement steam generators were not designed with adequate margin to

Form

preclude the onset of fluid-elastic instability. Therefore unless changes are made to the operation or configuration of the steam generators, high fluid velocities and high void fractions in localized regions in the u-bend will continue to cause excessive tube wear and accelerated wear that could result in tube leakage and/or tube rupture. The deficiencies appear to be related to Mitsubishi's FIT-III thermal hydraulic code having predicted non-conservative low velocity results and low void fractions. These results ~~led~~lead Mitsubishi to conclude that margins to instability were significantly larger than they actually are. This assessment is based on eddy current data, NRC ATHOS analysis, Mitsubishi ATHOS analysis, and other thermal-hydraulic analyses completed by Westinghouse and AREVA that all identified significantly higher fluid velocities and void fractions than FIT-III.

Based on the cause evaluation and corrective action plan, SCE determined that the best solution to prevent tube-to-tube wear was to conservatively plug and stabilize the affected areas. By taking the impacted tubes out-of-service, SCE determined that this should reduce the potential for localized fluid velocities reaching critical velocity. In addition, in order to ensure sufficient margin to preclude the onset of fluid-elastic instability, SCE determined that reactor power would also have to be reduced. At this time SCE is still developing additional corrective actions to prevent tube-to-tube wear. The actions have not been finalized and no determination has been made concerning the appropriate power level. The NRC has not made any conclusions on the proposed corrective actions. Once the corrective actions have been finalized, they will be ~~inspected~~reviewed and evaluated as part of the Confirmatory Action Letter followup inspection.

9.0 Risk Assessment (Charter Item 9)

a. Inspection Scope

The team reviewed the steam generator tube leak and failures of multiple steam generator tubes during in-situ pressure testing to support an assessment of the risk of the degraded steam generator tubes during various accident conditions, including a main steam line break accident.

b. Observations and Findings

No findings were identified.

An NRC senior reactor analyst ~~performed a preliminary~~ is currently working with SCE risk assessment. ~~The risk is composed of two parts: (1) a non-consequential steam line break that induces a steam generator tube rupture, specifically involving the degraded tubes; and (2) an elevated risk of a tube rupture as an initiating event.~~

~~Assuming that a steam line break would cause the degraded steam generator tubes~~ personnel to ~~rupture during a "T/2" exposure period of 6 months yielded a change in the large early release frequency of 4E-6/yr. However, SCE informed the NRC that a calculation is under review that will likely indicate that the differential pressures generated by a steam line break would not be large enough to rupture the degraded tubes as long as operators successfully implemented their emergency procedures. If this is confirmed,~~determine the risk associated with ~~steam line breaks will be significantly reduced.~~

~~Although in this case the degraded condition of the tubes was manifested as a small primary to secondary leak, it is possible that a full-blown rupture could have been the first indication. The baseline core damage frequency of a steam generator tube rupture, according to the SONGS SPAR model, is 4.26E-7/yr. Because of an unmitigated bypass of containment, the large early release frequency is also 4.26E-7/yr. Assuming conservatively that the steam generator tube rupture frequency would at least double, the increase in large early release frequency attributable to the degraded tubes would be approximately 2.13E-7/yr (taking into account a 6-month exposure period).~~

~~It should be noted, this is a preliminary assessment of the risk requiring additional information and inspection to ascertain whether a performance deficiency exists. This does not include or preclude regulatory or enforcement action by the NRC~~the loss of tube integrity for multiple tubes.

10.0 Assess Quality Assurance, Radiological Controls, and Safety Culture Components (Charter Item 10)

a. Inspection Scope

The team reviewed the event, operator actions, management decisions, steam generator eddy current examinations, in-situ pressure testing, and tube plugging and

stabilization activities to determine whether issues related to quality assurance, radiological controls, or safety culture existed.

b. Observations and Findings

No findings were identified.

Region IV radiation protection inspectors reviewed the estimated offsite radiation exposure from the actual steam generator tube leak on Unit 3 steam generator 3E0-88 that occurred on January 31, 2012, including the potential dose consequence to site workers and members of the public. The licensee determined that the Unit 3 steam generator tube leak resulted in a release of gaseous effluents into the public domain, and the primary radionuclides released were argon-41, xenon-133, and xenon-135. The release resulted in an estimated 0.0000452 (4.52 E-5) mrem dose to the public. Inspectors also reviewed design drawings and radiation monitor data, performed plants tours, and confirmed the licensee's use of the offsite dose calculation methodology.

~~c. Conclusions~~

~~The Region IV radiation protection~~The inspectors concluded that the Unit 3 steam generator tube leak was detected by the condenser steam jet air ejector radiation monitor 3RT-7820 as per design. In addition, the radiation monitor 3RT-7820 alarmed and alerted SONGS operators of the steam generator tube leak as required. ~~The inspectors concluded that SCE appropriately accounted for the unplanned release associated with the Unit 3 steam generator tube leak.~~

Form

11.0 Operational impacts from Unit 3 to Unit 2 (Charter Item 11)

a. Inspection Scope

As follow-on of the previous sections, the team reviewed collections of the Mitsubishi documents and presentations, licensee documents and presentations, and NRC independent analysis and assessments to consider the operational impact on Unit 2 based on analysis and data, including eddy current results, regarding the as-found condition of Unit 3. The team compared key observations and overall differences in operational parameters that are common to both units that could affect and possibly limit Unit 2 operation. The team focused on differences in fabrication, manufacturing, operation, and eddy current data results between Units 2 and 3 steam generators.

b. Observations and Findings

No findings were identified.

Based on the review of current Cycle 16 operating data and independent NRC analysis it does not appear that there were any major difference in the thermal hydraulic phenomena at normal full power operation. Since generator physical dimensions and design are identical, the operational parameters are basically the same between the Unit 2 and 3 steam generators; therefore, the hydraulic forcing function that caused tube-to-tube wear and accelerated anti-vibration bar and tube support plate wear should also be same. The initial inspections of the Unit 2 steam generators did not indicate significant wear except at the retainer bars (different mechanism caused this wear). However, subsequent follow up inspections in Unit 2 with a more sensitive probe confirmed the existence of minor tube-to-tube wear in two neighboring tubes but in one of the steam generators. The tube-to-tube wear that was found in Unit 2 was in a similar location as that found in both of the Unit 3 steam generators.

The phenomenon of fluid-elastic instability is a function primarily of two criteria: the fluid velocity forces and the damping capability of the support structure (i.e., the tube support plates, the tubesheet, and the anti-vibration bars). Therefore, if it is determined that the thermal hydraulic forces in the bundle are the same, it can be concluded that the damping forces between the Unit 2 and Unit 3 replacement steam generators must be different. Mitsubishi performed several studies that indicated that gap contact forces in the anti-vibration bars were greater in Unit 2 than in Unit 3. However, with the exception of manufacturing data that shows slight differences, there is not currently a method available to measure the clearances between the anti-vibration bars and the tubes; however, SCE is currently working with AREVA to develop a method to take these measurements.

The tube damage found in Unit 3 is markedly more severe than Unit 2, especially considering that Unit 3 operated only about half the amount of time as Unit 2. This suggests that there is indeed a sizeable difference in the damping capability of the unit steam generators.

There are generally two options to arrest localized damaging thermal hydraulic phenomena in steam generators. The first and preferred option is to plug tubes in the

affected area. The collective plugging tends to relocate and reduce high fluid velocities and void fractions, and has on previous occasions in industry been successful. However, if plugging selected tubes does not provide significant margins adequate to arrest the damage mechanism, thermal hydraulic conditions can be reduced through a reduction in power. Reducing power has several beneficial effects including (1) tends to increase steam pressure, (2) reduces high steam fluid velocities and high void fraction in the bundle, and (3) improves damping. Currently, SCE is still reviewing and developing additional corrective actions to preclude fluid-elastic instability. The NRC has been observing some of the mockup testing being used to qualify additional repair activities.

~~c. Conclusions~~

~~Based on the review of actual operating data and independent thermal-hydraulic modeling analyses, the team determined that there were no major differences in the thermal hydraulic phenomena at normal full-power operation.~~

~~The NRC will review both physical and operational changes that SCE completes as part of the Confirmatory Action Letter inspections.~~

12.0 Mitsubishi Divider Plate Manufacturing and Weld Issues (Mitsubishi Charter Item 2)

a. Inspection Scope

On March 18, 2009, Mitsubishi identified cracking indications in the weld between the divider plate and the channel head of Unit 3 replacement steam generator 3E0-88 (see figure below), after completion of the ASME Section III hydrostatic test on the secondary side. The extent of condition investigation also identified similar cracking indications in Unit 3 replacement steam generator 3E0-89. As discussed in Section 4 of this report, the cause of the cracking was attributed to the air carbon-arc gouging process used to remove the clad weld from the channel head. The team reviewed information associated with the repair of the cracking indications to assess whether the repair activities resulted in relevant differences in design and fabrication that could be considered as contributing factors for the cause of the tube-to-tube wear issue in Unit 3.

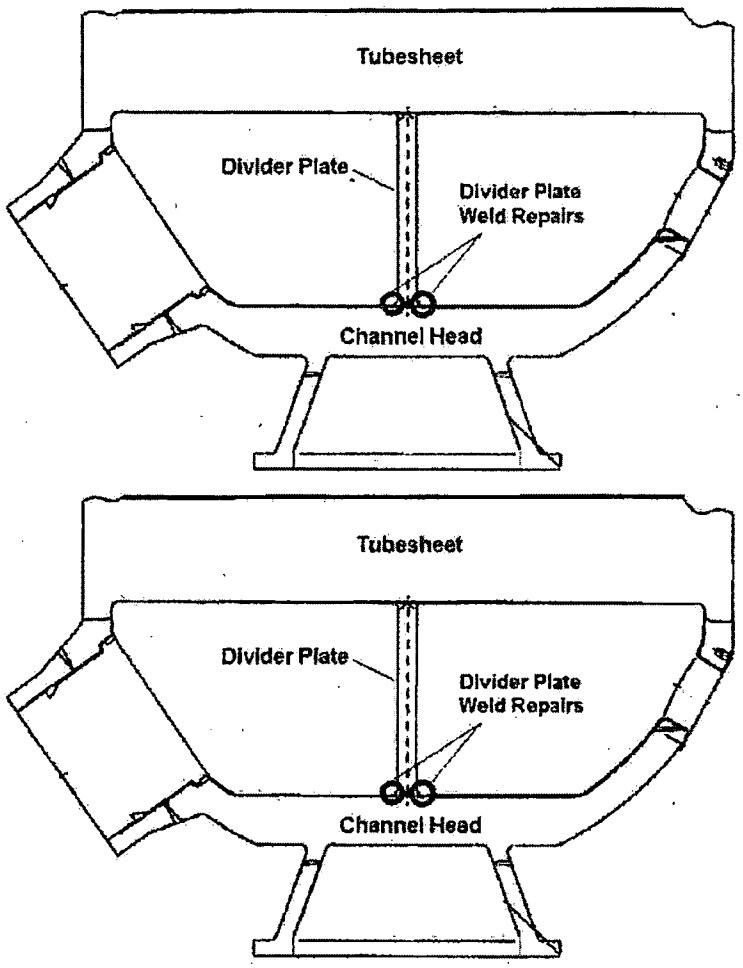


Location of Divider Plate Weld Repairs in Unit 3 Steam Generators (For Illustration Purposes Only)

b. Observations and Findings

No findings were identified.

The team identified an unresolved item for which additional information is required to determine if a performance deficiency exists or if the issue constitutes violation of NRC requirements. The team also identified several observations related to the divider plate weld repairs in Unit 3 replacement steam generators.

1) Introduction: The team identified an Unresolved Item associated with the adequacy of evaluation and controls for the divider plate weld repairs.

Description: The cracking of the divider plate weld in both Unit 3 replacement steam generators required extensive repairs affecting the channel head, divider plate, and tubesheet. Based on interviews with licensee personnel and the review of documentation for the repairs, the team determined that Mitsubishi did not perform a comprehensive evaluation to assess the impact of the divider plate repairs on the integrity of the tube bundle. The team determined that the areas listed below were not considered or evaluated in sufficient depth to identify the potential adverse effects of the planned weld repairs.

- Additional Rotations – The repair activities for the Unit 3 steam generators required additional rotations of the steam generator assembly while these were oriented in the horizontal position. The repairs resulted in approximately 300 additional rotations in each steam generator, which could have affected the configuration of the tube bundle in terms of anti-vibration bar gaps or distortion. The team identified that Mitsubishi did not fully evaluate the impact of additional rotations on the configuration of the steam generators since rotation was considered a normal evolution in the fabrication process.

- Heat Input – The repair process included extensive heat-adding activities such as grinding, flame cutting, and post-weld heat treatment. While these activities were performed in accordance with the construction code of record and an approved repair plan, they could have resulted in thermal expansion and unintended distortion of steam generator components. For example, the channel heads were removed using flame cutting and Mitsubishi's evaluation for the impact of this activity was limited to the base material area in the vicinity of the cut, i.e. the heat affected zone. Mitsubishi did not fully assess the impact this activity could have on the overall configuration of the steam generator in terms of thermal expansion of the tubesheet or distortion.

- Dimensional Checks after Repair – The team identified that Mitsubishi did not perform dimensional verifications (e.g. clearances) of the tube bundle or other secondary side dimensions after the repairs of the Unit 3 steam generators to confirm that critical dimensions were not affected by the repairs.

Additional review by the NRC is required following completion of the licensee's cause evaluation to fully assess how the repair activities affected the Unit 3 replacement steam generators and then determine whether this issue represents a performance

deficiency or constitutes a violation of NRC requirements. This issue is identified as URI 05000362/2012007-09, "Evaluation of the Effects of Divider Plate Weld Repairs in Unit 3 Replacement Steam Generators."

2) Repair Plan: The team noted that Mitsubishi developed a specific plan to conduct the repair of the divider plate weld in both Unit 3 replacement steam generators. The repair plan adequately described the major repair steps and the required implementing procedures. For some of the repair stages, the licensee developed new procedures to prescribe activities outside the normal fabrication sequence. The repair plan consisted of the following major steps:

   - Cutting off the divider plate from the tubesheet by grinding
   - Cutting off the channel head from the tubesheet by flame cutting
   - Cutting the divider plate from the channel head by grinding
   - Removal of the heat affected zone of the channel head bowl edge due to flame cutting
   - Application of weld buildup and post-weld heat treatment on the channel head bowl edge
   - Application of low alloy steel buildup and Alloy 690 butter on the bottom of the channel head for divider plate welding, including required post-weld heat treatment
   - Application of Alloy 690 buildup on the divider plate, including required post-weld heat treatment
   - Welding divider plate to channel head
   - Welding the divider plate to the tubesheet
   - Welding the channel head to the tubesheet
   - Primary side hydrostatic test

3) Differences between Replacement Steam Generators: The team identified the notable differences listed below between Unit 2 and Unit 3 replacement steam generators as a result of the divider plate weld repair activities.

   - Material Class for the Tubesheets – The tubesheet material for both Unit 3 replacement steam generators was reclassified to facilitate the additional post-weld heat treatment required for the repair of the divider plate welds. The tubesheet manufacturer originally certified that the tubesheet material met the requirements of ASME specification SA-508/Grade 3/Class 2, with a post-weld heat treatment time of approximately 15 hours. The repair activities in Unit 3 required additional post-weld heat treatment, which was expected to affect the properties of the tubesheet material to the extent that the mechanical properties would not meet the requirements for SA-508/Grade 3/Class 2 material. Mitsubishi performed mechanical testing on a specimen fabricated from the archive samples that was exposed to 30 hours of post-weld heat treatment and the tests showed that the tubesheet material's tensile strength did not meet the ASME specifications for SA-508/Grade 3/Class 2 material. Mitsubishi performed a reconciliation review to reclassify the material to SA-508/Grade 3/Class 1,

which has a lower tensile strength. The reconciliation included an evaluation of resulting stresses on the tubesheet under design, upset, emergency, faulted, and test conditions using the material properties for SA-508/Class 1 material. The evaluation resulted in acceptable stresses based on the stress limits imposed by the construction code of record. This issue was evaluated by Mitsubishi in the non-conformance report process and Supplier Deviation Request SDR-~~08610041870~~-086 10041870-09086 was submitted to the licensee for review and approval. The licensee approved the reclassification of the tubesheet material.

- Minimum Thickness of the Channel Head Base Metal – The channel heads of both Unit 3 steam generators were removed by flame cutting to facilitate the divider plate weld repairs. The removal and final welding of the channel head resulted in a reduction of the minimum wall thickness of the channel head base metal. The minimum base metal thickness was reduced by 1.18-inches. Mitsubishi evaluated this change in the "Design Report for the Channel Head Region." The reduction in minimum wall thickness was addressed through a reconciliation of stress ratios based on the stress limits imposed by the construction code of record. The analysis demonstrated the structural adequacy of the channel head, primary inlet nozzle, primary outlet nozzle, primary manway, support skirt, and the stud bolts of the primary manway.

- Number of Bolts in the Divider Plate Patch Plates – The original design of the replacement steam generators included a patch plate held in place at the upper corners of the divider plate by three bolts. As a result of the divider plate-to-tubesheet weld removal to support the repair activities, the Unit 3 divider plate patch plates were modified to be held by two bolts instead of the three bolts specified in the original design. Mitsubishi submitted this design change to the licensee for review and approval. Licensee personnel approved the design change as requested.

- Weld Buildup on Channel Head Surfaces – Since the repair of the divider plate welds in Unit 3 steam generators required cutting of the channel head, weld buildup had to be applied on the affected surfaces in order to restore the dimensions to design specifications. Mitsubishi submitted this design change to the licensee for review and approval. Licensee personnel approved the design change as requested.

- Post Weld Heat Treatment – The tubesheet-to-channel head weld area experienced a total of two post-weld heat treatments. Both Unit 3 replacement steam generators received an additional local post-weld heat treatment at approximately 1103° F for approximately 3.5 hrs. Mitsubishi submitted this fabrication process change to the licensee for review and approval. Licensee personnel approved the design change as requested.

- Total of Rotations during Fabrication – The total number of rotations on each steam generator varied as a result of the hydrostatic test results and the repairs on the divider plate welds.

| Steam Generator | Initial Rotations | Additional Rotations for Divider Plate Repairs | Total Rotations |
|---|---|---|---|
| Unit 2 E0-89 | 520 | 0 | 520 |
| Unit 2 E0-88 | 510 | 0 | 510 |
| Unit 3 E0-89 | 470 | 340 | 810 |
| Unit 3 E0-88 | 440 | 320 | 760 |

~~c. Conclusions~~

~~The team identified one unresolved item associated with the repair work done on the Unit 3 divider plate. The team did not identify any connection between the repairs of the divider plate and the unexpected tube-to-tube wear.~~

13.0 Office of Nuclear Reactor Regulation (NRR) Review of SONGS 50.59 Evaluation

a. Inspection Scope

The NRR technical specialist reviewed all of the design changes associated with the replacement steam generators to determine whether the changes to the facility or procedures, as described in the updated final safety analysis report, had been reviewed and documented in accordance with 10 CFR 50.59 requirements. The technical specialist reviewed the various information used by SCE to review the changes being made to the replacement steam generators, including calculations, analyses, design change documentation, procedures, the updated final safety analysis report, the technical specifications, and plant drawings. The evaluation process used by the technical specialist included determining if the design changes to the replacement steam generators were a change to the facility or procedures as described in the updated final safety analysis report or a test or experiment not described in the updated final safety analysis report. The technical specialist also verified that safety issues related to the changes were resolved. The technical specialist compared the safety evaluations and supporting documents to the guidance and methods provided in NEI 96-07, "Guidelines for 10 CFR 50.59 Implementation," Revision 1, as endorsed by NRC Regulatory Guide 1.187, "Guidance for Implementation of 10 CFR 50.59, Changes, Tests, and Experiments," to determine the adequacy of the 10 CFR 50.59 evaluations.

b. Observations and Findings

No findings were identified

The NRR technical specialist identified one unresolved item for which additional information is required to determine if performance deficiencies exist or if the issues constitute violations of NRC requirements.

(1) Introduction: The NRR technical specialist reviewed SCE's 10 CFR 50.59 evaluation contained in Engineering Change Packages 800071702 and 800071703 for the Unit 2 and Unit 3 replacement steam generators, respectively, in which SCE determined that the impact of the replacement steam generators on the current licensing basis and any need for NRC approval as required by 10 CFR 50.59.

(2) Description: The NRR technical specialist reviewed the SCE's 10 CFR 50.59 evaluation against 10 CFR 50.59(c)(2)(viii) which requires that licensees obtain a license amendment pursuant to 10 CFR 50.90 prior to implementing a proposed change if the change would result in a departure from a method of evaluation described in the final safety analysis report (as updated) used in establishing the design bases or in the safety analyses. Industry guidance NEI 96-07, Revision 1, Section 3.10, "Methods of Evaluation," states, "Definition: Methods of evaluation means the calculational framework used for evaluating behavior or response of the facility or structures, systems, and components." Regulation 10 CFR 50.59 a(2), states, "*Departure from a method of evaluation described in the FSAR (as updated) used in establishing the design bases or in the safety analyses* means (i) changing any of the elements of the method described in the FSAR (as updated) unless the results of the analysis are conservative or essentially the same; or (ii) changing from a method described in the FSAR to another method unless that method has been approved by NRC for the intended application." Regulation 10 CFR 50.59(d)(1) requires that the licensee maintain records of changes in the facility that "includes a written evaluation which provides the bases for the determination that the change, test, or experiment does not require a license amendment...." The technical specialist evaluated SCE's bases for determining that the changes would not result in the departure from the method of evaluation used in establishing the design bases or in the safety analyses. Specifically, the technical specialist evaluated whether the changes involved:

(a) changing of any of the elements of the method described in the updated final safety analysis report, which consistent with 10 CFR 50.59 a(2)(i) would be justified by demonstrating that the results of the analysis are conservative or essentially the same; or

(b) changing from a method described in the updated final safety analysis report to another method, which consistent with 10 CFR 50.59 a(2)(ii) would be justified by demonstrating that method has been approved by NRC for the intended application.

The NRR technical specialist reviewed SCE's 10 CFR 50.59 evaluation and found two instances that failed to adequately address whether the change involved a departure of the method of evaluation described in the updated final safety analysis report.

(a) Use of ABAQUS instead of ANSYS: Updated Final Safety Analysis Report Sections 3.9.1.2.2.1.11 and 3.9.1.2.2.2.3 were revised to reflect that the SONGS Unit 2 and 3 original steam generators stress analyses for reactor coolant system structural integrity utilized the ANSYS computer program, whereas the replacement steam generators analyses utilized the ABAQUS computer program. The SCE's 50.59 evaluation incorrectly determined that using the ABAQUS instead of ANSYS was a change to an element of the method described in the updated final safety analysis report did not constitute changing from a method described in the updated final safety analysis report to another method, and as such, did not mention whether ABAQUS has been approved by the NRC for this application.

(b) Use of ANSYS instead of STRUDL and ANSYS: Updated Final Safety Analysis Report Section 5.4.2.3.1.3 was revised to reflect that the SONGS Unit 2 and 3 evaluation of tube stress under loss of coolant accident conditions for the original steam generators consisted of a two-step process utilizing the STRUDL and ANSYS computer programs to calculate displacement histories and tube stresses, respectively, while the corresponding replacement steam generators analysis determined tube stresses from blowdown forces using only the ANSYS computer program. While SCE's 50.59 evaluation correctly considered this a change from a method described in the FSAR to another method, the 50.59 evaluation did not mention whether the method has been approved by NRC for this application.

~~This issue is identified as URI 05000362/2012007-10, "Evaluation of Departure of Method of Evaluation for 10 CFR 50.59 Processes."~~

~~c. Conclusions~~

~~The NRR technical specialist identified one unresolved item associated with a change in the method of evaluation as described in the updated final safety analysis report.~~ Additional review and followup will be required to review the departure of the method of evaluation used during the stress analysis calculations associated with the replacement steam generators and then determine whether this issue represents a performance deficiency or constitutes a violation of NRC requirements. This issue is identified as URI 05000362/2012007-10, "Evaluation of Departure of Method of Evaluation for 10 CFR 50.59 Processes."~~.~~

## 14.0 Exit Meeting Summary

On June 18, 2012, the NRC held a public meeting and presented the inspection results to Mr. P. Dietrich, Senior Vice President and Chief Nuclear Officer, and other members of the staff, who acknowledged the findings. Proprietary information was provided to the team and all proprietary information was returned to SCE.

## SUPPLEMENTAL INFORMATION
## KEY POINTS OF CONTACT

Licensee Personnel

P. Dietrich, Senior Vice President and Chief Nuclear Officer
R. Litzinger, President, SCE
D. Bauder, Vice President and Station Manager
T. Palmisano, Vice President of Engineering, Projects and Site Support
T. McCool, Plant Manager
T. Yackle, Assistant Plant Manager
D. Yarbrough, Director, of Operations
R. Corbett, Director, of Performance Improvement
O. Flores, Director, of Nuclear Oversight
R. St. Onge, Director, of Nuclear Regulatory Affairs
B. Winn, Director, of Nuclear Financial Management
E. Avella, Director, of Project Management
M. Coveney, Director, of Nuclear Leadership
M. Stevens, ~~Technical Specialist~~Title needed, Nuclear Regulatory Affairs
C. Cates, ~~Manager,~~ Nuclear Safety Culture and Site Recovery Manager
M. Malzahn, ~~Engineer,~~ Project Management Engineer
C. Harberts, ~~Manager,~~ Steam Generator Replacement Project Manager
M. Mihalik, Senior Engineer, Project Management Organization
R. McWey, ~~Manager,~~ Nuclear Oversight Manager
M. Pawlaczyk, ~~Technical Specialist,~~ Nuclear Regulatory Affairs Technical Specialist
J. Peattie, ~~Manager,~~ Maintenance Manager
R. Treadway, ~~Manager,~~ Nuclear Regulatory Affairs Manager
B. Olech, Consulting Engineer, Edison
~~J~~D. Brabec, Project Manager, Steam Generator Recovery Program
D. Calhoun, Senior Engineer, Design Engineering Organization, Edison

Mitsubishi Personnel

H. Kaguchi, Mitsubishi Heavy Industries, Director, Component Designing Department
I. Otake, Mitsubishi Heavy Industries, Deputy Chief Engineer, Quality Assurance Department
T. Tsuruta, Mitsubishi Heavy Industries, Engineer, Quality Assurance Department
T. Inoue, Mitsubishi Heavy Industries, Deputy Director, Plant Designing Department
H. Hirano, Mitsubishi Heavy Industries, Project Manager, Overseas Project, Component Designing Department
R. Bywater, Mitsubishi Nuclear Energy Systems, COLA ~~Project~~Licensing Manager
F. Gillespie, ~~Mitsubishi Nuclear Energy Systems, Senior Vice President~~
~~R. Godley, Mitsubishi Nuclear Energy Systems, Deputy General Manager, Licensing Support~~
R. Godley,

Other Contractor Personnel

R. Walker, MPR Consultant

M. Short, Consultant
~~B. Marlow, AREVA, Vice President, Key Accounts~~
~~M. Street, AREVA, Manager, Primary Component Projects and Warranty Support~~
~~M. Miller, AREVA, Advisory~~Bruce ?, Areva, TITLE NEEDED
??, ATHOS Engineer, NAME AND TITLE NEEDED
~~S. Claunch, AREVA, Advisory Engineer~~

Comn
contra
Form

NRC Personnel
T. Blount, Deputy Division Director, Division of Reactor Safety
R. Lantz, Branch Chief, Projects Branch D
G. Warnick, Senior Resident Inspector

## LIST OF ITEMS OPENED, CLOSED AND DISCUSSED

Opened

| | | |
|---|---|---|
| 05000362/2012007-01 | URI | Adequacy of the Trip/Transient and Event Review Procedure (Section 1) |
| 05000362/2012007-02 | URI | Evaluation of Unit 3 Vibration and Loose Parts Monitoring System Alarms (Section 3) |
| 05000362/2012007-03 | URI | Evaluation of Retainer Bars Vibration during the Original Design of the Replacement Steam Generators (Section 4 |
| 05000362/2012007-04 | URI | Evaluation of Changes in Dimensional Controls during the Fabrication of Unit 2 and Unit 3 Replacement Steam Generators (Section 4) |
| 05000362/2012007-05 | URI | Shipping Requirements not in Accordance with Industry Standards (Section 7) |
| 05000362/2012007-06 | URI | Shipping Requirements not in Accordance with Design and Fabrication Specifications (Section 7) |
| 05000362/2012007-07 | URI | Unit 3 Steam Generator ~~3E0-88~~E088 Stresses Related to Handling (Section 7) |
| 05000362/2012007-08 | URI | Non-Conservative Thermal-Hydraulic Model Results (Section 8) |
| 05000362/2012007-09 | URI | Evaluation of the Effects of Divider Plate Weld Repairs in Unit 3 Replacement Steam Generators (Section 12) |
| 05000362/2012007-10 | URI | Evaluation of Departure of Method of Evaluation for 10-CFR 50.59 Processes (Section 13) |

Closed

None

Discussed

None

## LIST OF DOCUMENTS REVIEWED

AUDITS/SELF-ASSESSMENTS/QUALITY CONTROL DRAWINGS

SONGS DOCUMENTS

| Number | Title | Revision/Date |
|---|---|---|
| MHI-1-06 | Southern California Audit of Mitsubishi Heavy Industries | June 16, 2006 |
| MHI-1-09 | Southern California Audit of Mitsubishi Heavy Industries | April 27, 2009 |
| MHI-2-04 | Southern California Audit of Mitsubishi Heavy Industries | December 14, 2004 |
| SCES-007-10 | Procurement and Material Control Program Audit | September 14, 2010 |
| MHI-01-04 | Evaluation and Review of Contractor, Consultant, Utility or Licensee Audit Report | September 24, 2004 |
| | Status of Southern California Edison (SCE) Corrective Action Request (CAR) Nos. S-1918 and S-1932 Closure | March 23, 2007 |
| | Southern California Edison (SCE) Corrective Action Request (CAR) No. S-1991, Supplier Stop Work Order (SSWO) No. SSWO-001-08 | 1 |
| SO123-XV-50 | Corrective Action Program | 25 |
| | RSG-SCE/MHI-06-2233 – Southern California Edison (SCE) Corrective Action Request (CAR) No. S-1882 Closure | May 3, 2006 |
| | RSG-SCE/MHI-06-1916 - Southern California Edison (SCE) Corrective Action Request, (CAR) No. S-1906 Closure | February 22, 2006 |
| | Southern California Edison (SCE) Audit No. MHI-1-06 and Corrective Action Request (CAR) Nos. S-1915, S-1916, S-1917, and S-1918 | January 31, 2008 |
| AR# 040901345 | Qualification Letter | September 24, 2004 |

| Number | Title | Revision/Date |
|---|---|---|
| AR#0503014 58 | Qualification Letter | March 23, 2005 |
| AR#0605001 34 | Qualification Letter | May 10, 2006 |
| 6C294014 | Edison Material Supply Procurement Order for Mitsubishi Heavy Industries | September 28, 2004 |
| SO23-617-01 | Specifications for design and fabrication of RSG for Unit 2 and Unit 3 | 4 |
| SO23-617-02 | Specifications for Baseline Pre-Service Examination on Tubing for RSG | 1 |
| SO23-617-03 | Replacement Steam Generator Installation Unit 2 and 3 | 4 |
| SO23-617-04 | Specifications for the Transportation of Replacement Steam Generators | 1 |
| TL C001783 | San Onofre Topical Report Quality Assurance Manual | 64 |
| TL C001782 | San Onofre 2&3 FSAR Updated Quality Assurance Program Topical Report SCE-1 | 15 |
| | SONGS Unit 2 & 3 Replacement Steam Generator QA/QC Manufacturing Oversight Plan Japan Steel Works | 0 |
| | SONGS Unit 2 & 3 Replacement Steam Generator QA/QC Oversight Plan | 1 |
| | SONGS Unit 2 & 3 Replacement Steam Generator Receipt Inspection Plan | 0 |
| SGR-A10183 | Replacement Steam Generator Resident Oversight Plan | 1 |
| SGR-A10159 | San Onofre Nuclear Generating Station Unit 2 & 3 Steam Generator Replacement Project Plan | 1 |
| MHI-1SV-05 | Source Verification Report of MHI/Japan Steel Work | March 15, 2005 |
| MHI-1SV-06 | Source Verification Report of MHI/Japan Steel Work | February 7, 2006 |
| MHI-1SV-07 | Source Verification Report of MHI | March 20, 2007 |
| MHI-1SV-08 | Source Verification Report of MHI/Japan Steel Work | August 29, 2008 |
| MHI-2SV-05 | Source Verification Report of MHI | April 1, 2005 |

| Number | Title | Revision/Date |
|---|---|---|
| MHI-2SV-06 | Source Verification Report of MHI/Japan Steel Work | March 24, 2006 |
| MHI-2SV-07 | Source Verification Report of MHI | November 2, 2007 |
| MHI-3SV-05 | Source Verification Report of MHI/Japan Steel Work | May 3, 2005 |
| MHI-3SV-06 | Source Verification Report of MHI | May 3, 2006 |
| MHI-4SV-05 | Source Verification Report of MHI/Japan Steel Work | May 4, 2005 |
| MHI-4SV-06 | Source Verification Report of MHI/Japan Steel Work | May 23, 2006 |
| MHI-5SV-05 | Source Verification Report of MHI/Japan Steel Work | June 10, 2005 |
| MHI-5SV-06 | Source Verification Report of MHI | September 26, 2006 |
| MHI-6SV-05 | Source Verification Report of MHI | July 1, 2005 |
| MHI-6SV-06 | Source Verification Report of MHI | January 24, 2007 |
| MHI-7SV-05 | Source Verification Report of MHI/Japan Steel Work | August 12, 2005 |
| MHI-7SV-06 | Source Verification Report of MHI | January 16, 2007 |
| MHI-8SV-05 | Source Verification Report of MHI | March 26, 2007 |
| MHI-8SV-06 | Source Verification Report of MHI | Date? |
| MHI-9SV-05 | Source Verification Report of MHI/Japan Steel Work | October 13, 2005 |
| MHI-10SV-05 | Source Evaluation Report of MHI | February 8, 2006 |
| MHI-11SV-05 | Source Verification Report of MHI/Japan Steel Work | December 21, 2005 |
| SO123-XII-18.19 | Nuclear Oversight Procedure Supplier Audits | 10 |
| SO123-XII-7.12 | Nuclear Oversight Procedure Source Verification | 5 |

CALCULATIONS

| Number | Title | Revision |
|---|---|---|
| SO23-617-1-C275 | Design Report of the Channel Head Region | 6 |
| SO23-617-1-C514 | Design for RCS Flow Rate | 1 |
| SO23-617-1-M1562 | Retainer Bar Tube Wear Report | 0 |

CORRECTIVE ACTION REPORTS

| | | | | |
|---|---|---|---|---|
| | | | | |

DESIGN BASIS DOCUMENTS

| Number | Title | Revision |
|---|---|---|
| SO23-617-01 | Specification for Design and Fabrication of RSGs for Unit 2 and Unit 3 | 4 |
| SO23-617-1-M1492 | As-Built Reconciliation Report for Unit 3 | 2 |
| L5-04GA428 | Design of Anti-Vibration Bar | 5 |
| DBD-SO23-365 | Design Basis for Steam Generator and Secondary Side | 10 |

DESIGN CHANGE NOTIFICATIONS/SUPPLIER DEVIATION REQUESTS

| Number | Title | Revision |
|---|---|---|
| NECP 800071703 | Engineering Change Package, "Replacement Steam Generators" | 0 |
| SDR-007 43366-05007 | Circulation Ratio for RSG | 0 |
| SDR-037 43366-06037 | Tube-to-Tube Clearance in 2A RSG | 0 |
| SDR-047 43366-07047 | Tool Mark in 3A Tubesheet | 0 |
| SDR-050 43366-07050 | Tool Mark in 3B Tubesheet | 0 |

| Number | Title | Revision |
|---|---|---|
| SDR-051 43366-07051 | Unit 2A Lower Shell Assembly | 0 |
| SDR-053 43366-07053 | Unit 2B Lower Shell Assembly | 0 |
| SDR-059 43366-08059 | Unit 3B Lower Shell Assembly | 0 |
| SDR-064 43366-08064 | Axial Length of AVB | 0 |
| SDR-079 43366-08079 | Statistical Size of Tube-to-AVB Gap | 0 |
| SDR-082 43366-09082 | Divider Plate Repair of Unit 3 RSGs | 0 |
| SDR-086 10041870-09086 | Specifications for Unit 3 RSG Tube Material | 0 |
| SDR-098 10041870-10098 | Overall Height of 3A RSG | 0 |
| SDR-099 10041870-10099 | Perpendicularity and Parallelism of 3A RSG Key Bracket | 0 |
| SDR-100 10041870-10100 | Parallelism of 3B RSG Key Bracket | 0 |

DRAWINGS

| Number | Title | Revision |
|---|---|---|
| SO23-617-1-D103 | Design Drawing – Component and Outline Drawing 1 / 3 | 5 |
| SO23-617-1-D104 | Design Drawing – Component and Outline Drawing 1 / 3 | 2 |
| SO23-617-1-D106 | Design Drawing Tubesheet and Extension Ring 1 of 3 | 12 |
| SO23-617-1-D107 | Design Drawing Tubesheet and Extension Ring 2 of 3 | 5 |
| SO23-617-1-D108 | Design Drawing Tubesheet and Extension Ring 3 of 3 | 8 |
| | | |
| SO23-617-1-D109 | Design Drawing Lower Shell, Middle Shell, Transition Cone and Upper Shell Stub 1 of 4 | 5 |
| SO23-617-1-D110 | Design Drawing Lower Shell, Middle Shell, Transition Cone and Upper Shell Stub 2 of 4 | 7 |

| Number | Title | Revision |
|---|---|---|
| SO23-617-1-D111 | Design Drawing Lower Shell, Middle Shell, Transition Cone and Upper Shell Stub 3 of 4 | 4 |
| SO23-617-1-D112 | Design Drawing Lower Shell, Middle Shell, Transition Cone and Upper Shell Stub 4 of 4 | 4 |
| SO23-617-1-D113 | Design Drawing Channel Head 1 of 4 | 9 |
| SO23-617-1-D113 | Design Drawing Channel Head 1 of 4 | 15 |
| SO23-617-1-D114 | Design Drawing Channel Head 2 of 4 | 13 |
| SO23-617-1-D115 | Design Drawing Channel Head 3 of 4 | 5 |
| SO23-617-1-D116 | Design Drawing Tube Bundle 1 of 3 | 1 |
| SO23-617-1-D117 | Design Drawing Tube Bundle 2 of 3 | 1 |
| SO23-617-1-D118 | Design Drawing Tube Bundle 3 of 3 | 3 |
| SO23-617-1-D159 | Design Drawing Upper Shell, Upper Head Ring and Upper Head Top 1 of 4 | 7 |
| SO23-617-1-D160 | Design Drawing Upper Shell, Upper Head Ring and Upper Head Top 2 of 4 | 2 |
| SO23-617-1-D161 | Design Drawing Upper Shell, Upper Head Ring and Upper Head Top 3 of 4 | 4 |
| SO23-617-1-D162 | Design Drawing Upper Shell, Upper Head Ring and Upper Head Top 4 of 4 | 2 |
| SO23-617-1-D210 | Design Drawing of Moisture Separator Assembly 1 of 6 | 10 |
| SO23-617-1-D211 | Design Drawing of Moisture Separator Assembly 2 of 6 | 10 |
| SO23-617-1-D212 | Design Drawing of Moisture Separator Assembly 3 of 6 | 5 |
| SO23-617-1-D274 | Design Drawing Channel Head 4 of 4 | 4 |
| SO23-617-1-D294 | Design Drawing Tube Support Plate Assembly 1 of 3 | 3 |
| SO23-617-1-D295 | Design Drawing Tube Support Plate Assembly 2 of 3 | 4 |
| SO23-617-1-D296 | Design Drawing Tube Support Plate Assembly 3 of 3 | 5 |
| SO23-617-1-D383 | Design Drawing – Critical Field Interface Dimensions and Major Tolerances 1 / 3 | 7 |
| SO23-617-1-D391 | Design Drawing Wrapper Assembly 1 of 5 | 5 |
| SO23-617-1-D392 | Design Drawing Wrapper Assembly 2 of 5 | 0 |

| Number | Title | Revision |
|---|---|---|
| SO23-617-1-D393 | Design Drawing Wrapper Assembly 3 of 5 | 2 |
| SO23-617-1-D394 | Design Drawing Wrapper Assembly 4 of 5 | 2 |
| SO23-617-1-D395 | Design Drawing Wrapper Assembly 5 of 5 | 3 |
| SO23-617-1-D494 | Design Drawing – Divider Plate1 / 2 | 10 |
| SO23-617-1-D495 | Design Drawing – Divider Plate 2 / 2 | 6 |
| SO23-617-1-D507 | Design Drawing Anti-Vibration Bar Assembly 1 of 9 | 4 |
| SO23-617-1-D508 | Design Drawing Anti-Vibration Bar Assembly 2 of 9 | 2 |
| SO23-617-1-D509 | Design Drawing Anti-Vibration Bar Assembly 3 of 9 | 0 |
| SO23-617-1-D539 | Design Drawing Anti-Vibration Bar Assembly 4 of 9 | 0 |
| SO23-617-1-D540 | Design Drawing Anti-Vibration Bar Assembly 5 of 9 | 2 |
| SO23-617-1-D541 | Design Drawing Anti-Vibration Bar Assembly 6 of 9 | 2 |
| SO23-617-1-D542 | Design Drawing Anti-Vibration Bar Assembly 7 of 9 | 8 |
| SO23-617-1-D543 | Design Drawing Anti-Vibration Bar Assembly 8 of 9 | 3 |
| SO23-617-1-D544 | Design Drawing Anti-Vibration Bar Assembly 9 of 9 | 1 |
| SO23-617-1-D680 | Design Drawing – Tubing Expansion and Seal Welding | 3 |
| SO23-617-1-D1099 | Fabrication Drawing – General Shipping Arrangement [SON 2E89; SON 2E882E0-88] | 2 |
| SO23-617-1-D1100 | Fabrication Drawing – General Shipping Arrangement [SON 3E89; SON 3E88] | 2 |
| SO23-617-1-D1488 | Fabrication Drawing – Temporary Attachment For Channel Head and Tubesheet Welding (Unit 3) | 0 |
| L5-04FW111 | Detail of AVB 1 of 5 (Center Narrow AVB) | 6 |
| L5-04FW112 | Detail of AVB 2 of 5 (Center Wide AVB) | 2 |
| L5-04FW113 | Detail of AVB 3 of 5 (Side Narrow AVB) | 2 |
| L5-04FW114 | Detail of AVB 4 of 5 (Side Wide AVB for Hot Side) | 2 |
| L5-04FW115 | Detail of AVB 5 of 5 (Side Wide AVB for Cold Side) | 2 |

ENGINEERING REPORTS (ER)

| Number | Title | Revision |
|---|---|---|
| SO23-617-1-M1401 | Divider Plate Weld Joint Separation Root Cause Evaluation Report | 4 |
| SO23-617-1-C157 | Evaluation of Tube Vibration | 3 |
| SO23-617-1-C749 | Analytical Report of AVB Assembly | 4 |
| SO23-617-1-M1265 | Summary Design Report | 8 |
| SO23-617-1-M1231 | Performance Analysis Report | 3 |
| SO23-617-1-C682 | Analytical Report of Separator and Dryer Assemblies | 7 |
| SO23-617-01R3 | Design Report of Tube | 5 |

MHI DOCUMENTS

| Number | Title | Revision/Date |
|---|---|---|
| UHQ-08N013 | MHI Survey Report of Sumitomo Metal Industries, Limited. Steel Tube Works | 0 |
| UHQ-11N010 | MHI Survey Report of Sumitomo Metal Industries, Limited. Steel Tube Works | 0 |
| UHQ-05N015 | MHI Survey Report of Sumitomo Metal Industries, Limited. Pipe & Tube Works | 1 |
| UHQ-08N014 | MHI Survey Report of Sumitomo Metal Industries, Limited. Steel Tube Works | 0 |
| UHQ-11S005 | MHI Survey Report of Sumitomo Metal Industries, Limited. Steel Tube Works | 0 |
| UHQ-05N019 | MHI Survey Report of Sumitomo Metal Industries, Limited. Steel Tube Works | 0 |
| BUH94-06 | Quality Assurance Survey/Audit Procedure of Vendors | 6 |
| BUH94-06 | Vendor Evaluation Procedure | 9 |
| BUH94-06 | Vendor Evaluation Procedure | 13 |
| 5ZDD94-06 | Vendor Evaluation Procedure | 1 |

| Number | Title | Revision/Date |
|---|---|---|
| UHQ-08N013 | MHI Survey Report of Sumitomo Metal Industries, Limited. Steel Tube Works | 0 |
| UHW-68-06A002 | MHI Evaluation on Corrective Action Established by Sumitomo Metal Industries Limited | 0 |
| UHNR-SON-RSG-06N005 | Nonconformance Report for Alloy 690 SG Tubing for SONGS Unit 2 | 4 |
| UHQ-07N004 | MHI Audit Report of Sumitomo Metal Industries, Limited. Steel Tube Woks | 1 |
| UHCP-70N004 | Corrective Action Plan Followup Report | 0 |
| UES-20100006 | Qualified Vendor List | 18 |
| L5-04GB004 | Submittal Document Control List | 53 |
| UGNR-SON2-RSG-020 | Nonconformance Report Channel head for Unit 2A | February 2, 2006 |
| UGNR-SON2-RSG-038 | Nonconformance Report Unacceptable local diameter change of tube holes | June 2, 2006 |
| UGNR-SON2-RSG-052 | Nonconformance Report Unacceptable length of 10 tube hole pitch of tube support plate #3 | September 11, 2006 |
| UGNR-SON2-RSG-062 | Nonconformance Report Incorrect end caps of AVB 2ASN154C and AVB 2ASN164C | December 1, 2006 |
| UGNR-SON2-RSG-075 | Nonconformance Report Unacceptable gaps between tubes and AVBs | March 24, 2007 |
| UGNR-SON2-RSG-091 | Nonconformance Report Incorrect machining for steam flow limiting device | September 4, 2007 |
| UGNR-SON2-RSG-096 | Nonconformance Report Unacceptable dimensions for steam flow limiting device of Unit 2A | October 23, 2007 |
| UGNR-SON3-RSG-009 | Nonconformance Report Unacceptable local diameter change of tube holes | May 10, 2007 |
| UGNR-SON3-RSG-024 | Nonconformance Report Some gaps between tubes and AVBs are larger than the criterion | November 30, 2007 |

| Number | Title | Revision/Date |
|---|---|---|
| UHQ-08N013 | MHI Survey Report of Sumitomo Metal Industries, Limited. Steel Tube Works | 0 |
| UGNR-SON3-RSG-049 | Nonconformance Report Out of tolerance on hand holes inside diameter | March 2, 2009 |
| UGNR-SON3-RSG-055 | Nonconformance Report Divider plate metal repair butter/weld crack after post bake | September 11, 2009 |
| UGNR-SON-RSG-06N002 | Nonconformance Report Feedwater nozzle for unit 2 ID: 21721-101 | February 2, 2006 |
| ~~UGS-L5-050043~~ | ~~Anti-Vibration Bar Inspection Procedure (Individual Bar)~~ | ~~1~~ |
| ~~UGS-L5-050045~~ | ~~Inspection Procedure for Tube and Anti-Vibration Bar Inspection~~ | ~~10~~ |
| B91U-N0001 | Mitsubishi Heavy Industries Ltd Kobe Shipyard & Machinery Works Quality Assurance Manual (Nuclear) | 39 |
| UES-69-040038 | Mitsubishi Heavy Industries Ltd Kobe Shipyard & Machinery Works Quality Assurance Program Manual (Project Addenda) | 15 |
| UHH-G06A97 | Stop Work Order for FMA (Final Mill Annealing) on Manufacturing of Heat Transfer Tubing for SONGS RSG | 0 |

MISCELLANEOUS DOCUMENTS

| ~~Number~~ | ~~Title~~ | ~~Revision/Date~~ |
|---|---|---|
| AR 060500134 | Action Request: Qualification Letter | |
| AR 040901345 | Action Request: Qualification Letter | |
| AR 050301458 | Action Request: Qualification Letter | |
| | Setpoint Transmittal Unit 2 and 3 Gas Monitors | December 6, 2010 |
| | SONGS Unit 3 Chemistry/Operations Logs – SG Event Timeline | January 31, 2012 |
| | Radiation Monitor 3RT-7870 Setpoints | May 31, 2011 |
| | Radiation Monitor 3RT-7818A Setpoints | May 31, 2011 |

| ~~Number~~ | ~~Title~~ | ~~Revision/Date~~ |
|---|---|---|
| 2G-030-3 | Condenser Air Ejector Continuous Gas Post-Release Report | January 31, 2012 |
| SO23-617-01 | Specification for Design and Fabrication of RSGs for Unit 2 and Unit 3 | 4 |
| SO23-617-02 | Specification for Baseline Pre-Service Examination (PSE) on Tubing for Replacement Steam Generators | 1 |
| | Updated Final Safety Analysis Report for San Onofre Units 2 and 3 | April 2009 |
| SO23-617-1-M29 | Design Review Item List | 9 |
| DA 2002-92 | Dominion Audit of Mitsubishi Heavy Industries | June 9, 2002 |
| V03-008 | Omaha Public Power District Audit of Mitsubishi Heavy Industries | July 18, 2003 |
| 99901030/2008-201 | Mitsubishi Heavy Industries (MHI), Kobe, Japan, inspection of selected portions of MHI's Quality Assurance (QA) program, and 10 CFR Part 21 program | July 18, 2008 |
| 99901384/2009-201 | Sumitomo Metal Industries, Limited, Higashi-Mukojima Amagasaki, Japan, inspection of selected portions of Sumitomo's quality assurance (QA) program and 10 CFR Part 21 program | November 13, 2009 |
| SMI-AQA-9041 | Reply to Notice of Nonconformance(99901 384/2009-201-01) | 0 |
| ~~NRC Inspection Report 99901030/2008-201~~ | ~~Inspection of Selected Portions of MHI's Quality Assurance and 10 CFR Part 21 Programs~~ | ~~July 18, 2008~~ |

MODIFICATIONS

| Number | Title | Date |
|---|---|---|
| Engineering Change Package NECP 800071702 | 50.59 Screening and Evaluation for Replacement Steam Generators – Unit 2 | July 31, 2009 |

| | | |
|---|---|---|
| Engineering Change Package NECP 800071703 | 50.59 Screening and Evaluation for Replacement Steam Generators – Unit 3 | July 31, 2009 |

NUCLEAR NOTIFICATIONS

| | | | | |
|---|---|---|---|---|
| 201907899 | | | | |

*NN's issued as a result of inspection activities.

PROCEDURES

| Number | Title | Revision |
|---|---|---|
| SO123-ODCM | Offsite Dose Calculation Manual | 0 |
| SO123-0-47 | Notification and Reporting of Significant Events | 18 |
| SO123-III-5.9 | Manual Effluent Gaseous Release Permits, Setpoint Calculations, and Monitor Calibration Constant Evaluations | 8 |
| SO123-VIII-1 | EPIP: Recognition and Classification of Emergencies | 36 |
| SD-SO23-310 | System Description - Turbine Building Sampling System | 9 |
| SD-SO23-690 | System Description – Steam Generator E088/089 | 18 |
| SD-SO23-690 | System Description – Steam Generator Radiation Monitors RE-6753 & RE-6759 | 18 |
| SD-SO23-690 | System Description – Condenser Air Ejector Wide Range Radiation Monitors RE-7870A/B & Low Range Radiation Monitors RE-7818 | 18 |
| SB-SO-FB-006 | Divider Plate Weld Joint Repair Procedure | 10 |
| SB-SO-HT-1001 | Post Weld Heat Treatment Procedure | 22 |
| SO123-XXXII-2.27 | Supplier Deviation Requests (SDRs) | 5 |
| SO23-617-1-D104 | Design Drawing - Component and Outline Drawing 2/3 | 2 |
| SO23-617-1-D1099 | General Shipment Arrangement SON-2A | 4 |
| SO23-617-1-M1246 | Hydrostatic Test Procedure | 3 |
| SO23-617-1-M139 | Post Weld Heat Treatment Procedure | 21 |

| | | |
|---|---|---|
| SO23-617-1-M1395 | Divider Plate Weld Joint Procedure | 9 |
| SO23-617-1-M1398 | Divider Plate Weld Joint Repair Plan | 12 |
| SO23-617-1-M1461 | Additional Post Weld Heat Treatment Procedure for Divider Plate Weld Joint Repair | 0 |
| SO23-617-1-M616 | Tubesheet Drilling Procedure | 9 |
| SO23-617-1-M733 | Helium Leak Test Procedure of the Tube to Tubesheet Welds (High Pressure) | 5 |
| SO23-617-1-M735 | Helium Leak Test Procedure of the Tube to Tubesheet Welds (Low Pressure) | 3 |
| SO23-617-1-M819 | AVB Structure Assembly Procedure | 8 |
| SO23-617-1-M820 | Tubing and AVB Installation Procedure | 6 |
| SO23-617-1-M821 | Anti-Vibration Bar Inspection Procedure (After Assembly) | 5 |
| ~~SO123-XV-50~~ | ~~Corrective Action Program~~ | ~~25~~ |
| ~~SO123-XII-18.19~~UGS-L5-050043 | ~~Nuclear Oversight~~Anti-Vibration Bar Inspection Procedure ~~Supplier Audits~~(Individual Bar) | ~~10~~1 |
| ~~SO123-XII-7.12~~UGS-L5-050045 | ~~Nuclear Oversight~~Inspection Procedure ~~Source Verification~~for Tube and Anti-Vibration Bar Inspection | ~~5~~10 |

VENDOR DOCUMENTS

| Number | Title | Revision/Date |
|---|---|---|
| 51-9176667-001 | Engineering Information Record, "SONGS 2C17 & 3C17 Steam Generator Degradation Assessment" | 1 |
| UGNR-SON2-RSG-012 | DI for Tube Support Plate Material | 1 |

| Number | Title | Revision/Date |
|---|---|---|
| UGNR-SON2-RSG-014 | Discrepancy for tube thickness of TSP between Drawing and Purchase Specification | 0 |
| UGNR-SON2-RSG-015 | Unacceptable Indications by MT for wrapper support of Unit 2 #A | 1 |
| UGNR-SON2-RSG-021 | Unacceptable Indications by MT for Anti rotation support of Unit 2 #A | 0 |
| UGNR-SON2-RSG-027 | Unacceptable MT indication for Anti-Rotation Supports | 0 |
| UGNR-SON2-RSG-054 | Unacceptable length of 10 tube hole pitch of tube support Plate # 6 | 1 |
| UGNR-SON2-RSG-058 | Insufficient clearance between the tubes in Row No. 28 and 30 in Column No. 22 | 3 |
| UGNR-SON2-RSG-059 | Insufficient clearance between the tubes in Row No 92 and 94 in Column No. 34 | 0 |
| UGNR-SON2-RSG-067 | Unacceptable Gaps between Tubes and AVBs | 7 |
| UGNR-SON2-RSG-075 | Unacceptable gaps between Tubes and AVBs | 1 |
| UGNR-SON2-RSG-091 | Incorrect Machining for Steam Flow Limiting Device | 0 |
| UGNR-SON2-RSG-103 | Damaged Locking Plates of Vane Jacking Device | 9 |
| UGNR-SON2-RSG-109 | As built dimension of #2A RSG | 1 |
| UGNR-SON2-RSG-112 | As built dimension of #2B RSG | 0 |
| UGNR-SON3-RSG-001 | Tubesheet | 0 |
| UGNR-SON3-RSG-018 | Unacceptable local diameter change of Tube holes | 2 |
| UGNR-SON3-RSG-024 | Some Gaps between Tubes and AVBs are larger than the criterion | 1 |

| Number | Title | Revision/Date |
|---|---|---|
| UGNR-SON3-RSG-030 | Some gaps between tubes and AVBs are larger than the criterion | 0 |
| UGNR-SON3-RSG-051 | Divider Plate Weld Crack | 16 |
| UGNR-SON3-RSG-052 | Divider Plate Weld Crack | 19 |
| UGNR-SON3-RSG-057 | Extension of Tubesheet PWHT Duration | 1 |
| UGNR-SON3-RSG-059 | Out of Tolerance dimensions on Primary Inlet/Outlet Nozzles and Support Skirt | 1 |
| UGNR-SON3-RSG-062 | Out of tolerance dimensions on Primary Inlet/Outlet Nozzles and Support Skirt (#B RSG) | 1 |
| UGNR-SON3-RSG-067 | UT indications in the Alloy 600/690 butter of Divider Plate Weld Groove | 0 |
| UGNR-SON3-RSG-074 | As built dimensions of #3A RSG (Overall Height) | 0 |
| UGNR-SON3-RSG-075 | As built dimension of #3A RSG | 1 |
| UGNR-SON3-RSG-076 | As built dimension of #3B RSG | 0 |
| UHNR-SON3-RSG-07N001 | Divider Plates for Unit 3 | 0 |
| Heat Treatment Record 40010SG-B-900D-R1-68 | Heat Treatment Chart for SG3 | April 4, 2012 |
| SO23-617-1-M149 | Purchase Specification for Heat Transfer Tubing | 4 |
| Fabrication Process Sheet 3901-SG-A-400E (Order 2563901/G101) | Rework of AVB Insertion for SONGS Unit 2 Replacement Steam Generator #A – Lower Portion | 1 |

| Number | Title | Revision/Date |
|---|---|---|
| | | |
| Fabrication Process Sheet 3901-SG-A-400D (Order 2563901/2300) | Helium Leak Test for SONGS Unit 2 Replacement Steam Generator #A – Lower Portion | 0 |
| TSN-5050 | Control Document Status list For Alloy 690 SG Tubing | 2 |
| TSN-5051 | Program of Preproduction Qualification (PPQ) For Alloy 690 SG Tubing | 3 |
| TSN-5053 | Melting Procedure for Alloy 690 SG Tubing | 0 |
| TSN-5054 | Identification and Traceability Procedure for Alloy 690 SG Tubing | 2 |
| TSN-5055 | Prohibited and Detrimental Material Control Procedure for Alloy 690 SG Tubing | 0 |
| TSN-5072 | Sampling Test Specimen Procedure for Alloy 690 SG Tubing | 2 |
| TSN-5073 | Chemical Analysis Procedure for Alloy 690 SG Tubing | 1 |
| TSN-5074 | Inclusion Test Procedure for Alloy 690 SG Tubing | June 4, 2005 |
| 005F-No.4316 | PPQ Test Results of Alloy 690 SG Tubing for San Onofre Nuclear Generating station Unit 2&3 | 2 |
| 4009-3ir01 | Moody International Ltd Inspection Report of Sumitomo Metal Industries | September 28, 2005 |

## SEQUENCE OF EVENTS

### San Onofre Nuclear Generating Station, Unit 2 and 3 Steam Generators

| Date | Event Description |
|---|---|
| November 2001 | Licensee forms a team to study the viability of replacing the steam generators |
| May 7, 2002 | Vendor benchmarking commences |
| July 2002 | Bechtel replacement study complete |
| November 7, 2003 | Replacement steam generator specification complete |
| December 12, 2003 | Replacement steam generator specification sent to procurement office |
| December 21, 2003 | Replacement steam generator request for proposal issued |
| February 17, 2004 | Bechtel installation study report completed |
| February 27, 2004 | Steam generator replacement request filed with California Public Utility Commission |
| February 27, 2004 | Replacement steam generator bids received by SCE |
| July 28, 2004 | Replacement steam generator vendor selected |
| August 2, 2004 | Replacement steam generator bid evaluation review board start |
| September 13, 2004 | Replacement steam generator bid evaluation completed |
| September 16, 2004 | SCE Board of Directors approval for Mitsubishi to design and manufacture steam generators |
| September 30, 2004 | Replacement steam generator contract signed |
| September 30, 2004 | Fabrication of Unit 2 and Unit 3 steam generators commences at Mitsubishi |
| November 2004 | SCE performs first full quality assurance audit of Mitsubishi |
| March 2, 2005 | Replacement steam generator installation specification sent to procurement office |
| March 17, 2005 | Mitsubishi/SCE anti-vibration bar design discussion |
| March 2005 | SCE performs follow-up surveillance audit of Mitsubishi |
| March 23, 2005 | SCE places conditional qualification on Mitsubishi |

| | |
|---|---|
| September 21, 2005 | Final environmental impact report released to public |
| October 2005 | SCE performs follow-up quality assurance audit of Mitsubishi |
| December 15, 2005 | California Public Utility Commission approval received |
| December 15, 2005 | Installation contract signed with Bechtel |
| February 2006 | SCE performs follow-up quality assurance audit of Mitsubishi |
| March 10, 2006 | Edison International Company Board of Directors approval of steam generator replacement project |
| April 22, 2006 | SONGS Unit 2 refueling outage completed |
| May 1, 2006 | Replacement steam generator transportation specification issued |
| May 10, 2006 | SCE removes conditional qualification from Mitsubishi |
| September 27, 2006 | Sumitomo Metal Industries issues a non-conformance report on some tubing for non-conformance to specifications associated with the final mill annealing process |
| September 27, 2006 | Mitsubishi issues stop work order to Sumitomo |
| September 28, 2006 | Mitsubishi issues corrective action request to Sumitomo based on the final mill annealing non-conformance report |
| September 29, 2006 | Mitsubishi visits Sumitomo to conduct root cause investigation |
| October 3, 2006 | Mitsubishi visits Sumitomo to confirm the adequacy of the corrective actions taken to address the root cause findings from the September 29, 2006 meeting |
| October 3, 2006 | Mitsubishi releases stop work order after confirming adequacy of Sumitomo's corrective actions |
| November 10, 2006 | Non-conformance report associated with final mill annealing process is closed |
| March 12, 2007 | Corrective action request associated with the final mill annealing non-conformance report closed |
| May 8, 2007 | Mitsubishi performs followup audit at Sumitomo and issues corrective action request for two findings in the audit |
| July 17, 2007 | Sumitomo submits corrective actions taken for the findings of the May 8, 2007 audit; Mitsubishi closes corrective action request. |
| September 13, 2006 | Mitsubishi/SCE technical meeting regarding anti-vibration bars |

| | |
|---|---|
| April 2008 | Fabrication of Unit 2 steam generators complete |
| April – June 2008 | Mitsubishi performs primary and secondary side hydrostatic pressure tests of Unit 2 steam generators |
| July 4, 2008 | AREVA performs baseline pre-service eddy current examinations on steam generator 2E0-89 at Mitsubishi facilities in Kobe, Japan |
| July 18, 2008 | AREVA performs baseline pre-service eddy current examinations on steam generator 2E0-88 at Mitsubishi facilities in Kobe, Japan |
| ~~July 18, 2008~~ | ~~NRC Inspection Report 99901030/2008-201 was issued. An inspection was completed at the Mitsubishi facility in Kobe, Japan. No violation or non-conformances were identified~~ |
| September and October 2008 | Final inspection for Unit 2 steam generators is completed. Primary and secondary sides filled with nitrogen. |
| December 16, 2008 | Unit 2 steam generators shipped from Kobe, Japan |
| February 14, 2009 | Unit 2 steam generators arrive at SONGS |
| Early March 2009 | Fabrication of Unit 3 steam generators complete |
| Middle March 2009 | Primary and secondary hydrostatic pressure tests conducted on Unit 3 steam generators |
| March 18, 2009 | Unit 3 divider plate weld failure discovered |
| March – July 2009 | Root cause evaluation of the divider plate-to-tubesheet weld conducted by Mitsubishi |
| March – June 2009 | Repair procedures developed for Unit 3 steam generators |
| June 2009 | Repair work on Unit 3 steam generators commences |
| July 2009 | AREVA performs final pre-service eddy current examinations on Unit 2 steam generators at SONGS |
| September 2009 – April 2010 | Unit 2 performs a refueling outage and installs the replacement steam generators |
| March 29, 2010 | Repair work to Unit 3 steam generator 3E0-89 complete |
| April 5, 2010 | Repair work to Unit 3 steam generator 3E0-88 complete |
| April 2010 | Unit 2 recommences power operations |
| April 18, 2010 | Unit 3 steam generator 3E0-89 passes primary side hydrostatic pressure retest |

| | |
|---|---|
| April 24, 2010 | Unit 3 steam generator 3E0-88 passes primary side hydrostatic pressure retest |
| June 2010 | AREVA performs baseline pre-service eddy current examinations on Unit 3 steam generators at Mitsubishi facilities in Kobe, Japan |
| August 2, 2010 | Unit 3 steam generators shipped |
| October 4, 2010 | Unit 3 steam generators arrive at SONGS |
| October 2010 – February 2011 | Unit 3 performs a refueling outage and installs the replacement steam generators |
| February 2011 | Unit 3 recommences power operations |
| January 10, 2012 | Unit 2 refueling outage start |
| January 31, 2012 | Unit 3 tube leak; rapid shutdown commences |
| February 2, 2012 | Unit 3 reaches cold shutdown conditions |
| February 12, 2012 | Unit 3 eddy current inspections commence on both steam generators |
| March 13, 2012 | In-situ pressure testing commences on tubes in steam generator 3E0-88 of Unit 3 |
| March 14, 2012 | In-situ pressure test failures on tubes located in Row 106 Column 78, Row 102 Column 78, and Row 104 Column 78 of steam generator 3E0-88 |
| March 15, 2012 | In-situ pressure test failures on tubes located in Row 100 Column 80, Row 107 Column 77, Row 101 Column 81, and Row 98 Column 80 of steam generator 3E0-88 |
| March 16, 2012 | In-situ pressure test failure on tube located in Row 99 Column 81 of steam generator 3E0-88 |
| March 16 – 21, 2012 | The 65 remaining tubes in steam generator 3E0-88 pass in-situ pressure testing |
| March 15 – 21, 2012 | The 56 identified tubes in steam generator 3E0-89 of Unit 3 are in-situ pressure tested and all tubes passed. |
| March 19 – 29, 2012 | NRC Augmented Inspection Team performs inspections at SONGS |
| March 23, 2012 | NRC received a letter from SCE outlining their commitments for corrective actions prior to restart of both Unit 2 and Unit 3 |

| | | |
|---|---|---|
| March 27, 2012 | NRC issues a Confirmatory Action Letter to SCE | Form |
| June 18, 2012 | NRC conducts public Augmented Inspection Team exit meeting near SONGS | Form |

UNITED STATES
NUCLEAR REGULATORY COMMISSION
REGION IV
1600 EAST LAMAR BLVD
ARLINGTON, TEXAS 76011-4511

~~July 18, 2012~~

Mr. Peter Dietrich
Senior Vice President and
Chief Nuclear Officer
Southern California Edison Company
San Onofre Nuclear Generating Station
P.O. Box 128
San Clemente, CA 92674-0128

SUBJECT: SAN ONOFRE NUCLEAR GENERATING STATION – NRC AUGMENTED INSPECTION TEAM REPORT ~~05000361/2012007 and~~ 05000362/2012007

Dear Mr. Dietrich:

The U. S. Nuclear Regulatory Commission (NRC) completed an inspection at your San Onofre Nuclear Generating Station (SONGS). The enclosed report documents the inspection results, which were discussed with you and other members of your staff during a public exit meeting on June 18, 2012.

~~The Augmented Inspection Team (AIT) was established to review the causes, safety implications, and your staff's actions following an event that occurred on January 31, 2012, involving a reactor coolant leak identified in a Unit 3 steam generator and a subsequent identification that multiple steam generator tubes in Unit 3 had experience substantial and unusual wear, eight of which failed pressure testing. The SONGS Unit 3 steam generators were new and had been in operation for less than one operating cycle. At the time of the event, SONGS Unit 2 was shutdown in a refueling outage with steam generators that had been in service for one operating cycle.~~

Unit 3 had been operating for approximately one year following replacement of the steam generators when on January 31, 2012, control room operators received alarms, that indicated reactor coolant was leaking into steam generator 3E0-88. The leak was unexpected, and the control room operators responded in accordance with their procedures to perform a rapid shutdown, since the leak, although small, had increased enough in a short period of time to warrant the precautionary shutdown. The estimated leak rate was 75 gallons per day. The facility license allows full power operation with a steady leak rate of less than 150 gallons per day.

The first indication of the leak was from the main condenser air ejector radiation monitors reaching their alarm set point. The radiation monitors continuously sample from a vent stack for the purpose of rapidly identifying steam generator tube leaks. This was a direct release of

radioactivity to the atmosphere, which is allowed by the facility license, up to limits in the regulations. The licensee reviewed the amount of gaseous radioactivity released and estimated a dose of approximately 0.0000452 mrem to a member of the public. The annual regulatory limit to a member of the public is 100 mrem per year. During a radiation protection inspection the week of February 13, 2012, the team reviewed the licensee dose estimates and did not identify any issues.

Unit 3 control room operators performed a controlled shutdown of Unit 3 on January 31, 2012, and reached cold shutdown conditions on February 2, 2012. The operators then prepared the steam generators for tube inspections, which were started on February 12, 2012. The first inspection confirmed the location of the leak in steam generator 3E0-88. One tube was found with a small leak and no other tubes were leaking.

The licensee completed an extensive and expanded eddy current inspection of 100 percent of the steam generator tubes in both Unit 3 steam generators. Following pre-established testing requirements, the licensee identified 129 tubes in Unit 3 (56 tubes in steam generator 3E0-89 and 73 tubes in steam generator 3E0-88) that required in-situ pressure testing. This testing began on March 13, 2012, and was performed under ambient conditions.

Of the 129 tubes tested, a total of 8 tubes failed in-situ pressure testing, which included the original tube that was leaking. All of the failed tubes occurred in steam generator 3E0-88. Three of the tubes failed at or below a test pressure (3200 psi) equivalent to a design basis main steam line break differential pressure and temperature. The remaining five tubes failed near, but below the maximum differential test pressure of 5250 psig. This test pressure was equivalent to the minimum burst pressure capacity required by the plant technical specifications.

In accordance with Management Directive 8.3, "NRC Incident Investigation Program," deterministic and conditional risk criteria were used to evaluate the level of NRC response for this operational event. This event met three deterministic criteria (involved a major deficiency in design having potential generic safety implications; led to a significant loss of integrity of the primary coolant pressure boundary; and, involved an emergency or non-emergency event or situation, related to the health and safety of the public or on-site personnel or protection of the environment, for which a 10 CFR 50.72 report has been submitted that is expected to cause significant, heightened public or government concern) and the conditional large early release probability for the event was estimated to be in the overlap range for a special inspection/augmented inspection. Based on deterministic criteria being met and the risk assessment of this condition, Region IV, in consultation with the Office of Nuclear Reactor Regulation and Office of Nuclear Security and Incident Response, concluded that the NRC response should be an augmented team inspection.

This augmented inspection was chartered, in part, to ~~review~~identify the circumstances surrounding the tube degradation; review the licensee's actions following discovery of the conditions; evaluate the licensee's ~~determination~~review of ~~the~~potential causes of the unusual steam generator tube wear; review the steam generator modeling; and, assess the differences between Unit 2 and Unit 3 steam generators. ~~The charter is available in ADAMS at ML12075A258. It is not the responsibility of an AIT to determine compliance with the NRC rules~~

~~and regulations or to recommend enforcement actions, this will be done through subsequent NRC inspection or review.~~

~~The~~ Based on inspection, the team concluded that: (1) plant operators responded to the ~~January 31, 2012, steam generator tube leak~~event in accordance with procedures ~~and~~ in a manner that protected public health and safety. ~~Plant~~; (2) safety systems ~~worked as expected during the event.~~

~~The NRC team identified ten~~were maintained and responded in accordance with the plant design; and (3) the loss of steam generator tube integrity was a serious safety issue that must be resolved. The purpose of this inspection was to gather facts and identify issues requiring followup, and, as such, no findings were identified. Ten items requiring additional ~~review for regulatory action. These items~~followup are documented as "unresolved" items in the enclosed report. ~~The NRC will conduct subsequent inspections or reviews to determine what, if any, regulatory actions result from the "unresolved" items.~~

~~SONGS Unit 3 steam generators had experienced excessive vibration of tubes in the U-bend region of the steam generators to the extent that the tubes rubbed against each other (tube-to-tube interactions) causing excessive wear and loss of structural integrity. Your staff determined that the vibration was caused by the steam conditions in the U-bend region of the steam generators by a phenomenon called "fluid elastic instability." The NRC inspection team concluded that the steam generators' design and configuration did not provide the necessary margin to prevent this phenomenon.~~

~~Although the steam generator tube degradation from this phenomenon observed in Unit 2 steam generators was not as severe, the NRC team concluded that both units' steam generators were of similar design with similar thermal-hydraulic conditions and configurations. Therefore, SONGS Unit 2 steam generators are also susceptible to this phenomenon.~~

~~Accordingly, as documented in NRC Confirmatory Action Letter dated March 27, 2012, (ML12087A323), you are required to submit in writing to NRC for review and acceptance, your actions and plans to prevent recurrence of loss of tube integrity before the resumption of power operations in both SONGS Units 2 and 3.~~

In accordance with 10 CFR 2.390 of the NRC's "Rules of Practice," a copy of this letter, its enclosure, and your response (if any) will be available electronically for public inspection in the NRC Public Document Room or from the Publicly Available Records (PARS) component of the NRC's document system (ADAMS). ADAMS is accessible from the NRC Web site at http://www.nrc.gov/reading-rm/adams.html (the Public Electronic Reading Room).

Sincerely,

~~/RA/~~

Elmo E. Collins
Regional Administrator

Docket No.: ~~50-361, 50-362~~05000362
License No: NPF~~-10, NPF-~~15

Enclosure:
~~1.~~ Inspection Report ~~05000361/2012007 and~~ 05000362/~~20120072~~012-007

w/Attachment~~(s):~~
~~1.~~ Supplemental Information
~~2. Sequence of Events~~

cc w/ encl: Electronic Distribution

DISTRIBUTION:

Regional Administrator (Elmo.Collins@nrc.gov)
Deputy Regional Administrator (Art.Howell@nrc.gov)
DRP Director (Kriss.Kennedy@nrc.gov)
DRP Deputy Director (Allen.Howe@nrc.gov)
DRS Director (Tom.Blount@nrc.gov)
DRS Deputy Director (Patrick.Louden@nrc.gov)
Senior Resident Inspector (Greg.Warnick@nrc.gov)
Resident Inspector (John.Reynoso@nrc.gov)
SONGS Administrative Assistant (Heather.Hutchinson@nrc.gov)
Branch Chief, DRS/PSB2 (Greg.Werner@nrc.gov)
Branch Chief, DRP/D (Ryan.Lantz@nrc.gov)
Senior Project Engineer, DRP/D (Nick.Taylor@nrc.gov)
Project Engineer, DRP/D (David.You@nrc.gov)
Project Engineer, DRP/D (Brian.Parks@nrc.gov)
Public Affairs Officer (Victor.Dricks@nrc.gov)
Public Affairs Officer (Lara.Uselding@nrc.gov)
Branch Chief, DRS/TSB (~~Ray.Keller~~Dale.Powers@nrc.gov)

RITS Coordinator (Marisa.Herrera@nrc.gov)
Regional Counsel (Karla.Fuller@nrc.gov)
Congressional Affairs Officer (Jenny.Weil@nrc.gov)
OEMail Resource
RIV/ETA: OEDO (Michael.McCoppin@nrc.gov)
DRS/TSB STA (Dale.Powers@nrc.gov)
RSLO (Bill.Maier@nrc.gov)
D/DIR, DORL (Louise.Lund@nrc.gov)
PM (Randy.Hall@nrc.gov)
D: NRR (Eric.Leeds@nrc.gov)
D: NSIR (Jim.Wiggins@nrc.gov)
D: NRO (Glen.Tracy@nrc.gov)
NRR/LPL4 (Michael.Markley@nrc.gov)
NRR/IOEB (Harold.Chernoff@nrc.gov)

DOCUMENT NAME: S:DRS\REPORTS\SONGS 2012007 AIT-GEW
~~ADAMS Accession No.:~~ ML12188A748

| | | | | | |
|---|---|---|---|---|---|
| SUNSI Rev Compl. | ☑Yes ☐ No | ADAMS | ☑Yes ☐ No | Reviewer Initials | GEW |
| Publicly Avail. | ☑Yes ☐ No | Sensitive | ☐Yes ☑ No | Sens. Type Initials | GEW |

| | | | | | |
|---|---|---|---|---|---|
| ~~DRS/PSB1~~AIT Member/RIV | AIT Member/~~RIV~~RII | AIT Member/~~RII~~NRO | AIT Member/~~NRO~~NRR | AIT Member/NRR | AIT Member/~~NRR~~RES |
| ~~GWerner~~JReynoso | ~~JReynoso~~JRivera-Ortiz | ~~JRivera-Ortiz~~JOrtega-Luciano | ~~JOrtega-Luciano~~EMurphy | ~~EMurphy~~AJohnson | ~~AJohnson~~CThurston |
| ~~GEW /RA/e-mailed~~ | ~~Per e-mail~~mailed | ~~Per e-mail~~mailed | ~~Per e-mail~~ | ~~Per e-mail~~ | ~~Per e-mail~~mailed |
| 07/~~09~~10/12 | 07/~~10~~09/12 | 07/09/12 | ~~07/09/12~~ | ~~07/12/12~~ | 07/~~12~~11/12 |
| AIT ~~Member/RES~~ Team Leader/RIV | ~~SRA/RIV~~D:DRS | ~~AIT Team Leader/RIV~~DRA | ~~D:DRS~~RA | | ~~RA~~ |
| ~~CThurston~~GWerner | ~~MRunyan~~TBlount | ~~GWerner~~AHowell | ~~TBlount~~ECollins | | ~~ECollins~~ |
| ~~Per e-mail~~ | ~~Per e-mail~~ | ~~GEW /RA/~~ | ~~TB /RA/~~ | | ~~/RA/~~ |
| 07/11/12 | ~~07/12/12~~ | ~~07/12/12~~ | ~~07/13/2012~~ | | ~~07/18/2012~~ |

OFFICIAL RECORD COPY

~~NRR/DORL (Doug.Broddus@nrc.gov)~~
EDO (Bill.Borchardt@nrc.gov)
DEDR (Michael.Johnson@nrc.gov)
DIR, DORL Michele.Evans@nrc.gov
DIR, DIRS Ho.Nieh@nrc.gov
D/DIR, DIRS John.Lubinski@nrc.gov

## EXECUTIVE SUMMARY

On ~~March 19, 2012, an Augmented Inspection Team (AIT) was dispatched to~~January 31, 2012, San Onofre Nuclear Generating Station ~~to gather facts and understand the circumstances surrounding the January 31, 2012~~(SONGS) Unit 3 control room operators received an alarm that indicated a primary~~-~~to-secondary ~~leak~~ reactor coolant leak from steam generator 3E0-88. Although the leak rate was small, it increased enough in a short period of time for the licensee to perform a rapid shutdown. The estimated leak rate was 75 gallons per day. The facility license allows full power operation with a steady state leak rate of less than 150 gallons per day. On February 2, 2012, Unit 3 reached cold shutdown conditions.

On February 12, 2012, Southern California Edison (SCE) commenced eddy current inspections of 100 percent of the tubes in both Unit 3 steam generators. During these inspections, the licensee discovered unexpected wear in both steam generators, including wear at retainer bars (similar to the wear found in Unit 2 steam generators) and significant tube-to-tube wear in the free-span areas. The inspections identified 56 tubes in steam generator 3E0-89 and ~~failure of eight~~73 tubes in steam generator ~~tubes~~ 3E0-88 that SCE performed in-situ pressure testing on to ~~maintain~~determine if they met the structural integrity ~~as required by~~requirements in plant technical specifications ~~during testing~~.

From March 13 – 21, 2012, AREVA conducted in-situ pressure testing of the suspect tubes in both steam generators. There were a total of eight tube failures during testing, all in steam generator 3E0-88. These tubes failed to satisfy the tube integrity performance criteria. At the time of the augmented team inspection, no stabilization or plugging of tubes had been performed in Unit 3 because the licensee was still conducting a cause evaluation of the failed tubes. There were two members of the Augmented Inspection Team on-site during the week of March ~~13, 2012. The primary-to-secondary leak was the result of a single tube in Unit 3 steam generator 3E0-88 failing to maintain structural integrity.~~ 12 that observed portions of the in-situ pressure testing.

~~Specifically the AIT was chartered to review the circumstances surrounding the tube degradation; review the licensee's actions following discovery of the conditions; evaluate the licensee's determination of the causes of the unusual steam generator tube wear; review the steam generator modeling; and, assess the differences between Unit 2 and Unit 3 steam generators.~~

~~The team determined that plant operators responded to the event in a manner that protected public health and safety and all safety systems performed their functions to support the safe shutdown and cooldown of the plant. However, the loss of steam generator tube integrity is a serious safety issue that must be resolved prior to further power operation.~~

~~The AIT~~On March 23, 2012, NRC received a letter from SCE outlining their commitments for corrective actions prior to restart of both Unit 2 and Unit 3.

On March 27, 2012, the NRC issued a Confirmatory Action Letter to SCE, which outlined specific actions the licensee must complete before restarting Units 2 and 3 that included identifying the cause of the tube wear; taking corrective actions to prevent loss of tube integrity; and performing a mid-cycle outage to perform tube inspections.

From March 19 – 29, 2012, the NRC Augmented Inspection Team performed on-site inspections at SONGS. After the on-site portion was completed, the team continued to review various documents and attended a number of expert panels associated with the cause evaluations, thermal/hydraulic modeling, and Unit 2 operational assessment. The team identified ten unresolved items that warranted additional follow-up: (1) adequacy of the post trip/transient procedure; (2) evaluation and disposition of the Unit 3 loose parts monitor alarms; (3) design of retainer bar; (4) control of original design dimensions; (5) evaluation of and controls for divider plate repair; (6) atmospheric controls of Unit 3 steam generators during shipment; (7) no tube bundle support used during shipping; (8) evaluation and disposition of ~~accelerometer readings during shipping~~accelerometers; (9) adequacy of Mitsubishi's thermal-hydraulic model; and (10) change of methodologies associated with 10 CFR 50.59 review. ~~Consistent with existing NRC inspection processes, these unresolved issues will be inspected and dispositioned during follow-up inspection efforts to determine if there are any violations of regulatory requirements.~~

~~The AIT inspection~~

The team determined: (1) plant operators responded to the event in accordance with procedures in a manner that protected public health and safety; (2) equipment responded in accordance with the plant design; and (3) the cause evaluations for the tube wear were appropriate.

At the time of the leak on Unit 3 steam generator 3E0-88, Unit 2 had completed eddy current testing of all the tubes in both steam generators as part of their first refueling outage subsequent to the steam generators being replaced in 2009. The eddy current testing did identify significant tube wear around the upper retainer bar, with one tube requiring in-situ pressure testing. Wear indications were found at anti-vibration bar supports, tube support plates and at a foreign object (that was removed). Southern California Edison did determine the cause of tube wear in Unit 2 to be from vibration of the tubes against the retainer and anti-vibration bars. Initially, no tube-to-tube wear was identified. Because of the extensive tube-to-tube wear identified on Unit 3, SCE conducted additional eddy current testing on 1375 tubes on each Unit 2 steam generator. This testing was completed using a more sensitive probe in the same area where tube-to-tube wear was identified on Unit 3. The licensee identified that two tubes in Unit 2 exhibited tube-to-tube wear similar to the wear identified in Unit 3 steam generators. Initially, these findings resulted in a total of 94 plugged tubes, with 15 tubes stabilized in steam generator 2E0-89. For steam generator 2E0-88 this initially resulted in 98 plugged tubes, with 18 tubes stabilized. Additional plugging and stabilizing was completed for Unit 2 steam generators to address the causes of

tube-to-tube wear identified. The corrective actions taken to address the causes of the tube-to-tube wear will be inspected as part of the Confirmatory Action Letter and documented in Inspection Report 05000361, 362/2012009.

Overall, the team concluded that: ~~(1)~~ SCE was ~~adequately~~ pursuing the causes of the unexpected steam generator tube-to-tube degradation. In an effort to identify the causes, SCE ~~retained~~brought in a ~~significant~~large number of outside industry experts, consultants, and steam generator manufacturers, including Westinghouse and AREVA to perform thermal-hydraulic and flow induced vibration modeling and analysis~~; (2) The~~. Southern California Edison identified the most probable causes of the tube-to-tube wear as a combination of ~~unpredicted, adverse~~higher than predicted thermal-/hydraulic conditions and insufficient tube-to-anti-vibration bar contact forces ~~in the upper tube bundle caused a phenomenon called "~~. In addition, SCE concluded that the differences in manufacturing/fabrication could contribute to the tube-to-tube wear seen in the Unit 3 steam generators.

The NRC team independently concluded that the cause of the fluid-elastic instability~~" which was a significant contributor to the tube to tube wear resulting in the tube leak.~~ vibration was primarily the higher than predicted thermal-hydraulic conditions, along with insufficient contact forces (loss of anti-vibration bar contribution to damping) in the upper tube bundle. The team ~~concluded~~believes that the differences in severity of the tube-to-tube wear between Unit 2 and Unit 3 may be related to the ~~changes to the~~improved manufacturing/fabrication of the tubes and other components which may have resulted in increased clearance between the anti-vibration bars and the tubes~~; (3) Due to modeling errors, the SONGS replacement generators were not designed with adequate thermal hydraulic margin to preclude the onset of fluid-elastic instability. Unless changes are made to the operation or configuration of the steam generators, high fluid velocities and high void fractions in localized regions in the u-bend will continue to cause excessive tube wear and accelerated wear that could result in tube leakage and/or tube rupture; (4) The thermal hydraulic phenomena contributing to the fluid-elastic instability is present in both Unit 2 and 3 steam generators; (5) Based on the updated final safety analysis report description of the original steam generators, the steam generators major design changes were appropriately reviewed in accordance with the 10 CFR 50.59 requirements. However, further review is required related to the change in methodology used for the steam generator stress analysis calculations.~~. Additional inspection will be required to review and closeout the unresolved items.

~~With regard to the radiological release as a result of the tube leak, it was determined that the tube leak was detected by the condenser steam jet air ejector radiation monitor as per design. In addition, the radiation monitor alarmed and alerted SONGS operators of the steam generator tube leak as required. The release resulted in an estimated 0.0000452 (4.52 E-5) mrem dose to the public.~~

TABLE OF CONTENTS

EXECUTIVE SUMMARY ..... - 1 -

SUMMARY OF FINDINGS ..... - 2 -

~~SUMMARY OF FINDINGS~~ ..... 1.0 Description of Event (Charter Item 1) ..... - 3 -

~~1.0 Description~~1 ..... Sequence of ~~Event (Charter Item 1)~~Events ..... - 3 -

~~1.1 Sequence of Events~~2 ..... System Descriptions ..... - 6 -

~~1.2 System Descriptions~~ ..... 1.3 Resident Inspectors' Assessment of Steam Generator Tube Leak Event Response ..... - 7 -

~~1.3 Resident Inspectors' Assessment~~4 ..... Description of Steam Generator ~~Tube Leak Event Response~~Inspections at SONGS Unit 2 ..... - 10 -

1.4~~5~~ Description of Steam Generator Inspections at SONGS Unit ~~2~~3 ..... - 12 -

~~1.5 Description of Steam Generator Inspections at SONGS Unit 3~~ ..... 1.6 In-Situ Pressure Testing ..... - 14 -

~~1.6 In-Situ Pressure Testing~~ ..... 2.0 Probable Cause Evaluation (Charter Item 2) ..... - 16 -

2.0 ~~Probable~~1 ..... SCE Cause Evaluation ~~(Charter Item 2)~~ ..... - 17 -

2.~~1~~ ~~SCE~~2 ..... Mitsubishi Cause Evaluation ..... - 18 -

~~2.2 Mitsubishi Cause Evaluation~~ ..... 3.0 Operational Differences in Configuration and Operation Between Unit 2 and 3 (Charter item 3) ..... - 21 -

~~3~~4.0 ~~Operational~~ ..... Design and Manufacturing Differences ~~in Configuration and Operation between Unit 2 and 3~~ ~~(Charter item 3)~~ ... Item #4) (Mitsubishi Heavy Industries Charter Item 1) ..... - 23 -

~~4~~5.0 ~~Design and Manufacturing Differences~~ .. Quality Assurance/Quality Control (Charter Item ~~#4~~5) (Mitsubishi Charter Item ~~1~~4) ..... - 38 -

5.0 ~~1~~ .. SONGS Quality Assurance/Quality Control ~~(Charter Item 5) (Mitsubishi Charter Item 4)~~ ..... - 38 -

5.~~1~~ ~~SONGS~~2 ..... Mitsubishi Heavy Industries Quality Assurance/Quality Control ..... - 40 -

5.~~2~~ ~~Mitsubishi~~ 3 ..... Quality Assurance/~~Quality Control~~ Conclusion ..... - 42 -

~~5.3 Quality Assurance Conclusion~~ ..... ~~6.0~~
Implementation of Steam Generator Industry Information (Charter Item 6) (Mitsubishi Heavy Industries Charter Item 3) ..... - 42 -

~~6.0 Implementation of Steam Generator Industry Information (Charter Item 6) (Mitsubishi Charter Item 3)~~ ..... ~~7.0~~
..... Packing, Shipping, Handling, and Receipt Inspection (Charter Item 7)
..... - 45 -

~~7~~8.0 ~~Packing, Shipping, Handling,~~Thermal-hydraulic and ~~Receipt Inspection~~Flow Induced Vibration Modeling (Charter Item ~~7)~~ ..... 45 -~~8)~~

~~8.0 Thermal-hydraulic and Flow Induced Vibration Modeling (Charter Item 8)~~ ..... - 47 -
- 45 -

9.0 Risk Assessment (Charter Item 9) ..... - 60 -

10.0 Assess Quality Assurance, Radiological Controls, and Safety Culture Components ~~——~~(Charter Item 10) ..... - 60 -

11.0 Operational impacts from Unit 3 to Unit 2 (Charter Item 11) ..... - 62 -

12.0 Divider Plate Manufacturing and Weld Issues (Mitsubishi Heavy Industries Charter Item 2) ..... - 63 -

13.0 Office of Nuclear Reactor Regulation ~~(NRR)~~ Review of SONGS 50.59 Evaluation ..... - 67 -

14.0 Exit Meeting Summary ..... - 69 -

ATTACHMENT 1: SUPPLEMENTAL INFORMATION ..... ~~A1 -~~ 1 -
A1-1

ATTACHMENT 2: ~~ATTACHMENT 2~~ SEQUENCE OF EVENTS ..... ~~A2 -~~ 1 - .....
..... A2-1

**U.S. NUCLEAR REGULATORY COMMISSION**
**REGION IV**

| | |
|---|---|
| Docket: | ~~50-361, 50-362~~05000362 |
| License: | ~~NPF-10, NPF-15~~ |
| Report: | ~~05000361/2012007 and~~ 05000362/2012007 |
| Licensee: | Southern California Edison Company |
| Facility: | San Onofre Nuclear Generating Station~~, Unit 2 and 3~~ |
| Location: | 5000 S. Pacific Coast Hwy<br>San Clemente, California |
| Dates: | March 15 through June 18, 2012 |
| Team Leader: | G. Werner, RIV/Branch Chief/Plant Support Branch 2 |
| Inspectors: | A. Johnson, NRR/Materials Engineer<br>E. Murphy, NRR/Senior Materials Engineer<br>J. Ortega-Luciano, NRO/Reactor Operations Engineer<br>J. Reynoso, RIV/Resident Inspector<br>J. Rivera-Ortiz, RII/Senior Reactor Inspector<br>C. Thurston, RES/Reactor Systems Engineer |
| Approved By: | Elmo E. Collins, Regional Administrator |

## SUMMARY OF FINDINGS

~~IR 05000361/2012007;~~IR 05000362/2012007, 03/15/2012 through 06/18/2012, San Onofre Nuclear Generating Station; Augmented Inspection Team.

An Augmented Inspection Team was approved on March 16, 2012. Two inspectors on the team were onsite observing in-situ pressure testing the week of March 12. The remaining inspectors were dispatched to the site on March 19, 2012, to assess the facts and circumstances surrounding the tube leak and unexpected wear of tubes in Unit 3 steam generators. The Augmented Inspection Team was established in accordance with NRC Management Directive 8.3, "NRC Incident Investigation Program," and implemented using Inspection Procedure 93800, "Augmented Inspection Team." The inspection was conducted by a team of inspectors from the NRC's Region IV and Region II offices, the resident inspector from San Onofre Nuclear Generating Station, one engineer from the NRC Office of New Reactors, two engineers from the NRC Office of Nuclear Reactor Regulation, and one engineer from the NRC Office of Research. The team identified 10 issues that will require additional NRC inspection. These issues are tracked as unresolved items in this report.

A. NRC-Identified and Self-Revealing Findings

None

B. Licensee-Identified Violations

None

1.0 Description of Event (Charter Item 1)

1.1 Sequence of Events

In November 2001, SCE formed a team to study the viability of replacing the Unit 2 and Unit 3 original steam generators. The licensee performed an assessment of six steam generator vendors, which included vendor benchmarking, development of the replacement steam generator design specifications, a steam generator request for proposal, and a steam generator bid evaluation. In September 2004, the licensee selected Mitsubishi Heavy Industries (Mitsubishi) as the manufacturer of the replacement steam generator.

A general description and comparison of the Unit 2 and Unit 3 steam generators is included in Section 1.2 of this report.

In September 2004, Mitsubishi commenced fabrication of Unit 2 steam generators 2E0-89 and 2E0-88, and completed fabrication in April 2008.

At the time of the contract signing in September 2004, Mitsubishi had a quality assurance program in place that had been approved by the licensee, by taking credit for other utilities' reviews of Mitsubishi's quality assurance program. The licensee informed Mitsubishi that once enough fabrication was underway to support an evaluation, the licensee would perform an audit to confirm that their quality assurance program was operating properly.

In November 2004, the licensee performed an audit of the Mitsubishi quality assurance program at their facilities in Kobe, Japan, and then followed up with a surveillance inspection in March 2005. As a result of these two activities, the licensee informed Mitsubishi that additional oversight of Mitsubishi's design control activities was required. The licensee informed Mitsubishi that the additional oversight conditions would remain in place until such time that Mitsubishi had demonstrated improved design control performance, which would be verified by the licensee. After implementing the extra quality control steps, Mitsubishi submitted a letter to SCE stating that they were ready for the conditional qualification to be lifted. The licensee performed followup audits of Mitsubishi in October 2005 and February 2006, but still found enough instances of design control issues that the additional oversight requirements of the conditional qualification were not lifted. In May 2006, SCE was able to verify that Mitsubishi had demonstrated improved design control performance and therefore removed the conditional qualification of Mitsubishi.

After fabrication of the Unit 2 steam generators was complete in April 2008, Mitsubishi performed hydrostatic pressure tests of the primary and secondary sides of the Unit 2 steam generators. In July 2008, after completion of the hydrostatic pressure tests, AREVA performed the baseline eddy current pre-service examinations of the Unit 2 steam generators at the Mitsubishi facilities in Japan. The final inspections for the Unit 2 steam generators were completed in September and October 2008, followed by filling the primary and secondary sides of the Unit 2 steam generators with nitrogen. The Unit 2 steam generators were shipped from the Mitsubishi facilities in December 2008 and received on site at SONGS in February 2009. In July 2009, AREVA performed the

final eddy current pre-service examination on the Unit 2 steam generators at SONGS. The baseline and final eddy current pre-service examinations were performed in Japan and at SONGS, respectively, to assess whether any changes to the steam generator tubing had resulted from shipping, and no changes were identified.

The Unit 2 steam generators were installed during a refueling outage, between September 2009 and April 2010. On April 13, 2010, Unit 2 returned to power operations. NRC engineering inspectors performed inspections in accordance with Inspection Procedure 50001, "Steam Generator Replacement Inspection," and Inspection Procedure 71111.17, "Evaluations of Changes, Tests, or Experiments and Permanent Plant Modifications." This included a review of selected portions of modifications associated with the replacement steam generators to determine if the changes were done in accordance with 10 CFR 50.59. The results of the inspection of the replacement steam generators for Unit 2 are documented in NRC Inspection Report 05000361/2009007. ~~(ML100630838)~~

The fabrication of the Unit 3 steam generators 3E0-89 and 3E0-88 was completed between September 2004 and April 2010. The design specifications of the Unit 2 and Unit 3 steam generators were the same when the contract between the licensee and Mitsubishi was signed; however, due to a fabrication issue, there was a modification to the divider plate-to-channel head weld requirements for the Unit 3 steam generators, and to the classification of the Unit 3 tubesheet material. The specifics of these modifications are discussed further in Section 1.2.a of this report.

In March 2009, after initial fabrication of the Unit 3 steam generators was complete, Mitsubishi performed hydrostatic pressure tests of the primary and secondary sides of the Unit 3 steam generators. After completion of the hydrostatic pressure tests, a visual inspection of the steam generator reactor coolant side revealed cracks in the welds that join the divider plate to the channel head of both steam generators.

From March through July of 2009, Mitsubishi performed a root cause evaluation, which showed that a change in the weld preparation process for the divider plate-to-channel head weld had resulted in the cracking of the weld. A repair procedure was developed and repair work on the Unit 3 steam generators began in June 2009. The repairs to the Unit 3 steam generators were completed in late March (3E0-89) and early April (3E0-88) of 2010. In late April 2010, the Unit 3 steam generators passed the primary hydrostatic pressure re-tests. In June 2010, AREVA performed a final eddy current pre-service examination of the steam generators at the Mitsubishi facilities in Japan, and this was used as the baseline pre-service examination for the Unit 3 steam generators. The steam generators were shipped from the Mitsubishi facilities in Japan in early August 2010, and arrived at SONGS in early October 2010.

The Unit 3 steam generators were installed during a refueling outage, between October 2010 and February 2011. On February 18, 2011, Unit 3 returned to power operations. NRC engineering inspectors performed inspections in accordance with Inspection Procedure 50001, "Steam Generator Replacement Inspection," and Inspection Procedure 71111.17, "Evaluations of Changes, Tests, or Experiments and Permanent Plant Modifications." This included a review of selected portions of modifications associated with the replacement steam generators to determine if the changes were

done in accordance with 10 CFR 50.59. The results of the inspection of the replacement steam generators for Unit 3 are documented in NRC Inspection Report 05000362/2010009. ~~(ML111300448)~~

Unit 2 was shut down for a scheduled refueling outage on January 10, 2012. Steam generator tubing inspections in steam generator 2E0-89 found unexpected wear caused by retainer bars on two tubes that required plugging in accordance with the technical specifications. Steam generator tubing inspections in steam generator 2E0-88 found wear on four tubes that required plugging in accordance with the technical specifications. Anti-vibration bars caused the wear on two of the tubes and retainer bars caused the wear on the other two tubes. Because of the unexpected wear, the licensee preventatively plugged 94 tubes in steam generator 2E0-89 and 98 tubes in steam generator 2E0-88. Fifteen of the tubes in steam generator 2E0-89 were stabilized prior to plugging, and 18 of the tubes in steam generator 2E0-88 were stabilized prior to plugging. Additional details of the inspections of the Unit 2 steam generators are provided in section 1.4 of this report

On January 31, 2012, Unit 3 control room operators received an alarm that indicated a primary-to-secondary reactor coolant leak from steam generator 3E0-88. The alarm received was from the main condenser air ejector radiation monitors, which continuously samples from a vent line for the purpose of rapidly identifying steam generator tube leaks. Although the leak rate was small, it increased enough in a short period of time for the licensee to perform a rapid shutdown. The estimated leak rate was 75 gallons per day. The facility license allows full power operation with a steady state leak rate of less than 150 gallons per day. On February 2, 2012, Unit 3 reached cold shutdown conditions. The licensee reviewed the amount of gaseous radioactivity released and estimated a dose of approximately 0.0000452 mrem to a member of the public. The annual regulatory limit to a member of the public is 100 mrem per year. This unplanned offsite release of radioactivity was reviewed by Region IV health physicist inspectors who confirmed SONGS' offsite dose estimate (see Section 10 for additional details).

After shutdown, the licensee started preparations for performing inspections of Unit 3 steam generators 3E0-89 and 3E0-88. The steam generator tube inspections commenced on February 12, 2012, and confirmed the location of the leak in steam generator 3E0-88 as coming from the tube in Row 106 Column 78. No other tubes were found to be leaking. The licensee then performed eddy current inspections of 100 percent of the tubes in both Unit 3 steam generators. During these inspections, the licensee discovered unexpected wear in both steam generators, including wear at retainer bars (similar to the wear found in Unit 2 steam generators) and significant tube-to-tube wear in the freespan areas (u-bend area of the tubes). The inspections identified 56 tubes in steam generator 3E0-89 and 73 tubes in steam generator 3E0-88 that SCE performed in-situ pressure testing on to determine if they met the structural integrity requirements in plant technical specifications. Additional details of the inspections of the Unit 3 steam generators are provided in section 1.5 of this report

From March 13 – 21, 2012, AREVA conducted in-situ pressure testing of the suspect tubes in both steam generators. There were a total of eight tube failures during testing, all in steam generator 3E0-88.

These tubes failed to satisfy the tube integrity performance criteria in the technical specifications. Additional details of the in-situ pressure tests are provided in Section 1.6 of this report.

From March 19 – 29, 2012, the NRC augmented inspection team performed inspections onsite at SONGS.

On March 27, 2012, the NRC issued a Confirmatory Action Letter to SCE, which outlined specific actions for each unit that the licensee must complete before restarting Unit 2 and Unit 3.

A more detailed sequence of events can be found in Attachment 2.

1.2 System Descriptions

a. Replacement Steam Generators

The Unit 2 and Unit 3 replacement steam generators contain thermally treated Alloy 690 tubing in a u-bend configuration, with a nominal outside diameter of 0.750 inches and a nominal wall thickness of 0.043 inches. There are 9727 tubes within each steam generator, which are arranged in 142 rows and 177 columns. The rows and columns are arranged in a nominal 1.000 inch triangular pitch (results in approximately 0.25 inches of clearance between tubes). The first thirteen rows of tubes were thermally stress relieved after bending to reduce susceptibility to stress corrosion cracking. The tubes were hydraulically expanded to the full depth of the tubesheet, which has a nominal thickness of 28.19 inches. Seven tube support plates made of Type 405 stainless steel provide lateral support to the tubes. The tube support plates contain broached trefoil holes with chamfered lands. Support of the tubes in the upper bundle is provided by six sets of Type 405 stainless steel, V-shaped, anti-vibration bars.

The original Model 3410 steam generators at Unit 2 and Unit 3 were manufactured by Combustion Engineering. Each steam generator had 9,350 mill-annealed, Alloy 600 tubes, which were a combination of u-bend tubes and tubes with two 90 degree bends (also called square bends). The tubes had a nominal outside diameter of 0.750 inches, and a nominal wall thickness of 0.048 inches. The tubes were expanded through the full depth of the tubesheet using an explosive process, and lateral support was provided by a number of lattice-grid (i.e., eggcrate) carbon steel tube supports. Tube support in the upper bundle was provided by carbon steel diagonal bars (commonly called batwings) and vertical straps. The original steam generators contained a cylindrically shaped support structure beneath the center of the tubesheet (called the stay cylinder) that provided structural support to the large diameter tubesheet.

Southern California Edison reviewed Information Notices, Generic Letters, Bulletins, and industry operational experience associated with steam generator issues when developing the design specifications for the replacement steam generators. Some of the changes are summarized below, for additional information see Section 6 of this report.

The design changes between the original and replacement steam generators noted above are commonly used in replacement steam generators today. The thermally

treated Alloy 690 tubing provides increased resistance to stress corrosion cracking as compared to thermally treated Alloy 600 tubing. The use of type 405 stainless steel (in lieu of carbon steel) for tube support plates eliminates the denting phenomenon associated with drilled carbon steel support plates. The use of broached trefoil holes (instead of drilled holes) in tube support plates reduces the number of contact points with tubes and increases flow area between the tube and tube support plate, thereby reducing the potential for corrosion products to buildup between the tube and the tube support plate. Combustion Engineering steam generators with the batwing design have typically suffered from wear on tubes (from the batwings) in the central stay cylinder region, due to higher cross flow velocities in this portion of the steam generators. In an effort to eliminate this high flow region, the replacement steam generators were designed with a thicker tubesheet that was inherently more rigid, and thus did not require the central stay cylinder. By choosing a design with all u-bend tubes, the bat wing design was eliminated and a new anti-vibration bar assembly was used. The new anti-vibration bar assembly is a free floating design that is supported by the tube bundle and is not attached to the tube bundle wrapper.

b. Channel Head-to-Divider Plate Weld

On March 18, 2009, after completion of the primary and secondary side hydrostatic pressure tests, a crack in the weld between the divider plate and the channel head on Unit 3 steam generator 3E0-88 was identified . Examination showed that the dissimilar metal weld, between the Alloy 690 divider plate and the low alloy steel channel head, had separated. Specifically, the failure occurred between the channel head and the Alloy 152 butter weld, which is the weld filler wire equivalent of Alloy 690. Upon examination, a similar weld failure was found in steam generator 3E0-89 although the size of the failure was not as large.

Mitsubishi performed a root cause evaluation and found that air carbon-arc gouging was used to remove the stainless steel cladding from the channel head, in preparation for making the divider plate-to-channel head dissimilar metal weld. The air carbon-arc gouging had resulted in carbon deposits in the channel head that were not completely removed by grinding that was performed after the gouging operation. The high carbon area increased the hardness of the channel head (due to carburization) and was the most probable cause of the failure between the channel head and the Alloy 152 butter weld. Mitsubishi also found that it was possible, but less probable, that the increased hardness of the channel head promoted hydrogen induced cracking in areas of the divider plate-to-channel head weld that had higher local stresses due to geometric configurations (i.e., at the corner of the divider plate).

1.3 Resident Inspectors' Assessment of Steam Generator Tube Leak Event Response

a. Inspection Scope

On January 31, 2012, the resident inspectors were on-site during the Unit 3 steam generator tube leak event. The resident inspectors observed the licensee's response to the steam generator tube leak from the control room; and observed the rapid shutdown, actions to cool the plant down, actions performed during recovery of plant systems, and other operator actions. Additionally, the resident inspectors conducted a review of

control room activities and equipment response to determine if the operating crew responded appropriately and if the plant systems responded as expected during the event. The resident inspectors conducted interviews with various on-shift personnel and reviewed the post trip report, which included control room logs, operator statements, and plant data trends to assess overall performance of the crew. The review also included procedure use and adequacy of the guidance used for event response, placing the plant in a safe and stable condition, establishing appropriate parameter limits for plant cooldown, and conducting the cooldown to cold shutdown conditions. With respect to operator awareness and decision making, the resident inspectors were specifically focused on the effectiveness of control board monitoring, technical decision making, and work practices of the operating crew. With respect to command and control, the resident inspectors focused on actions taken by the control room supervision in managing the operating crew's response to the event.

b. Observations and Findings

No findings were identified.

The team identified one unresolved item for which additional information is required to determine if performance deficiencies exist or if the issue constitutes a violation of NRC requirements.

On January 31, 2012, at 3:05 p.m. (PST), main control room operators at Unit 3 received a secondary plant system radiation alarm associated with the air ejectors followed by a blowdown radiation monitor alarm. Operations personnel responded in accordance with Abnormal Operating Instruction SO23-13-14, "Reactor Coolant Leak," Revision 16, since the entry conditions for a steam generator tube leak were satisfied. Operations personnel determined the leakage to be about 75 gallons per day, using a mass balance calculation (.06 gpm), from steam generator 3E0-88. This leak rate was below the Technical Specification 3.4.13, "RCS Operational Leakage," limit of 150 gallons per day for primary- to-secondary leakage through any one steam generator.

At 4:10 p.m., operations personnel evaluated that the primary-to-secondary leak rate exceeded 75 gallons per day on steam generator 3E0-88 and that the leak was increasing at greater than 30 gallons per day per hour, and consequently, initiated a rapid power reduction to be ≤ 50 percent power in one hour and in Mode 3 within the next two hours per Abnormal Operating Instruction SO23-13-14. In accordance with Abnormal Operating Instruction SO23-13-14, when reactor power was less than 35 percent, operations personnel tripped the reactor at 5:31 p.m. to enter Mode 3.

Due to the manual reactor trip, operations personnel entered Emergency Operating Instruction SO23-12-1, "Standard Post Trip Actions," Revision 26, to ensure the plant was placed in a stable, safe condition, and that the plant was configured to respond to the continuing steam generator tube leak event. Operations personnel implemented the emergency operating instructions and isolated the affected steam generator at 6:00 p.m. A plant cooldown was conducted by using main steam bypass from steam generator 3E0-89 to the main condenser. Mode 4 conditions were achieved at approximately 6 hours after isolation of the steam generator. Cooldown continued until Unit 3 was in Mode 5, cold shutdown.

(1) Introduction: The team identified an unresolved item associated with Operations Procedure SO123-0-A8, "Trip/Transient and Event Review," that required a formal review of operator actions and safety systems to determine if important systems responded as design. The formal review was not completed.

Description: On March 19, 2012, the team requested to review the results of operations post trip/transient evaluation of the January 31, Unit 3 tube leak event. Operations Procedure SO123-0-A8, "Trip/Transient and Event Review," Revision 8, required a detailed post trip review following unplanned reactor trips. However, a formal trip/transient and event review was not available because operations personnel determined the Unit 3 event was planned and therefore a formal review was not required.

On March 27, 2012, Team met with operations personnel to discuss items on a draft Unit 3 trip/transient evaluation provided to the team. The team also discussed with operations personnel the requirements in Operations Procedure SO123-0-A8, and concluded a basis for what was "planned" and "unplanned" was not defined. Operations personnel determined the Unit 3 reactor trip was a planned reactor trip because Abnormal Operating Instruction SO23-13-14, "Reactor Coolant Leak," Revision 16, Section 4, had described actions for primary-to-secondary leakage. Specifically, this section stated, in part, under plant conditions of increasing steam generator tube leakage, operations personnel were required to perform a rapid power reduction to less than 35 percent power, then trip the reactor.

The team discussed with operations personnel that definitions for unplanned events have been established through industry standards to report on plant performance. These standards include NEI 99-02, "Regulatory Assessment Performance Indicator Guideline," Revision 6. Industry Guidance NEI 99-02 indicated that Unit 3 reactor trip should be considered unplanned since the reactor trip was required by an abnormal operating instruction and would count against the performance indicator for unplanned reactor trips. NRC Regulatory Issue Summary (RIS) 2000-08, "Voluntary Submission of Performance Indicator Data," Revision 1, allows industry to use NEI 99-02 to report performance indicator data.

Additional review and follow up will be required to review the corrective actions associated with the procedural guidance for an event review and then determine whether this issue represents a performance deficiency or constitutes a violation of NRC requirements. This issue is identified as URI 05000362/2012007-01, "Adequacy of the Trip/Transient and Event Review Procedure."

c. Conclusions

The resident inspectors concluded that abnormal and emergency operating instructions were performed consistent with expected standard and that operations personnel exhibited the fundamental operator competencies in response to the Unit 3 steam generator tube leak.

Specifically, the resident inspectors determined that the operating crew displayed a questioning attitude of changing plant parameters and took conservative actions. The operating crew identified important preliminary increasing trends of Unit 3 air ejectors radiation monitors and subsequent alarms in a timely manner for a tube leak in steam generator 3E0-88. Additionally, the resident inspectors determined that crew supervision exercised effective oversight of plant status, crew performance, and control room command and control.

The team identified one unresolved item associated with the adequacy of the trip/transient procedure.

1.4 Description of Steam Generator Inspections at SONGS Unit 2

On January 10, 2012, SONGS Unit 2 was shutdown for a refueling outage. Southern California Edison personnel conducted a scheduled steam generator inspection in accordance with Technical Specification 5.5.2.11, "Steam Generator (SG) Program." This was the first inspection of the Unit 2 steam generators since their replacement in January 2010. The accumulated operating time on the replacement Unit 2 steam generators was 1.7 effective full power years. There was no reported primary-to-secondary leakage at the time of shutdown.

The scope of the inspection included a 100 percent tube sample with an eddy current test bobbin probe over the full tube length, followup rotating coil inspections at special interest locations, and a secondary side foreign object search and retrieval. Three types of flaw indications were found in the tubes:

- Wear at the tube support plate and anti-vibration bar supports
- Wear caused by a loose part
- Wear at retainer bars

With the exception of the wear indications found at tube retainer bar locations, the wear indications found are similar to those found at other replacement steam generators after one cycle of operation. A total of 2411 tubes were found with indications at the tube support plates and anti-vibration bar supports, the vast majority of which had a measured depth of less than 20 percent of the tube wall thickness. Only two of these indications, located at the anti-vibration bar supports, exceeded the Technical Specification 5.5.2.11.c repair limit of 35 percent of the tube wall thickness. The two affected tubes plus two additional tubes with 31 percent deep indications were stabilized and plugged.

Southern California Edison performed a reanalysis of the bobbin probe eddy current data collected during the Unit 2 inspection program. This reanalysis was performed after the finding of the long free-span indications in Unit 3, allowing insights gained during the Unit 3 inspections to be applied to the Unit 2 data. The scope of this reanalysis was a "box" of 1000 tubes in each Unit 2 steam generator which bounded the region of tubing affected by the instability damage in Unit 3. This reanalysis~~, using the bobbin probe,~~ confirmed the results of the original analysis and did not identify any tube-to-tube wear.

Two tubes were found with indications (less than 35 percent through wall) caused by a small loose part on the secondary side. This loose part was removed from the steam generator. Metallurgical analysis indicated the loose part was a piece of weld metal, most likely introduced during steam generator manufacturing operations. The two affected tubes were left in service.

Six tubes were found with indications at retainer bar intersections. The retainer bars are part of the support structure for the anti-vibration bars and are a unique feature of steam generators manufactured by Mitsubishi. The measured indication depths ranged from 28 to 90 percent of the tube wall thickness. Because of the short measured lengths of these flaws, only the 90 percent indication was in-situ pressure tested as part of condition monitoring. The affected tube was successfully pressurized to 5300 psi with no leakage, confirming that the Technical Specification 5.5.2.11.b.1 structural integrity performance criteria were met. Mitsubishi attributed the cause of these indications to retainer bar vibration, the potential for which had not been evaluated during design (see Section 4 of this report for additional details). Fort Calhoun is the only other domestic plant with Mitsubishi steam generators. The retainer bars at Fort Calhoun are significantly stiffer than at SONGS.

The six tubes with retainer bar indications have been plugged and stabilized. In addition, the remaining 182 tubes (total for both Unit 2 steam generators) that intersect the retainer bars were plugged as a preventive measure. Twenty four of these tubes were stabilized prior to plugging to ensure that all 188 plugged tubes will not sever due to continued vibration of the retainer bar. The tubes that were stabilized are strategically located at each end and center of the retainer bars.

Detailed plans for returning Unit 2 to service are still under development. Short-term plans relating to Unit 2 included conducting a full u-bend examination of 1375 tubes in both steam generators using a rotating coil. The tube sample was intended to bound the region affected by free-span wear seen in Unit 3 by significant margin. The rotating coil provides a slightly more sensitive inspection for long free-span wear scars than the bobbin probe. These inspections were performed subsequent to the team's site visit and identified two tubes in Unit 2 steam generator 2E0-89 with shallow free-span wear in the u-bend region. These indications both measured approximately 14 percent deep, and were located in the same region of the bundle affected by free-span indications in the Unit 3 steam generators.

The tube wear data for Unit 2 is shown below.

**SONGS Unit 2 Steam Generators**

**Wear Depths Summary**

| Steam Generator SG2E88 (Through-Wall Wear) | Anti-Vibration Bar | Tube Support Plate | U-Bend Freespan | Retainer Bar | Foreign Object | Total Indications | Tubes with Indications |
|---|---|---|---|---|---|---|---|
| ≥ 50% | 0 | 0 | 0 | 1 | 0 | 1 | 1 |
| 35 - 49% | 2 | 0 | 0 | 1 | 0 | 3 | 3 |
| 20 - 34% | 86 | 0 | 0 | 0 | 2 | 86 | 74 |
| 10 - 19% | 705 | 108 | 0 | 0 | 0 | 813 | 406 |
| TW < 10% | 964 | 117 | 0 | 0 | 0 | 1081 | 600 |
| TOTAL | 1757 | 225 | 0 | 2 | 2 | **1984** | **734*** |

| Steam Generator SG2E89 (Through-Wall Wear) | Anti-Vibration Bar | Tube Support Plate | U-Bend Freespan | Retainer Bar | Foreign Object | Total Indications | Tubes with Indications |
|---|---|---|---|---|---|---|---|
| ≥ 50% | 0 | 0 | 0 | 1 | 0 | 1 | 1 |
| 35 - 49% | 0 | 0 | 0 | 1 | 0 | 1 | 1 |
| 20 - 34% | 78 | 1 | 0 | 3 | 0 | 82 | 67 |
| 10 - 19% | 1014 | 85 | 2 | 0 | 0 | 1101 | 496 |
| TW < 10% | 1499 | 53 | 0 | 0 | 0 | 1552 | 768 |
| TOTAL | 2591 | 139 | 2 | 5 | 0 | **2737** | **861*** |

*This value is the number of tubes with wear indications of any depth and at any location. Since many tubes have indications in more than one depth and location, the total number of tubes is less than the total number of indications.

## 1.5 Description of Steam Generator Inspections at SONGS Unit 3

After shutdown, the licensee started preparations for performing inspections of Unit 3 steam generators 3E0-89 and 3E0-88. The steam generator tube inspections commenced on February 12, 2012, and confirmed the location of the leak in steam generator 3E0-88 as coming from the tube in Row 106 Column 78. The leak was located 2 inches beyond anti-vibration support number 4 on the hot leg side. It was found to be associated with a long (approximately 30 inches) free-span flaw indication. No other tubes were found to be leaking.

The licensee then performed eddy current inspections of 100 percent of the tubes, full length, in both Unit 3 steam generators with a bobbin probe. The bobbin probe examinations were supplemented by rotating coil examinations to confirm, characterize,

and size the indications found by the bobbin probe. These examinations identified over 160 tubes in each steam generator with long free-span indications similar to that found on the leaking tube. In each steam generator, the tubes containing the free-span indications were grouped together in a tightly packed zone near the center of the tube bundle. The free-span indications were located on the upper and/or lower sides (i.e., the extrados and intrados) of the u-bend. Thus, a given free-span indication on the extrados of one tube tended to be matched by a similar indication on the intrados of the adjacent higher row tube located in the same tube column. This pattern provided early evidence to SCE personnel that the free-span indications were wear flaws due to tube-to-tube contact from motion of the u-bends within the plane of the u-bends. More than half of the free-span indications in each steam generator had maximum measured depths exceeding the 35 percent plugging limit in the technical specifications, and ranged to as much as 99 percent (for the non-leaking tubes).

Over 460 tubes in each steam generator were found with wear indications at the tube support plates. In general, tubes exhibiting the free-span wear indications tended to exhibit tube support plate indications with the highest depth measurements, typically with the deepest values at the seventh tube support plate and trending down at successively lower support levels. Approximately 170 tubes in each steam generator exhibited indications at the tube support plates that exceeded the 35 percent plugging limit, with maximum depths ranging to 70 percent.

Approximately 800 tubes in steam generator 3E0-88 and 900 tubes in steam generator 3E0-89 exhibited wear indications at the anti-vibration bar supports. Most of these measured less than 20 percent deep, and only 2 indications exceeded the 35 percent plugging limit. For tube indications at anti-vibration bars in tubes not exhibiting free-span u-bend indications, the length of the wear indications was confined to within the width of the anti-vibration bars. For tubes that exhibited free-span indications, many of these tubes had wear indications at the anti-vibration bars that extended outside the width of the anti-vibration bars which indicated in-plane movement of these tubes in the u-bend area.

Four tubes were found with indications at retainer bar intersections, with measured depths ranging from 28 to 46 percent. At the time of the team's presence at the site, planned corrective actions with respect to tubes adjacent to the retainer bar were similar to those completed for Unit 2. The four tubes with retainer bar indications were plugged and stabilized. In addition, the remaining 184 tubes (total for both Unit 3 steam generators) that intersect the retainer bars were plugged as a preventive measure. Twenty four of these tubes were stabilized prior. The tubes that were stabilized are strategically located at each end and center of the retainer bars.

Tube wear data for Unit 3 is shown below.

**SONGS Unit 3 Steam Generators**
**Wear Depths Summary**

| Steam Generator SG3E88 (Through-Wall Wear) | Anti-Vibration Bar | Tube Support Plate | Tube-to-Tube Wear | Retainer Bar | Foreign Object | Total Indications | Tubes with Indications |
|---|---|---|---|---|---|---|---|
| ≥ 50% | 0 | 117 | 48 | 0 | 0 | 165 | 74 |
| 35 - 49% | 3 | 217 | 116 | 2 | 0 | 338 | 119 |
| 20 - 34% | 156 | 506 | 134 | 1 | 0 | 797 | 197 |
| 10 - 19% | 1380 | 542 | 98 | 0 | 0 | 2020 | 554 |
| TW < 10% | 1818 | 55 | 11 | 0 | 0 | 1884 | 817 |
| TOTAL | 3357 | 1437 | 407 | 3 | 0 | 5204 | 919* |

| Steam Generator SG3E89 (Through-Wall Wear) | Anti-Vibration Bar | Tube Support Plate | Tube-to-Tube Wear | Retainer Bar | Foreign Object | Total Indications | Tubes with Indications |
|---|---|---|---|---|---|---|---|
| ≥ 50% | 0 | 91 | 26 | 0 | 0 | 117 | 60 |
| 35 - 49% | 0 | 252 | 102 | 1 | 0 | 355 | 128 |
| 20 - 34% | 45 | 487 | 215 | 0 | 0 | 747 | 175 |
| 10 - 19% | 940 | 590 | 72 | 0 | 0 | 1602 | 450 |
| TW < 10% | 2164 | 94 | 1 | 0 | 0 | 2259 | 838 |
| TOTAL | 3149 | 1514 | 416 | 1 | 0 | **5080** | **887*** |

*This value is the number of tubes with wear indications of any depth and at any location. Since many tubes have indications in more than one depth and location, the total number of tubes is less than the total number of indications.

## 1.6 In-Situ Pressure Testing

Technical Specification 5.5.2.11.a for SONGS Units 2 and 3 requires that a condition monitoring assessment be performed during each outage that the steam generator tubes are inspected or plugged to confirm that the tube integrity performance criteria are being met. These performance criteria include specific requirements for tube structural integrity and accident induced leakage. The limiting structural criterion applicable to the SONGS Units 2 and 3 is the normal steady state pressure differential across the tubes times a safety factor of three. The limiting accident induced leakage criterion is 0.5 gpm per steam generator.

Typically, the requirement for performing condition monitoring is satisfied by analyzing eddy current flaw indications relative to screening criteria that are functions of measured flaw depth, length, and/or eddy current voltage response. These screening criteria are

conservative relative to the performance criteria since they make allowance for eddy current measurement error, uncertainties with respect to voltage correlations with flaw depth and burst strength, and material property variability. When these screening criteria are exceeded, in-situ pressure tests may be performed for tubes not meeting the screening criteria to confirm that the performance criteria are met for these tubes. In-situ pressure test procedures at SONGS and the screening criteria for selecting tubes to be tested were in accordance with Electrical Power Research Institute Report 1014983, "Steam Generator In-Situ Pressure Test Guidelines," Revision 3.

At Unit 2, one tube with a measured 90 percent deep indication at a retainer bar location was determined to be outside the screening criteria and was in-situ pressure tested. For Unit 3, an optional strategy to the screening criteria approach was taken in accordance with the Steam Generator In-Situ Pressure Test Guidelines, Appendix A. The Appendix A approach is a statistically based Monte Carlo approach that samples the uncertainty distributions associated with each of the input parameters for calculating tube burst pressure. This methodology selects all tubes determined to have a 0.95 probability or less of meeting the limiting structural integrity performance criterion. Application of this methodology led to selection of 129 tubes on Unit 3 for in-situ pressure testing, 73 tubes in steam generator 3E0-88 and 56 tubes in steam generator 3E0-89.

The in-situ pressure tests were performed under ambient conditions. Therefore the test pressures were adjusted upward from actual values under hot conditions to account for the increased yield and ultimate strength of the tube material under ambient conditions. The test pressures (with correction factors added) corresponding to normal operating conditions, main steam line break, and three times normal operating pressure differential were 1850 psi, 3200 psi, and 5300 psi, respectively.

The test procedure involved pressurizing the subject tube at a rate not to exceed 200 psi/sec to each test point. At each test point, pressure was held constant for two minutes if the tube was not leaking. If the tube was leaking, pressure was held constant for five minutes before ramping to the next test pressure.

The tube with a 90 percent deep retainer bar indication in Unit 2 was successfully tested to 5300 psi with no leakage. This demonstrated that all performance criteria were met for this tube. For Unit 3, 136 of the 144 tubes were successfully tested to 5300 psi with no leakage, demonstrating that these tubes met the performance criteria. The remaining eight tubes "failed" prior to reaching 5300 psi. Failure in this context means that leakage occurred in excess of the 4.5 gallons per minute pump capacity during the test, and test pressure could not be maintained. All eight tubes that failed were in steam generator 3E0-88. All tubes tested in steam generator 3E0-89 passed with no leakage.

Table 1 summarizes the in-situ pressure test results for the eight tubes that failed the test. Three of the eight tubes failed at or below the test pressure corresponding to main steam line break differential pressure. The tube that leaked causing shutdown of SONGS Unit 3 (row 106, column 78) exhibited the lowest failure pressure, 2874 psi. The three tubes that failed at or below main steam line break pressure failed to meet the accident leakage performance criteria as well as the structural integrity performance

criteria. The other five tubes met the accident leakage criteria, but failed to meet the structural criteria.

Prior to being tested to failure, the tube that leaked during operation (row 106, column 78) exhibited a measured leak rate of 0.072 gallons per minute at a test pressure corresponding to normal operating conditions. This compares with a leak rate of 0.06 gallons per minute measured by SCE operating staff for SONGS Unit 3 when they made the decision to shut the plant down. The reported operational leakage was evaluated based on ambient conditions. Both the operational and test measurements are less than the applicable technical specification limit of 0.1 gallons per minute.

Table 1 – SONGS 3 In-Situ Pressure Test Results

| SG | Row | Column | Leak Rate at Normal Operating Conditions (gpm) | Leak Rate at Main Steam Line Break (gpm) | Failure Pressure (psi) |
|---|---|---|---|---|---|
| 88 | 106 | 78 | 0.072 | >0.5 | 2874 |
| 88 | 102 | 78 | 0 | >0.5 | 3268 |
| 88 | 104 | 78 | 0 | >0.5 | 3180 |
| 88 | 100 | 80 | 0 | >0.5 | 4732 |
| 88 | 107 | 77 | 0 | >0.5 | 5160 |
| 88 | 101 | 81 | 0 | >0.5 | 4889 |
| 88 | 98 | 80 | 0 | >0.5 | 4886 |
| 88 | 99 | 81 | 0 | >0.5 | 5026 |

## 2.0 Probable Cause Evaluation (Charter Item 2)

While the team was on-site, both SCE and Mitsubishi were in the process of conducting cause evaluations for the tube ~~failures~~failure and unexpected wear of steam generator tubes in Unit 3. As part of both evaluations, actions were being taken to understand the differences between Unit 2 and 3 steam generators. The cause evaluations were not complete and were undergoing changes while the Augmented Inspection Team was onsite; however, SCE did subsequently complete their cause evaluation prior to the team's exit meeting. The team did a detailed review of the completed cause evaluation.

2.1 SCE Cause Evaluation

a. Inspection Scope

The team conducted an overall and independent review of SCE's actions taken to understand the probable cause for the steam generator tube degradation. The team reviewed the updated final safety analysis report, technical specifications, design basis documents, original steam generator design, replacement steam generator design, purchase order specifications, design changes, manufacturing changes, nonconformance reports, supplier deviation reports, and interviewed personnel. The review included understanding the licensee's criteria for determining the cause, or if one could not be determined, the most probable cause.

b. Observations and Findings

No findings were identified.

The team participated in discussions with the licensee's cause analysis team and noted that the licensee employed various root cause evaluation techniques. These included a change analysis technique that compared design differences and a problem analysis technique relying on a systematic process that looked at the causal effects and risk assessments of possible causes. The team reviewed the licensee causal analysis summary that assigned a ranking of highly probable to unlikely.

In the area of thermal hydraulic analysis the licensee contracted AREVA to verify the accuracy of Mitsubishi's thermal-hydraulic code (FIT III) used during the design of the replacement steam generators, by comparing it to ATHOS, a thermal-hydraulic code developed by the Electric Power Research Institute (EPRI). In addition, SCE contracted Westinghouse to perform a completely independent analysis using a Westinghouse modified ATHOS thermal-hydraulic code. AREVA also performed independent flow induced vibration analyses. The licensee brought on board MPR associates and numerous other technical experts, including a world renowned expert in flow induced vibration, to assist in the cause assessment. The team observed that SCE preliminary causal analysis was generally consistent with that of Mitsubishi. Initially, the licensee reviewed the following cause contributors:

- Departure from original steam generator u-bend/anti-vibration bar configuration - highly probable
- Departure from original steam generator stay cylinder configuration - possible
- Departure from original steam generator tube support plate configuration - possible
- Replacement steam generator anti-vibration bar structure too flexible - possible
- Additional 300 rotations of Unit 3 replacement steam generator due to divider plate repair work - possible
- Thermal-hydraulic and flow induced vibration models used in replacement steam generator design incorrectly predicted replacement steam generator tube bundle behavior – possible

The team observed that the licensee performed a detailed analysis and attempted to

address all probable causes. The team observed that some of the conditions which were eliminated as potential contributors may need further evaluation. In particular, the team determined that the only major difference between Units 2 and 3 was the divider plate repair to both Unit 3 steam generators. This difference had been discounted by both SCE and Mitsubishi. The divider plate is further discussed in Section 12.0 of this report.

~~c. Conclusions~~

The completed SCE cause evaluation identified the mechanistic cause of the tube-to-tube wear as fluid-elastic instability caused by a combination of localized high steam/water velocity, high steam void fraction, and insufficient contact forces between the anti-vibration bars and the tubes.

c. Conclusions

The team independently concluded that the combination of higher than predicted thermal-hydraulic conditions and insufficient contact forces in the upper tube bundle caused the fluid-elastic instability vibration.

2.2 Mitsubishi Cause Evaluation

a. Inspection Scope

The team conducted an overall and independent review of Mitsubishi's actions taken to understand the probable cause of the steam generator tube degradation. While onsite, the inspection team was informed that Mitsubishi was performing a failure analysis to characterize the mechanism causing the tube-to-tube wear condition in Unit 3. The team had periodic discussions with Mitsubishi personnel to gather information on the probable causes under consideration. The team reviewed information contained in the updated final safety analysis report, technical specifications, design basis documents, purchase order specifications, design changes, design drawings, manufacturing changes, nonconformance reports, and supplier deviation reports to understand the design and fabrication of the replacement steam generators and independently assess the information obtained from Mitsubishi's in-progress cause evaluation.

b. Observations and Findings

No findings were identified.

The team determined that Mitsubishi was performing a thorough evaluation of the failure mechanism leading to the tube-to-tube wear in Unit 3. The team noted that Mitsubishi gathered factual information about the design, fabrication, and operation of the replacement steam generators in Unit 2 and Unit 3 to understand the differences between these components and identify potential contributing causes. The team discussed the preliminary failure mechanism theory with Mitsubishi personnel, who attributed the tube-to-tube; wear to a combination of design, fabrication, and operational factors.

Mitsubishi's preliminary explanation of the failure mechanism started with the combination of two factors: (1) a relatively small tube pitch to tube diameter ratio (P/D), and (2) high void fraction in the tube bundle area where the tube-to-tube wear was identified. The small pitch to diameter ratio was a fixed parameter in the replacement steam generators established by the nominal center-to-center distance between adjacent tubes (P) and the nominal outside diameter of the tubes (D). The high void fraction was identified from the results of Mitsubishi's thermal-hydraulic model for the secondary side of the replacement steam generators. Mitsubishi considered that the combination of these two factors may have resulted in favorable conditions for in-plane tube vibration based, in part, on the results of recent studies in fluid-elastic instability.

Additionally, Mitsubishi identified that the Unit 3 replacement steam generators had better dimensional controls during the fabrication process. This determination was based, in part, on the results of pre-service and in-service eddy current examinations, and fabrication data from Unit 2 and Unit 3 replacement steam generators. The correlation of dimensional controls with the failure mechanism was that improved dimensional controls for Unit 3 replacement steam generators resulted in less variability of as-built critical dimensions such as anti-vibration bar thickness, tube roundness, and gaps between tubes and anti-vibration bars.

The failure mechanism model also considered a fluid dynamic effect associated with the spreading of the tubes in the U-bend region during normal operating conditions. This effect was informally referred to as "flowering," due to the characteristic shape in which the tube bundle spreads transverse to the plane of the u-bends at normal operating conditions. "Flowering" was described as the elastic deformation of the anti-vibration bar structure and the tube bundle in the U-bend region, as a result of thermal expansion and fluid dynamic pressure acting on the secondary side of the tubes (see figure below). The deformation caused by the "flowering" effect was believed to result in multiple areas of no contact between the anti-vibration bars and the tubes, which minimized resistance to in-plane motion of the u-bend area of the tubes.

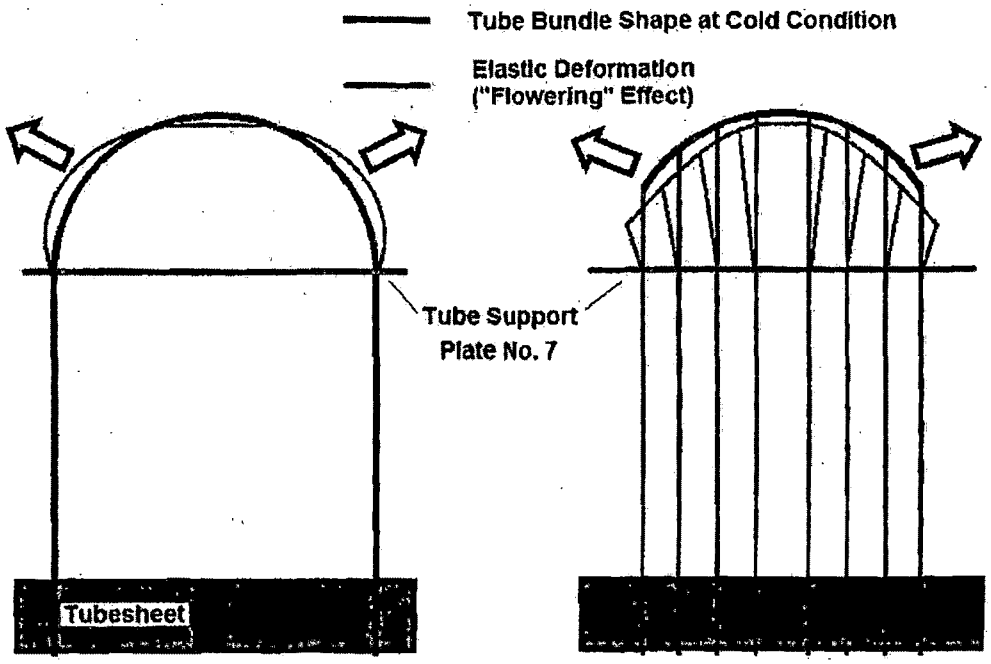


Description of "Flowering" Effect (Conceptual Drawing – For Illustration Purposes Only)

Mitsubishi considered that the collective contribution of the factors described above resulted in conditions in the U-bend that were highly susceptible to excessive tube vibration. The in-plane vibration of the tubes in the U-bend region allowed direct contact between free-span sections of the tubes, resulting in the unanticipated tube-to-tube wear.

At the conclusion of the onsite portion of this inspection, Mitsubishi was further evaluating the failure mechanism by conducting in-depth analyses of available data to validate their failure mechanism theory. One of the analyses included analytical studies of the impact of anti-vibration bar gap size, free-span length, fluid-elastic vibration, and contact forces on tube wear depth. An expected outcome of this analysis was that contact forces and the number of inactive supports should be the biggest contributors to wear under fluid-elastic instability conditions. Additionally, Mitsubishi was conducting further analytical studies of the "flowering" effect by modeling multiple cases of elastic displacement of the tube bundle structure, taking into consideration thermal expansion and dynamic pressures. Concurrent with these analyses, Mitsubishi was studying the effect of manufacturing dispersion on tube wear. Specifically, Mitsubishi was modeling multiple cases of manufacturing variability to study the influence of different dimensional controls on gap and contact forces. Mitsubishi was using as-built data as well as manufacturing tolerances to statistically assess the impact of dimensional controls on the resulting gaps and contact forces in different areas of the tube bundle. Based on the data reviewed by the team, the standard deviation of the tube ovality (G-value) decreased during each successive fabrication run of the steam generator tubes (order of tube fabrication -> U2E0-89, U2E0-88, U3E0-89, and U3E0-88). One of the expected

outcomes of this analysis was that manufacturing variability in Unit 3, in combination with the "flowering" effect, would result in a reduction of contact forces in Unit 3 relative to those in Unit 2. During the on-site portion of this inspection, the results of these studies were not finalized and additional failure analysis tasks were scheduled to accurately characterize the failure mechanism and support the cause determination.

c. Conclusions

At the time of the exit, Mitsubishi was still completing their independent cause analysis. ~~The team was unable to evaluate this aspect; however~~As part of the Confirmatory Action Letter inspection, the final Mitsubishi cause evaluation will be reviewed ~~as part of the Confirmatory Action Letter inspection. No conclusions were reached with regard to the Mitsubishi cause evaluation at this time.~~

3.0 Operational Differences in Configuration and Operation between Unit 2 and 3 (Charter item 3)

a. Inspection Scope

The team reviewed Unit 2 and 3 Cycle 16 operational data records found in operator logs and the plant computer system. The team focused on differences in configuration and operation between Units 2 and 3. The team evaluated full power operational data between Unit 2 and Unit 3 steam generators after each were replaced. From this data the team compared key plant parameters and other indications such as temperature, flow, power, pressure, and vibration and loose parts monitoring alarms. The team reviewed operational differences between Units 2 and 3 in order to gain information and to assess if these differences could have had an impact on the observed differences in the steam generator tube wear between the units.

b. Observations and Findings

No findings were identified.

The team identified one unresolved item for which additional information is required to determine if a performance deficiency exists or if the issue constitutes a violation of NRC requirements. The team also modeled the impact of operational differences on the predicted thermal-hydraulic response of the steam generators.

(1) Introduction: The team identified an unresolved item associated with the number of valid vibration and loose parts alarms observed in Unit 3 steam generators compared to Unit 2 steam generators, during steady state conditions.

Description: During the review of operational differences between Unit 2 and 3 steam generators the team identified a significant difference in number of valid vibration and loose parts monitoring system alarms. The vibration and loose parts monitoring system was designed to provide continuous monitoring and conditioning of loose parts accelerometer signals. Two separate accelerometers were installed on each of the steam generators. The location of these instruments are on the steam generators' lower supporting structures and provide acoustic information

about loose parts impacts specifically on the reactor coolant or primary side of the steam generators. The vibration and loose parts monitoring system real time functions consist mainly of impact alarm validation of suspected loose part events and recording acoustic data. Long term vibration monitoring and loose part event trending were done by engineering personnel using recorded data.

Unit 3 returned to service in February 2011, and the resident inspectors noted a number of nuclear notifications associated with Unit 3 steam generators vibration and loose parts monitoring alarms. On January 20, 2012, prior to the Unit 3 tube leak, engineering personnel also identified this trend and documented in Nuclear Notification NN 201818719 this problem and assigned an action to do further evaluation. On February 3, 2012, engineering personnel sent two sets of alarm signatures to Westinghouse, which contained impact data on alarms for time periods of steady state operation (i.e., no major temperature changes). Westinghouse engineering personnel concluded that the acoustic signals picked up by the accelerometers were valid and similar in nature to acoustic signatures caused by thermal movement of a steam generator expected during changes in thermal conditions, such as plant startup or shutdown. However the data obtained and analyzed had been taken during steady state operations. The team noted that Unit 2 steam generators did not receive the same number and type of alarms during a similar period of steady state operations. Engineering personnel also compared hot leg temperature changes linked to Unit 3 operations from February 18, 2011, to January 31, 2012, and confirmed about 30 valid alarms during this period were not associated with thermal transients.

Additional review and follow up will be required of the vibration and loose parts monitoring system alarms, including evaluation and disposition of Unit 3 alarms and then determine whether this issue represents a performance deficiency or constitutes a violation of NRC requirements. This issue is identified as URI 05000362/2012007-02, "Evaluation of Unit 3 Vibration and Loose Parts Monitoring System Alarms."

(2) Operational Differences: The team performed a number of different thermal-hydraulic analysis of Units 2 and 3 steam generators. The output of the various analyses runs where then compared and reviewed to determine if those differences could have contributed to the significant change in steam generator tube wear. It was noted that Unit 3 ran with slightly higher primary temperatures, about 4°F higher than Unit 2. Other differences were noted in steam and feedwater flow but none of the differences were considered sufficient to significantly affect thermal hydraulic characteristics inside the steam generators. The different analyses included:

- Lower bounding thermal hydraulic analysis using the steam generator base design condition, where primary inlet temperature was 598°F, and an upper bound case where primary inlet temperature was 611°F as identified in Mitsubishi Document L5-04GA021, Revision 3
- Varying steam generator pressures from 833 to 942 psia
- Steam mass flow rates from 7.59 to 7.62 Mlbm/hr
- Primary loop volumetric flow rate from 102,000 to 104,000 gpm, and

- Recirculation ratio from 3.2 to 3.5.

c. Conclusions

The team identified one unresolved item associated with SCE's evaluation of the Unit 3 loose parts monitoring alarms.

The result of the independent NRC thermal-hydraulic analysis indicated that differences in the actual operation between units and/or individual steam generators had an insignificant impact on the results and in fact, the team did not identify any changes in steam velocities or void fractions that could attribute to the differences in tube wear between the units or steam generators. It should be noted that increases in primary temperature and steam generator pressures has the effect of reducing void fractions and peak steam velocities, which slightly decreases the conditions necessary for fluid elastic instability and fluid-induced vibration.

4.0 Design and Manufacturing Differences (Charter Item #4) (Mitsubishi Charter Item 1)

During the development of the charter, it was not known how SCE and Mitsubishi reviewed and approved design and manufacturing changes. During the inspection, it was identified that all design and manufacturing changes proposed by Mitsubishi required review and approval from a SCE representative. Based on this, it was determined that this area could be covered as one item.

a. Inspection Scope

The team interviewed licensee and Mitsubishi personnel involved in the design and fabrication of the replacement steam generators and reviewed information including nonconformance reports, design drawings, fabrication procedures, design changes, engineering evaluations, supplier deviation requests, and design specifications to identify conditions affecting quality that resulted in relevant design differences between the replacement steam generators. The team assessed whether these differences could be considered as contributing factors for the cause of the tube-to-tube wear issue in Unit 3. The team also reviewed Engineering Change Packages 800071702 and 800071703 for the Unit 2 and Unit 3 replacement steam generators, respectively, with emphasis on changes made to the design methodology described in the updated final safety analysis report for the original steam generators to verify that the evaluation was performed in accordance with licensee procedures and the provisions of 10CFR 50.59, "Changes, Tests, and Experiments."

b. Observations and Findings

No findings were identified.

The team identified two unresolved items for which additional information is required to determine if performance deficiencies exist or if the issues constitute violations of NRC requirements. The team also identified several observations related to the design, fabrication, and the engineering change package for the Unit 2 and Unit 3 replacement steam generators.

(1) Introduction: The team identified an unresolved item associated with the design of the retainer bars in Unit 2 and Unit 3 replacement steam generators.

Description: In February 2012, the licensee identified wear indications in Unit 2 replacement steam generators at the tube locations in contact with the retainer bars (see figure below). Some of the indications showed excessive wear with a maximum degradation of 90 percent through wall.

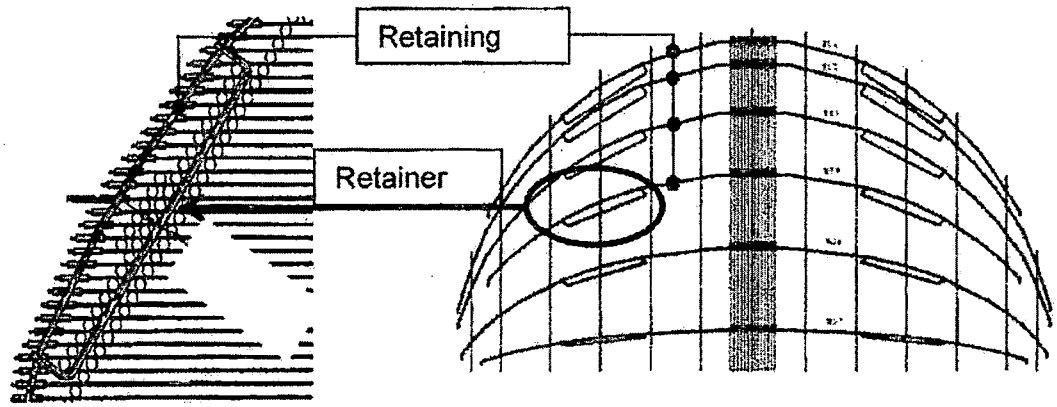


**Retainer Bar Design and Location of Affected Tubes (For Illustration Purposes Only)**

The team identified that the design of the replacement steam generators did not expect any potential vibration concerns in the area of the tube bundle where the retainer bars were located. The basis for Mitsubishi's design philosophy relied on the following factors:

- Based on the calculated natural frequency of the retainer bar, Mitsubishi considered that there would not be a resonant vibration condition relative to the flow conditions in the location of retainer bars.
- The vibration analysis of the tube bundle only considered out-of-plane vibration because in-plane vibration was not expected to be an operational concern for the retainer bars.
- The outermost tubes were considered the least susceptible to flow-elastic instability; therefore retainer bar locations were not included in the vibration analysis.
- Fluid-elastic instability was found not applicable to the retainer bar because this mechanism did not apply to a single tube in cross flow.
- Vortex-induced vibration was found not applicable to the retainer bar because it was considered a vibration mode applicable to a single cylinder in uniform cross flow in a large area and the flow condition around the retainer bars was considered slug-froth two phase flow.

However, upon identification of retainer bar-to-tube wear in Unit 2 replacement steam generators, Mitsubishi performed an evaluation to identify the cause of

excessive wear. The analysis considered three vibration mechanisms: fluid-elastic instability, vortex-induced vibration, and turbulence-induced vibration (random vibration). The analysis for turbulence-induced vibration determined that random vibration was the possible cause of the retainer vibration, based on the peculiar flow around the retainer bar, combined with the rather low natural frequency of the retainer bar. The analysis used the two phase flow conditions around the retainer bars and identified various modes of vibration at those flow conditions that could lead to retainer bar vibration and consequently to tube wear.

Additional review by the NRC is required following completion of the ~~Mitsubishi's~~licensee's cause evaluation to determine whether this issue represents a performance deficiency or constitutes a violation of NRC requirements. This issue is identified as URI 05000362/2012007-03, "Evaluation of Retainer Bars Vibration during the Original Design of the Replacement Steam Generators."

(2) Introduction: The team identified an unresolved item associated with the dimensional controls of critical dimensions throughout the fabrication of Unit 2 and Unit 3 replacement steam generators.

Description: Based on the information gathered by the team on the differences in dimensional controls of critical parameters in Unit 2 and Unit 3 replacement steam generators, the team determined that Mitsubishi did not consider the potential impact of improving dimensional controls for tube roundness and anti-vibration bars on the final tube bundle clearances at normal operating conditions.

Additional review by the NRC is required following completion of ~~Mitsubishi's~~the licensee's cause evaluation to fully assess how the dimensional controls contributed to the tube-to-tube wear in Unit 3 and then determine whether this issue represents a performance deficiency or constitutes a violation of NRC requirements. This issue is identified as URI 05000362/2012007-04, "Evaluation of Changes in Dimensional Controls during the Fabrication of Unit 2 and Unit 3 Replacement Steam Generators."

(3) Design Differences: The team did not identify any significant differences in the design requirements of Unit 2 and Unit 3 replacement steam generators. The "Conformed Specification for Design and Fabrication of the Replacement Steam Generators," also known as the design specification, contained identical technical requirements for Unit 2 and Unit 3 steam generators. All replacement steam generators were required to be designed, fabricated, and tested in accordance with the 1998 edition of the American Society of Mechanical Engineers (ASME) Boiler and Pressure Vessel Code, with the 2000 Addenda, industry standards, and NRC endorsed methods described in applicable regulatory guides. The licensee specified the same licensing requirements for all replacement steam generators.

The design specification also contained provisions to address technical or quality deviations from the requirements of the purchase order or the design specifications, including the disposition of "Repair" or "Accept as-is" conditions captured as non-conformance reports in Mitsubishi's quality assurance program and changes to documents previously approved by the licensee. This process was referred to as

"Supplier Deviation Request" and allowed the licensee to review and approve deviations from the approved design specifications. The team noted that changes affecting the specified design were submitted to SCE personnel for review and approval.

The team noted that the design specification established identical provisions for the design of the replacement steam generator components including the vessel, upper/lower shell, transition cone, tubesheet, channel head, divider plate, tube supports, tubing, steam nozzle, feedwater nozzle, primary nozzles, steam flow limiting device, moisture separators/dryers, feedwater distribution system, blowdown and sludge management, access/inspection ports, instrument/sampling taps, and loose part monitoring.

The design specification also established identical requirements for the service life and service environmental conditions of the replacement steam generators. The licensee also specified identical design loading, structural, and seismic requirements for all replacement steam generators. The design specification contained identical requirements for design transients under normal, upset, emergency, faulted, and test conditions.

Additionally, the performance requirements in the design specification were identical for each replacement steam generator, which included:

- Water Level Stability
- Circulation Ratio
- Moisture Carryover
- Steam Carryunder in the Downcomer Annulus
- Reactor Coolant Flow Rate
- Primary-To-Secondary Leakage
- Blowdown Capacity
- Thermal Rating
- Heat Transfer Surface Area
- Tube Plugging Margin
- Fouling Factor
- Overall Heat Transfer Coefficient
- Primary Side Design and Operating Pressure/Temperatures
- Secondary Side Design and Operating Pressures/Temperatures
- Primary Side Design and Operating Flows
- Secondary Side Design and Operating Flows
- Tube Material and Dimensions

The replacement steam generator design developed by Mitsubishi for SONGS Unit 2 and Unit 3 in accordance with the licensee's design specification was translated into the same set of design and fabrication drawings. The team noted that some as-built dimensions varied between Unit 2 and Unit 3 steam generators as a result of the divider plate weld repairs in Unit 3 and other manufacturing processes. However, these dimensional changes did not represent significant deviations from the original design specifications.

(4) Fabrication Differences: The team noted that the design specification contained the same general fabrication requirements for the Unit 2 and Unit 3 replacement steam generators. The design specification contained the methods required for fabrication, assembly, inspection, and testing of the replacement steam generators. The specification covered, in part, fabrication requirements for the channel head cladding, tube dimensions, tube wall thickness, tube bend radius, tube "ovality," tubesheet, tube-to-tubesheet joints, tube supports, tube bundle, machined gasketed surfaces, non-ASME steam generator internals, welding methods, post-weld heat treatment, and allowable welding materials. The specification also contained detailed requirements for inspections, tests, and examinations, which included examination methods and personnel qualification requirements.

The design specification also required the use of "Supplier Deviation Requests" to address technical or quality deviations from the requirements of the Purchase Order or the design specifications, including the disposition of "Repair" or "Accept as-is" conditions identified during the fabrication process and changes to fabrication documents previously approved by the licensee. The team noted that fabrication issues affecting the specified design were submitted to SCE personnel for review and approval.

Based on discussions with SCE and Mitsubishi personnel and the review of documentation about the fabrication history of Unit 2 and Unit 3 replacement steam generators, the team identified the differences listed below. At the conclusion of the onsite portion of this inspection, the differences between Unit 2 and Unit 3 steam generators as a result of the fabrication process were under consideration for the cause evaluation.

- Steam Dryer Assembly – During the fabrication of Unit 2 steam generator 2E0-89, Mitsubishi identified a nonconforming condition of the steam dryer assembly that included damaged locking plates of vane jacking devices, displaced bolts, and damaged vanes. The cause of this issue was determined to be inadequate evaluation and control of the design ~~within~~ regard ~~to~~ the capacity of the vane jacking devices to sustain all fabrication conditions. Specifically, the vane jacking devices failed to stay in the design position during multiple rotations of the steam generator assembly during fabrication. Mitsubishi corrected the condition, in part, by replacing all vane jacking devices and damaged vanes with a new design, which was also used in the fabrication of the Unit 2 steam generator 2E0-88, and Unit 3 steam generators 3E0-89 and 3E0-88. Additionally, Mitsubishi modified the assembly sequence of the steam dryers. For Unit 2 steam generator 2E0-89, the steam dryer vanes were assembled in-situ while the steam dryers for Unit 2 steam generator 2E0-88 and Unit 3 steam generators 3E0-88 and 3E0-89 were preassembled before installation in their final position.

- Drilling of Tubesheet Holes – The tubesheet holes in Unit 2 and Unit 3 steam generators where the tubes are inserted for final assembly were made with different drill bits. The Unit 2 steam generator tubesheets were drilled with uncoated drill bits. The Unit 3 steam generator tubesheets were drilled with

titanium-nitride coated drill bits, which improved the drill bit life and resolved tooling mark issues experienced in Unit 2.

- Transition Wrapper Welding – The welding of the transition wrapper was performed in different order for each unit. For Unit 2 steam generators, the transition wrapper was welded after the tubes and anti-vibration bars were installed. In Unit 3 steam generators, the transition wrapper was welded before the installation of tubes and anti-vibration bars.

- Cladding Removal Process for the Channel Head – The removal of the stainless steel clad weld from the interior surface of the channel head base metal in preparation for the divider plate weld (i.e. structural butter weld) was performed with different methods in Unit 2 and Unit 3 replacement steam generators. For Unit 2, Mitsubishi used a machining process to remove the cladding in both steam generators. In Unit 3, Mitsubishi used an air carbon-arc gouging process. This method resulted in separation of the butter weld during hydrostatic testing. The root cause evaluation concluded that the air carbon-arc gouging process left carbon deposits on the base metal. Gouging was followed by grinding which was designed to remove the heat affected zone and expected to completely remove the carbon deposits. However, the grinding process left carbon deposits behind, which resulted in the localized areas of high carbon and high base metal hardness due to carburization. The repair of the Unit 3 divider plate welds is addressed in further details in Section 12.0 of this report.

- Helium Leak Test – As part of the fabrication process, Mitsubishi performed a Helium-Nitrogen leak test on the secondary side of the replacement steam generators to check for leaks on the tube-to-tubesheet welds. For all steam generators, this test was performed after completion of the tube-to-tubesheet weld, but prior to the penetrant examination of the tube-to-tubesheet welds and final tube expansion. The leak tests for Unit 2 steam generators were performed at a higher pressure than Unit 3 steam generators. Additionally, the Unit 2 tests were performed using a temporary welded cap on top of the steam generator shell to enclose the secondary side, while a temporary clamped cap was used in Unit 3 steam generators. All tests required the same holding time before starting the test and the same leak rate acceptance criteria.

- Preliminary and ASME Section III Hydrostatic Tests – The number of hydrostatic tests performed in accordance with ASME Section III on the primary and secondary sides of the replacement steam generators varied between Units due to the results of the initial test in each steam generator. For each replacement steam generator, the hydrostatic tests were performed first on the primary side and then on the secondary side. Both Unit 2 steam generators met the acceptance criteria in the first hydrostatic test. However, during the first hydrostatic test on the secondary side of Unit 3 steam generator 3E0-89, Mitsubishi identified leakage through a tube-to-tubesheet weld that exceeded the ASME Code acceptance criteria. After repairs were completed to address the leakage, the hydrostatic tests were re-performed. Following the second set of hydrostatic tests on Unit 3 steam generator 3E0-89, cracking indications were

identified in the divider plate-to-channel head weld. After repairs were completed to address the divider plate weld cracks, a third set of hydrostatic tests were performed in Unit 3 steam generator 3E0-89. Since similar cracking indications of the divider plate weld were identified in Unit 3 steam generator 3E0-88, a second set of hydrostatic tests was performed in this steam generator after the divider plate weld was repaired.

Additionally, prior to each ASME Section III hydrostatic test, Mitsubishi performed a preliminary hydrostatic test of the primary and secondary side of the steam generators at design pressure to check for leakage at the feed pump, pressure filling line, temporary gaskets, and temporary seals. Therefore, each replacement steam generator received an equal number of preliminary and ASME Section III Hydrostatic Tests. The total numbers of hydrostatic tests for each steam generator are summarized below.

| **Number of Preliminary and ASME Section III Hydrostatic Tests** | | | |
|---|---|---|---|
| **Steam Generator** | **Primary Side** | **Secondary Side** | **Results** |
| 2E0-89 | 1 | 1 | Acceptance criteria met |
| 2E0-88 | 1 | 1 | Acceptance criteria met |
| 3E0-89 | 1 | 1 | Leakage detected in tube-to-tubesheet weld |
| | 1 | 1 | Divider plate weld separation weld identified |
| | 1 | 1 | Final – Acceptance criteria met |
| 3E0-88 | 1 | 1 | Divider plate weld separation weld identified |
| | 1 | 1 | Final – Acceptance criteria met |

- Pre-Service Inspection – The design specification established similar requirements for the pre-service eddy current examination of Unit 2 and Unit 3 replacement steam generators. The team noted that the eddy current examinations of Unit 2 and Unit 3 steam generators were performed with similar eddy current techniques, including essential variables. However, the circumstances in which the examinations were performed varied for each Unit. For Unit 2, the pre-service examination was performed after the steam generators were delivered at the SONGS jobsite. The steam generators were examined on the shipping saddles, where the position of the tube bundle was at 45 degrees from the gravity neutral position. This position was dictated by the location of the steam generator lifting trunnions which were installed on the upper shell at 45 degree orientation from the steam generator centerline. For Unit 3, the pre-service eddy current examination was performed at the Mitsubishi Kobe facility while the steam generators were still on the fabrication rollers and in the gravity neutral position (i.e. divider plate oriented horizontally). The decision to perform the Unit 3 pre-service examination at the Mitsubishi facility was dictated by delivery schedule considerations resulting from the divider plate weld repairs.

- Flow Limiter for Primary Inlet Nozzles – The replacement steam generators were designed with a flow limiter located in the primary inlet nozzle (see figure below) in order to make the reactor coolant system flow similar to the flow rate of the original steam generator and not exceed the maximum allowable reactor coolant system flow rate. The licensee's evaluation for the engineering design package determined that although the original steam generators had a number of plugged tubes, the reactor coolant system flow rate of the original steam generators was near the design requirement. Because the replacement steam generators has 377 more tubes than the original steam generators, and contained tubes with u-bends versus "square bends", the pressure drop of the replacement steam generators with no plugged tubes would be much less than the original steam generators resulting in a higher flowrate.

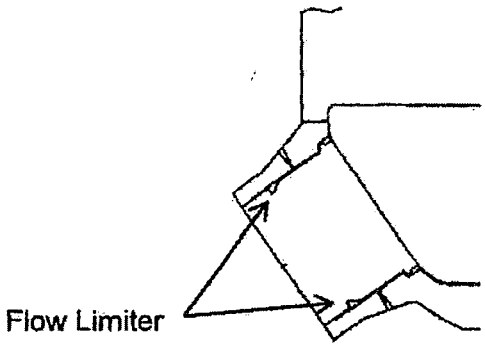


**Replacement Steam Generator Primary Inlet Nozzle (For Illustration Purposes Only)**

The flow limiter was designed to ensure the total "best estimate" reactor coolant flow rate with the replacement steam generators installed would not exceed 106.5 percent of the design volumetric flow rate of 396,000 gallons per minute at a reactor coolant system cold leg temperature of Tcold = 540.9°F. For Unit 2 replacement steam generators, the flow limiter diameter to nozzle inner diameter ratio was 0.94 while the ratio for Unit 3 steam generators was 0.915 due to Unit 3 reactor coolant pump replacement. The flow limiter dimensions resulted from a scaled model test performed by Mitsubishi and it was designed to be machined as part of the nozzle base metal.

- Pitch Distance of Tube Support Plate Drilled Holes in Unit 2 Steam Generator 2E0-89 – During fabrication of the tube support plates for Unit 2 steam generator 2E0-89, quality control inspections identified unacceptable measurements of the pitch distance between drilled holes. Mitsubishi fabrication procedures required verification of the total center-to-center distance between ten inline drilled holes at certain sample points of the tube support plate. The dimensional verification checks identified a total of 200 measurements in tube support plate number 3 and 10 measurements in tube support plate number 6 that did not meet the dimensional acceptance criteria established in the fabrication procedures. Mitsubishi evaluated this non-conformance condition and accepted the condition "as-is" with the SCE's approval. The technical justification for accepting the condition addressed four elements: (a) the impact of the condition on the ability to insert the tubes through the affected areas of the tube support plates, (b)

resulting stress on the tubes after insertion, (c) impact of the condition on the tube to anti-vibration gap size, and (d) possible occurrence of tube scratch during inspection. Similar unacceptable measurements were not identified in Unit 2 replacement steam generator 2E0-88 or Unit 3 replacement steam generators 3E0-89 and 3E0-88.

- Tube-to-Tube Clearance in Unit 2 steam generator 2E0-89 – During fabrication of Unit 2 replacement steam generator 2E0-89, interference checks identified that the clearance between the tubes in Rows No. 28 and 30 in Column No. 22 was less than the minimum clearance of 0.13-inch specified in Mitsubishi's inspection procedure. The condition was accepted "as-is" by Mitsubishi and SCE through the supplier deviation request process. The main considerations of the technical evaluation included: (a) thermal expansion difference, (b) tube expansion due to operating pressures, (c) tube displacement due to out-of-plane flow induced vibration, and (d) tube displacement due to seismic acceleration. The team noted that no tube-to-tube wear indications were identified in this area of the tube bundle.

- Anti-Vibration Bar Spacing Issues in Unit 2 Steam Generator 2E0-89 – During fabrication of Unit 2 replacement steam generator 2E0-89, quality control inspections identified unacceptable gaps between tubes and the anti-vibration bars in the outside tube columns. The affected area was identified as welding zone-4. The apparent cause for the anti-vibration bar spacing issue was due to performing the welding of zone-4 while the steam generator was oriented horizontally with this welding zone oriented to the bottom of the bundle. In this configuration, the tube bundle experienced sagging at the time of welding due to gravity. After completion of welding zone 4, the steam generator assembly was rotated 180 degrees for additional assembly steps, but the sagging in the opposite direction caused enlargement of the gaps in welding zone 4 and this enlargement remained approximately the same for all subsequent rotations. When zone-4 was rotated 180-degrees after welding, deflection or sagging of the tube retaining bars due to gravity slightly pulled the anti-vibration bars, increasing the gap between the tube and the anti-vibration bars in this zone.

  With the licensee's approval, Mitsubishi implemented various corrective actions to address the condition in the pending Unit 2 replacement steam generator 2E0-88 and subsequently in Unit 3 steam generators which included: (a) use of smaller spacer blocks between tubes for the installation of anti-vibration bars, (b) re-define the welding zones to limit welding in the horizontal position, and (c) reduce rotations during welding of the other bundle zones. Mitsubishi performed rework activities in Unit 2 steam generator 2E0-89 to restore anti-vibration bar spacing to design specifications. These activities resulted in better gap distribution. All the tube-to-anti-vibration bar gaps exceeding the initial dimensional criteria were further evaluated and accepted in accordance with Mitsubishi's gap size evaluation procedure.

- Rotations of Steam Generator Assembly for Anti-Vibration Bar Installation and Welding – The team noted that welding of anti-vibration bars structure required rotating the steam generators several times. As a result of the corrective actions

generated to address the anti-vibration bar spacing issues in Unit 2 steam generator 2E0-89, the installation procedure was revised to reduce the number of rotations for anti-vibration bar installation to attain better gap control. This procedure revision resulted in different number of rotations in each replacement steam generator. Steam generators Unit 2 E0-89, Unit 2 E0-88, Unit 3 E0-89, and Unit 3 E0-88 received 11.25, 4, 3.5, and 3.5 rotations, respectively, during installation of the anti-vibration bars structure.

- Temporary Installation of Plastic Ties – In order to limit the displacement of anti-vibration bars during rotation of the steam generator assembly for welding of the anti-vibration bars structure, Mitsubishi revised the installation procedure to install temporary plastic ties between the retaining bars and the tubes. This step of the anti-vibration bar assembly process was performed in a different sequence for Unit 2 and Unit 3 steam generators. For Unit 2, the installation of plastic ties occurred after welding the transition wrapper, the Helium leak test, and tube hydraulic expansion, but before welding the channel head to the tubesheet, the hydrostatic tests, and the pre-service inspection. In Unit 3, the installation of plastic ties was performed between welding the transition wrapper and the Helium leak test.

- Dimensional Controls of Anti-Vibration Bar Structure – According to Mitsubishi's preliminary cause evaluation taking place at the time of this inspection, the controls of critical dimensions affecting the clearances between the tube and the anti-vibration bars were gradually improved throughout the fabrication of the Unit 2 and Unit 3 steam generators. This improvement on dimensional controls was a consideration for the determination of the failure mechanism leading to tube-to-tube wear in Unit 3.

  The first dimensional control under consideration was the improvement of tube roundness in the section of the tubes that was bent to form the U-bend shape. During fabrication of Unit 2 steam generator 2E0-89, the supplier of tubular product for Mitsubishi (i.e. Sumitomo), experienced quality issues to meet the G-values established in the design specifications, resulting in a high number of tube rejections. The G-value was a measure of departure from roundness, or "ovality," after the tubes were bent and it was controlled in order to control the gap between tubes and anti-vibration bars (see figure below). The G-values were measured at different locations along the U-bend section of the tubes for a selected number of tubes per row, as established in Mitsubishi's procedure. The acceptance criteria for G-value varied depending on the row where the tubes were installed. The acceptance criteria also remained the same throughout the fabrication of Unit 2 and Unit 3 replacement steam generators.

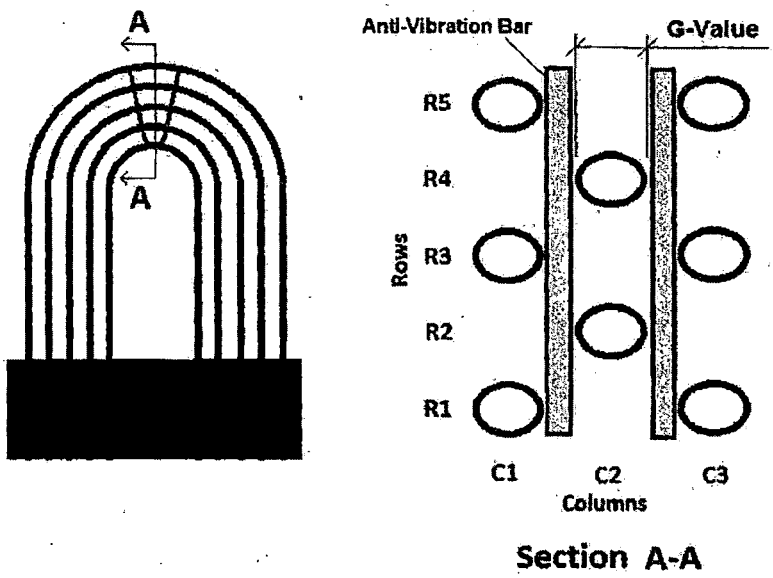


**Section A-A**

**Description of G-Value Parameter (Conceptual Drawing – For Illustration Purposes Only)**

Based on discussions with licensee personnel and documentation reviews, the team noted that Sumitomo implemented measures to improve the quality of the tube bending process which resulted in less deviation of G-values and a reduction in the amount and variability of tubing "ovality." Based on the statistical analysis of G-value data collected during fabrication of the Unit 2 and Unit 3 steam generators, Mitsubishi concluded that the G-values standard deviation gradually decreased since the fabrication of the first steam generator.

Another dimensional control under consideration was the variability of anti-vibration bar dimensions. Mitsubishi's fabrication procedures required inspection of various dimensions of the anti-vibration bars to control the gap between the anti-vibration bars and the tubes. These dimensions were: thickness in the straight sections, twisting and flatness of the straight sections after bending, and thickness of the anti-vibration bar tip (i.e. nose) after bending. Among these dimensions, the twisting and flatness of the straight sections after bending were verified using a "Go or No-Go" approach based on the acceptance criteria in Mitsubishi's procedures but no specific measurements were required to be maintained by procedure. Additionally, the acceptance criteria for anti-vibration bar dimensions remained the same throughout the fabrication of Unit 2 and Unit 3 replacement steam generators. Mitsubishi conducted a preliminary statistical analysis of the available dimensional data for anti-vibration bars and the team concurred that there were minor differences in the statistical distribution of these dimensions in Unit 2 and Unit 3 steam generators.

Engineering Change Package (10 CFR 50.59): The team determined that the licensee's evaluation for changes in the updated final safety analysis report's design methodologies for the replacement steam generators was consistent with SONGS procedures for the implementation of 10 CFR 50.59 requirements. The licensee's

evaluation contained in Engineering Change Packages 800071702 and 800071703 for the Unit 2 and Unit 3 replacement steam generators, respectively, determined that the replacement of the original steam generators did not affect the current licensing basis to the extent of needing prior approval from the NRC as required by 10 CFR 50.59.

In the 50.59 screening evaluation associated with the engineering change package for the Unit 2 and Unit 3 replacement steam generators, the licensee determined that the proposed activity did not adversely affect a design function, or the method of performing or controlling a design function described in the updated final safety analysis report. The licensee also determined that the steam generator replacement activity did not change a procedure in a manner that adversely affected how an updated final safety analysis report design function is performed or controlled. Additionally, the licensee determined that the steam generator replacement activity did not involve a test or experiment not described in the updated final safety analysis report. The licensee evaluated the following updated final safety analysis report design functions in the 50.59 screening:

- Steam Generator Design Functions
- Reactor Coolant System Structural Integrity
- Emergency Core Cooling System Performance
- Non-Loss of Coolant Accident Transients
- Containment Pressure-Temperature Analysis
- Low Temperature Overpressure Protection
- Reactor Protection System, Engineered Safety Features Actuation System, Core Operating Limit Supervisory System, and Core Protection Calculations
- Nuclear Steam Supply System Performance
- Non-Safety Related Control Systems Performance

However, the 50.59 screening evaluation identified three methods of analysis described in the updated final safety analysis report that were affected by the proposed steam generator replacement and required further evaluation against the criteria in 10 CFR 50.59. The affected methodologies are described below:

- Seismic Analysis of Reactor Vessel Internals – The original analysis of SONGS Unit 2 and Unit 3 reactor vessel internals with the original steam generators was performed with the methodology described in Combustion Engineering Topical Report CENPD-178, "Structural Analysis of Fuel Assemblies for Combined Seismic and Loss of Coolant Accident." Subsequent to the submittal of this report, Combustion Engineering revised the methodology by modifying modeling techniques, computer codes, testing methods, and acceptance criteria in response to changes in licensing requirements. Consequently, the original report was resubmitted to the NRC as CENPD-178-P, Revision 1-P, August 1981. This revision was approved by the NRC in a Letter from H. Bernard to A. Scherer, "Acceptance for Referring of Licensing Topical Report CENPD-178," dated August 6, 1982. The licensee used this revised methodology for the replacement steam generators and considered it as a methodology approved by the NRC for the intended application.

- Reactor Coolant System Structural Integrity – The structural analysis of the original steam generators used ANSYS software for the thermal and stress analyses while the replacement steam generators were analyzed using ABAQUS software. ANSYS was described in the updated final safety analysis report as a large-scale, general-purpose, finite element program for linear and nonlinear structural and thermal analysis of the reactor coolant loop components. The licensee considered ABAQUS to be similar to ANSYS. The licensee compared both programs using thermal and stress sample problems. The comparison demonstrated that the results varied from theoretical solutions by no more than 1 percent, and ABAQUS and ANSYS results themselves were also within 1 percent of each other. The variability of results was determined to be within the margin of error for the subject type of analysis.

- Tube Wall Thinning Analysis – The original steam generator analysis used CEFLASH computer program for the main steam line break mass-energy blowdown analysis, whereas the replacement steam generator analysis used manual calculations to represent the main steam line break blowdown loads by applying the maximum possible tube differential pressure, which bounded the pressure calculated by CEFLASH.

  For loss of coolant accident analysis, the original steam generator used STRUDL computer program to calculate displacement histories and then ANSYS computer program to calculate tube stresses. The tube stresses for the replacement steam generators were determined using ANSYS computer program based on the blowdown forces. For the original steam generators the combination of loads analyzed was primary loop pipe break plus design basis earthquake and main steam line break plus design basis earthquake. For the replacement steam generators, the loss of coolant accident, design basis earthquake, and the main steam line break events were combined as one limiting event, which SCE considered to be a more conservative method of evaluation relative to the original steam generators. The licensee determined that the results of the tube wall thinning analysis for the replacement steam generators were conservative or essentially the same and the methodology used did not represent a departure from a method of evaluation described in the updated final safety analysis report.

Further discussion is contained in Section 13.0 of this report on the methodology used by the licensee for the reactor coolant system structural integrity and tube wall thinning analysis.

The team noted that a key methodology for the design of the replacement steam generators was the thermal-hydraulic code used to model the flow conditions in the steam generators. Mitsubishi's FIT-III thermal-hydraulic code was accepted by SCE for the design of the replacement steam generators. The team noted that the updated final safety analysis report did not describe the thermal-hydraulic code used for the design of the original steam generators and therefore the use of the FIT-III thermal-hydraulic code did not constitute a change in methodology or a change in an element of a methodology described in the updated final safety analysis report. The updated final safety analysis report did describe the computer

code CRIB as the code used to analyze overall steam generator performance. As described in the updated final safety analysis report, CRIB was used to establish the recirculation ratio and fluid mass inventories as a function of power level in the original steam generators.

With regard to the major design changes between the original and replacement steam generators, the updated final safety analysis report did not specify how the original steam generators relied on special design features such as the stay cylinder, tubesheet, tube support plates, or the shape of the tubes to perform the intended safety functions. The description of the original steam generators was focused on the overall thermal performance characteristics and the applicable codes and standards used for fabrication. The updated final safety analysis report provided a brief description of the egg-crate tube support plate design and its function to prevent concentration of impurities in the tube-to-tube support plate gap, which could lead to tube degradation. The updated final safety analysis report also described degradation issues of the egg-crate tube support plate design as a result of flow-accelerated corrosion and the corrective actions taken to mitigate this degradation mechanism.

Regulatory Guide 1.187, "Guidance for Implementation of 10 CFR 50.59, Changes, Tests, and Experiments," November 2000, allows the use of NEI 96-07, "Guidelines for 10 CFR 50.59 Implementation," Revision 1 for methods that are acceptable for complying with 10 CFR 50.59. Per NEI 96-07, changes affecting structures, systems, or components that are not explicitly described in the updated final safety analysis report can have the potential to adversely affect structure, system, or component design functions that are described and thus may require a 10 CFR 50.59 evaluation. Consistent with this guidance, SCE's 50.59 screening evaluated the differences in subcomponents between the original steam generators and replacement steam generators as to whether the differences adversely affected the design function (reactor coolant pressure boundary) of the steam generators. The replacement steam generators were designed and fabricated in accordance with quality assurance requirements, and 10 CFR 50.59 does not require the licensee to presume deficiencies in the design or fabrication.

c. Conclusions

The team identified two unresolved items. The unresolved item associated with the changes in dimensional control needs to be resolved prior to restart of Unit 3.

The team determined that no significant differences existed in the design requirements of Unit 2 and Unit 3 replacement steam generators.

Based on the updated final safety analysis report description of the original steam generators, the team determined that the steam generators major design changes were reviewed in accordance with the 10 CFR 50.59 requirements.

~~The team identified two unresolved items:~~

- ~~Evaluation of Retainer Bar Vibration during the Original Design of the Replacement Steam Generators~~

- ~~Evaluation of changes in Dimensional Controls during the Fabrication of Unit 2 and Unit 3 Replacement Steam Generators~~

~~Additionally, an~~ An unresolved item related to a change in a method of evaluation used for the stress analysis calculations is discussed in Section 13 of the report.

5.0 Quality Assurance/Quality Control (Charter Item 5) (Mitsubishi Charter Item 4)

The team reviewed numerous documents from both SCE and Mitsubishi (including sub-contractors, such as Sumitomo) associated with the design, fabrication, and manufacturing of the steam generators for both units. The team reviewed SCE and Mitsubishi's quality assurance program, procedures and implementation activities for the control of purchased material, equipment, and services; inspections; procurement document control; and corrective action and nonconformance activities. Specifically, the team reviewed a sample of Mitsubishi nonconformance reports, audit, survey, all SONGS condition action requests, audits, surveillances, stop work orders, and supplier deviation requests associated with the design and manufacturing of the steam generators. The team concluded that these portions of SCE and Mitsubishi's quality assurance program regarding its safety-related activities were appropriately controlled and implemented.

5.1 SONGS Quality Assurance/Quality Control

a. Inspection Scope

The team reviewed SCE's implementation of their quality assurance program to determine if it complied with the requirements of 10 CFR 50, Appendix B, "Quality Assurance Criteria for Nuclear Power Plants and Fuel Reprocessing Plants." The team reviewed SONGS implementing procedures, quality assurance manual, vendor audits, procurement specifications, corrective action requests, and numerous other documents, as well as interviewed a number of quality assurance/control and engineering personnel to determine the appropriateness of activities affecting quality conducted during fabrication, manufacturing and delivery of the replacement steam generators.

b. Observations and Findings

No findings were identified.

(1) Policies and Procedures for Supplier Selection and Control

The team reviewed Quality Assurance Manual, Section 17.2.7, "Control of Purchased Material and Services," which defines the process used to ensure that purchased material, source material, and subcontracted services conform to applicable codes and standards. Section 17.2.7.2 of the quality assurance manual provided measures for the approval and control of suppliers and describes the methods that SCE uses to conduct technical and quality assurance evaluations of potential suppliers. Specifically, SCE evaluated an audit performed by Dominion (DA 2002-92, "Dominion Audit of Mitsubishi Heavy Industries"). The evaluation was performed and documented in accordance with SONGS policies and implementing procedures that govern the control of purchased material, equipment, and services. The results of SCE Evaluation MHI-01-04, "Evaluation and Review of Contractor, Consultant, Utility or Licensee Audit Report," stated that Mitsubishi was conditionally qualified for the fabrication and design of the replacement steam generators. An audit was performed by SCE when a sufficient quantity of work had been performed to demonstrate implementation of Mitsubishi's quality assurance program. Southern

California Edison-'s oversight of Mitsubishi also included verification of Mitsubishi's activities during fabrication, inspections, testing and shipment of the procured item. After approximately 14 months from the initial evaluation SCE removed the conditional qualification based on results from Evaluation MHI-10SV-05, "Source Evaluation Report of MHI," dated February 8, 2006, and MHI-3SV-06, "Source Verification Report of MHI," dated May 3 2006, and implementation and verification of specific corrective actions. Part of the SONGS oversight plan of Mitsubishi included the placement of SCE quality assurance/quality control personnel (residents) at the Mitsubishi facility. Plan SGR-A10183, "Replacement Steam Generator Resident Oversight Plan," described the roles and responsibilities of the resident management, engineering, and quality oversight implementation strategy for the replacement steam generators. This oversight plan was created to provide reasonable assurance that the design, licensing, fabrication, delivery, and acceptance of the SONGS replacement steam generators were performed in accordance with specified SCE, industry, regulatory, and Code requirements. The team noted that after the resident was placed at Mitsubishi, Source Verifications and Surveillances performed by SCE decreased. After the NRC team conducted several interviews with the SCE personnel responsible for oversight of Mitsubishi it was determined that the resident provided adequate oversight of Mitsubishi's activities. Nuclear Oversight Division Project Oversight Quarterly Reports were provided by SCE that demonstrated no decrease in SCE oversight of Mitsubishi. These responsibilities were shifted to the resident at Mitsubishi. During the review of the documentation generated by the resident the NRC team noted that the resident was performing these activities on behalf of SCE.

(2) Purchase Order Review

The team reviewed purchase order 6C294014 from Edison Material Supply LLC, issued September 28, 2004, for the design, fabrication, and delivery of four replacement steam generators for SONGS Units 2 and 3. The procurement order stated that all related work was to be performed in accordance with Specification SO23-617-01, "Specifications for Design and Fabrication of RSG for Units 2 and Unit 3." Specification SO23-617-01 identified the codes, standards, regulations and other documents applicable to the design, fabrication, and delivery of the replacement steam generators. For example Specification SO23-617-01 invoked American Society of Mechanical Engineers Boiler and Pressure Vessel Code, American National Standards, American Society for Testing and Materials Standards, and Electric Power Research Institute Technical Report 016743-V2R1, "Guidelines for PWR Steam Generator Tubing Specifications and Repair," among others.

(3) Supplier Audit and Surveillance Reports

The team reviewed a sample of audits and surveillances performed on Mitsubishi to verify SCE's approval process of Mitsubishi and subcontracted services. The team noted that the audits and annual assessments reviewed were adequately documented and provided evidence of Mitsubishi's compliance with quality assurance requirements. The team also verified that audit reports supported the conclusions made by SCE.

5.2 Mitsubishi Quality Assurance/Quality Control

a. Inspection Scope

The team reviewed Mitsubishi implementation of their quality assurance program to determine if it complied with the requirements of 10 CFR 50, Appendix B, "Quality Assurance Criteria for Nuclear Power Plants and Fuel Reprocessing Plants." The team also reviewed a sample of reports from audits and surveys that Mitsubishi conducted of various subcontractors, such as Sumitomo to determine the adequacy of oversight provided by Mitsubishi activities affecting quality and that contracted activities were implemented in accordance with the Mitsubishi-approved quality assurance program. In addition, the team reviewed Mitsubishi's Approved Suppliers List to verify that vendors listed were qualified according to Mitsubishi's specifications and that the list was maintained current.

b. Observations and Findings

No findings were identified.

(1) Policies and Procedures for Supplier Selection and Control

The team reviewed Mitsubishi Quality Assurance Manual, Section 4, "Procurement Control," of the which defines the process used to ensure that purchased material, source material, and subcontracted services conform to the applicable requirements of the American Society of Mechanical Engineers Code and to customer procurement documents. Section 4.4 of the Quality Assurance Manual provided measures for the approval and control of suppliers and described the process that Mitsubishi used to conduct surveys or audits, as required. Additionally, Section 4.4 provided guidance for the preparation of purchase specifications and subcontract specifications, including the imposition of regulatory requirements for the American Society of Mechanical Engineers Code, Section III products.

The team reviewed Procedure BUH94-06, "Vendor Evaluation Procedure," which provided guidance on the evaluation of the quality control capability of suppliers by performing surveys, audits and performance evaluations of the supplier quality assurance program. Procedure BUH94-06 provided a detailed description of the entire process to be followed by auditors before, during and after a survey/audit was performed.

No issues were identified.

(2) Supplier Audit and Surveillance Reports

The team reviewed a sample of external audits and surveys to verify Mitsubishi's approval process of Sumitomo Metal Industries, Limited, Steel Tube Works and Sumitomo Metal Industries, Limited, Pipe & Tube Company Wakayama Steel Works. The team noted that the audits and annual assessments reviewed were adequately documented and provided evidence of each company's compliance with quality

assurance program requirements. The team also verified that audit checklists were prepared and completed for the audit and contained sufficient objective evidence to support the conclusions made by Mitsubishi.

During the review, the team learned that as a consequence of nonconformance report UHNR-SON-RSG-06N005 related to inadequate lot control during final mill annealing of the tubing, Mitsubishi issued a stop work order to Sumitomo. As part of their process Mitsubishi visited Sumitomo to find the root cause of the nonconformance. After a review of Sumitomo's corrective action, Mitsubishi was able to confirm the adequacy of the corrective actions and preventive actions. Mitsubishi released Stop Work Order UHH-G06A097 imposed on Sumitomo.

On May 8, 2007, Mitsubishi performed Special Audit UHQ-07N004, on Sumitomo, in order to confirm adequacy of activities based on Sumitomo Corrective Action Plan UHCP-07N004. During the audit Mitsubishi found two findings and made one recommendation. Both findings required corrective action from Sumitomo. The Mitsubishi audit indicated that Sumitomo was not able to perform adequate activities for manufacturing heat transfer tubing in accordance with Sumitomo's shop manual. The causes of the deficiencies identified during the audit were a result of Sumitomo's staff failing to follow the shop manual requirements. Because the two findings were related to the stop work order, Mitsubishi did not allow Sumitomo to start manufacturing activities until adequate implementation of corrective actions were confirmed by Mitsubishi. On June 21, 2007, Mitsubishi verified Sumitomo implementation of the corrective actions. During this visit at Sumitomo, Mitsubishi verified the operations involving straight tube fabrication prior to tube bending operations were performed in accordance with Sumitomo's shop manual. Mitsubishi found that the same type of corrective actions taken by Sumitomo for straight tube fabrication operations applied to tube bending operations. During the review of the implementation of the corrective actions Mitsubishi could not verify acceptability of Sumitomo tube fabrication operations for the tube bending process. Mitsubishi allowed Sumitomo to restart operation only for the straight tube fabrication. On July-13, 2007, Mitsubishi subsequently confirmed the adequacy of Sumitomo corrective actions on tube bending processes. Mitsubishi verified that the bending operations followed the requirement of the Sumitomo' shop manual. On July 17, 2007, Mitsubishi lifted the restrictions imposed on Sumitomo and they were allowed to restart operations.

No issues were identified.

(3) Maintenance of the Approved Supplier List

The team reviewed Mitsubishi Quality Assurance Manual Section 4, "Procurement Control," which defined the controls for the maintenance, distribution, and update of Qualified Vendor List UES-20100006. According to Section 4, the Nuclear Plant Quality Assurance Section had the responsibility for preparing, approving, and distributing the qualified vendor list and any subsequent revisions. In addition, a review by the quality assurance engineer was required prior to final document approval. Mitsubishi was informed of changes to their supplier's quality assurance manuals through procurement requirements imposed on the suppliers on their

certificate of qualification as an approved vendor. If the vendor did not maintain their quality assurance program, they were removed from the qualified vendor list. Prior to issuing a Quality Assurance Manual revision, approved vendors were required to send a copy to Mitsubishi for review and approval, after which Mitsubishi updated the qualified vendor list with the latest revision number and date.

No issues were identified.

5.3 Quality Assurance Conclusion

The team concluded that the quality assurance program requirements for quality activities to support the replacement steam generator project were consistent with the requirements of 10 CFR Part 50, Appendix B. The team also concluded that SCE's and Mitsubishi's quality assurance program requirements were appropriately translated into implementing procedures to support the replacement steam generator project.

6.0 Implementation of Steam Generator Industry Information (Charter Item 6) (Mitsubishi Charter Item 3)

a. Inspection Scope

The team reviewed procurement documentation, Mitsubishi design documentation, and the 10 CFR 50.59 review package to assess SCE's and Mitsubishi's consideration and implementation (as appropriate) of operating experience as part of the steam generator replacement project, and in the steam generator tube inspections conducted during the current outages for SONGS Units 2 and 3. The team interviewed various personnel with respect to operating experience considerations relating to major design changes incorporated into the replacement steam generators. The team reviewed operating experience in NRC generic communications and worldwide plant operating experience that might potentially be relevant to conditions observed at SONGS.

b. Observations and Findings

No findings were identified.

The original steam generators installed throughout the domestic fleet of pressurized water reactors, including SONGS, experienced widespread corrosion of the tubes and tube support plates, stress corrosion cracking of the tubes, and wear at tube supports. These problems led to the replacement of nearly all of the original steam generators, in most cases well before the end of their design lifetime. For SONGS, the design of the replacement steam generators included a number of design changes to correct life limiting problems with the original steam generators, based in part on consideration of SONGS-specific and industry-wide operating experience. This included use of more corrosion resistant materials for the tubing and tube support plates to mitigate corrosion and stress corrosion cracking issues experienced in the past. The licensee's bid specification required that the stay cylinder feature of the original steam generators be eliminated to maximize the number of tubes that could be installed in the replacement steam generators and to mitigate past problems with tube wear at tube supports caused by relatively cool water and high flow velocities in the central part of the tube bundle.

Mitsubishi employed a broached trefoil tube support plates instead of the egg crate supports in the original design. In addition to providing for better control of tube to support plate gaps and easier assembly, the broached tube support plates were intended to address past problems with the egg crate supports by providing less line of contact and faster flow between the tubes and support plates, reducing the potential for deposit buildup and corrosion. Mitsubishi selected a u-bend configuration for the upper part of the tube bundle instead of the square bend design of the original steam generators based on its experience that u-bends were easier to fabricate and support and were easier to inspect.

The team's review of Mitsubishi design documentation for the anti-vibration bars indicates that Mitsubishi considered wear in the u-bend region as the most important issue affecting the anti-vibration bar design. Mitsubishi reviewed operating experience regarding wear in the u-bend region of replacement steam generators and trended the experience data as a function of steam generator manufacturer, tube packing arrangements (tube pitch, square versus triangular arrays), and steam generator size. The SONGS steam generators are relatively large, and Mitsubishi acknowledged that this and the tight tube packing geometry could affect wear experience. Mitsubishi stated that the SONGS replacement steam generator were designed to minimize these concerns by providing more support points with shorter spans in the u-bend region along with effective zero gaps between the tubes and anti-vibration bars during steam generator operation. Mitsubishi manufacturing was designed on achieving very small uniform gaps between the tubes and anti-vibration bars during assembly.

Engineering Change Package NECP 800071703 for the replacement steam generators evaluated industry operating experience as it related to the manufacture and operation of the replacement steam generators. Several of these experiences related to fabrication issues, lack of weld quality, material defects, loose parts, lack of cleanliness, and failure to fully expand tubes in the tubesheet. The licensee found most of these issues to be applicable to the replacement steam generators at SONGS, but that these kinds of issues would be adequately addressed by the supplier's (typically Mitsubishi) augmented quality assurance procedures and continuous quality oversight by the licensee. The licensee also cited augmented receipt inspections, in-process verifications, foreign material exclusion and control, and cleanliness inspections on the part of the supplier or the licensee, as applicable, as addressing these issues.

The licensee addressed industry operating experiences relating to stress corrosion cracking of steam generator tubing by noting that the Alloy 690 thermally treated tubing in the replacement steam generators were expected to be substantially more resistant to stress corrosion cracking than the tubing alloys used in earlier model steam generators. The licensee also addressed experience at another unit which experienced tie rod and consequential tube bow as a result of differential thermal expansion between the tubes and shroud and unexpected interference between some tube support plates. The stay rod (equivalent to tie rods at other unit) and shroud material for the replacement steam generators have been selected to have similar coefficients of thermal expansion which would preclude a similar problem.

Steam Generator Degradation Assessment 51-9176667-001 (prepared by AREVA) supporting steam generator inspections during the current outages for Units 2 and 3

evaluated industry operating experience relating to steam generator in-service inspections. This included operating experience reports, including NRC Information Notice 2010-05, "Management Of Steam Generator Loose Parts And Automated Eddy Current Data Analysis," relating to eddy current test probe issues and data analysis errors. In response to these issues, SCE personnel stated that specific training was given to the data analysts at SONGS on the lessons learned from these experiences and where applicable, appropriate data was included in the SONGS site specific performance demonstration. The licensee also described additional measures that would be taken at SONGS to address these issues. The review also addressed operating experience reports dealing with unexpected tube support indications or lack thereof. In response, SCE stated that indicated anti-vibration bar locations by eddy current will be compared to the anti-vibration bar locations specified in the Mitsubishi design drawings.

Steam Generator Degradation Assessment 51-9176667-001 also addressed numerous operating experience reports involving loose parts and foreign objects in steam generators, including several instances involving resultant damage to steam generator tubing. These reports included NRC Information Notices 2004-10, "Loose Parts in Steam Generators," 2004-16, "Tube Leakage Due to a Fabrication Flaw in a Replacement Steam Generator," and 2004-17, "Loose Part Detection and Computerized Eddy Current Analysis in Steam Generators." Some of these reports dealt with eddy current probes, or pieces of probes, which were left behind as loose parts on the primary side. Most of the operating experience reports related to lose parts and foreign objects on the steam generator secondary side. In response, SCE approach for addressing this issue was through procedure changes and secondary side visual inspections which included the open tube lane, the entire peripheral annulus, and appropriate visual examination followup on eddy current indications of possible loose parts. The inspection with the exception of the loose parts component was performed, as scheduled, during the current refueling outage for SONGS Unit 2. The inspection for loose parts will be performed at the first scheduled inspection during the next refueling outage. The team noted that possible loose parts indications were not found during the 100 percent eddy current test inspection of the Unit 3 steam generators during the current outage. The team also noted that secondary side visual inspections were performed in the upper bundle area of the Unit 3 steam generators to evaluate the tube-to-retainer bar intersections and in a limited area above the 7th tube support plate.

The NRC staff issued many generic communications relating to steam generator tube integrity issues since the 1980s. The team reviewed these documents and determined that many of these related to the potential for stress corrosion cracking of the tubes which the staff found was not expected to be a concern for the thermally treated Alloy 690 material in the SONGS replacement steam generators by virtue of its greatly enhanced resistance to stress corrosion cracking. Most of the others related to problems encountered with eddy current flaw detection and sizing, the occurrence and detection of loose parts/foreign objects, and monitoring of primary to secondary leakage.

The team reviewed NRC generic communications not falling into one of the above categories for potential relevance to SONGS Unit 2 and 3. One of these was NRC Information Notice 2004-16 concerning an operational leakage event at another plant due to damage caused by a packing screw during transport to the steam generator

manufacturer. The licensee stated in its steam generator change package that this incident was precluded for SCE by prohibiting the use of screws and nails as fasteners for tubing shipping crates. The licensee also addressed NRC Information Notice 2007 37, "Buildup of Deposits in Steam Generator," concerning fatigue of a low row u-bend at a foreign unit as a result of deposit build up and lack of support for the low row u-bend. Engineering Change Package NECP 800071703 specified that this type of incident was precluded in the replacement steam generators by virtue of anti-vibration bar supports extending to the low row u-bends. Steam Generator Degradation Assessment 51-9176667-001 documented that this type of problem reflected an advanced stage of deposit accumulation that was not anticipated for the foreseeable future in the SONGS replacement steam generators.

c. Conclusions

The team's review indicated that lessons learned from these NRC generic communication documents had generally been incorporated into industry guideline documents relating to steam generator inspections, monitoring of primary-to-secondary leakage, and other guidelines documents prepared by the Electrical Power Research Institute. This information was incorporated into SCE's design specifications, inspection and, leakage monitoring guidelines.

7.0 Packing, Shipping, Handling, and Receipt Inspection (Charter Item 7)

a. Inspection Scope

The team interviewed licensee personnel involved with the packing, shipping, handling, and receipt inspection of the replacement steam generators. In addition, the team reviewed SCE receipt acceptance criteria to assess if critical attributes were appropriately specified and if the licensee had the ability to assess acceptability of meeting those acceptance criteria. The team reviewed evaluations associated with supplier deviation reports, nuclear notifications and changes to handling specifications. With respect to replacement steam generators the team focused on differences in SONGS shipping, handling, and receipt acceptance between the Unit 2 and 3 steam generators from the manufacturing site in Japan to final installation on site.

b. Observations and Findings

No findings were identified.

The team identified three unresolved items for which additional information is required to determine if performance deficiencies exist or if the issues constitute violations of NRC requirements.

(1) Introduction: The team identified an unresolved item associated with Unit 3 steam generators not shipped in accordance with specification SO23-617-01, "Design and Fabrication of Replacement Steam Generators for Unit 2 and Unit 3," Revision 4, and requirements for handling, storage, and shipping. Specifically, ANSI N45.2-1977, "Quality Assurance Program Requirements for Nuclear Facilities," required a special protective environment for handling, storage, and shipping of the replacement steam

generators. However, because of schedule changes, the Unit 3 protective environment which included maintaining a nitrogen pressure and a monitoring plan was altered significantly.

Description: The team evaluated specifications associated with the shipping and handling of the Unit 2 and 3 replacement steam generators. Based on the information evaluated by the team, the steam generators procurement and shipping specifications required monitoring and maintenance of nitrogen atmosphere inside the replacement steam generators during shipment. Supplier Deviation Request SDR 10041870-09091 dated December 1, 2009, documents a request "not to control the positive pressure, the dew point of nitrogen, and the oxygen content on the primary and secondary side of the Unit 3 replacement steam generators to accelerate delivery schedule."

Specification SO23-617-01, Section 3.16.3, specifies the supplier shall be responsible for monitoring and maintaining nitrogen atmosphere inside the steam generators during their shipping from Mitsubishi to the California port discharge point. The team noted that Unit 3 steam generators did not require, monitoring or control of dew point, oxygen concentration, inside nitrogen pressure. The team could not identify if this was properly evaluated (Reference Section 5 of shipping and handling procedure SO23-617-1-M1350).

Additional review and follow up will be required to review the evaluations and corrective actions associated with the maintaining the Unit 3 replacement steam generators protective environment during shipping and then determine whether this issue represents a performance deficiency or constitutes a violation of NRC requirements. This issue is identified as URI 05000362/2012007-05, "Shipping Requirements not in Accordance to Industry Standards."

(2) Introduction: The team identified an unresolved item associated with the shipping and handling specifications requiring methods of tube bundle support. The team could not determine if this requirement to provide a tube bundle support method was adequately evaluated by SCE.

Description: Based on the information gathered by the team on shipping and handling specifications associated with the Unit 2 and 3 replacement steam generators, the team could not determine that Mitsubishi or SCE adequately considered the potential impact of not providing methods of tube bundle supports as required in Specification SO23-617-01. In response to the team questions regarding tube bundle support methods, the team was provided with results from Procedure L5-04GA069, "Sagging Measurement Procedure," Revision 7. However the team noted the procedure is considered a non-quality affecting procedure and used for reference only.

Additional review and follow up will be required to review the evaluations associated with the requirements to provide tube bundle support during shipping for the Unit 2 and 3 steam generators and then determine whether this issue represents a performance deficiency or constitutes a violation of NRC requirements. This issue is

identified as URI 05000362/2012007-06, "Shipping Requirements not in Accordance to Design and Fabrication Specifications."

(3) Introduction: The team identified an unresolved item associated with evaluation of excessive shipping induced forces of Unit 3 replacement steam generator 3E-088.

Description: The team reviewed the SG shipping accelerometer data reports for both Unit 2 and Unit 3. In addition, the team also reviewed shipping and handling records and identified the following:

- Different transoceanic shipping companies and ships were used (U2: Happy Ranger, U3: Enchanter)
- During the discharge from the ship Unit 3 replacement steam generator 3E0-88 (3B) recorded simultaneous signals on the three attached accelerometers
- Unit 3 steam generator 3E0-88 was the only steam generator to record simultaneous signals on the three attached accelerometers
- Unit 3 steam generators received significantly more accelerometers hits compared to Unit 2

Unit 3 replacement steam generator 3E0-88 accelerometers indicated up to a 1.23 g spike with a simultaneous recording on all three of the attached accelerometers. Mitsubishi provided an evaluation of the forces which showed loads were within allowable stress limits but exceeded stress for an operating basis earthquake. The team was not able to determine if this was properly considered.

Additional review by the NRC is required to fully assess if the shipping forces contributed to the tube-to-tube wear in Unit 3 and then determine whether this issue represents a performance deficiency or constitutes a violation of NRC requirements. This issue is identified as URI 05000362/2012007-07, "Unit 3 Steam Generator 3E0-88 Stresses Related to Handling."

c. Conclusions

The team identified three unresolved items related to the shipment of Unit 3 steam generators; however, the team did not identify any connection between these shipping changes and the unexpected tube-to-tube wear.

~~The unresolved items are :~~

- ~~Shipping Requirements not in accordance with Industry Standards~~
- ~~Shipping Requirements not in accordance with Design and Fabrication Specifications~~
- ~~Unit 3 Steam Generator 3E0-88 Stresses Related to handling~~

8.0 Thermal-hydraulic and Flow Induced Vibration Modeling (Charter Item 8)

a. Inspection Scope

The team conducted and overall review of Mitsubishi thermal-hydraulic design documents and drawings used in the manufacture of the Units 2 and 3 steam generators. The team developed an independent ATHOS model to run simulations for various operating conditions to assess thermal-hydraulic phenomena in the steam generators and assess differences in key parameters based on changing operating conditions. The objective of the modeling was to understand the interactions of the key parameters to compare ATHOS modeling results to the degradation trends found during the eddy current inspections.

~~The team reviewed portions of the vibration modeling. Two~~The team was not able to perform any independent tube vibration analysis because the NRC does not have the associated vibration software programs. However, since two key outputs of the thermal-hydraulic code are inputs to the vibration model, the ATHOS model results for fluid velocity and void fraction were used to predict increases or decreases in vibration forces and amplitude.

b. Observations and Findings

No findings were identified.

The team identified one unresolved item for which additional information is required to determine if a performance deficiency exists or if the issue constitutes a violation of NRC requirements.

(1) Introduction: The team identified an unresolved item associated with the adequacy of Mitsubishi's FIT-III thermal-hydraulic code. The FIT-III code predicted non-conservative low velocity and low void fraction results which were used as inputs to the vibration code FIVATS. These non-conservative thermal-hydraulic results lead Mitsubishi to conclude that margins to instability were significantly larger than they actually were.

Description: Replacement steam generators were designed and manufactured in accordance with SONGS Design Specification SO23-617-1and ASME Section III, "Rules for Construction of Nuclear Facility Components". The replacement steam generators had enhanced materials and maintenance.

The tube bundle, comprised of 9727 u-tubes, is supported by a set of seven tube support plates which are maintained and spaced by a network of tie-rods. The ends of the u-tubes were welded onto the tube sheet lower face cladding and were full depth expanded in the tube sheet holes. The u-bends are supported by a set of 6 anti-vibration bars, having a maximum of 12 contact points, in the center of the bundle. For shorter tubes near the periphery, a fewer number of anti-vibration bars are present.

One of the major enhancements of the replacement steam generators was the use of Alloy-690 tubing versus Alloy-600 for corrosion resistance. Alloy-690 has lower heat conductivity so, to achieve ~~the~~ same power, the heat transfer surface area must be increased by at least 10 percent. This required more tubes to be used in the replacement steam generators. The increased number of tubes resulted in a more

tightly compacted tube bundle and elimination of the stay cylinder. The increase in the number of tubes could lead to increases in primary reactor coolant flow through the steam generators. Orifices were ~~machined as part of~~installed in the steam generator inlet nozzles to ensure maximum allowed primary system flowrates were not exceeded.

The tube layout indexing or incrementation used in these generators was smaller than other replacement steam generator designs. The tighter indexing results in smaller pitch/diameter ratio in critical regions of the tube bundle u-bends. In addition, it was noted that the anti-vibration bar support structure is not connected to the wrapper for lateral or vertical support; instead the anti-vibration bar system structure is only supported vertically by resting on the tubes.

Other operational and physical comparisons of the replacement steam generators and original steam generators were reviewed by the team and no significant differences were noted.

Additional review by the NRC is required to fully assess the adequacy of Mitsubishi's FIT-III thermal-hydraulic code and then determine whether this issue represents a performance deficiency or constitutes a violation of NRC requirements. This issue is identified as URI 05000362/2012007-08, "Non-Conservative Thermal-Hydraulic Model Results."

(2) Thermal-Hydraulic and Vibration Assessments

The replacement steam generators thermal hydraulic operation and responses were based on the steam generator design geometric characteristics and operating parameters of the reactor coolant flow and temperature and the secondary feedwater flow and temperature. Calculations were performed for 0 to 100 percent power, beginning-of-life and end-of-life conditions considering limiting tube plugging and fouling. The important actual operating parameters selected for use in the model were saturation pressure, circulation ratio, steam flowrate, tube and shell side pressure drops, water and steam inventories, and global heat transfer coefficient.

Mitsubishi used the SSPC (Steady State Performance Calculation) code to compute these operational parameters, as described in Mitsubishi Document L5-04GA510, "Thermal and Hydraulic Parametric Calculations," Revision 5. The FIT-III code was used to determine thermal-hydraulic fluid flow conditions, with the results described in Mitsubishi Document L5-04GA521, "3D Thermal and Hydraulic Analysis," Revision 3. The FIVATS code was used to compute tube stability ratios that are used to predict tube vibration, with results described in Mitsubishi Document L5-04GA504 "Evaluation of Tube Vibration," Revision 3. In addition, the ABAQUS code was used compute stress and natural vibration frequency, and a code called IVHET was used for tube wear analysis. The key design code for tube bundle design and vibration analysis is thermal-hydraulic code FIT-III since it computes the two key parameters (fluid velocity and density[1]) that are the primary

[1] Void fractions and density are inversely proportional.

contributors to the onset of fluid-elastic instability, which indicates the potential for excessive tube vibration.

The Mitsubishi acceptance criterion for vibration was to avoid fluid-elastic instability of tube spans by keeping the calculated stability ratios less than 1. Mitsubishi used the approach given in the ASME code Section III, Division 1, Appendix N-1330, "Flow-Induced Vibration of Tubes and Tube Banks," to calculate stability ratios and they also avoided natural frequencies of the tubes similar to the reactor coolant pump dynamic frequencies.

Design specific flow induced vibration analysis was performed for select U-bend tubes exposed to the greatest vibration risk, generally those with longest unsupported length under most limiting operating condition (lowest steam pressure, end of life design conditions). The phenomenon of fluid-elastic instability of tubes is characterized by cross-flow velocity (for out-of-plane mode) and normal velocity (for in-plane mode) where the local velocities exceed a critical velocity value (given via Conners' Equation[2]). The parameter of local velocity divided by critical velocity is referred to as stability ratio. The accuracy of calculating fluid-elastic instability is limited based on inputs that are best determined by design-specific mockup test data. Mitsubishi did not perform design-specific mockup tests, but used generally accepted test data, and other data based on Mitsubishi test rigs that were not specific to the SONGS replacement steam generator design.

If operating velocities reach this critical value, vibration amplitudes can increase rapidly and fluid-elastic instability forces can lead to rapid pulsation and damaging of tubes. The U-bend region is most susceptible because (1) the local fluid has a higher void fraction, with high velocities; (2) the fluid flow is in a direction normal to the tube, and (3) the anti-vibration bars are limited in their dampening capability along the plane of the tubes. Traditional design of anti-vibration bar systems have not considered in-plane fluid forces since it was accepted that the rigidity and dampening strength of the tube in this direction was adequate to preclude it. This event at SONGS is the first US operating fleet experience of in-plane fluid-elastic instability, sufficient to cause tube-to-tube contact and wear in the U-bend region.

The team noted that Design Specification SO23-617-1 did not address specific criteria for stability ratio and does not mention fluid-elastic instability. The team did find that the Mitsubishi calculated design values for stability ratios did not exceed 0.5. It is important to note, that each steam generator manufacturer has different design values for maximum stability ratios; therefore there is no standard value. The smaller that the design stability ratio is (has to be less than 1), the more margin to fluid-elastic instability.

Mitsubishi computed the flow-induced vibration status of the steam generators in Document L5-04GA504, "Evaluation of Tube Vibration," Revision 3. The critical flow velocity, Uc, was obtained using the Connors' Equation based on output fluid velocities and densities from their FIT-III thermal-hydraulic model. The critical flow

---

[2] Fluidelastic Vibration of Heat Exchanger Tube Arrays, Journal of Mechanical design – Volume 100 – April 1978, H.J. Connors, JR.

velocity is then calculated based on damping ratio, tube mass, tube outside diameter, averaged local cross flow gap velocity, and fluid density per selected tube. The method is based on formulations given in the ASME code Section III, Division 1, Appendix N-1330, "Fluid Elastic Instability". The ratio of normal-to-tube cross flow gap velocity to this critical velocity defines the "stability ratio".

Steam generator vendors must develop specific methods based on the thermal-hydraulic code selected and experimental data used to determine coefficients in the Conners' Equation for their particular steam generator design. The experimental data used ~~in determining~~justify the ~~coefficients~~methods can be developed from in-house tests or taken from published industry data. Mitsubishi indicated that in their methodology two conservatisms were used in their bundle vibration analysis: (1) FIT-III gap velocities were averaged and multiplied by 1.5 and (2) one of 12 anti-vibration bars contacts were assumed to be inactive. The team noted that in Mitsubishi Document L5-04GA504, "Evaluation of Tube Vibration," Revision 3, the 1.5 multiplier was not an added conservatism but a requirement, needed to match test data results.

The team developed an independent model of the new steam generators using the ATHOS thermal hydraulic code[3]. The calculations were intended to assess operating cycle differences between Units 2 and 3 steam generators and review thermal hydraulic phenomena within the steam generators in order to investigate key parameters and causal factors for the excessive tube wear rates. The NRC ATHOS calculations determined that the differences in primary inlet temperature and steam flow between the units were negligible. NRC ATHOS results indicated high void fractions and high u-bend gap velocities existed in the bundle as compared to Mitsubishi FIT-III analyses used for design.

Mitsubishi provided a comparison of their ATHOS model to their FIT-III model results. The Mitsubishi ATHOS model fluid velocities were approximately 3 times higher than the FIT-III model velocities with the 1.5 multiplier applied. Other independent code calculations, including an analysis by Westinghouse using their in-house modified version of ATHOS and an analysis by AREVA using their French code CAFCA4 showed similar thermal-hydraulic results (up to 4 times higher velocities than FIT-III) as those computed in the Mitsubishi ATHOS results and the NRC independent ATHOS calculations. Based on these comparisons, it was concluded that the FIT-III code and model results used for design were non-conservative even with the multiplier applied.

Most of the experimental work in fluid-elastic instability has been carried out for two-phase flow, with an air-water medium. Accepted industry data, as presented by the Mitsubishi, shows that in staggered array bundles (triangular pitch, pitch/diameter =1.33), the onset of tube instability for modern steam generators, such as SONGS steam generators, can start at tube gap velocities above 6 meter/sec (pending

---

[3] ATHOS/SGAP Version 3.1: Analysis of the Thermal-Hydraulics of a Steam Generator, 2008

[4] R. Voilette, M. J. Pettigrew, N. W. Mureithi, "Fluidelastic Instability of an Array of Tubes Preferentially Flexible in the Flow Direction Subjected to Two-Phase Cross Flow," Trans. ASME, Journal of Pressure Vessel Technology, 128, 148 (2006).

effectiveness of the dampening structure)[4]. The NRC ATHOS model results indicated that there was a substantial localized region in the lower hot side of the u-bends where velocities exceeded 6 m/sec.

The NRC ATHOS calculations were compared to gap velocities computed both with the Mitsubishi ATHOS and the FIT-III models. Since tube R142C88 was the only one common for each of the analyses, it can be used as basis for comparison. The effective peak velocities were as follows:

- NRC ATHOS – 5.2 m/sec
- Mitsubishi ATHOS – 5.6 m/sec
- Mitsubishi FIT-III – 2.5 m/sec

Both the NRC and Mitsubishi ATHOS results were reasonably consistent and strongly suggested that high velocities coupled with high void fraction were primary causal factors in the tube fluid-elastic instability and the excessive wear patterns observed in the Unit 3 steam generators.

The team reviewed the verification and validation of both the Mitsubishi FIT-III thermal-hydraulic and FIVATS tube vibration models as stated in Specification SO23-617-1, Revision 4. The specification required Mitsubishi to design and build the steam generators in accordance with ASME NQA-1, "Quality Assurance Requirements for Nuclear Facility Applications," 1994, Subpart 2.7 "Computer Software" and Mitsubishi's quality assurance program.

The team reviewed Mitsubishi's verification and validation Report KAS-20050201, "FIT-III Code Validation Report," Revision 2. The report concluded the FIT-III code was valid for prediction of velocity and density behavior of two-phase flow under nominal conditions for the secondary side of PWR steam generators.

The team reviewed Mitsubishi's verification and validation Report KAS-20040253, "FIVATS Code Validation and Qualification Report," Revision 3. The FIVATS model was designed to calculate the stability ratios by using the flow velocity and density distributions from the FIT-III model. The FIVATS model primarily used the Conners' Equation, and validation was performed mainly by comparison to hand calculation; however, Mitsubishi used a mock-up test facility with a simple anti-vibration bar structure as part of their validation effort. The report concluded that adequate validation and qualification was performed to show compliance to software requirements and that the code could predict flow-induced vibration.

The team requested additional information as part of the verification and validation of the FIT-III thermal-hydraulic model. Mitsubishi provided several additional reports. One of the reports showed benchmarking comparisons to a French test facility program called CLOTAIRE in 1986. Another report conducted in 2002, showed comparisons between FIT-III and ATHOS, and concluded that both codes had good correlation with the CLOTAIRE experimental data. Because of the limited information provided, the team could not determine the validity of the benchmarking of FIT-III.

Overall, the team determined that the validation and verification of the FIT-III code did not present overwhelming evidence that this code has been adequately benchmarked. The team did not find any problems with the validation of the FIVATS code.

(3) NRC ATHOS Results

Figures 1 through 4 (different view angles of same results) show results, with low $T_{hot}$ and low steam pressure and present a 3D isometric encapsulation of steam qualities (red scale) at and above 0.9 (i.e., void fraction > 0.99) and field velocities at and above 6.0 m/sec (white scale).

The ATHOS model results of high steam quality and steam velocity closely align with the area of concern (tube-to-tube wear) in the Unit 3 replacement steam generators. In Figure 5, the code predicted regions of high void fraction and high steam velocities (vertically located z-axis cut at about 20 inches above the 7$^{th}$ TSP) are superimposed with tube-to-tube wear indications from Unit 3 steam generator 3E0-88.

The tube-to-tube wear indications align with anti-vibration bar wear indication trends; however, the anti-vibration bar wear patterns appear to indicate a more square-like, essentially rectangular behavior that suggests that there may also be a mechanical, fabrication, assembly, and/or material contribution to the tube-to-tube wear degradation.

**Figure 1**

Case 1

Qual =>0.90
W=>6.5 m/s

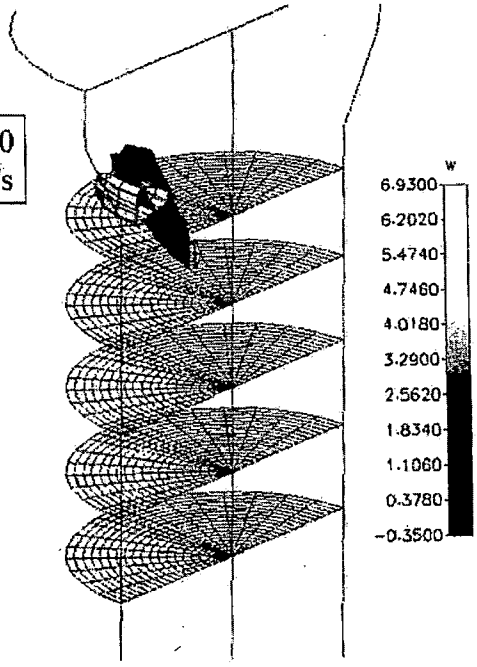

**Figure 2**

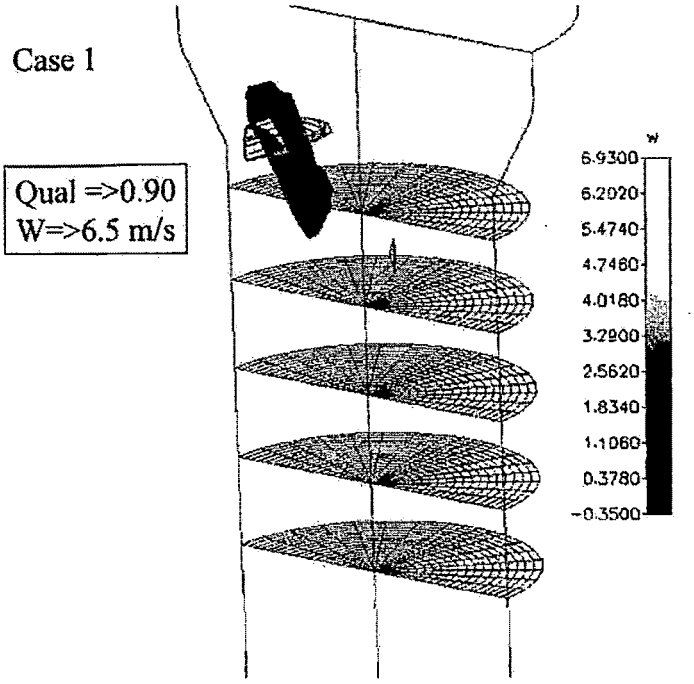


**Figure 3**

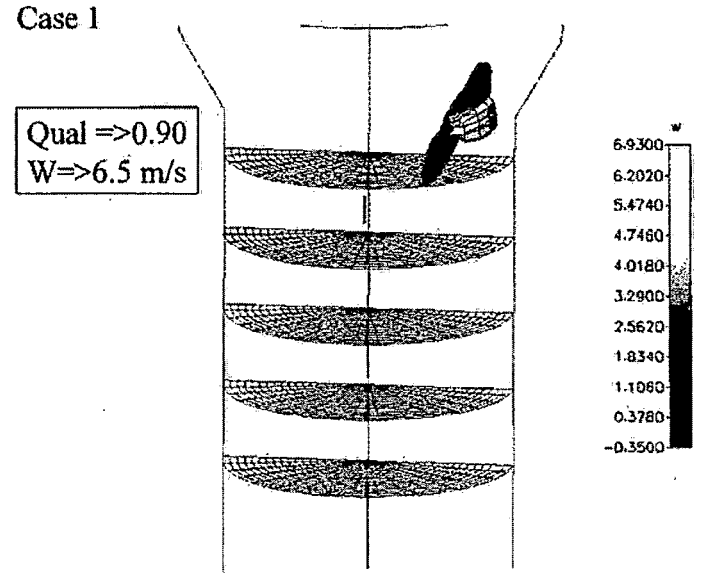

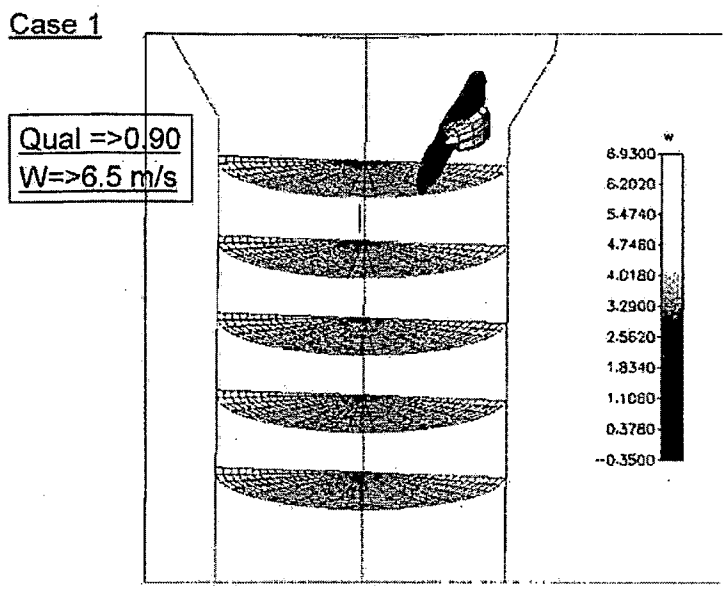
Case 1
Qual =>0.90
W=>6.5 m/s
W
6.9300
6.2020
5.4740
4.7460
4.0180
3.2900
2.5620
1.8340
1.1060
0.3780
-0.3500

**Figure 4**

Case 1

Qual =>0.90
w=>6.0 m/s

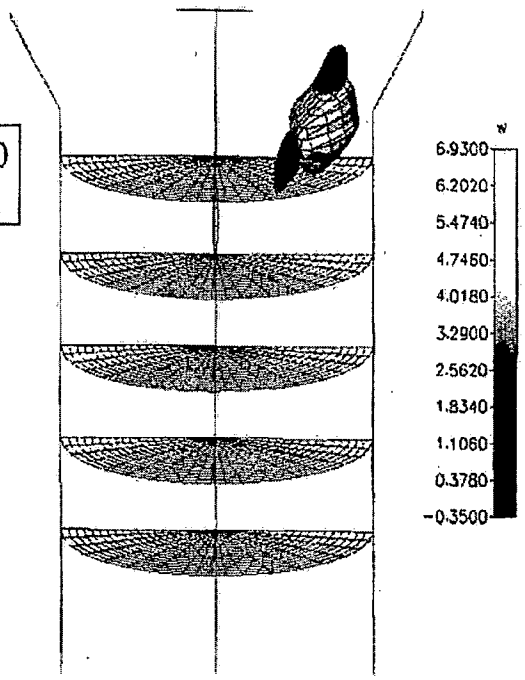

**Figure 5** ~~The ATHOS code predicted regions of high void fraction and high steam velocities are superimposed with tube-to-tube wear indications from Unit 3 steam generator 3E0-88~~

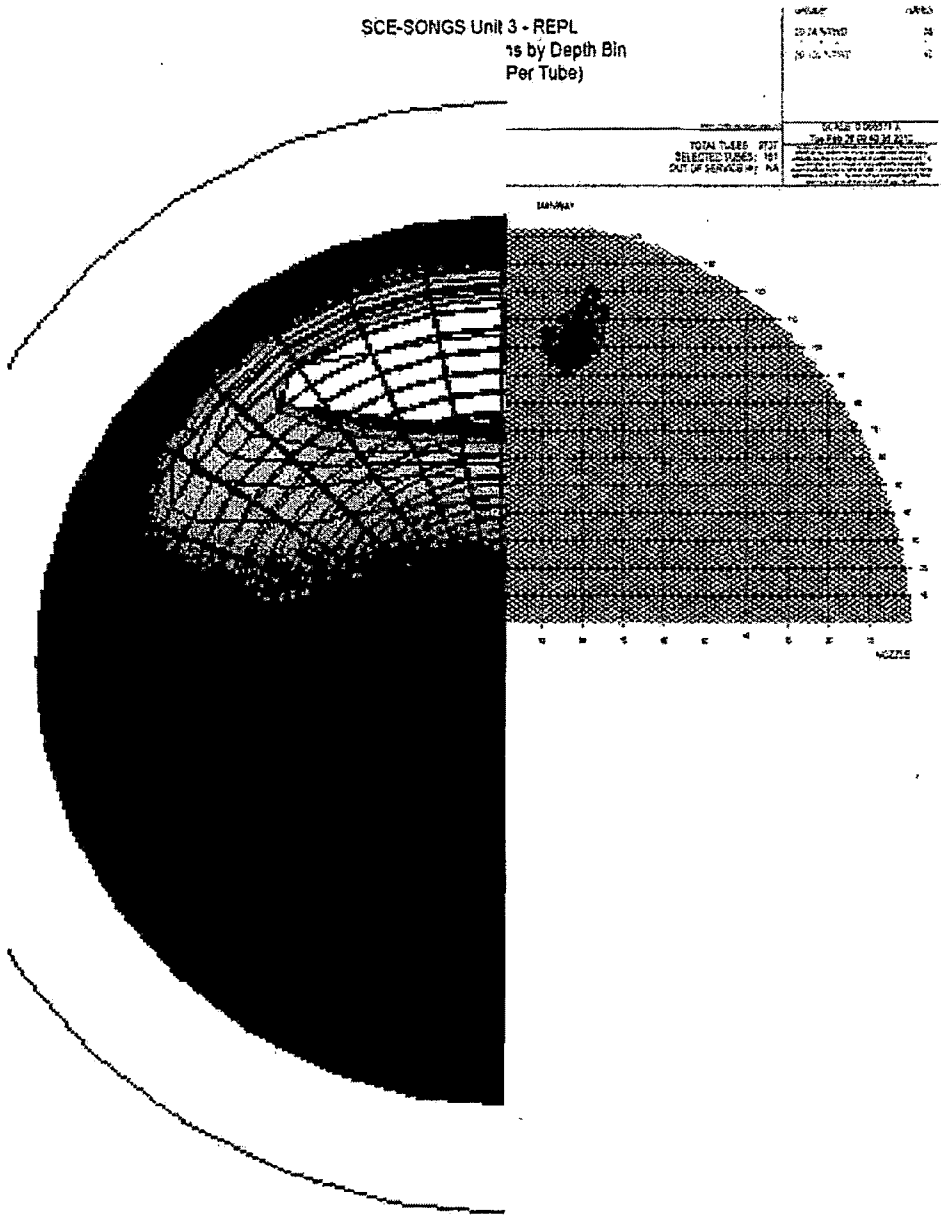


The NRC analysis indicated a correlation with the tube-to-tube wear based on a combination of high void fraction and high steam velocities. It should be noted that the traditional forcing function, fluid velocity squared times density, does not show good agreement with the tube-to-tube wear patterns. This indicated that the high quality steam fluid velocities and high void fraction may be sufficiently high to cause conditions in the generators conducive for onset of fluid-elastic instability.

The above analyses apply equally to Units 2 and 3, so it does not explain why the accelerated fluid-elastic instability wear damage was significantly greater in Unit 3 steam generators. The ATHOS thermal-hydraulic model predicts bulk fluid behavior based on first principals and empirical correlations and as a result it is not able to evaluate mechanical, fabrication, or structural material differences or other phenomena that may be unique to each steam generator. Therefore this analysis cannot account for these mechanical factors and differences which could very likely also be contributing to the tube degradation.

c. Conclusion

The team identified one unresolved item associated with the non-conservative FIT-III thermal-hydraulic model results.

Based on independent NRC thermal-hydraulic analysis, the team concluded that the SONGS replacement steam generators were not designed with adequate margin to preclude the onset of fluid-elastic instability. Therefore unless changes are made to the operation or configuration of the steam generators, high fluid velocities and high void fractions in localized regions in the u-bend will continue to cause excessive tube wear and accelerated wear that could result in tube leakage and/or tube rupture. The deficiencies appear to be related to Mitsubishi's FIT-III thermal hydraulic code having predicted non-conservative low velocity results and low void fractions. These results ~~led~~lead Mitsubishi to conclude that margins to instability were significantly larger than they actually are. This assessment is based on eddy current data, NRC ATHOS analysis, Mitsubishi ATHOS analysis, and other thermal-hydraulic analyses completed by Westinghouse and AREVA that all identified significantly higher fluid velocities and void fractions than FIT-III.

Based on the cause evaluation and corrective action plan, SCE determined that the best solution to prevent tube-to-tube wear was to conservatively plug and stabilize the affected areas. By taking the impacted tubes out-of-service, SCE determined that this should reduce the potential for localized fluid velocities reaching critical velocity. In addition, in order to ensure sufficient margin to preclude the onset of fluid-elastic instability, SCE determined that reactor power would also have to be reduced. At this time SCE is still developing additional corrective actions to prevent tube-to-tube wear. The actions have not been finalized and no determination has been made concerning the appropriate power level. The NRC has not made any conclusions on the proposed corrective actions. Once the corrective actions have been finalized, they will be ~~inspected~~reviewed and evaluated as part of the Confirmatory Action Letter followup inspection.

9.0 Risk Assessment (Charter Item 9)

a. Inspection Scope

The team reviewed the steam generator tube leak and failures of multiple steam generator tubes during in-situ pressure testing to support an assessment of the risk of the degraded steam generator tubes during various accident conditions, including a main steam line break accident.

b. Observations and Findings

No findings were identified.

An NRC senior reactor analyst ~~performed a preliminary~~ is currently working with SCE risk assessment. ~~The risk is composed of two parts: (1) a non-consequential steam line break that induces a steam generator tube rupture, specifically involving the degraded tubes; and (2) an elevated risk of a tube rupture as an initiating event.~~

~~Assuming that a steam line break would cause the degraded steam generator tubes~~ personnel to ~~rupture during a "T/2" exposure period of 6 months yielded a change in the large early release frequency of 4E-6/yr. However, SCE informed the NRC that a calculation is under review that will likely indicate that the differential pressures generated by a steam line break would not be large enough to rupture the degraded tubes as long as operators successfully implemented their emergency procedures. If this is confirmed,~~determine the risk associated with ~~steam line breaks will be significantly reduced.~~

~~Although in this case the degraded condition of the tubes was manifested as a small primary to secondary leak, it is possible that a full-blown rupture could have been the first indication. The baseline core damage frequency of a steam generator tube rupture, according to the SONGS SPAR model, is 4.26E-7/yr. Because of an unmitigated bypass of containment, the large early release frequency is also 4.26E-7/yr. Assuming conservatively that the steam generator tube rupture frequency would at least double, the increase in large early release frequency attributable to the degraded tubes would be approximately 2.13E-7/yr (taking into account a 6-month exposure period).~~

~~It should be noted, this is a preliminary assessment of the risk requiring additional information and inspection to ascertain whether a performance deficiency exists. This does not include or preclude regulatory or enforcement action by the NRC~~the loss of tube integrity for multiple tubes.

10.0 Assess Quality Assurance, Radiological Controls, and Safety Culture Components (Charter Item 10)

a. Inspection Scope

The team reviewed the event, operator actions, management decisions, steam generator eddy current examinations, in-situ pressure testing, and tube plugging and

stabilization activities to determine whether issues related to quality assurance, radiological controls, or safety culture existed.

b. Observations and Findings

No findings were identified.

Region IV radiation protection inspectors reviewed the estimated offsite radiation exposure from the actual steam generator tube leak on Unit 3 steam generator 3E0-88 that occurred on January 31, 2012, including the potential dose consequence to site workers and members of the public. The licensee determined that the Unit 3 steam generator tube leak resulted in a release of gaseous effluents into the public domain, and the primary radionuclides released were argon-41, xenon-133, and xenon-135. The release resulted in an estimated 0.0000452 (4.52 E-5) mrem dose to the public. Inspectors also reviewed design drawings and radiation monitor data, performed plants tours, and confirmed the licensee's use of the offsite dose calculation methodology.

~~c. Conclusions~~

~~The Region IV radiation protection~~The inspectors concluded that the Unit 3 steam generator tube leak was detected by the condenser steam jet air ejector radiation monitor 3RT-7820 as per design. In addition, the radiation monitor 3RT-7820 alarmed and alerted SONGS operators of the steam generator tube leak as required.

c. Conclusions

The radiation protection inspectors concluded that SCE appropriately accounted for the unplanned release associated with the Unit 3 steam generator tube leak.

11.0 Operational impacts from Unit 3 to Unit 2 (Charter Item 11)

a. Inspection Scope

As follow-on of the previous sections, the team reviewed collections of the Mitsubishi documents and presentations, licensee documents and presentations, and NRC independent analysis and assessments to consider the operational impact on Unit 2 based on analysis and data, including eddy current results, regarding the as-found condition of Unit 3. The team compared key observations and overall differences in operational parameters that are common to both units that could affect and possibly limit Unit 2 operation. The team focused on differences in fabrication, manufacturing, operation, and eddy current data results between Units 2 and 3 steam generators.

b. Observations and Findings

No findings were identified.

Since generator physical dimensions and design are identical, the operational parameters are basically the same between the Unit 2 and 3 steam generators; therefore, the hydraulic forcing function that caused tube-to-tube wear and accelerated anti-vibration bar and tube support plate wear should also be same. The initial inspections of the Unit 2 steam generators did not indicate significant wear except at the retainer bars (different mechanism caused this wear). However, subsequent follow up inspections in Unit 2 with a more sensitive probe confirmed the existence of minor tube-to-tube wear in two neighboring tubes but in one of the steam generators. The tube-to-tube wear that was found in Unit 2 was in a similar location as that found in both of the Unit 3 steam generators.

The phenomenon of fluid-elastic instability is a function primarily of two criteria: the fluid velocity forces and the damping capability of the support structure (i.e., the tube support plates, the tubesheet, and the anti-vibration bars). Therefore, if it is determined that the thermal hydraulic forces in the bundle are the same, it can be concluded that the damping forces between the Unit 2 and Unit 3 replacement steam generators must be different. Mitsubishi performed several studies that indicated that gap contact forces in the anti-vibration bars were greater in Unit 2 than in Unit 3. However, with the exception of manufacturing data that shows slight differences, there is not currently a method available to measure the clearances between the anti-vibration bars and the tubes; however, SCE is currently working with AREVA to develop a method to take these measurements.

The tube damage found in Unit 3 is markedly more severe than Unit 2, especially considering that Unit 3 operated only about half the amount of time as Unit 2. This suggests that there is indeed a sizeable difference in the damping capability of the unit steam generators.

There are generally two options to arrest localized damaging thermal hydraulic phenomena in steam generators. The first and preferred option is to plug tubes in the affected area. The collective plugging tends to relocate and reduce high fluid velocities and void fractions, and has on previous occasions in industry been successful.

However, if plugging selected tubes does not provide significant margins adequate to arrest the damage mechanism, thermal hydraulic conditions can be reduced through a reduction in power. Reducing power has several beneficial effects including (1) tends to increase steam pressure, (2) reduces high steam fluid velocities and high void fraction in the bundle, and (3) improves damping. Currently, SCE is still reviewing and developing additional corrective actions to preclude fluid-elastic instability. The NRC has been observing some of the mockup testing being used to qualify additional repair activities.

c. Conclusions

Based on the review of actual operating data and independent thermal-hydraulic modeling analyses, the team determined that there were ~~no~~not any major differences in the thermal hydraulic phenomena at normal full power operation.

The NRC will review both physical and operational changes that SCE completes as part of the Confirmatory Action Letter inspections.

12.0 Divider Plate Manufacturing and Weld Issues (Mitsubishi Charter Item 2)

a. Inspection Scope

On March 18, 2009, Mitsubishi identified cracking indications in the weld between the divider plate and the channel head of Unit 3 replacement steam generator 3E0-88 (see figure below), after completion of the ASME Section III hydrostatic test on the secondary side. The extent of condition investigation also identified similar cracking indications in Unit 3 replacement steam generator 3E0-89. As discussed in Section 4 of this report, the cause of the cracking was attributed to the air carbon-arc gouging process used to remove the clad weld from the channel head. The team reviewed information associated with the repair of the cracking indications to assess whether the repair activities resulted in relevant differences in design and fabrication that could be considered as contributing factors for the cause of the tube-to-tube wear issue in Unit 3.

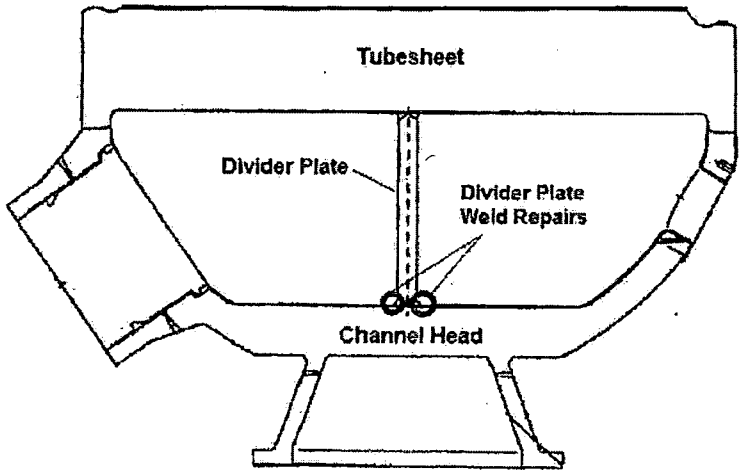


Location of Divider Plate Weld Repairs in Unit 3 Steam Generators (For Illustration Purposes Only)

b. Observations and Findings

No findings were identified.

The team identified an unresolved item for which additional information is required to determine if a performance deficiency exists or if the issue constitutes violation of NRC requirements. The team also identified several observations related to the divider plate weld repairs in Unit 3 replacement steam generators.

1) Introduction: The team identified an Unresolved Item associated with the adequacy of evaluation and controls for the divider plate weld repairs.

Description: The cracking of the divider plate weld in both Unit 3 replacement steam generators required extensive repairs affecting the channel head, divider plate, and tubesheet. Based on interviews with licensee personnel and the review of documentation for the repairs, the team determined that Mitsubishi did not perform a comprehensive evaluation to assess the impact of the divider plate repairs on the integrity of the tube bundle. The team determined that the areas listed below were not considered or evaluated in sufficient depth to identify the potential adverse effects of the planned weld repairs.

- Additional Rotations – The repair activities for the Unit 3 steam generators required additional rotations of the steam generator assembly while these were oriented in the horizontal position. The repairs resulted in approximately 300 additional rotations in each steam generator, which could have affected the configuration of the tube bundle in terms of anti-vibration bar gaps or distortion. The team identified that Mitsubishi did not fully evaluate the impact of additional rotations on the configuration of the steam generators since rotation was considered a normal evolution in the fabrication process.

- Heat Input – The repair process included extensive heat-adding activities such as grinding, flame cutting, and post-weld heat treatment. While these activities were performed in accordance with the construction code of record and an approved repair plan, they could have resulted in thermal expansion and unintended distortion of steam generator components. For example, the channel heads were removed using flame cutting and Mitsubishi's evaluation for the impact of this activity was limited to the base material area in the vicinity of the cut, i.e. the heat affected zone. Mitsubishi did not fully assess the impact this activity could have on the overall configuration of the steam generator in terms of thermal expansion of the tubesheet or distortion.

- Dimensional Checks after Repair – The team identified that Mitsubishi did not perform dimensional verifications (e.g. clearances) of the tube bundle or other secondary side dimensions after the repairs of the Unit 3 steam generators to confirm that critical dimensions were not affected by the repairs.

Additional review by the NRC is required following completion of the licensee's cause evaluation to fully assess how the repair activities affected the Unit 3 replacement steam generators and then determine whether this issue represents a performance

deficiency or constitutes a violation of NRC requirements. This issue is identified as URI 05000362/2012007-09, "Evaluation of the Effects of Divider Plate Weld Repairs in Unit 3 Replacement Steam Generators."

2) Repair Plan: The team noted that Mitsubishi developed a specific plan to conduct the repair of the divider plate weld in both Unit 3 replacement steam generators. The repair plan adequately described the major repair steps and the required implementing procedures. For some of the repair stages, the licensee developed new procedures to prescribe activities outside the normal fabrication sequence. The repair plan consisted of the following major steps:

   - Cutting off the divider plate from the tubesheet by grinding
   - Cutting off the channel head from the tubesheet by flame cutting
   - Cutting the divider plate from the channel head by grinding
   - Removal of the heat affected zone of the channel head bowl edge due to flame cutting
   - Application of weld buildup and post-weld heat treatment on the channel head bowl edge
   - Application of low alloy steel buildup and Alloy 690 butter on the bottom of the channel head for divider plate welding, including required post-weld heat treatment
   - Application of Alloy 690 buildup on the divider plate, including required post-weld heat treatment
   - Welding divider plate to channel head
   - Welding the divider plate to the tubesheet
   - Welding the channel head to the tubesheet
   - Primary side hydrostatic test

3) Differences between Replacement Steam Generators: The team identified the notable differences listed below between Unit 2 and Unit 3 replacement steam generators as a result of the divider plate weld repair activities.

   - Material Class for the Tubesheets – The tubesheet material for both Unit 3 replacement steam generators was reclassified to facilitate the additional post-weld heat treatment required for the repair of the divider plate welds. The tubesheet manufacturer originally certified that the tubesheet material met the requirements of ASME specification SA-508/Grade 3/Class 2, with a post-weld heat treatment time of approximately 15 hours. The repair activities in Unit 3 required additional post-weld heat treatment, which was expected to affect the properties of the tubesheet material to the extent that the mechanical properties would not meet the requirements for SA-508/Grade 3/Class 2 material. Mitsubishi performed mechanical testing on a specimen fabricated from the archive samples that was exposed to 30 hours of post-weld heat treatment and the tests showed that the tubesheet material's tensile strength did not meet the ASME specifications for SA-508/Grade 3/Class 2 material. Mitsubishi performed a reconciliation review to reclassify the material to SA-508/Grade 3/Class 1,

which has a lower tensile strength. The reconciliation included an evaluation of resulting stresses on the tubesheet under design, upset, emergency, faulted, and test conditions using the material properties for SA-508/Class 1 material. The evaluation resulted in acceptable stresses based on the stress limits imposed by the construction code of record. This issue was evaluated by Mitsubishi in the non-conformance report process and Supplier Deviation Request SDR-08610041870-09086 was submitted to the licensee for review and approval. The licensee approved the reclassification of the tubesheet material.

- Minimum Thickness of the Channel Head Base Metal – The channel heads of both Unit 3 steam generators were removed by flame cutting to facilitate the divider plate weld repairs. The removal and final welding of the channel head resulted in a reduction of the minimum wall thickness of the channel head base metal. The minimum base metal thickness was reduced by 1.18-inches. Mitsubishi evaluated this change in the "Design Report for the Channel Head Region." The reduction in minimum wall thickness was addressed through a reconciliation of stress ratios based on the stress limits imposed by the construction code of record. The analysis demonstrated the structural adequacy of the channel head, primary inlet nozzle, primary outlet nozzle, primary manway, support skirt, and the stud bolts of the primary manway.

- Number of Bolts in the Divider Plate Patch Plates – The original design of the replacement steam generators included a patch plate held in place at the upper corners of the divider plate by three bolts. As a result of the divider plate-to-tubesheet weld removal to support the repair activities, the Unit 3 divider plate patch plates were modified to be held by two bolts instead of the three bolts specified in the original design. Mitsubishi submitted this design change to the licensee for review and approval. Licensee personnel approved the design change as requested.

- Weld Buildup on Channel Head Surfaces – Since the repair of the divider plate welds in Unit 3 steam generators required cutting of the channel head, weld buildup had to be applied on the affected surfaces in order to restore the dimensions to design specifications. Mitsubishi submitted this design change to the licensee for review and approval. Licensee personnel approved the design change as requested.

- Post Weld Heat Treatment – The tubesheet-to-channel head weld area experienced a total of two post-weld heat treatments. Both Unit 3 replacement steam generators received an additional local post-weld heat treatment at approximately 1103° F for approximately 3.5 hrs. Mitsubishi submitted this fabrication process change to the licensee for review and approval. Licensee personnel approved the design change as requested.

- Total of Rotations during Fabrication – The total number of rotations on each steam generator varied as a result of the hydrostatic test results and the repairs on the divider plate welds.

| Steam Generator | Initial Rotations | Additional Rotations for Divider Plate Repairs | Total Rotations |
|---|---|---|---|
| Unit 2 E0-89 | 520 | 0 | 520 |
| Unit 2 E0-88 | 510 | 0 | 510 |
| Unit 3 E0-89 | 470 | 340 | 810 |
| Unit 3 E0-88 | 440 | 320 | 760 |

c. Conclusions

The team identified one unresolved item associated with the repair work done on the Unit 3 divider plate. The team did not identify any connection between ~~the repairs of the divider plate~~these shipping changes and the unexpected tube-to-tube wear.

13.0 Office of Nuclear Reactor Regulation (NRR) Review of SONGS 50.59 Evaluation

a. Inspection Scope

The NRR technical specialist reviewed all of the design changes associated with the replacement steam generators to determine whether the changes to the facility or procedures, as described in the updated final safety analysis report, had been reviewed and documented in accordance with 10 CFR 50.59 requirements. The technical specialist reviewed the various information used by SCE to review the changes being made to the replacement steam generators, including calculations, analyses, design change documentation, procedures, the updated final safety analysis report, the technical specifications, and plant drawings. The evaluation process used by the technical specialist included determining if the design changes to the replacement steam generators were a change to the facility or procedures as described in the updated final safety analysis report or a test or experiment not described in the updated final safety analysis report. The technical specialist also verified that safety issues related to the changes were resolved. The technical specialist compared the safety evaluations and supporting documents to the guidance and methods provided in NEI 96-07, "Guidelines for 10 CFR 50.59 Implementation," Revision 1, as endorsed by NRC Regulatory Guide 1.187, "Guidance for Implementation of 10 CFR 50.59, Changes, Tests, and Experiments," to determine the adequacy of the 10 CFR 50.59 evaluations.

b. Observations and Findings

No findings were identified

The NRR technical specialist identified one unresolved item for which additional information is required to determine if performance deficiencies exist or if the issues constitute violations of NRC requirements.

(1) Introduction: The NRR technical specialist reviewed SCE's 10 CFR 50.59 evaluation contained in Engineering Change Packages 800071702 and 800071703 for the Unit 2 and Unit 3 replacement steam generators, respectively, in which SCE determined that the impact of the replacement steam generators on the current licensing basis and any need for NRC approval as required by 10 CFR 50.59.

(2) Description: The NRR technical specialist reviewed the SCE's 10 CFR 50.59 evaluation against 10 CFR 50.59(c)(2)(viii) which requires that licensees obtain a license amendment pursuant to 10 CFR 50.90 prior to implementing a proposed change if the change would result in a departure from a method of evaluation described in the final safety analysis report (as updated) used in establishing the design bases or in the safety analyses. Industry guidance NEI 96-07, Revision 1, Section 3.10, "Methods of Evaluation," states, "Definition: Methods of evaluation means the calculational framework used for evaluating behavior or response of the facility or structures, systems, and components." Regulation 10 CFR 50.59 a(2), states, "*Departure from a method of evaluation described in the FSAR (as updated) used in establishing the design bases or in the safety analyses* means (i) changing any of the elements of the method described in the FSAR (as updated) unless the results of the analysis are conservative or essentially the same; or (ii) changing from a method described in the FSAR to another method unless that method has been approved by NRC for the intended application." Regulation 10 CFR 50.59(d)(1) requires that the licensee maintain records of changes in the facility that "includes a written evaluation which provides the bases for the determination that the change, test, or experiment does not require a license amendment...." The technical specialist evaluated SCE's bases for determining that the changes would not result in the departure from the method of evaluation used in establishing the design bases or in the safety analyses. Specifically, the technical specialist evaluated whether the changes involved:

(a) changing of any of the elements of the method described in the updated final safety analysis report, which consistent with 10 CFR 50.59 a(2)(i) would be justified by demonstrating that the results of the analysis are conservative or essentially the same; or

(b) changing from a method described in the updated final safety analysis report to another method, which consistent with 10 CFR 50.59 a(2)(ii) would be justified by demonstrating that method has been approved by NRC for the intended application.

The NRR technical specialist reviewed SCE's 10 CFR 50.59 evaluation and found two instances that failed to adequately address whether the change involved a departure of the method of evaluation described in the updated final safety analysis report.

(a) Use of ABAQUS instead of ANSYS: Updated Final Safety Analysis Report Sections 3.9.1.2.2.1.11 and 3.9.1.2.2.2.3 were revised to reflect that the SONGS Unit 2 and 3 original steam generators stress analyses for reactor coolant system structural integrity utilized the ANSYS computer program, whereas the replacement steam generators analyses utilized the ABAQUS computer program. The SCE's 50.59 evaluation incorrectly determined that using the ABAQUS instead of ANSYS was a change to an element of the method described in the updated final safety analysis report did not constitute changing from a method described in the updated final safety analysis report to another method, and as such, did not mention whether ABAQUS has been approved by the NRC for this application.

(b) Use of ANSYS instead of STRUDL and ANSYS: Updated Final Safety Analysis Report Section 5.4.2.3.1.3 was revised to reflect that the SONGS Unit 2 and 3 evaluation of tube stress under loss of coolant accident conditions for the original steam generators consisted of a two-step process utilizing the STRUDL and ANSYS computer programs to calculate displacement histories and tube stresses, respectively, while the corresponding replacement steam generators analysis determined tube stresses from blowdown forces using only the ANSYS computer program. While SCE's 50.59 evaluation correctly considered this a change from a method described in the FSAR to another method, the 50.59 evaluation did not mention whether the method has been approved by NRC for this application.

This issue is identified as URI 05000362/2012007-10, "Evaluation of Departure of Method of Evaluation for 10 CFR 50.59 Processes."

c. Conclusions

The NRR technical specialist identified one unresolved item associated with a change in the method of evaluation as described in the updated final safety analysis report. Additional review and followup will be required to review the departure of the method of evaluation used during the stress analysis calculations associated with the replacement steam generators.

14.0 Exit Meeting Summary

On June 18, 2012, the NRC held a public meeting and presented the inspection results to Mr. P. Dietrich, Senior Vice President and Chief Nuclear Officer, and other members of the staff, who acknowledged the findings. Proprietary information was provided to the team and all proprietary information was returned to SCE.

**SUPPLEMENTAL INFORMATION**
**KEY POINTS OF CONTACT**

Licensee Personnel

P. Dietrich, Senior Vice President and Chief Nuclear Officer
R. Litzinger, President, SCE
D. Bauder, Vice President and Station Manager
T. Palmisano, Vice President of Engineering, Projects and Site Support
T. McCool, Plant Manager
T. Yackle, Assistant Plant Manager
D. Yarbrough, Director, Operations
R. Corbett, Director, Performance Improvement
O. Flores, Director, Nuclear Oversight
R. St. Onge, Director, Nuclear Regulatory Affairs
B. Winn, Director, Nuclear Financial Management
E. Avella, Director, Project Management
M. Coveney, Director, Nuclear Leadership
M. Stevens, Technical Specialist, Nuclear Regulatory Affairs
C. Cates, Manager, Nuclear Safety Culture and Site Recovery
M. Malzahn, Engineer, Project Management
C. Harberts, Manager, Steam Generator Replacement Project
M. Mihalik, Senior Engineer, Project Management Organization
R. McWey, Manager, Nuclear Oversight
M. Pawlaczyk, Technical Specialist, Nuclear Regulatory Affairs
J. Peattie, Manager, Maintenance
R. Treadway, Manager, Nuclear Regulatory Affairs
B. Olech, Consulting Engineer, Edison
JD. Brabec, Project Manager, Steam Generator Recovery Program
D. Calhoun, Senior Engineer, Design Engineering Organization, Edison

Mitsubishi Personnel

H. Kaguchi, Mitsubishi Heavy Industries, Director, Component Designing Department
I. Otake, Mitsubishi Heavy Industries, Deputy Chief Engineer, Quality Assurance Department
T. Tsuruta, Mitsubishi Heavy Industries, Engineer, Quality Assurance Department
T. Inoue, Mitsubishi Heavy Industries, Deputy Director, Plant Designing Department
H. Hirano, Mitsubishi Heavy Industries, Project Manager, Overseas Project, Component Designing Department
R. Bywater, Mitsubishi Nuclear Energy Systems, COLA Project Manager
F. Gillespie, Mitsubishi Nuclear Energy Systems, Senior Vice President
R. Godley, Mitsubishi Nuclear Energy Systems, Deputy General Manager, Licensing Support

Other Contractor Personnel

R. Walker, MPR Consultant
M. Short, Consultant
B. Marlow, AREVA, Vice President, Key Accounts
M. Street, AREVA, Manager, Primary Component Projects and Warranty Support

M. Miller, AREVA, Advisory Engineer
S. Claunch, AREVA, Advisory Engineer

NRC Personnel
T. Blount, Deputy Division Director, Division of Reactor Safety
R. Lantz, Branch Chief, Projects Branch D
G. Warnick, Senior Resident Inspector

## LIST OF ITEMS OPENED, CLOSED AND DISCUSSED

Opened

| | | |
|---|---|---|
| 05000362/2012007-01 | URI | Adequacy of the Trip/Transient and Event Review Procedure (Section 1) |
| 05000362/2012007-02 | URI | Evaluation of Unit 3 Vibration and Loose Parts Monitoring System Alarms (Section 3) |
| 05000362/2012007-03 | URI | Evaluation of Retainer Bars Vibration during the Original Design of the Replacement Steam Generators (Section 4 |
| 05000362/2012007-04 | URI | Evaluation of Changes in Dimensional Controls during the Fabrication of Unit 2 and Unit 3 Replacement Steam Generators (Section 4) |
| 05000362/2012007-05 | URI | Shipping Requirements not in Accordance with Industry Standards (Section 7) |
| 05000362/2012007-06 | URI | Shipping Requirements not in Accordance with Design and Fabrication Specifications (Section 7) |
| 05000362/2012007-07 | URI | Unit 3 Steam Generator 3E0-88 Stresses Related to Handling (Section 7) |
| 05000362/2012007-08 | URI | Non-Conservative Thermal-Hydraulic Model Results (Section 8) |
| 05000362/2012007-09 | URI | Evaluation of the Effects of Divider Plate Weld Repairs in Unit 3 Replacement Steam Generators (Section 12) |
| 05000362/2012007-10 | URI | Evaluation of Departure of Method of Evaluation for 10 CFR 50.59 Processes (Section 13) |

Closed

None

Discussed

None

## LIST OF DOCUMENTS REVIEWED

AUDITS/SELF-ASSESSMENTS/QUALITY CONTROL DRAWINGS

SONGS DOCUMENTS

| Number | Title | Revision/Date |
|---|---|---|
| MHI-1-06 | Southern California Audit of Mitsubishi Heavy Industries | June 16, 2006 |
| MHI-1-09 | Southern California Audit of Mitsubishi Heavy Industries | April 27, 2009 |
| MHI-2-04 | Southern California Audit of Mitsubishi Heavy Industries | December 14, 2004 |
| SCES-007-10 | Procurement and Material Control Program Audit | September 14, 2010 |
| MHI-01-04 | Evaluation and Review of Contractor, Consultant, Utility or Licensee Audit Report | September 24, 2004 |
| | Status of Southern California Edison (SCE) Corrective Action Request (CAR) Nos. S-1918 and S-1932 Closure | March 23, 2007 |
| | Southern California Edison (SCE) Corrective Action Request (CAR) No. S-1991, Supplier Stop Work Order (SSWO) No. SSWO-001-08 | 1 |
| | RSG-SCE/MHI-06-2233 – Southern California Edison (SCE) Corrective Action Request (CAR) No. S-1882 Closure | May 3, 2006 |
| | RSG-SCE/MHI-06-1916 - Southern California Edison (SCE) Corrective Action Request, (CAR) No. S-1906 Closure | February 22, 2006 |
| | Southern California Edison (SCE) Audit No. MHI-1-06 and Corrective Action Request (CAR) Nos. S-1915, S-1916, S-1917, and S-1918 | January 31, 2008 |
| AR# 040901345 | Qualification Letter | September 24, 2004 |
| AR#050301458 | Qualification Letter | March 23, 2005 |

| Number | Title | Revision/Date |
|---|---|---|
| AR#060500134 | Qualification Letter | May 10, 2006 |
| 6C294014 | Edison Material Supply Procurement Order for Mitsubishi Heavy Industries | September 28, 2004 |
| SO23-617-01 | Specifications for design and fabrication of RSG for Unit 2 and Unit 3 | 4 |
| SO23-617-02 | Specifications for Baseline Pre-Service Examination on Tubing for RSG | 1 |
| SO23-617-03 | Replacement Steam Generator Installation Unit 2 and 3 | 4 |
| SO23-617-04 | Specifications for the Transportation of Replacement Steam Generators | 1 |
| TL C001783 | San Onofre Topical Report Quality Assurance Manual | 64 |
| TL C001782 | San Onofre 2&3 FSAR Updated Quality Assurance Program Topical Report SCE-1 | 15 |
| | SONGS Unit 2 & 3 Replacement Steam Generator QA/QC Manufacturing Oversight Plan Japan Steel Works | 0 |
| | SONGS Unit 2 & 3 Replacement Steam Generator QA/QC Oversight Plan | 1 |
| | SONGS Unit 2 & 3 Replacement Steam Generator Receipt Inspection Plan | 0 |
| SGR-A10183 | Replacement Steam Generator Resident Oversight Plan | 1 |
| SGR-A10159 | San Onofre Nuclear Generating Station Unit 2 & 3 Steam Generator Replacement Project Plan | 1 |
| MHI-1SV-05 | Source Verification Report of MHI/Japan Steel Work | March 15, 2005 |
| MHI-1SV-06 | Source Verification Report of MHI/Japan Steel Work | February 7, 2006 |
| MHI-1SV-07 | Source Verification Report of MHI | March 20, 2007 |
| MHI-1SV-08 | Source Verification Report of MHI/Japan Steel Work | August 29, 2008 |
| MHI-2SV-05 | Source Verification Report of MHI | April 1, 2005 |
| MHI-2SV-06 | Source Verification Report of MHI/Japan Steel Work | March 24, 2006 |

| Number | Title | Revision/Date |
|---|---|---|
| MHI-2SV-07 | Source Verification Report of MHI | November 2, 2007 |
| MHI-3SV-05 | Source Verification Report of MHI/Japan Steel Work | May 3, 2005 |
| MHI-3SV-06 | Source Verification Report of MHI | May 3, 2006 |
| MHI-4SV-05 | Source Verification Report of MHI/Japan Steel Work | May 4, 2005 |
| MHI-4SV-06 | Source Verification Report of MHI/Japan Steel Work | May 23, 2006 |
| MHI-5SV-05 | Source Verification Report of MHI/Japan Steel Work | June 10, 2005 |
| MHI-5SV-06 | Source Verification Report of MHI | September 26, 2006 |
| MHI-6SV-05 | Source Verification Report of MHI | July 1, 2005 |
| MHI-6SV-06 | Source Verification Report of MHI | January 24, 2007 |
| MHI-7SV-05 | Source Verification Report of MHI/Japan Steel Work | August 12, 2005 |
| MHI-7SV-06 | Source Verification Report of MHI | January 16, 2007 |
| MHI-8SV-05 | Source Verification Report of MHI | March 26, 2007 |
| MHI-9SV-05 | Source Verification Report of MHI/Japan Steel Work | October 13, 2005 |
| MHI-10SV-05 | Source Evaluation Report of MHI | February 8, 2006 |
| MHI-11SV-05 | Source Verification Report of MHI/Japan Steel Work | December 21, 2005 |

CALCULATIONS

| Number | Title | Revision |
|---|---|---|
| SO23-617-1-C275 | Design Report of the Channel Head Region | 6 |
| SO23-617-1-C514 | Design for RCS Flow Rate | 1 |
| SO23-617-1-M1562 | Retainer Bar Tube Wear Report | 0 |

DESIGN BASIS DOCUMENTS

| Number | Title | Revision |
|---|---|---|
| SO23-617-01 | Specification for Design and Fabrication of RSGs for Unit 2 and Unit 3 | 4 |
| SO23-617-1-M1492 | As-Built Reconciliation Report for Unit 3 | 2 |
| L5-04GA428 | Design of Anti-Vibration Bar | 5 |
| DBD-SO23-365 | Design Basis for Steam Generator and Secondary Side | 10 |

DESIGN CHANGE NOTIFICATIONS/SUPPLIER DEVIATION REQUESTS

| Number | Title | Revision |
|---|---|---|
| NECP 800071703 | Engineering Change Package, "Replacement Steam Generators" | 0 |
| SDR-007 43366-05007 | Circulation Ratio for RSG | 0 |
| SDR-037 43366-06037 | Tube-to-Tube Clearance in 2A RSG | 0 |
| SDR-047 43366-07047 | Tool Mark in 3A Tubesheet | 0 |
| SDR-050 43366-07050 | Tool Mark in 3B Tubesheet | 0 |
| SDR-051 43366-07051 | Unit 2A Lower Shell Assembly | 0 |

| Number | Title | Revision |
|---|---|---|
| SDR-053 43366-07053 | Unit 2B Lower Shell Assembly | 0 |
| SDR-059 43366-08059 | Unit 3B Lower Shell Assembly | 0 |
| SDR-064 43366-08064 | Axial Length of AVB | 0 |
| SDR-079 43366-08079 | Statistical Size of Tube-to-AVB Gap | 0 |
| SDR-082 43366-09082 | Divider Plate Repair of Unit 3 RSGs | 0 |
| SDR-086 10041870-09086 | Specifications for Unit 3 RSG Tube Material | 0 |
| SDR-098 10041870-10098 | Overall Height of 3A RSG | 0 |
| SDR-099 10041870-10099 | Perpendicularity and Parallelism of 3A RSG Key Bracket | 0 |
| SDR-100 10041870-10100 | Parallelism of 3B RSG Key Bracket | 0 |

DRAWINGS

| Number | Title | Revision |
|---|---|---|
| SO23-617-1-D103 | Design Drawing – Component and Outline Drawing 1 / 3 | 5 |
| SO23-617-1-D104 | Design Drawing – Component and Outline Drawing 1 / 3 | 2 |
| SO23-617-1-D106 | Design Drawing Tubesheet and Extension Ring 1 of 3 | 12 |
| SO23-617-1-D107 | Design Drawing Tubesheet and Extension Ring 2 of 3 | 5 |
| SO23-617-1-D108 | Design Drawing Tubesheet and Extension Ring 3 of 3 | 8 |
| | | |

| Number | Title | Revision |
|---|---|---|
| SO23-617-1-D109 | Design Drawing Lower Shell, Middle Shell, Transition Cone and Upper Shell Stub 1 of 4 | 5 |
| SO23-617-1-D110 | Design Drawing Lower Shell, Middle Shell, Transition Cone and Upper Shell Stub 2 of 4 | 7 |
| SO23-617-1-D111 | Design Drawing Lower Shell, Middle Shell, Transition Cone and Upper Shell Stub 3 of 4 | 4 |
| SO23-617-1-D112 | Design Drawing Lower Shell, Middle Shell, Transition Cone and Upper Shell Stub 4 of 4 | 4 |
| SO23-617-1-D113 | Design Drawing Channel Head 1 of 4 | 9 |
| SO23-617-1-D113 | Design Drawing Channel Head 1 of 4 | 15 |
| SO23-617-1-D114 | Design Drawing Channel Head 2 of 4 | 13 |
| SO23-617-1-D115 | Design Drawing Channel Head 3 of 4 | 5 |
| SO23-617-1-D116 | Design Drawing Tube Bundle 1 of 3 | 1 |
| SO23-617-1-D117 | Design Drawing Tube Bundle 2 of 3 | 1 |
| SO23-617-1-D118 | Design Drawing Tube Bundle 3 of 3 | 3 |
| SO23-617-1-D159 | Design Drawing Upper Shell, Upper Head Ring and Upper Head Top 1 of 4 | 7 |
| SO23-617-1-D160 | Design Drawing Upper Shell, Upper Head Ring and Upper Head Top 2 of 4 | 2 |
| SO23-617-1-D161 | Design Drawing Upper Shell, Upper Head Ring and Upper Head Top 3 of 4 | 4 |
| SO23-617-1-D162 | Design Drawing Upper Shell, Upper Head Ring and Upper Head Top 4 of 4 | 2 |
| SO23-617-1-D210 | Design Drawing of Moisture Separator Assembly 1 of 6 | 10 |
| SO23-617-1-D211 | Design Drawing of Moisture Separator Assembly 2 of 6 | 10 |

| Number | Title | Revision |
|---|---|---|
| SO23-617-1-D212 | Design Drawing of Moisture Separator Assembly 3 of 6 | 5 |
| SO23-617-1-D274 | Design Drawing Channel Head 4 of 4 | 4 |
| SO23-617-1-D294 | Design Drawing Tube Support Plate Assembly 1 of 3 | 3 |
| SO23-617-1-D295 | Design Drawing Tube Support Plate Assembly 2 of 3 | 4 |
| SO23-617-1-D296 | Design Drawing Tube Support Plate Assembly 3 of 3 | 5 |
| SO23-617-1-D383 | Design Drawing – Critical Field Interface Dimensions and Major Tolerances 1 / 3 | 7 |
| SO23-617-1-D391 | Design Drawing Wrapper Assembly 1 of 5 | 5 |
| SO23-617-1-D392 | Design Drawing Wrapper Assembly 2 of 5 | 0 |
| SO23-617-1-D393 | Design Drawing Wrapper Assembly 3 of 5 | 2 |
| SO23-617-1-D394 | Design Drawing Wrapper Assembly 4 of 5 | 2 |
| SO23-617-1-D395 | Design Drawing Wrapper Assembly 5 of 5 | 3 |
| SO23-617-1-D494 | Design Drawing – Divider Plate1 / 2 | 10 |
| SO23-617-1-D495 | Design Drawing – Divider Plate 2 / 2 | 6 |
| SO23-617-1-D507 | Design Drawing Anti-Vibration Bar Assembly 1 of 9 | 4 |
| SO23-617-1-D508 | Design Drawing Anti-Vibration Bar Assembly 2 of 9 | 2 |
| SO23-617-1-D509 | Design Drawing Anti-Vibration Bar Assembly 3 of 9 | 0 |
| SO23-617-1-D539 | Design Drawing Anti-Vibration Bar Assembly 4 of 9 | 0 |

| Number | Title | Revision |
|---|---|---|
| SO23-617-1-D540 | Design Drawing Anti-Vibration Bar Assembly 5 of 9 | 2 |
| SO23-617-1-D541 | Design Drawing Anti-Vibration Bar Assembly 6 of 9 | 2 |
| SO23-617-1-D542 | Design Drawing Anti-Vibration Bar Assembly 7 of 9 | 8 |
| SO23-617-1-D543 | Design Drawing Anti-Vibration Bar Assembly 8 of 9 | 3 |
| SO23-617-1-D544 | Design Drawing Anti-Vibration Bar Assembly 9 of 9 | 1 |
| SO23-617-1-D680 | Design Drawing – Tubing Expansion and Seal Welding | 3 |
| SO23-617-1-D1099 | Fabrication Drawing – General Shipping Arrangement [SON 2E89; SON 2E882E0-88] | 2 |
| SO23-617-1-D1100 | Fabrication Drawing – General Shipping Arrangement [SON 3E89; SON 3E88] | 2 |
| SO23-617-1-D1488 | Fabrication Drawing – Temporary Attachment For Channel Head and Tubesheet Welding (Unit 3) | 0 |
| L5-04FW111 | Detail of AVB 1 of 5 (Center Narrow AVB) | 6 |
| L5-04FW112 | Detail of AVB 2 of 5 (Center Wide AVB) | 2 |
| L5-04FW113 | Detail of AVB 3 of 5 (Side Narrow AVB) | 2 |
| L5-04FW114 | Detail of AVB 4 of 5 (Side Wide AVB for Hot Side) | 2 |
| L5-04FW115 | Detail of AVB 5 of 5 (Side Wide AVB for Cold Side) | 2 |

ENGINEERING REPORTS (ER)

| Number | Title | Revision |
|---|---|---|
| SO23-617-1-M1401 | Divider Plate Weld Joint Separation Root Cause Evaluation Report | 4 |
| SO23-617-1-C157 | Evaluation of Tube Vibration | 3 |
| SO23-617-1-C749 | Analytical Report of AVB Assembly | 4 |

| | | |
|---|---|---|
| SO23-617-1-M1265 | Summary Design Report | 8 |
| SO23-617-1-M1231 | Performance Analysis Report | 3 |
| SO23-617-1-C682 | Analytical Report of Separator and Dryer Assemblies | 7 |
| SO23-617-01R3 | Design Report of Tube | 5 |

MHI DOCUMENTS

| Number | Title | Revision/Date |
|---|---|---|
| UHQ-08N013 | MHI Survey Report of Sumitomo Metal Industries, Limited. Steel Tube Works | 0 |
| UHQ-11N010 | MHI Survey Report of Sumitomo Metal Industries, Limited. Steel Tube Works | 0 |
| UHQ-05N015 | MHI Survey Report of Sumitomo Metal Industries, Limited. Pipe & Tube Works | 1 |
| UHQ-08N014 | MHI Survey Report of Sumitomo Metal Industries, Limited. Steel Tube Works | 0 |
| UHQ-11S005 | MHI Survey Report of Sumitomo Metal Industries, Limited. Steel Tube Works | 0 |
| UHQ-05N019 | MHI Survey Report of Sumitomo Metal Industries, Limited. Steel Tube Works | 0 |
| BUH94-06 | Quality Assurance Survey/Audit Procedure of Vendors | 6 |
| BUH94-06 | Vendor Evaluation Procedure | 9 |
| BUH94-06 | Vendor Evaluation Procedure | 13 |
| 5ZDD94-06 | Vendor Evaluation Procedure | 1 |
| UHW-68-06A002 | MHI Evaluation on Corrective Action Established by Sumitomo Metal Industries Limited | 0 |
| UHNR-SON-RSG-06N005 | Nonconformance Report for Alloy 690 SG Tubing for SONGS Unit 2 | 4 |

| Number | Title | Revision/Date |
|---|---|---|
| UHQ-08N013 | MHI Survey Report of Sumitomo Metal Industries, Limited. Steel Tube Works | 0 |
| UHQ-07N004 | MHI Audit Report of Sumitomo Metal Industries, Limited. Steel Tube Woks | 1 |
| UHCP-70N004 | Corrective Action Plan Followup Report | 0 |
| UES-20100006 | Qualified Vendor List | 18 |
| L5-04GB004 | Submittal Document Control List | 53 |
| UGNR-SON2-RSG-020 | Nonconformance Report Channel head for Unit 2A | February 2, 2006 |
| UGNR-SON2-RSG-038 | Nonconformance Report Unacceptable local diameter change of tube holes | June 2, 2006 |
| UGNR-SON2-RSG-052 | Nonconformance Report Unacceptable length of 10 tube hole pitch of tube support plate #3 | September 11, 2006 |
| UGNR-SON2-RSG-062 | Nonconformance Report Incorrect end caps of AVB 2ASN154C and AVB 2ASN164C | December 1, 2006 |
| UGNR-SON2-RSG-075 | Nonconformance Report Unacceptable gaps between tubes and AVBs | March 24, 2007 |
| UGNR-SON2-RSG-091 | Nonconformance Report Incorrect machining for steam flow limiting device | September 4, 2007 |
| UGNR-SON2-RSG-096 | Nonconformance Report Unacceptable dimensions for steam flow limiting device of Unit 2A | October 23, 2007 |
| UGNR-SON3-RSG-009 | Nonconformance Report Unacceptable local diameter change of tube holes | May 10, 2007 |
| UGNR-SON3-RSG-024 | Nonconformance Report Some gaps between tubes and AVBs are larger than the criterion | November 30, 2007 |
| UGNR-SON3-RSG-049 | Nonconformance Report Out of tolerance on hand holes inside diameter | March 2, 2009 |
| UGNR-SON3-RSG-055 | Nonconformance Report Divider plate metal repair butter/weld crack after post bake | September 11, 2009 |
| UGNR-SON-RSG-06N002 | Nonconformance Report Feedwater nozzle for unit 2 ID: 21721-101 | February 2, 2006 |

| Number | Title | Revision/Date |
|---|---|---|
| UHQ-08N013 | MHI Survey Report of Sumitomo Metal Industries, Limited. Steel Tube Works | 0 |
| UGS-L5-050043 | Anti-Vibration Bar Inspection Procedure (Individual Bar) | 1 |
| UGS-L5-050045 | Inspection Procedure for Tube and Anti-Vibration Bar Inspection | 10 |
| B91U-N0001 | Mitsubishi Heavy Industries Ltd Kobe Shipyard & Machinery Works Quality Assurance Manual (Nuclear) | 39 |
| UES-69-040038 | Mitsubishi Heavy Industries Ltd Kobe Shipyard & Machinery Works Quality Assurance Program Manual (Project Addenda) | 15 |
| UHH-G06A97 | Stop Work Order for FMA (Final Mill Annealing) on Manufacturing of Heat Transfer Tubing for SONGS RSG | 0 |

MISCELLANEOUS DOCUMENTS

| Number | Title | Revision/Date |
|---|---|---|
| AR 060500134 | Action Request: Qualification Letter | |
| AR 040901345 | Action Request: Qualification Letter | |
| AR 050301458 | Action Request: Qualification Letter | |
| | Setpoint Transmittal Unit 2 and 3 Gas Monitors | December 6, 2010 |
| | SONGS Unit 3 Chemistry/Operations Logs – SG Event Timeline | January 31, 2012 |
| | Radiation Monitor 3RT-7870 Setpoints | May 31, 2011 |
| | Radiation Monitor 3RT-7818A Setpoints | May 31, 2011 |
| 2G-030-3 | Condenser Air Ejector Continuous Gas Post-Release Report | January 31, 2012 |
| SO23-617-01 | Specification for Design and Fabrication of RSGs for Unit 2 and Unit 3 | 4 |
| SO23-617-02 | Specification for Baseline Pre-Service Examination (PSE) on Tubing for Replacement Steam Generators | 1 |

| Number | Title | Revision/Date |
|---|---|---|
| | Updated Final Safety Analysis Report for San Onofre Units 2 and 3 | April 2009 |
| SO23-617-1-M29 | Design Review Item List | 9 |
| DA 2002-92 | Dominion Audit of Mitsubishi Heavy Industries | June 9, 2002 |
| V03-008 | Omaha Public Power District Audit of Mitsubishi Heavy Industries | July 18, 2003 |
| 99901030/2008-201 | Mitsubishi Heavy Industries (MHI), Kobe, Japan, inspection of selected portions of MHI's Quality Assurance (QA) program, and 10 CFR Part 21 program | July 18, 2008 |
| 99901384/2009-201 | Sumitomo Metal Industries, Limited, Higashi-Mukojima Amagasaki, Japan, inspection of selected portions of Sumitomo's quality assurance (QA) program and 10 CFR Part 21 program | November 13, 2009 |
| SMI-AQA-9041 | Reply to Notice of Nonconformance(99901 384/2009-201-01) | 0 |
| NRC Inspection Report 99901030/2008-201 | Inspection of Selected Portions of MHI's Quality Assurance and 10 CFR Part 21 Programs | July 18, 2008 |

MODIFICATIONS

| Number | Title | Date |
|---|---|---|
| Engineering Change Package NECP 800071702 | 50.59 Screening and Evaluation for Replacement Steam Generators – Unit 2 | July 31, 2009 |
| Engineering Change Package NECP 800071703 | 50.59 Screening and Evaluation for Replacement Steam Generators – Unit 3 | July 31, 2009 |

NUCLEAR NOTIFICATIONS

| | | | | |
|---|---|---|---|---|
| 201907899 | | | | |

PROCEDURES

| Number | Title | Revision |
|---|---|---|
| SO123-ODCM | Offsite Dose Calculation Manual | 0 |
| SO123-0-47 | Notification and Reporting of Significant Events | 18 |
| SO123-III-5.9 | Manual Effluent Gaseous Release Permits, Setpoint Calculations, and Monitor Calibration Constant Evaluations | 8 |
| SO123-VIII-1 | EPIP: Recognition and Classification of Emergencies | 36 |
| SD-SO23-310 | System Description - Turbine Building Sampling System | 9 |
| SD-SO23-690 | System Description – Steam Generator E088/089 | 18 |
| SD-SO23-690 | System Description – Steam Generator Radiation Monitors RE-6753 & RE-6759 | 18 |
| SD-SO23-690 | System Description – Condenser Air Ejector Wide Range Radiation Monitors RE-7870A/B & Low Range Radiation Monitors RE-7818 | 18 |
| SB-SO-FB-006 | Divider Plate Weld Joint Repair Procedure | 10 |
| SB-SO-HT-1001 | Post Weld Heat Treatment Procedure | 22 |
| SO123-XXXII-2.27 | Supplier Deviation Requests (SDRs) | 5 |
| SO23-617-1-D104 | Design Drawing - Component and Outline Drawing 2/3 | 2 |
| SO23-617-1-D1099 | General Shipment Arrangement SON-2A | 4 |
| SO23-617-1-M1246 | Hydrostatic Test Procedure | 3 |
| SO23-617-1-M139 | Post Weld Heat Treatment Procedure | 21 |

| | | |
|---|---|---|
| SO23-617-1-M1395 | Divider Plate Weld Joint Procedure | 9 |
| SO23-617-1-M1398 | Divider Plate Weld Joint Repair Plan | 12 |
| SO23-617-1-M1461 | Additional Post Weld Heat Treatment Procedure for Divider Plate Weld Joint Repair | 0 |
| SO23-617-1-M616 | Tubesheet Drilling Procedure | 9 |
| SO23-617-1-M733 | Helium Leak Test Procedure of the Tube to Tubesheet Welds (High Pressure) | 5 |
| SO23-617-1-M735 | Helium Leak Test Procedure of the Tube to Tubesheet Welds (Low Pressure) | 3 |
| SO23-617-1-M819 | AVB Structure Assembly Procedure | 8 |
| SO23-617-1-M820 | Tubing and AVB Installation Procedure | 6 |
| SO23-617-1-M821 | Anti-Vibration Bar Inspection Procedure (After Assembly) | 5 |
| SO123-XV-50 | Corrective Action Program | 25 |
| SO123-XII-18.19 | Nuclear Oversight Procedure Supplier Audits | 10 |
| SO123-XII-7.12 | Nuclear Oversight Procedure Source Verification | 5 |

VENDOR DOCUMENTS

| Number | Title | Revision/Date |
|---|---|---|
| 51-9176667-001 | Engineering Information Record, "SONGS 2C17 & 3C17 Steam Generator Degradation Assessment" | 1 |
| UGNR-SON2-RSG-012 | DI for Tube Support Plate Material | 1 |
| UGNR-SON2-RSG-014 | Discrepancy for tube thickness of TSP between Drawing and Purchase Specification | 0 |

| Number | Title | Revision/Date |
|---|---|---|
| UGNR-SON2-RSG-015 | Unacceptable Indications by MT for wrapper support of Unit 2 #A | 1 |
| UGNR-SON2-RSG-021 | Unacceptable Indications by MT for Anti rotation support of Unit 2 #A | 0 |
| UGNR-SON2-RSG-027 | Unacceptable MT indication for Anti-Rotation Supports | 0 |
| UGNR-SON2-RSG-054 | Unacceptable length of 10 tube hole pitch of tube support Plate # 6 | 1 |
| UGNR-SON2-RSG-058 | Insufficient clearance between the tubes in Row No. 28 and 30 in Column No. 22 | 3 |
| UGNR-SON2-RSG-059 | Insufficient clearance between the tubes in Row No 92 and 94 in Column No. 34 | 0 |
| UGNR-SON2-RSG-067 | Unacceptable Gaps between Tubes and AVBs | 7 |
| UGNR-SON2-RSG-075 | Unacceptable gaps between Tubes and AVBs | 1 |
| UGNR-SON2-RSG-091 | Incorrect Machining for Steam Flow Limiting Device | 0 |
| UGNR-SON2-RSG-103 | Damaged Locking Plates of Vane Jacking Device | 9 |
| UGNR-SON2-RSG-109 | As built dimension of #2A RSG | 1 |
| UGNR-SON2-RSG-112 | As built dimension of #2B RSG | 0 |
| UGNR-SON3-RSG-001 | Tubesheet | 0 |
| UGNR-SON3-RSG-018 | Unacceptable local diameter change of Tube holes | 2 |
| UGNR-SON3-RSG-024 | Some Gaps between Tubes and AVBs are larger than the criterion | 1 |
| UGNR-SON3-RSG-030 | Some gaps between tubes and AVBs are larger than the criterion | 0 |

| Number | Title | Revision/Date |
|---|---|---|
| UGNR-SON3-RSG-051 | Divider Plate Weld Crack | 16 |
| UGNR-SON3-RSG-052 | Divider Plate Weld Crack | 19 |
| UGNR-SON3-RSG-057 | Extension of Tubesheet PWHT Duration | 1 |
| UGNR-SON3-RSG-059 | Out of Tolerance dimensions on Primary Inlet/Outlet Nozzles and Support Skirt | 1 |
| UGNR-SON3-RSG-062 | Out of tolerance dimensions on Primary Inlet/Outlet Nozzles and Support Skirt (#B RSG) | 1 |
| UGNR-SON3-RSG-067 | UT indications in the Alloy 600/690 butter of Divider Plate Weld Groove | 0 |
| UGNR-SON3-RSG-074 | As built dimensions of #3A RSG (Overall Height) | 0 |
| UGNR-SON3-RSG-075 | As built dimension of #3A RSG | 1 |
| UGNR-SON3-RSG-076 | As built dimension of #3B RSG | 0 |
| UHNR-SON3-RSG-07N001 | Divider Plates for Unit 3 | 0 |
| Heat Treatment Record 40010SG-B-900D-R1-68 | Heat Treatment Chart for SG3 | April 4, 2012 |
| SO23-617-1-M149 | Purchase Specification for Heat Transfer Tubing | 4 |
| Fabrication Process Sheet 3901-SG-A-400E (Order 2563901/G101) | Rework of AVB Insertion for SONGS Unit 2 Replacement Steam Generator #A – Lower Portion | 1 |
| | | |

| Number | Title | Revision/Date |
|---|---|---|
| Fabrication Process Sheet 3901-SG-A-400D (Order 2563901/2300) | Helium Leak Test for SONGS Unit 2 Replacement Steam Generator #A – Lower Portion | 0 |
| TSN-5050 | Control Document Status list For Alloy 690 SG Tubing | 2 |
| TSN-5051 | Program of Preproduction Qualification (PPQ) For Alloy 690 SG Tubing | 3 |
| TSN-5053 | Melting Procedure for Alloy 690 SG Tubing | 0 |
| TSN-5054 | Identification and Traceability Procedure for Alloy 690 SG Tubing | 2 |
| TSN-5055 | Prohibited and Detrimental Material Control Procedure for Alloy 690 SG Tubing | 0 |
| TSN-5072 | Sampling Test Specimen Procedure for Alloy 690 SG Tubing | 2 |
| TSN-5073 | Chemical Analysis Procedure for Alloy 690 SG Tubing | 1 |
| TSN-5074 | Inclusion Test Procedure for Alloy 690 SG Tubing | June 4, 2005 |
| 005F-No.4316 | PPQ Test Results of Alloy 690 SG Tubing for San Onofre Nuclear Generating station Unit 2&3 | 2 |
| 4009-3ir01 | Moody International Ltd Inspection Report of Sumitomo Metal Industries | September 28, 2005 |

## SEQUENCE OF EVENTS

### San Onofre Nuclear Generating Station, Unit 2 and 3 Steam Generators

| Date | Event Description |
|---|---|
| November 2001 | Licensee forms a team to study the viability of replacing the steam generators |
| May 7, 2002 | Vendor benchmarking commences |
| July 2002 | Bechtel replacement study complete |
| November 7, 2003 | Replacement steam generator specification complete |
| December 12, 2003 | Replacement steam generator specification sent to procurement office |
| December 21, 2003 | Replacement steam generator request for proposal issued |
| February 17, 2004 | Bechtel installation study report completed |
| February 27, 2004 | Steam generator replacement request filed with California Public Utility Commission |
| February 27, 2004 | Replacement steam generator bids received by SCE |
| July 28, 2004 | Replacement steam generator vendor selected |
| August 2, 2004 | Replacement steam generator bid evaluation review board start |
| September 13, 2004 | Replacement steam generator bid evaluation completed |
| September 16, 2004 | SCE Board of Directors approval for Mitsubishi to design and manufacture steam generators |
| September 30, 2004 | Replacement steam generator contract signed |
| September 30, 2004 | Fabrication of Unit 2 and Unit 3 steam generators commences at Mitsubishi |
| November 2004 | SCE performs first full quality assurance audit of Mitsubishi |
| March 2, 2005 | Replacement steam generator installation specification sent to procurement office |
| March 17, 2005 | Mitsubishi/SCE anti-vibration bar design discussion |
| March 2005 | SCE performs follow-up surveillance audit of Mitsubishi |
| March 23, 2005 | SCE places conditional qualification on Mitsubishi |

| | |
|---|---|
| September 21, 2005 | Final environmental impact report released to public |
| October 2005 | SCE performs follow-up quality assurance audit of Mitsubishi |
| December 15, 2005 | California Public Utility Commission approval received |
| December 15, 2005 | Installation contract signed with Bechtel |
| February 2006 | SCE performs follow-up quality assurance audit of Mitsubishi |
| March 10, 2006 | Edison International Company Board of Directors approval of steam generator replacement project |
| April 22, 2006 | SONGS Unit 2 refueling outage completed |
| May 1, 2006 | Replacement steam generator transportation specification issued |
| May 10, 2006 | SCE removes conditional qualification from Mitsubishi |
| September 27, 2006 | Sumitomo Metal Industries issues a non-conformance report on some tubing for non-conformance to specifications associated with the final mill annealing process |
| September 27, 2006 | Mitsubishi issues stop work order to Sumitomo |
| September 28, 2006 | Mitsubishi issues corrective action request to Sumitomo based on the final mill annealing non-conformance report |
| September 29, 2006 | Mitsubishi visits Sumitomo to conduct root cause investigation |
| October 3, 2006 | Mitsubishi visits Sumitomo to confirm the adequacy of the corrective actions taken to address the root cause findings from the September 29, 2006 meeting |
| October 3, 2006 | Mitsubishi releases stop work order after confirming adequacy of Sumitomo's corrective actions |
| November 10, 2006 | Non-conformance report associated with final mill annealing process is closed |
| March 12, 2007 | Corrective action request associated with the final mill annealing non-conformance report closed |
| May 8, 2007 | Mitsubishi performs followup audit at Sumitomo and issues corrective action request for two findings in the audit |
| July 17, 2007 | Sumitomo submits corrective actions taken for the findings of the May 8, 2007 audit; Mitsubishi closes corrective action request. |
| September 13, 2006 | Mitsubishi/SCE technical meeting regarding anti-vibration bars |

| | |
|---|---|
| April 2008 | Fabrication of Unit 2 steam generators complete |
| April – June 2008 | Mitsubishi performs primary and secondary side hydrostatic pressure tests of Unit 2 steam generators |
| July 4, 2008 | AREVA performs baseline pre-service eddy current examinations on steam generator 2E0-89 at Mitsubishi facilities in Kobe, Japan |
| July 18, 2008 | AREVA performs baseline pre-service eddy current examinations on steam generator 2E0-88 at Mitsubishi facilities in Kobe, Japan |
| July 18, 2008 | NRC Inspection Report 99901030/2008-201 was issued. An inspection was completed at the Mitsubishi facility in Kobe, Japan. No violation or non-conformances were identified. |
| September and October 2008 | Final inspection for Unit 2 steam generators is completed. Primary and secondary sides filled with nitrogen. |
| December 16, 2008 | Unit 2 steam generators shipped from Kobe, Japan |
| February 14, 2009 | Unit 2 steam generators arrive at SONGS |
| Early March 2009 | Fabrication of Unit 3 steam generators complete |
| Middle March 2009 | Primary and secondary hydrostatic pressure tests conducted on Unit 3 steam generators |
| March 18, 2009 | Unit 3 divider plate weld failure discovered |
| March – July 2009 | Root cause evaluation of the divider plate-to-tubesheet weld conducted by Mitsubishi |
| March – June 2009 | Repair procedures developed for Unit 3 steam generators |
| June 2009 | Repair work on Unit 3 steam generators commences |
| July 2009 | AREVA performs final pre-service eddy current examinations on Unit 2 steam generators at SONGS |
| September 2009 – April 2010 | Unit 2 performs a refueling outage and installs the replacement steam generators |
| March 29, 2010 | Repair work to Unit 3 steam generator 3E0-89 complete |
| April 5, 2010 | Repair work to Unit 3 steam generator 3E0-88 complete |
| April 2010 | Unit 2 recommences power operations |
| April 18, 2010 | Unit 3 steam generator 3E0-89 passes primary side hydrostatic pressure retest |

| | |
|---|---|
| April 24, 2010 | Unit 3 steam generator 3E0-88 passes primary side hydrostatic pressure retest |
| June 2010 | AREVA performs baseline pre-service eddy current examinations on Unit 3 steam generators at Mitsubishi facilities in Kobe, Japan |
| August 2, 2010 | Unit 3 steam generators shipped |
| October 4, 2010 | Unit 3 steam generators arrive at SONGS |
| October 2010 – February 2011 | Unit 3 performs a refueling outage and installs the replacement steam generators |
| February 2011 | Unit 3 recommences power operations |
| January 10, 2012 | Unit 2 refueling outage start |
| January 31, 2012 | Unit 3 tube leak; rapid shutdown commences |
| February 2, 2012 | Unit 3 reaches cold shutdown conditions |
| February 12, 2012 | Unit 3 eddy current inspections commence on both steam generators |
| March 13, 2012 | In-situ pressure testing commences on tubes in steam generator 3E0-88 of Unit 3 |
| March 14, 2012 | In-situ pressure test failures on tubes located in Row 106 Column 78, Row 102 Column 78, and Row 104 Column 78 of steam generator 3E0-88 |
| March 15, 2012 | In-situ pressure test failures on tubes located in Row 100 Column 80, Row 107 Column 77, Row 101 Column 81, and Row 98 Column 80 of steam generator 3E0-88 |
| March 16, 2012 | In-situ pressure test failure on tube located in Row 99 Column 81 of steam generator 3E0-88 |
| March 16 – 21, 2012 | The 65 remaining tubes in steam generator 3E0-88 pass in-situ pressure testing |
| March 15 – 21, 2012 | The 56 identified tubes in steam generator 3E0-89 of Unit 3 are in-situ pressure tested and all tubes passed. |
| March 19 – 29, 2012 | NRC Augmented Inspection Team performs inspections at SONGS |
| March 23, 2012 | NRC received a letter from SCE outlining their commitments for corrective actions prior to restart of both Unit 2 and Unit 3 |
| March 27, 2012 | NRC issues a Confirmatory Action Letter to SCE |

| June 18, 2012 | NRC conducts public Augmented Inspection Team exit meeting near SONGS |
|---|---|

UNITED STATES
NUCLEAR REGULATORY COMMISSION
REGION IV
1600 EAST LAMAR BLVD
ARLINGTON, TEXAS 76011-4511

Mr. Peter Dietrich
Senior Vice President and
Chief Nuclear Officer
Southern California Edison Company
San Onofre Nuclear Generating Station
P.O. Box 128
San Clemente, CA 92674-0128

SUBJECT: SAN ONOFRE NUCLEAR GENERATING STATION – NRC AUGMENTED INSPECTION TEAM REPORT 05000362/2012007

Dear Mr. Dietrich:

The U. S. Nuclear Regulatory Commission (NRC) completed an inspection at your San Onofre Nuclear Generating Station (SONGS). The enclosed report documents the inspection results, which were discussed with you and other members of your staff during a public exit meeting on June 18, 2012.

Unit 3 had been operating for approximately one year following replacement of the steam generators when on January 31, 2012, control room operators received alarms, that indicated reactor coolant was leaking into steam generator 3E0-88. The leak was unexpected, and the control room operators responded in accordance with their procedures to perform a rapid shutdown, since the leak, although small, had increased enough in a short period of time to warrant the precautionary shutdown. The estimated leak rate was 75 gallons per day. The facility license allows full power operation with a steady leak rate of less than 150 gallons per day.

The first indication of the leak was from the main condenser air ejector radiation monitors reaching their alarm set point. The radiation monitors continuously sample from a vent stack for the purpose of rapidly identifying steam generator tube leaks. This was a direct release of radioactivity to the atmosphere, which is allowed by the facility license, up to limits in the regulations. The licensee reviewed the amount of gaseous radioactivity released and estimated a dose of approximately 0.0000452 mrem to a member of the public. The annual regulatory limit to a member of the public is 100 mrem per year. During a radiation protection inspection the week of February 13, 2012, the team reviewed the licensee dose estimates and did not identify any issues.

Unit 3 control room operators performed a controlled shutdown of Unit 3 on January 31, 2012, and reached cold shutdown conditions on February 2, 2012. The operators then prepared the steam generators for tube inspections, which were started on February 12, 2012. The first

inspection confirmed the location of the leak in steam generator 3E0-88. One tube was found with a small leak and no other tubes were leaking.

The licensee completed an extensive and expanded eddy current inspection of 100 percent of the steam generator tubes in both Unit 3 steam generators. Following pre-established testing requirements, the licensee identified 129 tubes in Unit 3 (56 tubes in steam generator 3E0-89 and 73 tubes in steam generator 3E0-88) that required in-situ pressure testing. This testing began on March 13, 2012, and was performed under ambient conditions.

Of the 129 tubes tested, a total of 8 tubes failed in-situ pressure testing, which included the original tube that was leaking. All of the failed tubes occurred in steam generator 3E0-88. Three of the tubes failed at or below a test pressure (3200 psi) equivalent to a design basis main steam line break differential pressure and temperature. The remaining five tubes failed near, but below the maximum differential test pressure of 5250 psig. This test pressure was equivalent to the minimum burst pressure capacity required by the plant technical specifications.

In accordance with Management Directive 8.3, "NRC Incident Investigation Program," deterministic and conditional risk criteria were used to evaluate the level of NRC response for this operational event. This event met three deterministic criteria (involved a major deficiency in design having potential generic safety implications; led to a significant loss of integrity of the primary coolant pressure boundary; and, involved an emergency or non-emergency event or situation, related to the health and safety of the public or on-site personnel or protection of the environment, for which a 10 CFR 50.72 report has been submitted that is expected to cause significant, heightened public or government concern) and the conditional large early release probability for the event was estimated to be in the overlap range for a special inspection/augmented inspection. Based on deterministic criteria being met and the risk assessment of this condition, Region IV, in consultation with the Office of Nuclear Reactor Regulation and Office of Nuclear Security and Incident Response, concluded that the NRC response should be an augmented team inspection.

This augmented inspection was chartered, in part, to identify the circumstances surrounding the tube degradation; review the licensee's actions following discovery of the conditions; evaluate the licensee's review of potential causes of the unusual steam generator tube wear; review the steam generator modeling; and, assess the differences between Unit 2 and Unit 3 steam generators.

Based on inspection, the team concluded that: (1) plant operators responded to the event in accordance with procedures in a manner that protected public health and safety; (2) safety systems were maintained and responded in accordance with the plant design; and (3) the loss of steam generator tube integrity was a serious safety issue that must be resolved. The purpose of this inspection was to gather facts and identify issues requiring followup, and, as such, no findings were identified. Ten items requiring additional followup are documented as unresolved items in the enclosed report.

In accordance with 10 CFR 2.390 of the NRC's "Rules of Practice," a copy of this letter, its enclosure, and your response (if any) will be available electronically for public inspection in the NRC Public Document Room or from the Publicly Available Records (PARS) component of the NRC's document system (ADAMS). ADAMS is accessible from the NRC Web site at http://www.nrc.gov/reading-rm/adams.html (the Public Electronic Reading Room).

Sincerely,

Elmo E. Collins
Regional Administrator

Docket No.: 05000362
License No: NPF-15

Enclosure: Inspection Report 05000362/2012-007
w/Attachment: Supplemental Information

cc w/ encl: Electronic Distribution

DISTRIBUTION:
Regional Administrator (Elmo.Collins@nrc.gov)
Deputy Regional Administrator (Art.Howell@nrc.gov)
DRP Director (Kriss.Kennedy@nrc.gov)
DRP Deputy Director (Allen.Howe@nrc.gov)
DRS Director (Tom.Blount@nrc.gov)
DRS Deputy Director (Patrick.Louden@nrc.gov)
Senior Resident Inspector (Greg.Warnick@nrc.gov)
Resident Inspector (John.Reynoso@nrc.gov)
SONGS Administrative Assistant (Heather.Hutchinson@nrc.gov)
Branch Chief, DRS/PSB2 (Greg.Werner@nrc.gov)
Branch Chief, DRP/D (Ryan.Lantz@nrc.gov)
Senior Project Engineer, DRP/D (Nick.Taylor@nrc.gov)
Project Engineer, DRP/D (David.You@nrc.gov)
Project Engineer, DRP/D (Brian.Parks@nrc.gov)
Public Affairs Officer (Victor.Dricks@nrc.gov)
Public Affairs Officer (Lara.Uselding@nrc.gov)
Branch Chief, DRS/TSB (Dale.Powers@nrc.gov)
RITS Coordinator (Marisa.Herrera@nrc.gov)
Regional Counsel (Karla.Fuller@nrc.gov)
Congressional Affairs Officer (Jenny.Weil@nrc.gov)
OEMail Resource
RIV/ETA: OEDO (Michael.McCoppin@nrc.gov)
DRS/TSB STA (Dale.Powers@nrc.gov)
RSLO (Bill.Maier@nrc.gov)
D/DIR, DORL (Louise.Lund@nrc.gov)
PM (Randy.Hall@nrc.gov)
D: NRR (Eric.Leeds@nrc.gov)
D: NSIR (Jim.Wiggins@nrc.gov)
D: NRO (Glen.Tracy@nrc.gov)
NRR/LPL4 (Michael.Markley@nrc.gov)
NRR/IOEB (Harold.Chernoff@nrc.gov)
EDO (Bill.Borchardt@nrc.gov)
DEDR (Michael.Johnson@nrc.gov)
DIR, DORL Michele.Evans@nrc.gov
DIR, DIRS Ho.Nieh@nrc.gov
D/DIR, DIRS John.Lubinski@nrc.gov

DOCUMENT NAME: S:DRS\REPORTS\SONGS 2012007 AIT-GEW ML12188A748

| | | | | | |
|---|---|---|---|---|---|
| SUNSI Rev Compl. | ☑Yes ☐ No | ADAMS | ☑Yes ☐ No | Reviewer Initials | GEW |
| Publicly Avail. | ☑Yes ☐ No | Sensitive | ☐Yes ☑ No | Sens. Type Initials | GEW |

| AIT Member/RIV | AIT Member/RII | AIT Member/NRO | AIT Member/NRR | AIT Member/NRR | AIT Member/RES |
|---|---|---|---|---|---|
| JReynoso | JRivera-Ortiz | JOrtega-Luciano | EMurphy | AJohnson | CThurston |
| e-mailed | e-mailed | e-mailed | | | e-mailed |
| 07/10/12 | 07/09/12 | 07/09/12 | | | 07/11/12 |
| AIT Team Leader/RIV | D:DRS | DRA | RA | | |
| GWerner | TBlount | AHowell | ECollins | | |
| *GEW* | | | | | |
| 07/11/12 | | | | | |

OFFICIAL RECORD COPY

## EXECUTIVE SUMMARY

On January 31, 2012, San Onofre Nuclear Generating Station (SONGS) Unit 3 control room operators received an alarm that indicated a primary-to-secondary reactor coolant leak from steam generator 3E0-88. Although the leak rate was small, it increased enough in a short period of time for the licensee to perform a rapid shutdown. The estimated leak rate was 75 gallons per day. The facility license allows full power operation with a steady state leak rate of less than 150 gallons per day. On February 2, 2012, Unit 3 reached cold shutdown conditions.

On February 12, 2012, Southern California Edison (SCE) commenced eddy current inspections of 100 percent of the tubes in both Unit 3 steam generators. During these inspections, the licensee discovered unexpected wear in both steam generators, including wear at retainer bars (similar to the wear found in Unit 2 steam generators) and significant tube-to-tube wear in the free-span areas. The inspections identified 56 tubes in steam generator 3E0-89 and 73 tubes in steam generator 3E0-88 that SCE performed in-situ pressure testing on to determine if they met the structural integrity requirements in plant technical specifications.

From March 13 – 21, 2012, AREVA conducted in-situ pressure testing of the suspect tubes in both steam generators. There were a total of eight tube failures during testing, all in steam generator 3E0-88. These tubes failed to satisfy the tube integrity performance criteria. At the time of the augmented team inspection, no stabilization or plugging of tubes had been performed in Unit 3 because the licensee was still conducting a cause evaluation of the failed tubes. There were two members of the Augmented Inspection Team on-site during the week of March 12 that observed portions of the in-situ pressure testing.

On March 23, 2012, NRC received a letter from SCE outlining their commitments for corrective actions prior to restart of both Unit 2 and Unit 3.

On March 27, 2012, the NRC issued a Confirmatory Action Letter to SCE, which outlined specific actions the licensee must complete before restarting Units 2 and 3 that included identifying the cause of the tube wear; taking corrective actions to prevent loss of tube integrity; and performing a mid-cycle outage to perform tube inspections.

From March 19 – 29, 2012, the NRC Augmented Inspection Team performed on-site inspections at SONGS. After the on-site portion was completed, the team continued to review various documents and attended a number of expert panels associated with the cause evaluations, thermal/hydraulic modeling, and Unit 2 operational assessment. The team identified ten unresolved items that warranted additional follow-up: (1) adequacy of the post trip/transient procedure; (2) evaluation and disposition of the Unit 3 loose parts monitor alarms; (3) design of retainer bar; (4) control of original design dimensions; (5) evaluation of and controls for divider plate repair; (6) atmospheric controls of Unit 3 steam generators during shipment; (7) no tube bundle support used during shipping; (8) evaluation and disposition of accelerometers; (9) adequacy of Mitsubishi's thermal-hydraulic model; and (10) change of methodologies associated with 10 CFR 50.59 review.

The team determined: (1) plant operators responded to the event in accordance with procedures in a manner that protected public health and safety; (2) equipment responded in accordance with the plant design; and (3) the cause evaluations for the tube wear were appropriate.

At the time of the leak on Unit 3 steam generator 3E0-88, Unit 2 had completed eddy current testing of all the tubes in both steam generators as part of their first refueling outage subsequent to the steam generators being replaced in 2009. The eddy current testing did identify significant tube wear around the upper retainer bar, with one tube requiring in-situ pressure testing. Wear indications were found at anti-vibration bar supports, tube support plates and at a foreign object (that was removed). Southern California Edison did determine the cause of tube wear in Unit 2 to be from vibration of the tubes against the retainer and anti-vibration bars. Initially, no tube-to-tube wear was identified. Because of the extensive tube-to-tube wear identified on Unit 3, SCE conducted additional eddy current testing on 1375 tubes on each Unit 2 steam generator. This testing was completed using a more sensitive probe in the same area where tube-to-tube wear was identified on Unit 3. The licensee identified that two tubes in Unit 2 exhibited tube-to-tube wear similar to the wear identified in Unit 3 steam generators. Initially, these findings resulted in a total of 94 plugged tubes, with 15 tubes stabilized in steam generator 2E0-89. For steam generator 2E0-88 this initially resulted in 98 plugged tubes, with 18 tubes stabilized. Additional plugging and stabilizing was completed for Unit 2 steam generators to address the causes of tube-to-tube wear identified. The corrective actions taken to address the causes of the tube-to-tube wear will be inspected as part of the Confirmatory Action Letter and documented in Inspection Report 05000361, 362/2012009.

Overall, the team concluded that SCE was pursuing the causes of the unexpected steam generator tube-to-tube degradation. In an effort to identify the causes, SCE brought in a large number of outside industry experts, consultants, and steam generator manufacturers, including Westinghouse and AREVA to perform thermal-hydraulic and flow induced vibration modeling and analysis. Southern California Edison identified the most probable causes of the tube-to-tube wear as a combination of higher than predicted thermal/hydraulic conditions and insufficient tube-to-anti-vibration bar contact forces. In addition, SCE concluded that the differences in manufacturing/fabrication could contribute to the tube-to-tube wear seen in the Unit 3 steam generators.

The NRC team independently concluded that the cause of the fluid-elastic instability vibration was primarily the higher than predicted thermal-hydraulic conditions, along with insufficient contact forces (loss of anti-vibration bar contribution to damping) in the upper tube bundle. The team believes that the differences in severity of the tube-to-tube wear between Unit 2 and Unit 3 may be related to the improved manufacturing/fabrication of the tubes and other components which may have resulted in increased clearance between the anti-vibration bars and the tubes. Additional inspection will be required to review and closeout the unresolved items.

TABLE OF CONTENTS


EXECUTIVE SUMMARY ..... - 1 -

SUMMARY OF FINDINGS ..... - 2-

1.0 Description of Event (Charter Item 1) ..... - 4 -

1.1 Sequence of Events ..... - 4 -

1.2 System Descriptions ..... - 7 -

1.3 Resident Inspectors' Assessment of Steam Generator Tube Leak Event Response ..... - 8 -

1.4 Description of Steam Generator Inspections at SONGS Unit 2 ..... - 11 -

1.5 Description of Steam Generator Inspections at SONGS Unit 3 ..... - 13 -

1.6 In-Situ Pressure Testing ..... - 15 -

2.0 Probable Cause Evaluation (Charter Item 2) ..... - 17 -

2.1 SCE Cause Evaluation ..... - 18 -

2.2 Mitsubishi Cause Evaluation ..... - 19 -

3.0 Operational Differences in Configuration and Operation Between Unit 2 and 3 (Charter item 3) ..... - 22 -

4.0 Design and Manufacturing Differences (Charter Item #4) (Mitsubishi Heavy Industries Charter Item 1) ..... - 24 -

5.0 Quality Assurance/Quality Control (Charter Item 5) (Mitsubishi Charter Item 4) ..... - 38 -

5.1 SONGS Quality Assurance/Quality Control ..... - 38 -

5.2 Mitsubishi Heavy Industries Quality Assurance/Quality Control ..... - 40 -

5.3 Quality Assurance Conclusion ..... - 42 -

6.0 Implementation of Steam Generator Industry Information (Charter Item 6) (Mitsubishi Heavy Industries Charter Item 3) ..... - 42 -

7.0 Packing, Shipping, Handling, and Receipt Inspection (Charter Item 7) ..... - 45 -

8.0 Thermal-hydraulic and Flow Induced Vibration Modeling (Charter Item 8) ..... - 45 -

9.0 Risk Assessment (Charter Item 9) ..... - 58 -

10.0 Assess Quality Assurance, Radiological Controls, and Safety Culture Components (Charter Item 10) - 58 -

11.0 Operational Impacts from Unit 3 to Unit 2 (Charter Item 11) ..... - 59 -

12.0 Divider Plate Manufacturing and Weld Issues (Mitsubishi Heavy Industries Charter Item 2) ..... - 60 -

13.0 Office of Nuclear Reactor Regulation Review of SONGS 50.59 Evaluation ..... - 64 -

14.0 Exit Meeting Summary ..... - 66 -

ATTACHMENT 1: SUPPLEMENTAL INFORMATION ..... A1-1

ATTACHMENT 2: SEQUENCE OF EVENTS ..... A2-1


**U.S. NUCLEAR REGULATORY COMMISSION**
**REGION IV**

| | |
|---|---|
| Docket: | 05000362 |
| License: | NPF-15 |
| Report: | 05000362/2012007 |
| Licensee: | Southern California Edison Company |
| Facility: | San Onofre Nuclear Generating Station |
| Location: | 5000 S. Pacific Coast Hwy<br>San Clemente, California |
| Dates: | March 15 through June 18, 2012 |
| Team Leader: | G. Werner, RIV/Branch Chief/Plant Support Branch 2 |
| Inspectors: | A. Johnson, NRR/Materials Engineer<br>E. Murphy, NRR/Senior Materials Engineer<br>J. Ortega-Luciano, NRO/Reactor Operations Engineer<br>J. Reynoso, RIV/Resident Inspector<br>J. Rivera-Ortiz, RII/Senior Reactor Inspector<br>C. Thurston, RES/Reactor Systems Engineer |
| Approved By: | Elmo E. Collins, Regional Administrator |

## SUMMARY OF FINDINGS

IR 05000362/2012007, 03/15/2012 through 06/18/2012, San Onofre Nuclear Generating Station; Augmented Inspection Team.

An Augmented Inspection Team was approved on March 16, 2012. Two inspectors on the team were onsite observing in-situ pressure testing the week of March 12. The remaining inspectors were dispatched to the site on March 19, 2012, to assess the facts and circumstances surrounding the tube leak and unexpected wear of tubes in Unit 3 steam generators. The Augmented Inspection Team was established in accordance with NRC Management Directive 8.3, "NRC Incident Investigation Program," and implemented using Inspection Procedure 93800, "Augmented Inspection Team." The inspection was conducted by a team of inspectors from the NRC's Region IV and Region II offices, the resident inspector from San Onofre Nuclear Generating Station, one engineer from the NRC Office of New Reactors, two engineers from the NRC Office of Nuclear Reactor Regulation, and one engineer from the NRC Office of Research. The team identified 10 issues that will require additional NRC inspection. These issues are tracked as unresolved items in this report.

A. NRC-Identified and Self-Revealing Findings

None

B. Licensee-Identified Violations

None

## 1.0 Description of Event (Charter Item 1)

### 1.1 Sequence of Events

In November 2001, SCE formed a team to study the viability of replacing the Unit 2 and Unit 3 original steam generators. The licensee performed an assessment of six steam generator vendors, which included vendor benchmarking, development of the replacement steam generator design specifications, a steam generator request for proposal, and a steam generator bid evaluation. In September 2004, the licensee selected Mitsubishi Heavy Industries (Mitsubishi) as the manufacturer of the replacement steam generator.

A general description and comparison of the Unit 2 and Unit 3 steam generators is included in Section 1.2 of this report.

In September 2004, Mitsubishi commenced fabrication of Unit 2 steam generators 2E0-89 and 2E0-88, and completed fabrication in April 2008.

At the time of the contract signing in September 2004, Mitsubishi had a quality assurance program in place that had been approved by the licensee, by taking credit for other utilities' reviews of Mitsubishi's quality assurance program. The licensee informed Mitsubishi that once enough fabrication was underway to support an evaluation, the licensee would perform an audit to confirm that their quality assurance program was operating properly.

In November 2004, the licensee performed an audit of the Mitsubishi quality assurance program at their facilities in Kobe, Japan, and then followed up with a surveillance inspection in March 2005. As a result of these two activities, the licensee informed Mitsubishi that additional oversight of Mitsubishi's design control activities was required. The licensee informed Mitsubishi that the additional oversight conditions would remain in place until such time that Mitsubishi had demonstrated improved design control performance, which would be verified by the licensee. After implementing the extra quality control steps, Mitsubishi submitted a letter to SCE stating that they were ready for the conditional qualification to be lifted. The licensee performed followup audits of Mitsubishi in October 2005 and February 2006, but still found enough instances of design control issues that the additional oversight requirements of the conditional qualification were not lifted. In May 2006, SCE was able to verify that Mitsubishi had demonstrated improved design control performance and therefore removed the conditional qualification of Mitsubishi.

After fabrication of the Unit 2 steam generators was complete in April 2008, Mitsubishi performed hydrostatic pressure tests of the primary and secondary sides of the Unit 2 steam generators. In July 2008, after completion of the hydrostatic pressure tests, AREVA performed the baseline eddy current pre-service examinations of the Unit 2 steam generators at the Mitsubishi facilities in Japan. The final inspections for the Unit 2 steam generators were completed in September and October 2008, followed by filling the primary and secondary sides of the Unit 2 steam generators with nitrogen. The Unit 2 steam generators were shipped from the Mitsubishi facilities in December 2008 and received on site at SONGS in February 2009. In July 2009, AREVA performed the

final eddy current pre-service examination on the Unit 2 steam generators at SONGS. The baseline and final eddy current pre-service examinations were performed in Japan and at SONGS, respectively, to assess whether any changes to the steam generator tubing had resulted from shipping, and no changes were identified.

The Unit 2 steam generators were installed during a refueling outage, between September 2009 and April 2010. On April 13, 2010, Unit 2 returned to power operations. NRC engineering inspectors performed inspections in accordance with Inspection Procedure 50001, "Steam Generator Replacement Inspection," and Inspection Procedure 71111.17, "Evaluations of Changes, Tests, or Experiments and Permanent Plant Modifications." This included a review of selected portions of modifications associated with the replacement steam generators to determine if the changes were done in accordance with 10 CFR 50.59. The results of the inspection of the replacement steam generators for Unit 2 are documented in NRC Inspection Report 05000361/2009007.

The fabrication of the Unit 3 steam generators 3E0-89 and 3E0-88 was completed between September 2004 and April 2010. The design specifications of the Unit 2 and Unit 3 steam generators were the same when the contract between the licensee and Mitsubishi was signed; however, due to a fabrication issue, there was a modification to the divider plate-to-channel head weld requirements for the Unit 3 steam generators, and to the classification of the Unit 3 tubesheet material. The specifics of these modifications are discussed further in Section 1.2.a of this report.

In March 2009, after initial fabrication of the Unit 3 steam generators was complete, Mitsubishi performed hydrostatic pressure tests of the primary and secondary sides of the Unit 3 steam generators. After completion of the hydrostatic pressure tests, a visual inspection of the steam generator reactor coolant side revealed cracks in the welds that join the divider plate to the channel head of both steam generators.

From March through July of 2009, Mitsubishi performed a root cause evaluation, which showed that a change in the weld preparation process for the divider plate-to-channel head weld had resulted in the cracking of the weld. A repair procedure was developed and repair work on the Unit 3 steam generators began in June 2009. The repairs to the Unit 3 steam generators were completed in late March (3E0-89) and early April (3E0-88) of 2010. In late April 2010, the Unit 3 steam generators passed the primary hydrostatic pressure re-tests. In June 2010, AREVA performed a final eddy current pre-service examination of the steam generators at the Mitsubishi facilities in Japan, and this was used as the baseline pre-service examination for the Unit 3 steam generators. The steam generators were shipped from the Mitsubishi facilities in Japan in early August 2010, and arrived at SONGS in early October 2010.

The Unit 3 steam generators were installed during a refueling outage, between October 2010 and February 2011. On February 18, 2011, Unit 3 returned to power operations. NRC engineering inspectors performed inspections in accordance with Inspection Procedure 50001, "Steam Generator Replacement Inspection," and Inspection Procedure 71111.17, "Evaluations of Changes, Tests, or Experiments and Permanent Plant Modifications." This included a review of selected portions of modifications associated with the replacement steam generators to determine if the changes were

done in accordance with 10 CFR 50.59. The results of the inspection of the replacement steam generators for Unit 3 are documented in NRC Inspection Report 05000362/2010009.

Unit 2 was shut down for a scheduled refueling outage on January 10, 2012. Steam generator tubing inspections in steam generator 2E0-89 found unexpected wear caused by retainer bars on two tubes that required plugging in accordance with the technical specifications. Steam generator tubing inspections in steam generator 2E0-88 found wear on four tubes that required plugging in accordance with the technical specifications. Anti-vibration bars caused the wear on two of the tubes and retainer bars caused the wear on the other two tubes. Because of the unexpected wear, the licensee preventatively plugged 94 tubes in steam generator 2E0-89 and 98 tubes in steam generator 2E0-88. Fifteen of the tubes in steam generator 2E0-89 were stabilized prior to plugging, and 18 of the tubes in steam generator 2E0-88 were stabilized prior to plugging. Additional details of the inspections of the Unit 2 steam generators are provided in section 1.4 of this report

On January 31, 2012, Unit 3 control room operators received an alarm that indicated a primary-to-secondary reactor coolant leak from steam generator 3E0-88. The alarm received was from the main condenser air ejector radiation monitors, which continuously samples from a vent line for the purpose of rapidly identifying steam generator tube leaks. Although the leak rate was small, it increased enough in a short period of time for the licensee to perform a rapid shutdown. The estimated leak rate was 75 gallons per day. The facility license allows full power operation with a steady state leak rate of less than 150 gallons per day. On February 2, 2012, Unit 3 reached cold shutdown conditions. The licensee reviewed the amount of gaseous radioactivity released and estimated a dose of approximately 0.0000452 mrem to a member of the public. The annual regulatory limit to a member of the public is 100 mrem per year. This unplanned offsite release of radioactivity was reviewed by Region IV health physicist inspectors who confirmed SONGS' offsite dose estimate (see Section 10 for additional details).

After shutdown, the licensee started preparations for performing inspections of Unit 3 steam generators 3E0-89 and 3E0-88. The steam generator tube inspections commenced on February 12, 2012, and confirmed the location of the leak in steam generator 3E0-88 as coming from the tube in Row 106 Column 78. No other tubes were found to be leaking. The licensee then performed eddy current inspections of 100 percent of the tubes in both Unit 3 steam generators. During these inspections, the licensee discovered unexpected wear in both steam generators, including wear at retainer bars (similar to the wear found in Unit 2 steam generators) and significant tube-to-tube wear in the freespan areas (u-bend area of the tubes). The inspections identified 56 tubes in steam generator 3E0-89 and 73 tubes in steam generator 3E0-88 that SCE performed in-situ pressure testing on to determine if they met the structural integrity requirements in plant technical specifications. Additional details of the inspections of the Unit 3 steam generators are provided in section 1.5 of this report

From March 13 – 21, 2012, AREVA conducted in-situ pressure testing of the suspect tubes in both steam generators. There were a total of eight tube failures during testing, all in steam generator 3E0-88. These tubes failed to satisfy the tube integrity performance criteria in the technical specifications. Additional details of the in-situ

pressure tests are provided in Section 1.6 of this report.

From March 19 – 29, 2012, the NRC augmented inspection team performed inspections onsite at SONGS.

On March 27, 2012, the NRC issued a Confirmatory Action Letter to SCE, which outlined specific actions for each unit that the licensee must complete before restarting Unit 2 and Unit 3.

A more detailed sequence of events can be found in Attachment 2.

1.2 System Descriptions

a. Replacement Steam Generators

The Unit 2 and Unit 3 replacement steam generators contain thermally treated Alloy 690 tubing in a u-bend configuration, with a nominal outside diameter of 0.750 inches and a nominal wall thickness of 0.043 inches. There are 9727 tubes within each steam generator, which are arranged in 142 rows and 177 columns. The rows and columns are arranged in a nominal 1.000 inch triangular pitch (results in approximately 0.25 inches of clearance between tubes). The first thirteen rows of tubes were thermally stress relieved after bending to reduce susceptibility to stress corrosion cracking. The tubes were hydraulically expanded to the full depth of the tubesheet, which has a nominal thickness of 28.19 inches. Seven tube support plates made of Type 405 stainless steel provide lateral support to the tubes. The tube support plates contain broached trefoil holes with chamfered lands. Support of the tubes in the upper bundle is provided by six sets of Type 405 stainless steel, V-shaped, anti-vibration bars.

The original Model 3410 steam generators at Unit 2 and Unit 3 were manufactured by Combustion Engineering. Each steam generator had 9,350 mill-annealed, Alloy 600 tubes, which were a combination of u-bend tubes and tubes with two 90 degree bends (also called square bends). The tubes had a nominal outside diameter of 0.750 inches, and a nominal wall thickness of 0.048 inches. The tubes were expanded through the full depth of the tubesheet using an explosive process, and lateral support was provided by a number of lattice-grid (i.e., eggcrate) carbon steel tube supports. Tube support in the upper bundle was provided by carbon steel diagonal bars (commonly called batwings) and vertical straps. The original steam generators contained a cylindrically shaped support structure beneath the center of the tubesheet (called the stay cylinder) that provided structural support to the large diameter tubesheet.

Southern California Edison reviewed Information Notices, Generic Letters, Bulletins, and industry operational experience associated with steam generator issues when developing the design specifications for the replacement steam generators. Some of the changes are summarized below, for additional information see Section 6 of this report.

The design changes between the original and replacement steam generators noted above are commonly used in replacement steam generators today. The thermally treated Alloy 690 tubing provides increased resistance to stress corrosion cracking as compared to thermally treated Alloy 600 tubing. The use of type 405 stainless steel (in

lieu of carbon steel) for tube support plates eliminates the denting phenomenon associated with drilled carbon steel support plates. The use of broached trefoil holes (instead of drilled holes) in tube support plates reduces the number of contact points with tubes and increases flow area between the tube and tube support plate, thereby reducing the potential for corrosion products to buildup between the tube and the tube support plate. Combustion Engineering steam generators with the batwing design have typically suffered from wear on tubes (from the batwings) in the central stay cylinder region, due to higher cross flow velocities in this portion of the steam generators. In an effort to eliminate this high flow region, the replacement steam generators were designed with a thicker tubesheet that was inherently more rigid, and thus did not require the central stay cylinder. By choosing a design with all u-bend tubes, the bat wing design was eliminated and a new anti-vibration bar assembly was used. The new anti-vibration bar assembly is a free floating design that is supported by the tube bundle and is not attached to the tube bundle wrapper.

b. Channel Head-to-Divider Plate Weld

On March 18, 2009, after completion of the primary and secondary side hydrostatic pressure tests, a crack in the weld between the divider plate and the channel head on Unit 3 steam generator 3E0-88 was identified . Examination showed that the dissimilar metal weld, between the Alloy 690 divider plate and the low alloy steel channel head, had separated. Specifically, the failure occurred between the channel head and the Alloy 152 butter weld, which is the weld filler wire equivalent of Alloy 690. Upon examination, a similar weld failure was found in steam generator 3E0-89 although the size of the failure was not as large.

Mitsubishi performed a root cause evaluation and found that air carbon-arc gouging was used to remove the stainless steel cladding from the channel head, in preparation for making the divider plate-to-channel head dissimilar metal weld. The air carbon-arc gouging had resulted in carbon deposits in the channel head that were not completely removed by grinding that was performed after the gouging operation. The high carbon area increased the hardness of the channel head (due to carburization) and was the most probable cause of the failure between the channel head and the Alloy 152 butter weld. Mitsubishi also found that it was possible, but less probable, that the increased hardness of the channel head promoted hydrogen induced cracking in areas of the divider plate-to-channel head weld that had higher local stresses due to geometric configurations (i.e., at the corner of the divider plate).

1.3 Resident Inspectors' Assessment of Steam Generator Tube Leak Event Response

a. Inspection Scope

On January 31, 2012, the resident inspectors were on-site during the Unit 3 steam generator tube leak event. The resident inspectors observed the licensee's response to the steam generator tube leak from the control room; and observed the rapid shutdown, actions to cool the plant down, actions performed during recovery of plant systems, and other operator actions. Additionally, the resident inspectors conducted a review of control room activities and equipment response to determine if the operating crew responded appropriately and if the plant systems responded as expected during the

event. The resident inspectors conducted interviews with various on-shift personnel and reviewed the post trip report, which included control room logs, operator statements, and plant data trends to assess overall performance of the crew. The review also included procedure use and adequacy of the guidance used for event response, placing the plant in a safe and stable condition, establishing appropriate parameter limits for plant cooldown, and conducting the cooldown to cold shutdown conditions. With respect to operator awareness and decision making, the resident inspectors were specifically focused on the effectiveness of control board monitoring, technical decision making, and work practices of the operating crew. With respect to command and control, the resident inspectors focused on actions taken by the control room supervision in managing the operating crew's response to the event.

b. Observations and Findings

No findings were identified.

The team identified one unresolved item for which additional information is required to determine if performance deficiencies exist or if the issue constitutes a violation of NRC requirements.

On January 31, 2012, at 3:05 p.m. (PST), main control room operators at Unit 3 received a secondary plant system radiation alarm associated with the air ejectors followed by a blowdown radiation monitor alarm. Operations personnel responded in accordance with Abnormal Operating Instruction SO23-13-14, "Reactor Coolant Leak," Revision 16, since the entry conditions for a steam generator tube leak were satisfied. Operations personnel determined the leakage to be about 75 gallons per day, using a mass balance calculation (.06 gpm), from steam generator 3E0-88. This leak rate was below the Technical Specification 3.4.13, "RCS Operational Leakage," limit of 150 gallons per day for primary- to-secondary leakage through any one steam generator.

At 4:10 p.m., operations personnel evaluated that the primary-to-secondary leak rate exceeded 75 gallons per day on steam generator 3E0-88 and that the leak was increasing at greater than 30 gallons per day per hour, and consequently, initiated a rapid power reduction to be ≤ 50 percent power in one hour and in Mode 3 within the next two hours per Abnormal Operating Instruction SO23-13-14. In accordance with Abnormal Operating Instruction SO23-13-14, when reactor power was less than 35 percent, operations personnel tripped the reactor at 5:31 p.m. to enter Mode 3.

Due to the manual reactor trip, operations personnel entered Emergency Operating Instruction SO23-12-1, "Standard Post Trip Actions," Revision 26, to ensure the plant was placed in a stable, safe condition, and that the plant was configured to respond to the continuing steam generator tube leak event. Operations personnel implemented the emergency operating instructions and isolated the affected steam generator at 6:00 p.m. A plant cooldown was conducted by using main steam bypass from steam generator 3E0-89 to the main condenser. Mode 4 conditions were achieved at approximately 6 hours after isolation of the steam generator. Cooldown continued until Unit 3 was in Mode 5, cold shutdown.

(1) Introduction: The team identified an unresolved item associated with Operations Procedure SO123-0-A8, "Trip/Transient and Event Review," that required a formal review of operator actions and safety systems to determine if important systems responded as design. The formal review was not completed.

Description: On March 19, 2012, the team requested to review the results of operations post trip/transient evaluation of the January 31, Unit 3 tube leak event. Operations Procedure SO123-0-A8, "Trip/Transient and Event Review," Revision 8, required a detailed post trip review following unplanned reactor trips. However, a formal trip/transient and event review was not available because operations personnel determined the Unit 3 event was planned and therefore a formal review was not required.

On March 27, 2012, Team met with operations personnel to discuss items on a draft Unit 3 trip/transient evaluation provided to the team. The team also discussed with operations personnel the requirements in Operations Procedure SO123-0-A8, and concluded a basis for what was "planned" and "unplanned" was not defined. Operations personnel determined the Unit 3 reactor trip was a planned reactor trip because Abnormal Operating Instruction SO23-13-14, "Reactor Coolant Leak," Revision 16, Section 4, had described actions for primary-to-secondary leakage. Specifically, this section stated, in part, under plant conditions of increasing steam generator tube leakage, operations personnel were required to perform a rapid power reduction to less than 35 percent power, then trip the reactor.

The team discussed with operations personnel that definitions for unplanned events have been established through industry standards to report on plant performance. These standards include NEI 99-02, "Regulatory Assessment Performance Indicator Guideline," Revision 6. Industry Guidance NEI 99-02 indicated that Unit 3 reactor trip should be considered unplanned since the reactor trip was required by an abnormal operating instruction and would count against the performance indicator for unplanned reactor trips. NRC Regulatory Issue Summary (RIS) 2000-08, "Voluntary Submission of Performance Indicator Data," Revision 1, allows industry to use NEI 99-02 to report performance indicator data.

Additional review and follow up will be required to review the corrective actions associated with the procedural guidance for an event review and then determine whether this issue represents a performance deficiency or constitutes a violation of NRC requirements. This issue is identified as URI 05000362/2012007-01, "Adequacy of the Trip/Transient and Event Review Procedure."

c. Conclusions

The resident inspectors concluded that abnormal and emergency operating instructions were performed consistent with expected standard and that operations personnel exhibited the fundamental operator competencies in response to the Unit 3 steam generator tube leak.

Specifically, the resident inspectors determined that the operating crew displayed a questioning attitude of changing plant parameters and took conservative actions. The operating crew identified important preliminary increasing trends of Unit 3 air ejectors radiation monitors and subsequent alarms in a timely manner for a tube leak in steam generator 3E0-88. Additionally, the resident inspectors determined that crew supervision exercised effective oversight of plant status, crew performance, and control room command and control.

The team identified one unresolved item associated with the adequacy of the trip/transient procedure.

1.4 Description of Steam Generator Inspections at SONGS Unit 2

On January 10, 2012, SONGS Unit 2 was shutdown for a refueling outage. Southern California Edison personnel conducted a scheduled steam generator inspection in accordance with Technical Specification 5.5.2.11, "Steam Generator (SG) Program." This was the first inspection of the Unit 2 steam generators since their replacement in January 2010. The accumulated operating time on the replacement Unit 2 steam generators was 1.7 effective full power years. There was no reported primary-to-secondary leakage at the time of shutdown.

The scope of the inspection included a 100 percent tube sample with an eddy current test bobbin probe over the full tube length, followup rotating coil inspections at special interest locations, and a secondary side foreign object search and retrieval. Three types of flaw indications were found in the tubes:

- Wear at the tube support plate and anti-vibration bar supports
- Wear caused by a loose part
- Wear at retainer bars

With the exception of the wear indications found at tube retainer bar locations, the wear indications found are similar to those found at other replacement steam generators after one cycle of operation. A total of 2411 tubes were found with indications at the tube support plates and anti-vibration bar supports, the vast majority of which had a measured depth of less than 20 percent of the tube wall thickness. Only two of these indications, located at the anti-vibration bar supports, exceeded the Technical Specification 5.5.2.11.c repair limit of 35 percent of the tube wall thickness. The two affected tubes plus two additional tubes with 31 percent deep indications were stabilized and plugged.

Southern California Edison performed a reanalysis of the bobbin probe eddy current data collected during the Unit 2 inspection program. This reanalysis was performed after the finding of the long free-span indications in Unit 3, allowing insights gained during the Unit 3 inspections to be applied to the Unit 2 data. The scope of this reanalysis was a "box" of 1000 tubes in each Unit 2 steam generator which bounded the region of tubing affected by the instability damage in Unit 3. This reanalysis confirmed the results of the original analysis and did not identify any tube-to-tube wear.

Two tubes were found with indications (less than 35 percent through wall) caused by a small loose part on the secondary side. This loose part was removed from the steam generator. Metallurgical analysis indicated the loose part was a piece of weld metal, most likely introduced during steam generator manufacturing operations. The two affected tubes were left in service.

Six tubes were found with indications at retainer bar intersections. The retainer bars are part of the support structure for the anti-vibration bars and are a unique feature of steam generators manufactured by Mitsubishi. The measured indication depths ranged from 28 to 90 percent of the tube wall thickness. Because of the short measured lengths of these flaws, only the 90 percent indication was in-situ pressure tested as part of condition monitoring. The affected tube was successfully pressurized to 5300 psi with no leakage, confirming that the Technical Specification 5.5.2.11.b.1 structural integrity performance criteria were met. Mitsubishi attributed the cause of these indications to retainer bar vibration, the potential for which had not been evaluated during design (see Section 4 of this report for additional details). Fort Calhoun is the only other domestic plant with Mitsubishi steam generators. The retainer bars at Fort Calhoun are significantly stiffer than at SONGS.

The six tubes with retainer bar indications have been plugged and stabilized. In addition, the remaining 182 tubes (total for both Unit 2 steam generators) that intersect the retainer bars were plugged as a preventive measure. Twenty four of these tubes were stabilized prior to plugging to ensure that all 188 plugged tubes will not sever due to continued vibration of the retainer bar. The tubes that were stabilized are strategically located at each end and center of the retainer bars.

Detailed plans for returning Unit 2 to service are still under development. Short-term plans relating to Unit 2 included conducting a full u-bend examination of 1375 tubes in both steam generators using a rotating coil. The tube sample was intended to bound the region affected by free-span wear seen in Unit 3 by significant margin. The rotating coil provides a slightly more sensitive inspection for long free-span wear scars than the bobbin probe. These inspections were performed subsequent to the team's site visit and identified two tubes in Unit 2 steam generator 2E0-89 with shallow free-span wear in the u-bend region. These indications both measured approximately 14 percent deep, and were located in the same region of the bundle affected by free-span indications in the Unit 3 steam generators.

The tube wear data for Unit 2 is shown below.

**SONGS Unit 2 Steam Generators**

**Wear Depths Summary**

| Steam Generator SG2E88 (Through-Wall Wear) | Anti-Vibration Bar | Tube Support Plate | U-Bend Freespan | Retainer Bar | Foreign Object | Total Indications | Tubes with Indications |
|---|---|---|---|---|---|---|---|
| ≥ 50% | 0 | 0 | 0 | 1 | 0 | 1 | 1 |
| 35 - 49% | 2 | 0 | 0 | 1 | 0 | 3 | 3 |
| 20 - 34% | 86 | 0 | 0 | 0 | 2 | 86 | 74 |
| 10 - 19% | 705 | 108 | 0 | 0 | 0 | 813 | 406 |
| TW < 10% | 964 | 117 | 0 | 0 | 0 | 1081 | 600 |
| TOTAL | 1757 | 225 | 0 | 2 | 2 | **1984** | **734*** |

| Steam Generator SG2E89 (Through-Wall Wear) | Anti-Vibration Bar | Tube Support Plate | U-Bend Freespan | Retainer Bar | Foreign Object | Total Indications | Tubes with Indications |
|---|---|---|---|---|---|---|---|
| ≥ 50% | 0 | 0 | 0 | 1 | 0 | 1 | 1 |
| 35 - 49% | 0 | 0 | 0 | 1 | 0 | 1 | 1 |
| 20 - 34% | 78 | 1 | 0 | 3 | 0 | 82 | 67 |
| 10 - 19% | 1014 | 85 | 2 | 0 | 0 | 1101 | 496 |
| TW < 10% | 1499 | 53 | 0 | 0 | 0 | 1552 | 768 |
| TOTAL | 2591 | 139 | 2 | 5 | 0 | **2737** | **861*** |

*This value is the number of tubes with wear indications of any depth and at any location. Since many tubes have indications in more than one depth and location, the total number of tubes is less than the total number of indications.

## 1.5 Description of Steam Generator Inspections at SONGS Unit 3

After shutdown, the licensee started preparations for performing inspections of Unit 3 steam generators 3E0-89 and 3E0-88. The steam generator tube inspections commenced on February 12, 2012, and confirmed the location of the leak in steam generator 3E0-88 as coming from the tube in Row 106 Column 78. The leak was located 2 inches beyond anti-vibration support number 4 on the hot leg side. It was found to be associated with a long (approximately 30 inches) free-span flaw indication. No other tubes were found to be leaking.

The licensee then performed eddy current inspections of 100 percent of the tubes, full length, in both Unit 3 steam generators with a bobbin probe. The bobbin probe examinations were supplemented by rotating coil examinations to confirm, characterize,

and size the indications found by the bobbin probe. These examinations identified over 160 tubes in each steam generator with long free-span indications similar to that found on the leaking tube. In each steam generator, the tubes containing the free-span indications were grouped together in a tightly packed zone near the center of the tube bundle. The free-span indications were located on the upper and/or lower sides (i.e., the extrados and intrados) of the u-bend. Thus, a given free-span indication on the extrados of one tube tended to be matched by a similar indication on the intrados of the adjacent higher row tube located in the same tube column. This pattern provided early evidence to SCE personnel that the free-span indications were wear flaws due to tube-to-tube contact from motion of the u-bends within the plane of the u-bends. More than half of the free-span indications in each steam generator had maximum measured depths exceeding the 35 percent plugging limit in the technical specifications, and ranged to as much as 99 percent (for the non-leaking tubes).

Over 460 tubes in each steam generator were found with wear indications at the tube support plates. In general, tubes exhibiting the free-span wear indications tended to exhibit tube support plate indications with the highest depth measurements, typically with the deepest values at the seventh tube support plate and trending down at successively lower support levels. Approximately 170 tubes in each steam generator exhibited indications at the tube support plates that exceeded the 35 percent plugging limit, with maximum depths ranging to 70 percent.

Approximately 800 tubes in steam generator 3E0-88 and 900 tubes in steam generator 3E0-89 exhibited wear indications at the anti-vibration bar supports. Most of these measured less than 20 percent deep, and only 2 indications exceeded the 35 percent plugging limit. For tube indications at anti-vibration bars in tubes not exhibiting free-span u-bend indications, the length of the wear indications was confined to within the width of the anti-vibration bars. For tubes that exhibited free-span indications, many of these tubes had wear indications at the anti-vibration bars that extended outside the width of the anti-vibration bars which indicated in-plane movement of these tubes in the u-bend area.

Four tubes were found with indications at retainer bar intersections, with measured depths ranging from 28 to 46 percent. At the time of the team's presence at the site, planned corrective actions with respect to tubes adjacent to the retainer bar were similar to those completed for Unit 2. The four tubes with retainer bar indications were plugged and stabilized. In addition, the remaining 184 tubes (total for both Unit 3 steam generators) that intersect the retainer bars were plugged as a preventive measure. Twenty four of these tubes were stabilized prior. The tubes that were stabilized are strategically located at each end and center of the retainer bars.

Tube wear data for Unit 3 is shown below.

**SONGS Unit 3 Steam Generators**
**Wear Depths Summary**

| Steam Generator SG3E88 (Through-Wall Wear) | Anti-Vibration Bar | Tube Support Plate | Tube-to-Tube Wear | Retainer Bar | Foreign Object | Total Indications | Tubes with Indications |
|---|---|---|---|---|---|---|---|
| ≥ 50% | 0 | 117 | 48 | 0 | 0 | 165 | 74 |
| 35 - 49% | 3 | 217 | 116 | 2 | 0 | 338 | 119 |
| 20 - 34% | 156 | 506 | 134 | 1 | 0 | 797 | 197 |
| 10 - 19% | 1380 | 542 | 98 | 0 | 0 | 2020 | 554 |
| TW < 10% | 1818 | 55 | 11 | 0 | 0 | 1884 | 817 |
| TOTAL | 3357 | 1437 | 407 | 3 | 0 | 5204 | 919* |

| Steam Generator SG3E89 (Through-Wall Wear) | Anti-Vibration Bar | Tube Support Plate | Tube-to-Tube Wear | Retainer Bar | Foreign Object | Total Indications | Tubes with Indications |
|---|---|---|---|---|---|---|---|
| ≥ 50% | 0 | 91 | 26 | 0 | 0 | 117 | 60 |
| 35 - 49% | 0 | 252 | 102 | 1 | 0 | 355 | 128 |
| 20 - 34% | 45 | 487 | 215 | 0 | 0 | 747 | 175 |
| 10 - 19% | 940 | 590 | 72 | 0 | 0 | 1602 | 450 |
| TW < 10% | 2164 | 94 | 1 | 0 | 0 | 2259 | 838 |
| TOTAL | 3149 | 1514 | 416 | 1 | 0 | **5080** | **887*** |

*This value is the number of tubes with wear indications of any depth and at any location. Since many tubes have indications in more than one depth and location, the total number of tubes is less than the total number of indications.

1.6 In-Situ Pressure Testing

Technical Specification 5.5.2.11.a for SONGS Units 2 and 3 requires that a condition monitoring assessment be performed during each outage that the steam generator tubes are inspected or plugged to confirm that the tube integrity performance criteria are being met. These performance criteria include specific requirements for tube structural integrity and accident induced leakage. The limiting structural criterion applicable to the SONGS Units 2 and 3 is the normal steady state pressure differential across the tubes times a safety factor of three. The limiting accident induced leakage criterion is 0.5 gpm per steam generator.

Typically, the requirement for performing condition monitoring is satisfied by analyzing eddy current flaw indications relative to screening criteria that are functions of measured flaw depth, length, and/or eddy current voltage response. These screening criteria are

conservative relative to the performance criteria since they make allowance for eddy current measurement error, uncertainties with respect to voltage correlations with flaw depth and burst strength, and material property variability. When these screening criteria are exceeded, in-situ pressure tests may be performed for tubes not meeting the screening criteria to confirm that the performance criteria are met for these tubes. In-situ pressure test procedures at SONGS and the screening criteria for selecting tubes to be tested were in accordance with Electrical Power Research Institute Report 1014983, "Steam Generator In-Situ Pressure Test Guidelines," Revision 3.

At Unit 2, one tube with a measured 90 percent deep indication at a retainer bar location was determined to be outside the screening criteria and was in-situ pressure tested. For Unit 3, an optional strategy to the screening criteria approach was taken in accordance with the Steam Generator In-Situ Pressure Test Guidelines, Appendix A. The Appendix A approach is a statistically based Monte Carlo approach that samples the uncertainty distributions associated with each of the input parameters for calculating tube burst pressure. This methodology selects all tubes determined to have a 0.95 probability or less of meeting the limiting structural integrity performance criterion. Application of this methodology led to selection of 129 tubes on Unit 3 for in-situ pressure testing, 73 tubes in steam generator 3E0-88 and 56 tubes in steam generator 3E0-89.

The in-situ pressure tests were performed under ambient conditions. Therefore the test pressures were adjusted upward from actual values under hot conditions to account for the increased yield and ultimate strength of the tube material under ambient conditions. The test pressures (with correction factors added) corresponding to normal operating conditions, main steam line break, and three times normal operating pressure differential were 1850 psi, 3200 psi, and 5300 psi, respectively.

The test procedure involved pressurizing the subject tube at a rate not to exceed 200 psi/sec to each test point. At each test point, pressure was held constant for two minutes if the tube was not leaking. If the tube was leaking, pressure was held constant for five minutes before ramping to the next test pressure.

The tube with a 90 percent deep retainer bar indication in Unit 2 was successfully tested to 5300 psi with no leakage. This demonstrated that all performance criteria were met for this tube. For Unit 3, 136 of the 144 tubes were successfully tested to 5300 psi with no leakage, demonstrating that these tubes met the performance criteria. The remaining eight tubes "failed" prior to reaching 5300 psi. Failure in this context means that leakage occurred in excess of the 4.5 gallons per minute pump capacity during the test, and test pressure could not be maintained. All eight tubes that failed were in steam generator 3E0-88. All tubes tested in steam generator 3E0-89 passed with no leakage.

Table 1 summarizes the in-situ pressure test results for the eight tubes that failed the test. Three of the eight tubes failed at or below the test pressure corresponding to main steam line break differential pressure. The tube that leaked causing shutdown of SONGS Unit 3 (row 106, column 78) exhibited the lowest failure pressure, 2874 psi. The three tubes that failed at or below main steam line break pressure failed to meet the accident leakage performance criteria as well as the structural integrity performance

criteria. The other five tubes met the accident leakage criteria, but failed to meet the structural criteria.

Prior to being tested to failure, the tube that leaked during operation (row 106, column 78) exhibited a measured leak rate of 0.072 gallons per minute at a test pressure corresponding to normal operating conditions. This compares with a leak rate of 0.06 gallons per minute measured by SCE operating staff for SONGS Unit 3 when they made the decision to shut the plant down. The reported operational leakage was evaluated based on ambient conditions. Both the operational and test measurements are less than the applicable technical specification limit of 0.1 gallons per minute.

Table 1 – SONGS 3 In-Situ Pressure Test Results

| SG | Row | Column | Leak Rate at Normal Operating Conditions (gpm) | Leak Rate at Main Steam Line Break (gpm) | Failure Pressure (psi) |
|---|---|---|---|---|---|
| 88 | 106 | 78 | 0.072 | >0.5 | 2874 |
| 88 | 102 | 78 | 0 | >0.5 | 3268 |
| 88 | 104 | 78 | 0 | >0.5 | 3180 |
| 88 | 100 | 80 | 0 | >0.5 | 4732 |
| 88 | 107 | 77 | 0 | >0.5 | 5160 |
| 88 | 101 | 81 | 0 | >0.5 | 4889 |
| 88 | 98 | 80 | 0 | >0.5 | 4886 |
| 88 | 99 | 81 | 0 | >0.5 | 5026 |

## 2.0 Probable Cause Evaluation (Charter Item 2)

While the team was on-site, both SCE and Mitsubishi were in the process of conducting cause evaluations for the tube failure and unexpected wear of steam generator tubes in Unit 3. As part of both evaluations, actions were being taken to understand the differences between Unit 2 and 3 steam generators. The cause evaluations were not complete and were undergoing changes while the Augmented Inspection Team was onsite; however, SCE did subsequently complete their cause evaluation prior to the team's exit meeting. The team did a detailed review of the completed cause evaluation.

2.1 SCE Cause Evaluation

a. Inspection Scope

The team conducted an overall and independent review of SCE's actions taken to understand the probable cause for the steam generator tube degradation. The team reviewed the updated final safety analysis report, technical specifications, design basis documents, original steam generator design, replacement steam generator design, purchase order specifications, design changes, manufacturing changes, nonconformance reports, supplier deviation reports, and interviewed personnel. The review included understanding the licensee's criteria for determining the cause, or if one could not be determined, the most probable cause.

b. Observations and Findings

No findings were identified.

The team participated in discussions with the licensee's cause analysis team and noted that the licensee employed various root cause evaluation techniques. These included a change analysis technique that compared design differences and a problem analysis technique relying on a systematic process that looked at the causal effects and risk assessments of possible causes. The team reviewed the licensee causal analysis summary that assigned a ranking of highly probable to unlikely.

In the area of thermal hydraulic analysis the licensee contracted AREVA to verify the accuracy of Mitsubishi's thermal-hydraulic code (FIT III) used during the design of the replacement steam generators, by comparing it to ATHOS, a thermal-hydraulic code developed by the Electric Power Research Institute (EPRI). In addition, SCE contracted Westinghouse to perform a completely independent analysis using a Westinghouse modified ATHOS thermal-hydraulic code. AREVA also performed independent flow induced vibration analyses. The licensee brought on board MPR associates and numerous other technical experts, including a world renowned expert in flow induced vibration, to assist in the cause assessment. The team observed that SCE preliminary causal analysis was generally consistent with that of Mitsubishi. Initially, the licensee reviewed the following cause contributors:

- Departure from original steam generator u-bend/anti-vibration bar configuration - highly probable
- Departure from original steam generator stay cylinder configuration - possible
- Departure from original steam generator tube support plate configuration - possible
- Replacement steam generator anti-vibration bar structure too flexible - possible
- Additional 300 rotations of Unit 3 replacement steam generator due to divider plate repair work - possible
- Thermal-hydraulic and flow induced vibration models used in replacement steam generator design incorrectly predicted replacement steam generator tube bundle behavior – possible

The team observed that the licensee performed a detailed analysis and attempted to

address all probable causes. The team observed that some of the conditions which were eliminated as potential contributors may need further evaluation. In particular, the team determined that the only major difference between Units 2 and 3 was the divider plate repair to both Unit 3 steam generators. This difference had been discounted by both SCE and Mitsubishi. The divider plate is further discussed in Section 12.0 of this report.

The completed SCE cause evaluation identified the mechanistic cause of the tube-to-tube wear as fluid-elastic instability caused by a combination of localized high steam/water velocity, high steam void fraction, and insufficient contact forces between the anti-vibration bars and the tubes.

c. Conclusions

The team independently concluded that the combination of higher than predicted thermal-hydraulic conditions and insufficient contact forces in the upper tube bundle caused the fluid-elastic instability vibration.

2.2 Mitsubishi Cause Evaluation

a. Inspection Scope

The team conducted an overall and independent review of Mitsubishi's actions taken to understand the probable cause of the steam generator tube degradation. While onsite, the inspection team was informed that Mitsubishi was performing a failure analysis to characterize the mechanism causing the tube-to-tube wear condition in Unit 3. The team had periodic discussions with Mitsubishi personnel to gather information on the probable causes under consideration. The team reviewed information contained in the updated final safety analysis report, technical specifications, design basis documents, purchase order specifications, design changes, design drawings, manufacturing changes, nonconformance reports, and supplier deviation reports to understand the design and fabrication of the replacement steam generators and independently assess the information obtained from Mitsubishi's in-progress cause evaluation.

b. Observations and Findings

No findings were identified.

The team determined that Mitsubishi was performing a thorough evaluation of the failure mechanism leading to the tube-to-tube wear in Unit 3. The team noted that Mitsubishi gathered factual information about the design, fabrication, and operation of the replacement steam generators in Unit 2 and Unit 3 to understand the differences between these components and identify potential contributing causes. The team discussed the preliminary failure mechanism theory with Mitsubishi personnel, who attributed the tube-to-tube; wear to a combination of design, fabrication, and operational factors.

Mitsubishi's preliminary explanation of the failure mechanism started with the combination of two factors: (1) a relatively small tube pitch to tube diameter ratio (P/D),

and (2) high void fraction in the tube bundle area where the tube-to-tube wear was identified. The small pitch to diameter ratio was a fixed parameter in the replacement steam generators established by the nominal center-to-center distance between adjacent tubes (P) and the nominal outside diameter of the tubes (D). The high void fraction was identified from the results of Mitsubishi's thermal-hydraulic model for the secondary side of the replacement steam generators. Mitsubishi considered that the combination of these two factors may have resulted in favorable conditions for in-plane tube vibration based, in part, on the results of recent studies in fluid-elastic instability.

Additionally, Mitsubishi identified that the Unit 3 replacement steam generators had better dimensional controls during the fabrication process. This determination was based, in part, on the results of pre-service and in-service eddy current examinations, and fabrication data from Unit 2 and Unit 3 replacement steam generators. The correlation of dimensional controls with the failure mechanism was that improved dimensional controls for Unit 3 replacement steam generators resulted in less variability of as-built critical dimensions such as anti-vibration bar thickness, tube roundness, and gaps between tubes and anti-vibration bars. .

The failure mechanism model also considered a fluid dynamic effect associated with the spreading of the tubes in the U-bend region during normal operating conditions. This effect was informally referred to as "flowering," due to the characteristic shape in which the tube bundle spreads transverse to the plane of the u-bends at normal operating conditions. "Flowering" was described as the elastic deformation of the anti-vibration bar structure and the tube bundle in the U-bend region, as a result of thermal expansion and fluid dynamic pressure acting on the secondary side of the tubes (see figure below). The deformation caused by the "flowering" effect was believed to result in multiple areas of no contact between the anti-vibration bars and the tubes, which minimized resistance to in-plane motion of the u-bend area of the tubes.

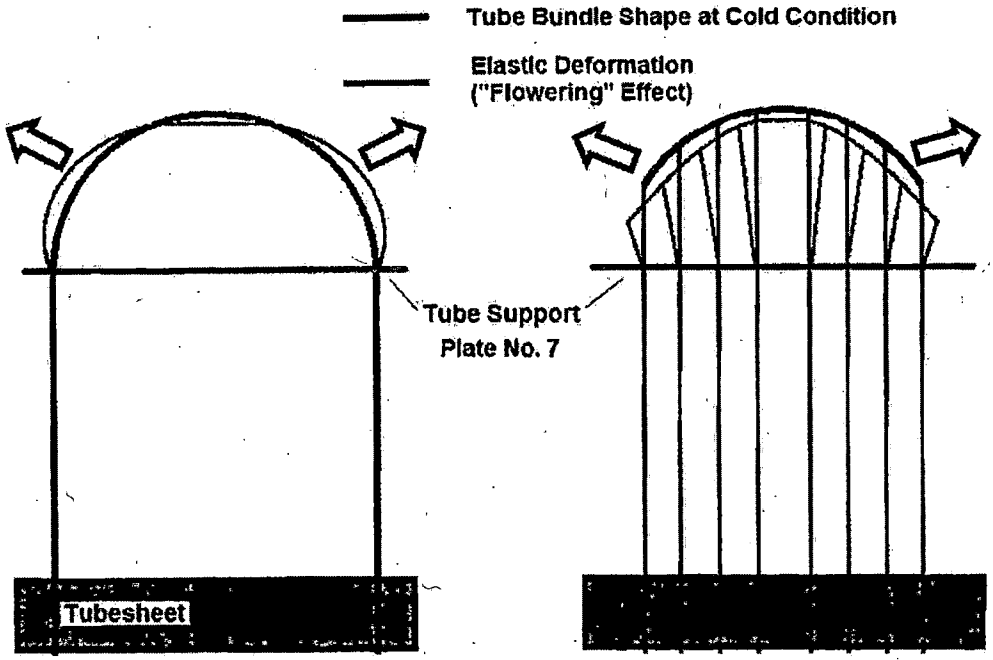


Description of "Flowering" Effect (Conceptual Drawing – For Illustration Purposes Only)

Mitsubishi considered that the collective contribution of the factors described above resulted in conditions in the U-bend that were highly susceptible to excessive tube vibration. The in-plane vibration of the tubes in the U-bend region allowed direct contact between free-span sections of the tubes, resulting in the unanticipated tube-to-tube wear.

At the conclusion of the onsite portion of this inspection, Mitsubishi was further evaluating the failure mechanism by conducting in-depth analyses of available data to validate their failure mechanism theory. One of the analyses included analytical studies of the impact of anti-vibration bar gap size, free-span length, fluid-elastic vibration, and contact forces on tube wear depth. An expected outcome of this analysis was that contact forces and the number of inactive supports should be the biggest contributors to wear under fluid-elastic instability conditions. Additionally, Mitsubishi was conducting further analytical studies of the "flowering" effect by modeling multiple cases of elastic displacement of the tube bundle structure, taking into consideration thermal expansion and dynamic pressures. Concurrent with these analyses, Mitsubishi was studying the effect of manufacturing dispersion on tube wear. Specifically, Mitsubishi was modeling multiple cases of manufacturing variability to study the influence of different dimensional controls on gap and contact forces. Mitsubishi was using as-built data as well as manufacturing tolerances to statistically assess the impact of dimensional controls on the resulting gaps and contact forces in different areas of the tube bundle. Based on the data reviewed by the team, the standard deviation of the tube ovality (G-value) decreased during each successive fabrication run of the steam generator tubes (order of tube fabrication -> U2E0-89, U2E0-88, U3E0-89, and U3E0-88). One of the expected

outcomes of this analysis was that manufacturing variability in Unit 3, in combination with the "flowering" effect, would result in a reduction of contact forces in Unit 3 relative to those in Unit 2. During the on-site portion of this inspection, the results of these studies were not finalized and additional failure analysis tasks were scheduled to accurately characterize the failure mechanism and support the cause determination.

c. Conclusions

At the time of the exit, Mitsubishi was still completing their independent cause analysis. As part of the Confirmatory Action Letter inspection, the final Mitsubishi cause evaluation will be reviewed.

3.0 Operational Differences in Configuration and Operation between Unit 2 and 3 (Charter item 3)

a. Inspection Scope

The team reviewed Unit 2 and 3 Cycle 16 operational data records found in operator logs and the plant computer system. The team focused on differences in configuration and operation between Units 2 and 3. The team evaluated full power operational data between Unit 2 and Unit 3 steam generators after each were replaced. From this data the team compared key plant parameters and other indications such as temperature, flow, power, pressure, and vibration and loose parts monitoring alarms. The team reviewed operational differences between Units 2 and 3 in order to gain information and to assess if these differences could have had an impact on the observed differences in the steam generator tube wear between the units.

b. Observations and Findings

No findings were identified.

The team identified one unresolved item for which additional information is required to determine if a performance deficiency exists or if the issue constitutes a violation of NRC requirements. The team also modeled the impact of operational differences on the predicted thermal-hydraulic response of the steam generators.

(1) Introduction: The team identified an unresolved item associated with the number of valid vibration and loose parts alarms observed in Unit 3 steam generators compared to Unit 2 steam generators, during steady state conditions.

Description: During the review of operational differences between Unit 2 and 3 steam generators the team identified a significant difference in number of valid vibration and loose parts monitoring system alarms. The vibration and loose parts monitoring system was designed to provide continuous monitoring and conditioning of loose parts accelerometer signals. Two separate accelerometers were installed on each of the steam generators. The location of these instruments are on the steam generators' lower supporting structures and provide acoustic information about loose parts impacts specifically on the reactor coolant or primary side of the steam generators. The vibration and loose parts monitoring system real time

functions consist mainly of impact alarm validation of suspected loose part events and recording acoustic data. Long term vibration monitoring and loose part event trending were done by engineering personnel using recorded data.

Unit 3 returned to service in February 2011, and the resident inspectors noted a number of nuclear notifications associated with Unit 3 steam generators vibration and loose parts monitoring alarms. On January 20, 2012, prior to the Unit 3 tube leak, engineering personnel also identified this trend and documented in Nuclear Notification NN 201818719 this problem and assigned an action to do further evaluation. On February 3, 2012, engineering personnel sent two sets of alarm signatures to Westinghouse, which contained impact data on alarms for time periods of steady state operation (i.e., no major temperature changes). Westinghouse engineering personnel concluded that the acoustic signals picked up by the accelerometers were valid and similar in nature to acoustic signatures caused by thermal movement of a steam generator expected during changes in thermal conditions, such as plant startup or shutdown. However the data obtained and analyzed had been taken during steady state operations. The team noted that Unit 2 steam generators did not receive the same number and type of alarms during a similar period of steady state operations. Engineering personnel also compared hot leg temperature changes linked to Unit 3 operations from February 18, 2011, to January 31, 2012, and confirmed about 30 valid alarms during this period were not associated with thermal transients.

Additional review and follow up will be required of the vibration and loose parts monitoring system alarms, including evaluation and disposition of Unit 3 alarms and then determine whether this issue represents a performance deficiency or constitutes a violation of NRC requirements. This issue is identified as URI 05000362/2012007-02, "Evaluation of Unit 3 Vibration and Loose Parts Monitoring System Alarms."

(2) Operational Differences: The team performed a number of different thermal-hydraulic analysis of Units 2 and 3 steam generators. The output of the various analyses runs where then compared and reviewed to determine if those differences could have contributed to the significant change in steam generator tube wear. It was noted that Unit 3 ran with slightly higher primary temperatures, about 4°F higher than Unit 2. Other differences were noted in steam and feedwater flow but none of the differences were considered sufficient to significantly affect thermal hydraulic characteristics inside the steam generators. The different analyses included:

- Lower bounding thermal hydraulic analysis using the steam generator base design condition, where primary inlet temperature was 598°F, and an upper bound case where primary inlet temperature was 611°F as identified in Mitsubishi Document L5-04GA021, Revision 3
- Varying steam generator pressures from 833 to 942 psia
- Steam mass flow rates from 7.59 to 7.62 Mlbm/hr
- Primary loop volumetric flow rate from 102,000 to 104,000 gpm, and
- Recirculation ratio from 3.2 to 3.5.

c. Conclusions

The team identified one unresolved item associated with SCE's evaluation of the Unit 3 loose parts monitoring alarms.

The result of the independent NRC thermal-hydraulic analysis indicated that differences in the actual operation between units and/or individual steam generators had an insignificant impact on the results and in fact, the team did not identify any changes in steam velocities or void fractions that could attribute to the differences in tube wear between the units or steam generators. It should be noted that increases in primary temperature and steam generator pressures has the effect of reducing void fractions and peak steam velocities, which slightly decreases the conditions necessary for fluid elastic instability and fluid-induced vibration.

4.0 Design and Manufacturing Differences (Charter Item #4) (Mitsubishi Charter Item 1)

During the development of the charter, it was not known how SCE and Mitsubishi reviewed and approved design and manufacturing changes. During the inspection, it was identified that all design and manufacturing changes proposed by Mitsubishi required review and approval from a SCE representative. Based on this, it was determined that this area could be covered as one item.

a. Inspection Scope

The team interviewed licensee and Mitsubishi personnel involved in the design and fabrication of the replacement steam generators and reviewed information including nonconformance reports, design drawings, fabrication procedures, design changes, engineering evaluations, supplier deviation requests, and design specifications to identify conditions affecting quality that resulted in relevant design differences between the replacement steam generators. The team assessed whether these differences could be considered as contributing factors for the cause of the tube-to-tube wear issue in Unit 3. The team also reviewed Engineering Change Packages 800071702 and 800071703 for the Unit 2 and Unit 3 replacement steam generators, respectively, with emphasis on changes made to the design methodology described in the updated final safety analysis report for the original steam generators to verify that the evaluation was performed in accordance with licensee procedures and the provisions of 10CFR 50.59, "Changes, Tests, and Experiments."

b. Observations and Findings

No findings were identified.

The team identified two unresolved items for which additional information is required to determine if performance deficiencies exist or if the issues constitute violations of NRC requirements. The team also identified several observations related to the design, fabrication, and the engineering change package for the Unit 2 and Unit 3 replacement steam generators.

(1) Introduction: The team identified an unresolved item associated with the design of the retainer bars in Unit 2 and Unit 3 replacement steam generators.

Description: In February 2012, the licensee identified wear indications in Unit 2 replacement steam generators at the tube locations in contact with the retainer bars (see figure below). Some of the indications showed excessive wear with a maximum degradation of 90 percent through wall.

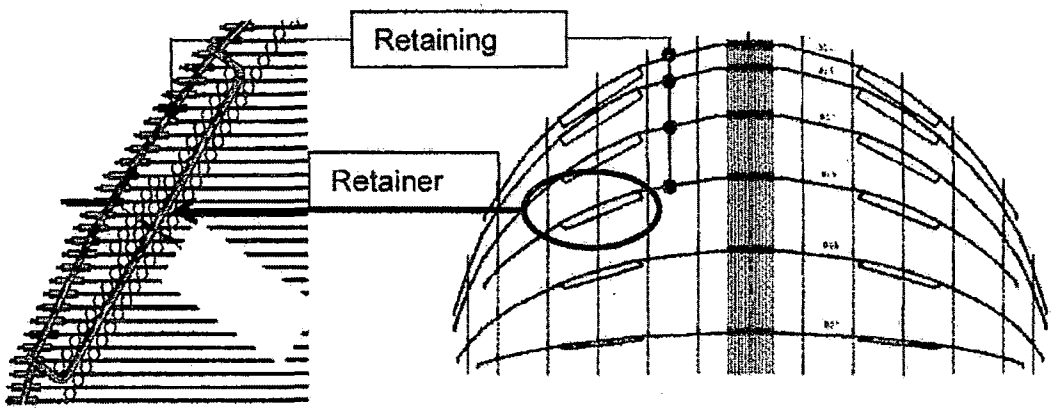


**Retainer Bar Design and Location of Affected Tubes (For Illustration Purposes Only)**

The team identified that the design of the replacement steam generators did not expect any potential vibration concerns in the area of the tube bundle where the retainer bars were located. The basis for Mitsubishi's design philosophy relied on the following factors:

- Based on the calculated natural frequency of the retainer bar, Mitsubishi considered that there would not be a resonant vibration condition relative to the flow conditions in the location of retainer bars.
- The vibration analysis of the tube bundle only considered out-of-plane vibration because in-plane vibration was not expected to be an operational concern for the retainer bars.
- The outermost tubes were considered the least susceptible to flow-elastic instability; therefore retainer bar locations were not included in the vibration analysis.
- Fluid-elastic instability was found not applicable to the retainer bar because this mechanism did not apply to a single tube in cross flow.
- Vortex-induced vibration was found not applicable to the retainer bar because it was considered a vibration mode applicable to a single cylinder in uniform cross flow in a large area and the flow condition around the retainer bars was considered slug-froth two phase flow.

However, upon identification of retainer bar-to-tube wear in Unit 2 replacement steam generators, Mitsubishi performed an evaluation to identify the cause of excessive wear. The analysis considered three vibration mechanisms: fluid-elastic

instability, vortex-induced vibration, and turbulence-induced vibration (random vibration). The analysis for turbulence-induced vibration determined that random vibration was the possible cause of the retainer vibration, based on the peculiar flow around the retainer bar, combined with the rather low natural frequency of the retainer bar. The analysis used the two phase flow conditions around the retainer bars and identified various modes of vibration at those flow conditions that could lead to retainer bar vibration and consequently to tube wear.

Additional review by the NRC is required following completion of the licensee's cause evaluation to determine whether this issue represents a performance deficiency or constitutes a violation of NRC requirements. This issue is identified as URI 05000362/2012007-03, "Evaluation of Retainer Bars Vibration during the Original Design of the Replacement Steam Generators."

(2) Introduction: The team identified an unresolved item associated with the dimensional controls of critical dimensions throughout the fabrication of Unit 2 and Unit 3 replacement steam generators.

Description: Based on the information gathered by the team on the differences in dimensional controls of critical parameters in Unit 2 and Unit 3 replacement steam generators, the team determined that Mitsubishi did not consider the potential impact of improving dimensional controls for tube roundness and anti-vibration bars on the final tube bundle clearances at normal operating conditions.

Additional review by the NRC is required following completion of the licensee's cause evaluation to fully assess how the dimensional controls contributed to the tube-to-tube wear in Unit 3 and then determine whether this issue represents a performance deficiency or constitutes a violation of NRC requirements. This issue is identified as URI 05000362/2012007-04, "Evaluation of Changes in Dimensional Controls during the Fabrication of Unit 2 and Unit 3 Replacement Steam Generators."

(3) Design Differences: The team did not identify any significant differences in the design requirements of Unit 2 and Unit 3 replacement steam generators. The "Conformed Specification for Design and Fabrication of the Replacement Steam Generators," also known as the design specification, contained identical technical requirements for Unit 2 and Unit 3 steam generators. All replacement steam generators were required to be designed, fabricated, and tested in accordance with the 1998 edition of the American Society of Mechanical Engineers (ASME) Boiler and Pressure Vessel Code, with the 2000 Addenda, industry standards, and NRC endorsed methods described in applicable regulatory guides. The licensee specified the same licensing requirements for all replacement steam generators.

The design specification also contained provisions to address technical or quality deviations from the requirements of the purchase order or the design specifications, including the disposition of "Repair" or "Accept as-is" conditions captured as non-conformance reports in Mitsubishi's quality assurance program and changes to documents previously approved by the licensee. This process was referred to as "Supplier Deviation Request" and allowed the licensee to review and approve deviations from the approved design specifications. The team noted that changes

affecting the specified design were submitted to SCE personnel for review and approval.

The team noted that the design specification established identical provisions for the design of the replacement steam generator components including the vessel, upper/lower shell, transition cone, tubesheet, channel head, divider plate, tube supports, tubing, steam nozzle, feedwater nozzle, primary nozzles, steam flow limiting device, moisture separators/dryers, feedwater distribution system, blowdown and sludge management, access/inspection ports, instrument/sampling taps, and loose part monitoring.

The design specification also established identical requirements for the service life and service environmental conditions of the replacement steam generators. The licensee also specified identical design loading, structural, and seismic requirements for all replacement steam generators. The design specification contained identical requirements for design transients under normal, upset, emergency, faulted, and test conditions.

Additionally, the performance requirements in the design specification were identical for each replacement steam generator, which included:

- Water Level Stability
- Circulation Ratio
- Moisture Carryover
- Steam Carryunder in the Downcomer Annulus
- Reactor Coolant Flow Rate
- Primary-To-Secondary Leakage
- Blowdown Capacity
- Thermal Rating
- Heat Transfer Surface Area
- Tube Plugging Margin
- Fouling Factor
- Overall Heat Transfer Coefficient
- Primary Side Design and Operating Pressure/Temperatures
- Secondary Side Design and Operating Pressures/Temperatures
- Primary Side Design and Operating Flows
- Secondary Side Design and Operating Flows
- Tube Material and Dimensions

The replacement steam generator design developed by Mitsubishi for SONGS Unit 2 and Unit 3 in accordance with the licensee's design specification was translated into the same set of design and fabrication drawings. The team noted that some as-built dimensions varied between Unit 2 and Unit 3 steam generators as a result of the divider plate weld repairs in Unit 3 and other manufacturing processes. However, these dimensional changes did not represent significant deviations from the original design specifications.

(4) Fabrication Differences: The team noted that the design specification contained the same general fabrication requirements for the Unit 2 and Unit 3 replacement steam generators. The design specification contained the methods required for fabrication, assembly, inspection, and testing of the replacement steam generators. The specification covered, in part, fabrication requirements for the channel head cladding, tube dimensions, tube wall thickness, tube bend radius, tube "ovality," tubesheet, tube-to-tubesheet joints, tube supports, tube bundle, machined gasketed surfaces, non-ASME steam generator internals, welding methods, post-weld heat treatment, and allowable welding materials. The specification also contained detailed requirements for inspections, tests, and examinations, which included examination methods and personnel qualification requirements.

The design specification also required the use of "Supplier Deviation Requests" to address technical or quality deviations from the requirements of the Purchase Order or the design specifications, including the disposition of "Repair" or "Accept as-is" conditions identified during the fabrication process and changes to fabrication documents previously approved by the licensee. The team noted that fabrication issues affecting the specified design were submitted to SCE personnel for review and approval.

Based on discussions with SCE and Mitsubishi personnel and the review of documentation about the fabrication history of Unit 2 and Unit 3 replacement steam generators, the team identified the differences listed below. At the conclusion of the onsite portion of this inspection, the differences between Unit 2 and Unit 3 steam generators as a result of the fabrication process were under consideration for the cause evaluation.

- Steam Dryer Assembly – During the fabrication of Unit 2 steam generator 2E0-89, Mitsubishi identified a nonconforming condition of the steam dryer assembly that included damaged locking plates of vane jacking devices, displaced bolts, and damaged vanes. The cause of this issue was determined to be inadequate evaluation and control of the design in regard the capacity of the vane jacking devices to sustain all fabrication conditions. Specifically, the vane jacking devices failed to stay in the design position during multiple rotations of the steam generator assembly during fabrication. Mitsubishi corrected the condition, in part, by replacing all vane jacking devices and damaged vanes with a new design, which was also used in the fabrication of the Unit 2 steam generator 2E0-88, and Unit 3 steam generators 3E0-89 and 3E0-88. Additionally, Mitsubishi modified the assembly sequence of the steam dryers. For Unit 2 steam generator 2E0-89, the steam dryer vanes were assembled in-situ while the steam dryers for Unit 2 steam generator 2E0-88 and Unit 3 steam generators 3E0-88 and 3E0-89 were preassembled before installation in their final position.

- Drilling of Tubesheet Holes – The tubesheet holes in Unit 2 and Unit 3 steam generators where the tubes are inserted for final assembly were made with different drill bits. The Unit 2 steam generator tubesheets were drilled with uncoated drill bits. The Unit 3 steam generator tubesheets were drilled with

titanium-nitride coated drill bits, which improved the drill bit life and resolved tooling mark issues experienced in Unit 2.

- Transition Wrapper Welding – The welding of the transition wrapper was performed in different order for each unit. For Unit 2 steam generators, the transition wrapper was welded after the tubes and anti-vibration bars were installed. In Unit 3 steam generators, the transition wrapper was welded before the installation of tubes and anti-vibration bars.

- Cladding Removal Process for the Channel Head – The removal of the stainless steel clad weld from the interior surface of the channel head base metal in preparation for the divider plate weld (i.e. structural butter weld) was performed with different methods in Unit 2 and Unit 3 replacement steam generators. For Unit 2, Mitsubishi used a machining process to remove the cladding in both steam generators. In Unit 3, Mitsubishi used an air carbon-arc gouging process. This method resulted in separation of the butter weld during hydrostatic testing. The root cause evaluation concluded that the air carbon-arc gouging process left carbon deposits on the base metal. Gouging was followed by grinding which was designed to remove the heat affected zone and expected to completely remove the carbon deposits. However, the grinding process left carbon deposits behind, which resulted in the localized areas of high carbon and high base metal hardness due to carburization. The repair of the Unit 3 divider plate welds is addressed in further details in Section 12.0 of this report.

- Helium Leak Test – As part of the fabrication process, Mitsubishi performed a Helium-Nitrogen leak test on the secondary side of the replacement steam generators to check for leaks on the tube-to-tubesheet welds. For all steam generators, this test was performed after completion of the tube-to-tubesheet weld, but prior to the penetrant examination of the tube-to-tubesheet welds and final tube expansion. The leak tests for Unit 2 steam generators were performed at a higher pressure than Unit 3 steam generators. Additionally, the Unit 2 tests were performed using a temporary welded cap on top of the steam generator shell to enclose the secondary side, while a temporary clamped cap was used in Unit 3 steam generators. All tests required the same holding time before starting the test and the same leak rate acceptance criteria.

- Preliminary and ASME Section III Hydrostatic Tests – The number of hydrostatic tests performed in accordance with ASME Section III on the primary and secondary sides of the replacement steam generators varied between Units due to the results of the initial test in each steam generator. For each replacement steam generator, the hydrostatic tests were performed first on the primary side and then on the secondary side. Both Unit 2 steam generators met the acceptance criteria in the first hydrostatic test. However, during the first hydrostatic test on the secondary side of Unit 3 steam generator 3E0-89, Mitsubishi identified leakage through a tube-to-tubesheet weld that exceeded the ASME Code acceptance criteria. After repairs were completed to address the leakage, the hydrostatic tests were re-performed. Following the second set of hydrostatic tests on Unit 3 steam generator 3E0-89, cracking indications were

identified in the divider plate-to-channel head weld. After repairs were completed to address the divider plate weld cracks, a third set of hydrostatic tests were performed in Unit 3 steam generator 3E0-89. Since similar cracking indications of the divider plate weld were identified in Unit 3 steam generator 3E0-88, a second set of hydrostatic tests was performed in this steam generator after the divider plate weld was repaired.

Additionally, prior to each ASME Section III hydrostatic test, Mitsubishi performed a preliminary hydrostatic test of the primary and secondary side of the steam generators at design pressure to check for leakage at the feed pump, pressure filling line, temporary gaskets, and temporary seals. Therefore, each replacement steam generator received an equal number of preliminary and ASME Section III Hydrostatic Tests. The total numbers of hydrostatic tests for each steam generator are summarized below.

| **Number of Preliminary and ASME Section III Hydrostatic Tests** | | | |
|---|---|---|---|
| **Steam Generator** | **Primary Side** | **Secondary Side** | **Results** |
| 2E0-89 | 1 | 1 | Acceptance criteria met |
| 2E0-88 | 1 | 1 | Acceptance criteria met |
| 3E0-89 | 1 | 1 | Leakage detected in tube-to-tubesheet weld |
| | 1 | 1 | Divider plate weld separation weld identified |
| | 1 | 1 | Final – Acceptance criteria met |
| 3E0-88 | 1 | 1 | Divider plate weld separation weld identified |
| | 1 | 1 | Final – Acceptance criteria met |

- Pre-Service Inspection – The design specification established similar requirements for the pre-service eddy current examination of Unit 2 and Unit 3 replacement steam generators. The team noted that the eddy current examinations of Unit 2 and Unit 3 steam generators were performed with similar eddy current techniques, including essential variables. However, the circumstances in which the examinations were performed varied for each Unit. For Unit 2, the pre-service examination was performed after the steam generators were delivered at the SONGS jobsite. The steam generators were examined on the shipping saddles, where the position of the tube bundle was at 45 degrees from the gravity neutral position. This position was dictated by the location of the steam generator lifting trunnions which were installed on the upper shell at 45 degree orientation from the steam generator centerline. For Unit 3, the pre-service eddy current examination was performed at the Mitsubishi Kobe facility while the steam generators were still on the fabrication rollers and in the gravity neutral position (i.e. divider plate oriented horizontally). The decision to perform the Unit 3 pre-service examination at the Mitsubishi facility was dictated by delivery schedule considerations resulting from the divider plate weld repairs.

- Flow Limiter for Primary Inlet Nozzles – The replacement steam generators were designed with a flow limiter located in the primary inlet nozzle (see figure below) in order to make the reactor coolant system flow similar to the flow rate of the original steam generator and not exceed the maximum allowable reactor coolant system flow rate. The licensee's evaluation for the engineering design package determined that although the original steam generators had a number of plugged tubes, the reactor coolant system flow rate of the original steam generators was near the design requirement. Because the replacement steam generators has 377 more tubes than the original steam generators, and contained tubes with u-bends versus "square bends", the pressure drop of the replacement steam generators with no plugged tubes would be much less than the original steam generators resulting in a higher flowrate.

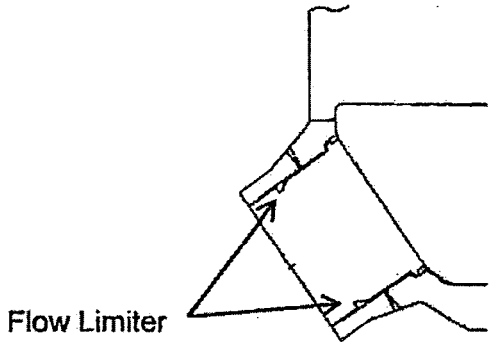


Replacement Steam Generator Primary Inlet Nozzle (For Illustration Purposes Only)

The flow limiter was designed to ensure the total "best estimate" reactor coolant flow rate with the replacement steam generators installed would not exceed 106.5 percent of the design volumetric flow rate of 396,000 gallons per minute at a reactor coolant system cold leg temperature of Tcold = 540.9°F. For Unit 2 replacement steam generators, the flow limiter diameter to nozzle inner diameter ratio was 0.94 while the ratio for Unit 3 steam generators was 0.915 due to Unit 3 reactor coolant pump replacement. The flow limiter dimensions resulted from a scaled model test performed by Mitsubishi and it was designed to be machined as part of the nozzle base metal.

- Pitch Distance of Tube Support Plate Drilled Holes in Unit 2 Steam Generator 2E0-89 – During fabrication of the tube support plates for Unit 2 steam generator 2E0-89, quality control inspections identified unacceptable measurements of the pitch distance between drilled holes. Mitsubishi fabrication procedures required verification of the total center-to-center distance between ten inline drilled holes at certain sample points of the tube support plate. The dimensional verification checks identified a total of 200 measurements in tube support plate number 3 and 10 measurements in tube support plate number 6 that did not meet the dimensional acceptance criteria established in the fabrication procedures. Mitsubishi evaluated this non-conformance condition and accepted the condition "as-is" with the SCE's approval. The technical justification for accepting the condition addressed four elements: (a) the impact of the condition on the ability to insert the tubes through the affected areas of the tube support plates, (b)

resulting stress on the tubes after insertion, (c) impact of the condition on the tube to anti-vibration gap size, and (d) possible occurrence of tube scratch during inspection. Similar unacceptable measurements were not identified in Unit 2 replacement steam generator 2E0-88 or Unit 3 replacement steam generators 3E0-89 and 3E0-88.

- Tube-to-Tube Clearance in Unit 2 steam generator 2E0-89 – During fabrication of Unit 2.replacement steam generator 2E0-89, interference checks identified that the clearance between the tubes in Rows No. 28 and 30 in Column No. 22 was less than the minimum clearance of 0.13-inch specified in Mitsubishi's inspection procedure. The condition was accepted "as-is" by Mitsubishi and SCE through the supplier deviation request process. The main considerations of the technical evaluation included: (a) thermal expansion difference, (b) tube expansion due to operating pressures, (c) tube displacement due to out-of-plane flow induced vibration, and (d) tube displacement due to seismic acceleration. The team noted that no tube-to-tube wear indications were identified in this area of the tube bundle.

- Anti-Vibration Bar Spacing Issues in Unit 2 Steam Generator 2E0-89 – During fabrication of Unit 2 replacement steam generator 2E0-89, quality control inspections identified unacceptable gaps between tubes and the anti-vibration bars in the outside tube columns. The affected area was identified as welding zone-4. The apparent cause for the anti-vibration bar spacing issue was due to performing the welding of zone-4 while the steam generator was oriented horizontally with this welding zone oriented to the bottom of the bundle. In this configuration, the tube bundle experienced sagging at the time of welding due to gravity. After completion of welding zone 4, the steam generator assembly was rotated 180 degrees for additional assembly steps, but the sagging in the opposite direction caused enlargement of the gaps in welding zone 4 and this enlargement remained approximately the same for all subsequent rotations. When zone-4 was rotated 180-degrees after welding, deflection or sagging of the tube retaining bars due to gravity slightly pulled the anti-vibration bars, increasing the gap between the tube and the anti-vibration bars in this zone.

  With the licensee's approval, Mitsubishi implemented various corrective actions to address the condition in the pending Unit 2 replacement steam generator 2E0-88 and subsequently in Unit 3 steam generators which included: (a) use of smaller spacer blocks between tubes for the installation of anti-vibration bars, (b) re-define the welding zones to limit welding in the horizontal position, and (c) reduce rotations during welding of the other bundle zones. Mitsubishi performed rework activities in Unit 2 steam generator 2E0-89 to restore anti-vibration bar spacing to design specifications. These activities resulted in better gap distribution. All the tube-to-anti-vibration bar gaps exceeding the initial dimensional criteria were further evaluated and accepted in accordance with Mitsubishi's gap size evaluation procedure.

- Rotations of Steam Generator Assembly for Anti-Vibration Bar Installation and Welding – The team noted that welding of anti-vibration bars structure required rotating the steam generators several times. As a result of the corrective actions

generated to address the anti-vibration bar spacing issues in Unit 2 steam generator 2E0-89, the installation procedure was revised to reduce the number of rotations for anti-vibration bar installation to attain better gap control. This procedure revision resulted in different number of rotations in each replacement steam generator. Steam generators Unit 2 E0-89, Unit 2 E0-88, Unit 3 E0-89, and Unit 3 E0-88 received 11.25, 4, 3.5, and 3.5 rotations, respectively, during installation of the anti-vibration bars structure.

- Temporary Installation of Plastic Ties – In order to limit the displacement of anti-vibration bars during rotation of the steam generator assembly for welding of the anti-vibration bars structure, Mitsubishi revised the installation procedure to install temporary plastic ties between the retaining bars and the tubes. This step of the anti-vibration bar assembly process was performed in a different sequence for Unit 2 and Unit 3 steam generators. For Unit 2, the installation of plastic ties occurred after welding the transition wrapper, the Helium leak test, and tube hydraulic expansion, but before welding the channel head to the tubesheet, the hydrostatic tests, and the pre-service inspection. In Unit 3, the installation of plastic ties was performed between welding the transition wrapper and the Helium leak test.

- Dimensional Controls of Anti-Vibration Bar Structure – According to Mitsubishi's preliminary cause evaluation taking place at the time of this inspection, the controls of critical dimensions affecting the clearances between the tube and the anti-vibration bars were gradually improved throughout the fabrication of the Unit 2 and Unit 3 steam generators. This improvement on dimensional controls was a consideration for the determination of the failure mechanism leading to tube-to-tube wear in Unit 3.

  The first dimensional control under consideration was the improvement of tube roundness in the section of the tubes that was bent to form the U-bend shape. During fabrication of Unit 2 steam generator 2E0-89, the supplier of tubular product for Mitsubishi (i.e. Sumitomo), experienced quality issues to meet the G-values established in the design specifications, resulting in a high number of tube rejections. The G-value was a measure of departure from roundness, or "ovality," after the tubes were bent and it was controlled in order to control the gap between tubes and anti-vibration bars (see figure below). The G-values were measured at different locations along the U-bend section of the tubes for a selected number of tubes per row, as established in Mitsubishi's procedure. The acceptance criteria for G-value varied depending on the row where the tubes were installed. The acceptance criteria also remained the same throughout the fabrication of Unit 2 and Unit 3 replacement steam generators.

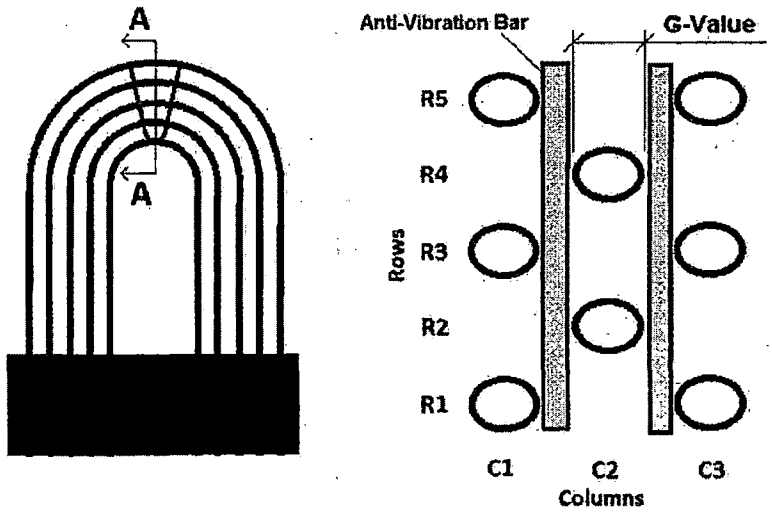


**Section A-A**

**Description of G-Value Parameter (Conceptual Drawing – For Illustration Purposes Only)**

Based on discussions with licensee personnel and documentation reviews, the team noted that Sumitomo implemented measures to improve the quality of the tube bending process which resulted in less deviation of G-values and a reduction in the amount and variability of tubing "ovality." Based on the statistical analysis of G-value data collected during fabrication of the Unit 2 and Unit 3 steam generators, Mitsubishi concluded that the G-values standard deviation gradually decreased since the fabrication of the first steam generator.

Another dimensional control under consideration was the variability of anti-vibration bar dimensions. Mitsubishi's fabrication procedures required inspection of various dimensions of the anti-vibration bars to control the gap between the anti-vibration bars and the tubes. These dimensions were: thickness in the straight sections, twisting and flatness of the straight sections after bending, and thickness of the anti-vibration bar tip (i.e. nose) after bending. Among these dimensions, the twisting and flatness of the straight sections after bending were verified using a "Go or No-Go" approach based on the acceptance criteria in Mitsubishi's procedures but no specific measurements were required to be maintained by procedure. Additionally, the acceptance criteria for anti-vibration bar dimensions remained the same throughout the fabrication of Unit 2 and Unit 3 replacement steam generators. Mitsubishi conducted a preliminary statistical analysis of the available dimensional data for anti-vibration bars and the team concurred that there were minor differences in the statistical distribution of these dimensions in Unit 2 and Unit 3 steam generators.

Engineering Change Package (10 CFR 50.59): The team determined that the licensee's evaluation for changes in the updated final safety analysis report's design methodologies for the replacement steam generators was consistent with SONGS procedures for the implementation of 10 CFR 50.59 requirements. The licensee's

evaluation contained in Engineering Change Packages 800071702 and 800071703 for the Unit 2 and Unit 3 replacement steam generators, respectively, determined that the replacement of the original steam generators did not affect the current licensing basis to the extent of needing prior approval from the NRC as required by 10 CFR 50.59.

In the 50.59 screening evaluation associated with the engineering change package for the Unit 2 and Unit 3 replacement steam generators, the licensee determined that the proposed activity did not adversely affect a design function, or the method of performing or controlling a design function described in the updated final safety analysis report. The licensee also determined that the steam generator replacement activity did not change a procedure in a manner that adversely affected how an updated final safety analysis report design function is performed or controlled. Additionally, the licensee determined that the steam generator replacement activity did not involve a test or experiment not described in the updated final safety analysis report. The licensee evaluated the following updated final safety analysis report design functions in the 50.59 screening:

- Steam Generator Design Functions
- Reactor Coolant System Structural Integrity
- Emergency Core Cooling System Performance
- Non-Loss of Coolant Accident Transients
- Containment Pressure-Temperature Analysis
- Low Temperature Overpressure Protection
- Reactor Protection System, Engineered Safety Features Actuation System, Core Operating Limit Supervisory System, and Core Protection Calculations
- Nuclear Steam Supply System Performance
- Non-Safety Related Control Systems Performance

However, the 50.59 screening evaluation identified three methods of analysis described in the updated final safety analysis report that were affected by the proposed steam generator replacement and required further evaluation against the criteria in 10 CFR 50.59. The affected methodologies are described below:

- Seismic Analysis of Reactor Vessel Internals – The original analysis of SONGS Unit 2 and Unit 3 reactor vessel internals with the original steam generators was performed with the methodology described in Combustion Engineering Topical Report CENPD-178, "Structural Analysis of Fuel Assemblies for Combined Seismic and Loss of Coolant Accident." Subsequent to the submittal of this report, Combustion Engineering revised the methodology by modifying modeling techniques, computer codes, testing methods, and acceptance criteria in response to changes in licensing requirements. Consequently, the original report was resubmitted to the NRC as CENPD-178-P, Revision 1-P, August 1981. This revision was approved by the NRC in a Letter from H. Bernard to A. Scherer, "Acceptance for Referring of Licensing Topical Report CENPD-178," dated August 6, 1982. The licensee used this revised methodology for the replacement steam generators and considered it as a methodology approved by the NRC for the intended application.

- Reactor Coolant System Structural Integrity – The structural analysis of the original steam generators used ANSYS software for the thermal and stress analyses while the replacement steam generators were analyzed using ABAQUS software. ANSYS was described in the updated final safety analysis report as a large-scale, general-purpose, finite element program for linear and nonlinear structural and thermal analysis of the reactor coolant loop components. The licensee considered ABAQUS to be similar to ANSYS. The licensee compared both programs using thermal and stress sample problems. The comparison demonstrated that the results varied from theoretical solutions by no more than 1 percent, and ABAQUS and ANSYS results themselves were also within 1 percent of each other. The variability of results was determined to be within the margin of error for the subject type of analysis.

- Tube Wall Thinning Analysis – The original steam generator analysis used CEFLASH computer program for the main steam line break mass-energy blowdown analysis, whereas the replacement steam generator analysis used manual calculations to represent the main steam line break blowdown loads by applying the maximum possible tube differential pressure, which bounded the pressure calculated by CEFLASH.

  For loss of coolant accident analysis, the original steam generator used STRUDL computer program to calculate displacement histories and then ANSYS computer program to calculate tube stresses. The tube stresses for the replacement steam generators were determined using ANSYS computer program based on the blowdown forces. For the original steam generators the combination of loads analyzed was primary loop pipe break plus design basis earthquake and main steam line break plus design basis earthquake. For the replacement steam generators, the loss of coolant accident, design basis earthquake, and the main steam line break events were combined as one limiting event, which SCE considered to be a more conservative method of evaluation relative to the original steam generators. The licensee determined that the results of the tube wall thinning analysis for the replacement steam generators were conservative or essentially the same and the methodology used did not represent a departure from a method of evaluation described in the updated final safety analysis report.

Further discussion is contained in Section 13.0 of this report on the methodology used by the licensee for the reactor coolant system structural integrity and tube wall thinning analysis.

The team noted that a key methodology for the design of the replacement steam generators was the thermal-hydraulic code used to model the flow conditions in the steam generators. Mitsubishi's FIT-III thermal-hydraulic code was accepted by SCE for the design of the replacement steam generators. The team noted that the updated final safety analysis report did not describe the thermal-hydraulic code used for the design of the original steam generators and therefore the use of the FIT-III thermal-hydraulic code did not constitute a change in methodology or a change in an element of a methodology described in the updated final safety analysis report. The updated final safety analysis report did describe the computer code CRIB as the code used to analyze overall steam generator performance. As

described in the updated final safety analysis report, CRIB was used to establish the recirculation ratio and fluid mass inventories as a function of power level in the original steam generators.

With regard to the major design changes between the original and replacement steam generators, the updated final safety analysis report did not specify how the original steam generators relied on special design features such as the stay cylinder, tubesheet, tube support plates, or the shape of the tubes to perform the intended safety functions. The description of the original steam generators was focused on the overall thermal performance characteristics and the applicable codes and standards used for fabrication. The updated final safety analysis report provided a brief description of the egg-crate tube support plate design and its function to prevent concentration of impurities in the tube-to-tube support plate gap, which could lead to tube degradation. The updated final safety analysis report also described degradation issues of the egg-crate tube support plate design as a result of flow-accelerated corrosion and the corrective actions taken to mitigate this degradation mechanism.

Regulatory Guide 1.187, "Guidance for Implementation of 10 CFR 50.59, Changes, Tests, and Experiments," November 2000, allows the use of NEI 96-07, "Guidelines for 10 CFR 50.59 Implementation," Revision 1 for methods that are acceptable for complying with 10 CFR 50.59. Per NEI 96-07, changes affecting structures, systems, or components that are not explicitly described in the updated final safety analysis report can have the potential to adversely affect structure, system, or component design functions that are described and thus may require a 10 CFR 50.59 evaluation. Consistent with this guidance, SCE's 50.59 screening evaluated the differences in subcomponents between the original steam generators and replacement steam generators as to whether the differences adversely affected the design function (reactor coolant pressure boundary) of the steam generators. The replacement steam generators were designed and fabricated in accordance with quality assurance requirements, and 10 CFR 50.59 does not require the licensee to presume deficiencies in the design or fabrication.

c. Conclusions

The team identified two unresolved items. The unresolved item associated with the changes in dimensional control needs to be resolved prior to restart of Unit 3.

The team determined that no significant differences existed in the design requirements of Unit 2 and Unit 3 replacement steam generators.

Based on the updated final safety analysis report description of the original steam generators, the team determined that the steam generators major design changes were reviewed in accordance with the 10 CFR 50.59 requirements. An unresolved item related to a change in a method of evaluation used for the stress analysis calculations is discussed in Section 13 of the report.

## 5.0 Quality Assurance/Quality Control (Charter Item 5) (Mitsubishi Charter Item 4)

The team reviewed numerous documents from both SCE and Mitsubishi (including sub-contractors, such as Sumitomo) associated with the design, fabrication, and manufacturing of the steam generators for both units. The team reviewed SCE and Mitsubishi's quality assurance program, procedures and implementation activities for the control of purchased material, equipment, and services; inspections; procurement document control; and corrective action and nonconformance activities. Specifically, the team reviewed a sample of Mitsubishi nonconformance reports, audit, survey, all SONGS condition action requests, audits, surveillances, stop work orders, and supplier deviation requests associated with the design and manufacturing of the steam generators. The team concluded that these portions of SCE and Mitsubishi's quality assurance program regarding its safety-related activities were appropriately controlled and implemented.

## 5.1 SONGS Quality Assurance/Quality Control

### a. Inspection Scope

The team reviewed SCE's implementation of their quality assurance program to determine if it complied with the requirements of 10 CFR 50, Appendix B, "Quality Assurance Criteria for Nuclear Power Plants and Fuel Reprocessing Plants." The team reviewed SONGS implementing procedures, quality assurance manual, vendor audits, procurement specifications, corrective action requests, and numerous other documents, as well as interviewed a number of quality assurance/control and engineering personnel to determine the appropriateness of activities affecting quality conducted during fabrication, manufacturing and delivery of the replacement steam generators.

### b. Observations and Findings

No findings were identified.

#### (1) Policies and Procedures for Supplier Selection and Control

The team reviewed Quality Assurance Manual, Section 17.2.7, "Control of Purchased Material and Services," which defines the process used to ensure that purchased material, source material, and subcontracted services conform to applicable codes and standards. Section 17.2.7.2 of the quality assurance manual provided measures for the approval and control of suppliers and describes the methods that SCE uses to conduct technical and quality assurance evaluations of potential suppliers. Specifically, SCE evaluated an audit performed by Dominion (DA 2002-92, "Dominion Audit of Mitsubishi Heavy Industries"). The evaluation was performed and documented in accordance with SONGS policies and implementing procedures that govern the control of purchased material, equipment, and services. The results of SCE Evaluation MHI-01-04, "Evaluation and Review of Contractor, Consultant, Utility or Licensee Audit Report," stated that Mitsubishi was conditionally qualified for the fabrication and design of the replacement steam generators. An audit was performed by SCE when a sufficient quantity of work had been performed to demonstrate implementation of Mitsubishi's quality assurance program. Southern

California Edison-'s oversight of Mitsubishi also included verification of Mitsubishi's activities during fabrication, inspections, testing and shipment of the procured item. After approximately 14 months from the initial evaluation SCE removed the conditional qualification based on results from Evaluation MHI-10SV-05, "Source Evaluation Report of MHI," dated February 8, 2006, and MHI-3SV-06, "Source Verification Report of MHI," dated May 3 2006, and implementation and verification of specific corrective actions. Part of the SONGS oversight plan of Mitsubishi included the placement of SCE quality assurance/quality control personnel (residents) at the Mitsubishi facility. Plan SGR-A10183, "Replacement Steam Generator Resident Oversight Plan," described the roles and responsibilities of the resident management, engineering, and quality oversight implementation strategy for the replacement steam generators. This oversight plan was created to provide reasonable assurance that the design, licensing, fabrication, delivery, and acceptance of the SONGS replacement steam generators were performed in accordance with specified SCE, industry, regulatory, and Code requirements. The team noted that after the resident was placed at Mitsubishi, Source Verifications and Surveillances performed by SCE decreased. After the NRC team conducted several interviews with the SCE personnel responsible for oversight of Mitsubishi it was determined that the resident provided adequate oversight of Mitsubishi's activities. Nuclear Oversight Division Project Oversight Quarterly Reports were provided by SCE that demonstrated no decrease in SCE oversight of Mitsubishi. These responsibilities were shifted to the resident at Mitsubishi. During the review of the documentation generated by the resident the NRC team noted that the resident was performing these activities on behalf of SCE.

(2) Purchase Order Review

The team reviewed purchase order 6C294014 from Edison Material Supply LLC, issued September 28, 2004, for the design, fabrication, and delivery of four replacement steam generators for SONGS Units 2 and 3. The procurement order stated that all related work was to be performed in accordance with Specification SO23-617-01, "Specifications for Design and Fabrication of RSG for Units 2 and Unit 3." Specification SO23-617-01 identified the codes, standards, regulations and other documents applicable to the design, fabrication, and delivery of the replacement steam generators. For example Specification SO23-617-01 invoked American Society of Mechanical Engineers Boiler and Pressure Vessel Code, American National Standards, American Society for Testing and Materials Standards, and Electric Power Research Institute Technical Report 016743-V2R1, "Guidelines for PWR Steam Generator Tubing Specifications and Repair," among others.

(3) Supplier Audit and Surveillance Reports

The team reviewed a sample of audits and surveillances performed on Mitsubishi to verify SCE's approval process of Mitsubishi and subcontracted services. The team noted that the audits and annual assessments reviewed were adequately documented and provided evidence of Mitsubishi's compliance with quality assurance requirements. The team also verified that audit reports supported the conclusions made by SCE.

5.2 Mitsubishi Quality Assurance/Quality Control

a. Inspection Scope

The team reviewed Mitsubishi implementation of their quality assurance program to determine if it complied with the requirements of 10 CFR 50, Appendix B, "Quality Assurance Criteria for Nuclear Power Plants and Fuel Reprocessing Plants." The team also reviewed a sample of reports from audits and surveys that Mitsubishi conducted of various subcontractors, such as Sumitomo to determine the adequacy of oversight provided by Mitsubishi activities affecting quality and that contracted activities were implemented in accordance with the Mitsubishi-approved quality assurance program. In addition, the team reviewed Mitsubishi's Approved Suppliers List to verify that vendors listed were qualified according to Mitsubishi's specifications and that the list was maintained current.

b. Observations and Findings

No findings were identified.

(1) Policies and Procedures for Supplier Selection and Control

The team reviewed Mitsubishi Quality Assurance Manual, Section 4, "Procurement Control," of the which defines the process used to ensure that purchased material, source material, and subcontracted services conform to the applicable requirements of the American Society of Mechanical Engineers Code and to customer procurement documents. Section 4.4 of the Quality Assurance Manual provided measures for the approval and control of suppliers and described the process that Mitsubishi used to conduct surveys or audits, as required. Additionally, Section 4.4 provided guidance for the preparation of purchase specifications and subcontract specifications, including the imposition of regulatory requirements for the American Society of Mechanical Engineers Code, Section III products.

The team reviewed Procedure BUH94-06, "Vendor Evaluation Procedure," which provided guidance on the evaluation of the quality control capability of suppliers by performing surveys, audits and performance evaluations of the supplier quality assurance program. Procedure BUH94-06 provided a detailed description of the entire process to be followed by auditors before, during and after a survey/audit was performed.

No issues were identified.

(2) Supplier Audit and Surveillance Reports

The team reviewed a sample of external audits and surveys to verify Mitsubishi's approval process of Sumitomo Metal Industries, Limited, Steel Tube Works and Sumitomo Metal Industries, Limited, Pipe & Tube Company Wakayama Steel Works. The team noted that the audits and annual assessments reviewed were adequately documented and provided evidence of each company's compliance with quality

assurance program requirements. The team also verified that audit checklists were prepared and completed for the audit and contained sufficient objective evidence to support the conclusions made by Mitsubishi.

During the review, the team learned that as a consequence of nonconformance report UHNR-SON-RSG-06N005 related to inadequate lot control during final mill annealing of the tubing, Mitsubishi issued a stop work order to Sumitomo. As part of their process Mitsubishi visited Sumitomo to find the root cause of the nonconformance. After a review of Sumitomo's corrective action, Mitsubishi was able to confirm the adequacy of the corrective actions and preventive actions. Mitsubishi released Stop Work Order UHH-G06A097 imposed on Sumitomo.

On May 8, 2007, Mitsubishi performed Special Audit UHQ-07N004, on Sumitomo, in order to confirm adequacy of activities based on Sumitomo Corrective Action Plan UHCP-07N004. During the audit Mitsubishi found two findings and made one recommendation. Both findings required corrective action from Sumitomo. The Mitsubishi audit indicated that Sumitomo was not able to perform adequate activities for manufacturing heat transfer tubing in accordance with Sumitomo's shop manual. The causes of the deficiencies identified during the audit were a result of Sumitomo's staff failing to follow the shop manual requirements. Because the two findings were related to the stop work order, Mitsubishi did not allow Sumitomo to start manufacturing activities until adequate implementation of corrective actions were confirmed by Mitsubishi. On June 21, 2007, Mitsubishi verified Sumitomo implementation of the corrective actions. During this visit at Sumitomo, Mitsubishi verified the operations involving straight tube fabrication prior to tube bending operations were performed in accordance with Sumitomo's shop manual. Mitsubishi found that the same type of corrective actions taken by Sumitomo for straight tube fabrication operations applied to tube bending operations. During the review of the implementation of the corrective actions Mitsubishi could not verify acceptability of Sumitomo tube fabrication operations for the tube bending process. Mitsubishi allowed Sumitomo to restart operation only for the straight tube fabrication. On July 13, 2007, Mitsubishi subsequently confirmed the adequacy of Sumitomo corrective actions on tube bending processes. Mitsubishi verified that the bending operations followed the requirement of the Sumitomo' shop manual. On July 17, 2007, Mitsubishi lifted the restrictions imposed on Sumitomo and they were allowed to restart operations.

No issues were identified.

(3) Maintenance of the Approved Supplier List

The team reviewed Mitsubishi Quality Assurance Manual Section 4, "Procurement Control," which defined the controls for the maintenance, distribution, and update of Qualified Vendor List UES-20100006. According to Section 4, the Nuclear Plant Quality Assurance Section had the responsibility for preparing, approving, and distributing the qualified vendor list and any subsequent revisions. In addition, a review by the quality assurance engineer was required prior to final document approval. Mitsubishi was informed of changes to their supplier's quality assurance manuals through procurement requirements imposed on the suppliers on their

certificate of qualification as an approved vendor. If the vendor did not maintain their quality assurance program, they were removed from the qualified vendor list. Prior to issuing a Quality Assurance Manual revision, approved vendors were required to send a copy to Mitsubishi for review and approval, after which Mitsubishi updated the qualified vendor list with the latest revision number and date.

No issues were identified.

5.3 Quality Assurance Conclusion

The team concluded that the quality assurance program requirements for quality activities to support the replacement steam generator project were consistent with the requirements of 10 CFR Part 50, Appendix B. The team also concluded that SCE's and Mitsubishi's quality assurance program requirements were appropriately translated into implementing procedures to support the replacement steam generator project.

6.0 Implementation of Steam Generator Industry Information (Charter Item 6) (Mitsubishi Charter Item 3)

a. Inspection Scope

The team reviewed procurement documentation, Mitsubishi design documentation, and the 10 CFR 50.59 review package to assess SCE's and Mitsubishi's consideration and implementation (as appropriate) of operating experience as part of the steam generator replacement project, and in the steam generator tube inspections conducted during the current outages for SONGS Units 2 and 3. The team interviewed various personnel with respect to operating experience considerations relating to major design changes incorporated into the replacement steam generators. The team reviewed operating experience in NRC generic communications and worldwide plant operating experience that might potentially be relevant to conditions observed at SONGS.

b. Observations and Findings

No findings were identified.

The original steam generators installed throughout the domestic fleet of pressurized water reactors, including SONGS, experienced widespread corrosion of the tubes and tube support plates, stress corrosion cracking of the tubes, and wear at tube supports. These problems led to the replacement of nearly all of the original steam generators, in most cases well before the end of their design lifetime. For SONGS, the design of the replacement steam generators included a number of design changes to correct life limiting problems with the original steam generators, based in part on consideration of SONGS-specific and industry-wide operating experience. This included use of more corrosion resistant materials for the tubing and tube support plates to mitigate corrosion and stress corrosion cracking issues experienced in the past. The licensee's bid specification required that the stay cylinder feature of the original steam generators be eliminated to maximize the number of tubes that could be installed in the replacement steam generators and to mitigate past problems with tube wear at tube supports caused by relatively cool water and high flow velocities in the central part of the tube bundle.

Mitsubishi employed a broached trefoil tube support plates instead of the egg crate supports in the original design. In addition to providing for better control of tube to support plate gaps and easier assembly, the broached tube support plates were intended to address past problems with the egg crate supports by providing less line of contact and faster flow between the tubes and support plates, reducing the potential for deposit buildup and corrosion. Mitsubishi selected a u-bend configuration for the upper part of the tube bundle instead of the square bend design of the original steam generators based on its experience that u-bends were easier to fabricate and support and were easier to inspect.

The team's review of Mitsubishi design documentation for the anti-vibration bars indicates that Mitsubishi considered wear in the u-bend region as the most important issue affecting the anti-vibration bar design. Mitsubishi reviewed operating experience regarding wear in the u-bend region of replacement steam generators and trended the experience data as a function of steam generator manufacturer, tube packing arrangements (tube pitch, square versus triangular arrays), and steam generator size. The SONGS steam generators are relatively large, and Mitsubishi acknowledged that this and the tight tube packing geometry could affect wear experience. Mitsubishi stated that the SONGS replacement steam generator were designed to minimize these concerns by providing more support points with shorter spans in the u-bend region along with effective zero gaps between the tubes and anti-vibration bars during steam generator operation. Mitsubishi manufacturing was designed on achieving very small uniform gaps between the tubes and anti-vibration bars during assembly.

Engineering Change Package NECP 800071703 for the replacement steam generators evaluated industry operating experience as it related to the manufacture and operation of the replacement steam generators. Several of these experiences related to fabrication issues, lack of weld quality, material defects, loose parts, lack of cleanliness, and failure to fully expand tubes in the tubesheet. The licensee found most of these issues to be applicable to the replacement steam generators at SONGS, but that these kinds of issues would be adequately addressed by the supplier's (typically Mitsubishi) augmented quality assurance procedures and continuous quality oversight by the licensee. The licensee also cited augmented receipt inspections, in-process verifications, foreign material exclusion and control, and cleanliness inspections on the part of the supplier or the licensee, as applicable, as addressing these issues.

The licensee addressed industry operating experiences relating to stress corrosion cracking of steam generator tubing by noting that the Alloy 690 thermally treated tubing in the replacement steam generators were expected to be substantially more resistant to stress corrosion cracking than the tubing alloys used in earlier model steam generators. The licensee also addressed experience at another unit which experienced tie rod and consequential tube bow as a result of differential thermal expansion between the tubes and shroud and unexpected interference between some tube support plates. The stay rod (equivalent to tie rods at other unit) and shroud material for the replacement steam generators have been selected to have similar coefficients of thermal expansion which would preclude a similar problem.

Steam Generator Degradation Assessment 51-9176667-001 (prepared by AREVA) supporting steam generator inspections during the current outages for Units 2 and 3

evaluated industry operating experience relating to steam generator in-service inspections. This included operating experience reports, including NRC Information Notice 2010-05, "Management Of Steam Generator Loose Parts And Automated Eddy Current Data Analysis," relating to eddy current test probe issues and data analysis errors. In response to these issues, SCE personnel stated that specific training was given to the data analysts at SONGS on the lessons learned from these experiences and where applicable, appropriate data was included in the SONGS site specific performance demonstration. The licensee also described additional measures that would be taken at SONGS to address these issues. The review also addressed operating experience reports dealing with unexpected tube support indications or lack thereof. In response, SCE stated that indicated anti-vibration bar locations by eddy current will be compared to the anti-vibration bar locations specified in the Mitsubishi design drawings.

Steam Generator Degradation Assessment 51-9176667-001 also addressed numerous operating experience reports involving loose parts and foreign objects in steam generators, including several instances involving resultant damage to steam generator tubing. These reports included NRC Information Notices 2004-10, "Loose Parts in Steam Generators," 2004-16, "Tube Leakage Due to a Fabrication Flaw in a Replacement Steam Generator," and 2004-17, "Loose Part Detection and Computerized Eddy Current Analysis in Steam Generators." Some of these reports dealt with eddy current probes, or pieces of probes, which were left behind as loose parts on the primary side. Most of the operating experience reports related to lose parts and foreign objects on the steam generator secondary side. In response, SCE approach for addressing this issue was through procedure changes and secondary side visual inspections which included the open tube lane, the entire peripheral annulus, and appropriate visual examination followup on eddy current indications of possible loose parts. The inspection with the exception of the loose parts component was performed, as scheduled, during the current refueling outage for SONGS Unit 2. The inspection for loose parts will be performed at the first scheduled inspection during the next refueling outage. The team noted that possible loose parts indications were not found during the 100 percent eddy current test inspection of the Unit 3 steam generators during the current outage. The team also noted that secondary side visual inspections were performed in the upper bundle area of the Unit 3 steam generators to evaluate the tube-to-retainer bar intersections and in a limited area above the 7th tube support plate.

The NRC staff issued many generic communications relating to steam generator tube integrity issues since the 1980s. The team reviewed these documents and determined that many of these related to the potential for stress corrosion cracking of the tubes which the staff found was not expected to be a concern for the thermally treated Alloy 690 material in the SONGS replacement steam generators by virtue of its greatly enhanced resistance to stress corrosion cracking. Most of the others related to problems encountered with eddy current flaw detection and sizing, the occurrence and detection of loose parts/foreign objects, and monitoring of primary to secondary leakage.

The team reviewed NRC generic communications not falling into one of the above categories for potential relevance to SONGS Unit 2 and 3. One of these was NRC Information Notice 2004-16 concerning an operational leakage event at another plant due to damage caused by a packing screw during transport to the steam generator

manufacturer. The licensee stated in its steam generator change package that this incident was precluded for SCE by prohibiting the use of screws and nails as fasteners for tubing shipping crates. The licensee also addressed NRC Information Notice 2007 37, "Buildup of Deposits in Steam Generator," concerning fatigue of a low row u-bend at a foreign unit as a result of deposit build up and lack of support for the low row u-bend. Engineering Change Package NECP 800071703 specified that this type of incident was precluded in the replacement steam generators by virtue of anti-vibration bar supports extending to the low row u-bends. Steam Generator Degradation Assessment 51-9176667-001 documented that this type of problem reflected an advanced stage of deposit accumulation that was not anticipated for the foreseeable future in the SONGS replacement steam generators.

c. Conclusions

The team's review indicated that lessons learned from these NRC generic communication documents had generally been incorporated into industry guideline documents relating to steam generator inspections, monitoring of primary-to-secondary leakage, and other guidelines documents prepared by the Electrical Power Research Institute. This information was incorporated into SCE's design specifications, inspection and, leakage monitoring guidelines.

7.0 Packing, Shipping, Handling, and Receipt Inspection (Charter Item 7)

a. Inspection Scope

The team interviewed licensee personnel involved with the packing, shipping, handling, and receipt inspection of the replacement steam generators. In addition, the team reviewed SCE receipt acceptance criteria to assess if critical attributes were appropriately specified and if the licensee had the ability to assess acceptability of meeting those acceptance criteria. The team reviewed evaluations associated with supplier deviation reports, nuclear notifications and changes to handling specifications. With respect to replacement steam generators the team focused on differences in SONGS shipping, handling, and receipt acceptance between the Unit 2 and 3 steam generators from the manufacturing site in Japan to final installation on site.

b. Observations and Findings

No findings were identified.

The team identified three unresolved items for which additional information is required to determine if performance deficiencies exist or if the issues constitute violations of NRC requirements.

(1) Introduction: The team identified an unresolved item associated with Unit 3 steam generators not shipped in accordance with specification SO23-617-01, "Design and Fabrication of Replacement Steam Generators for Unit 2 and Unit 3," Revision 4, and requirements for handling, storage, and shipping. Specifically, ANSI N45.2-1977, "Quality Assurance Program Requirements for Nuclear Facilities," required a special protective environment for handling, storage, and shipping of the replacement steam

generators. However, because of schedule changes, the Unit 3 protective environment which included maintaining a nitrogen pressure and a monitoring plan was altered significantly.

Description: The team evaluated specifications associated with the shipping and handling of the Unit 2 and 3 replacement steam generators. Based on the information evaluated by the team, the steam generators procurement and shipping specifications required monitoring and maintenance of nitrogen atmosphere inside the replacement steam generators during shipment. Supplier Deviation Request SDR 10041870-09091 dated December 1, 2009, documents a request "not to control the positive pressure, the dew point of nitrogen, and the oxygen content on the primary and secondary side of the Unit 3 replacement steam generators to accelerate delivery schedule."

Specification SO23-617-01, Section 3.16.3, specifies the supplier shall be responsible for monitoring and maintaining nitrogen atmosphere inside the steam generators during their shipping from Mitsubishi to the California port discharge point. The team noted that Unit 3 steam generators did not require, monitoring or control of dew point, oxygen concentration, inside nitrogen pressure. The team could not identify if this was properly evaluated (Reference Section 5 of shipping and handling procedure SO23-617-1-M1350).

Additional review and follow up will be required to review the evaluations and corrective actions associated with the maintaining the Unit 3 replacement steam generators protective environment during shipping and then determine whether this issue represents a performance deficiency or constitutes a violation of NRC requirements. This issue is identified as URI 05000362/2012007-05, "Shipping Requirements not in Accordance to Industry Standards."

(2) Introduction: The team identified an unresolved item associated with the shipping and handling specifications requiring methods of tube bundle support. The team could not determine if this requirement to provide a tube bundle support method was adequately evaluated by SCE.

Description: Based on the information gathered by the team on shipping and handling specifications associated with the Unit 2 and 3 replacement steam generators, the team could not determine that Mitsubishi or SCE adequately considered the potential impact of not providing methods of tube bundle supports as required in Specification SO23-617-01. In response to the team questions regarding tube bundle support methods, the team was provided with results from Procedure L5-04GA069, "Sagging Measurement Procedure," Revision 7. However the team noted the procedure is considered a non-quality affecting procedure and used for reference only.

Additional review and follow up will be required to review the evaluations associated with the requirements to provide tube bundle support during shipping for the Unit 2 and 3 steam generators and then determine whether this issue represents a performance deficiency or constitutes a violation of NRC requirements. This issue is

identified as URI 05000362/2012007-06, "Shipping Requirements not in Accordance to Design and Fabrication Specifications."

(3) Introduction: The team identified an unresolved item associated with evaluation of excessive shipping induced forces of Unit 3 replacement steam generator 3E-088.

Description: The team reviewed the SG shipping accelerometer data reports for both Unit 2 and Unit 3. In addition, the team also reviewed shipping and handling records and identified the following:

- Different transoceanic shipping companies and ships were used (U2: Happy Ranger, U3: Enchanter)
- During the discharge from the ship Unit 3 replacement steam generator 3E0-88 (3B) recorded simultaneous signals on the three attached accelerometers
- Unit 3 steam generator 3E0-88 was the only steam generator to record simultaneous signals on the three attached accelerometers
- Unit 3 steam generators received significantly more accelerometers hits compared to Unit 2

Unit 3 replacement steam generator 3E0-88 accelerometers indicated up to a 1.23 g spike with a simultaneous recording on all three of the attached accelerometers. Mitsubishi provided an evaluation of the forces which showed loads were within allowable stress limits but exceeded stress for an operating basis earthquake. The team was not able to determine if this was properly considered.

Additional review by the NRC is required to fully assess if the shipping forces contributed to the tube-to-tube wear in Unit 3 and then determine whether this issue represents a performance deficiency or constitutes a violation of NRC requirements. This issue is identified as URI 05000362/2012007-07, "Unit 3 Steam Generator 3E0-88 Stresses Related to Handling."

c. Conclusions

The team identified three unresolved items related to the shipment of Unit 3 steam generators; however, the team did not identify any connection between these shipping changes and the unexpected tube-to-tube wear.

8.0 Thermal-hydraulic and Flow Induced Vibration Modeling (Charter Item 8)

a. Inspection Scope

The team conducted and overall review of Mitsubishi thermal-hydraulic design documents and drawings used in the manufacture of the Units 2 and 3 steam generators. The team developed an independent ATHOS model to run simulations for various operating conditions to assess thermal-hydraulic phenomena in the steam generators and assess differences in key parameters based on changing operating conditions. The objective of the modeling was to understand the interactions of the key

parameters to compare ATHOS modeling results to the degradation trends found during the eddy current inspections.
The team was not able to perform any independent tube vibration analysis because the NRC does not have the associated vibration software programs. However, since two key outputs of the thermal-hydraulic code are inputs to the vibration model, the ATHOS model results for fluid velocity and void fraction were used to predict increases or decreases in vibration forces and amplitude.

b. Observations and Findings

No findings were identified.

The team identified one unresolved item for which additional information is required to determine if a performance deficiency exists or if the issue constitutes a violation of NRC requirements.

(1) Introduction: The team identified an unresolved item associated with the adequacy of Mitsubishi's FIT-III thermal-hydraulic code. The FIT-III code predicted non-conservative low velocity and low void fraction results which were used as inputs to the vibration code FIVATS. These non-conservative thermal-hydraulic results lead Mitsubishi to conclude that margins to instability were significantly larger than they actually were.

Description: Replacement steam generators were designed and manufactured in accordance with SONGS Design Specification SO23-617-1and ASME Section III, "Rules for Construction of Nuclear Facility Components". The replacement steam generators had enhanced materials and maintenance.

The tube bundle, comprised of 9727 u-tubes, is supported by a set of seven tube support plates which are maintained and spaced by a network of tie-rods. The ends of the u-tubes were welded onto the tube sheet lower face cladding and were full depth expanded in the tube sheet holes. The u-bends are supported by a set of 6 anti-vibration bars, having a maximum of 12 contact points, in the center of the bundle. For shorter tubes near the periphery, a fewer number of anti-vibration bars are present.

One of the major enhancements of the replacement steam generators was the use of Alloy-690 tubing versus Alloy-600 for corrosion resistance. Alloy-690 has lower heat conductivity so, to achieve same power, the heat transfer surface area must be increased by at least 10 percent. This required more tubes to be used in the replacement steam generators. The increased number of tubes resulted in a more tightly compacted tube bundle and elimination of the stay cylinder. The increase in the number of tubes could lead to increases in primary reactor coolant flow through the steam generators. Orifices were installed in the steam generator inlet nozzles to ensure maximum allowed primary system flowrates were not exceeded.

The tube layout indexing or incrementation used in these generators was smaller than other replacement steam generator designs. The tighter indexing results in smaller pitch/diameter ratio in critical regions of the tube bundle u-bends. In addition, it was noted that the anti-vibration bar support structure is not connected to the

wrapper for lateral or vertical support; instead the anti-vibration bar system structure is only supported vertically by resting on the tubes.

Other operational and physical comparisons of the replacement steam generators and original steam generators were reviewed by the team and no significant differences were noted.

Additional review by the NRC is required to fully assess the adequacy of Mitsubishi's FIT-III thermal-hydraulic code and then determine whether this issue represents a performance deficiency or constitutes a violation of NRC requirements. This issue is identified as URI 05000362/2012007-08, "Non-Conservative Thermal-Hydraulic Model Results."

(2) Thermal-Hydraulic and Vibration Assessments

The replacement steam generators thermal hydraulic operation and responses were based on the steam generator design geometric characteristics and operating parameters of the reactor coolant flow and temperature and the secondary feedwater flow and temperature. Calculations were performed for 0 to 100 percent power, beginning-of-life and end-of-life conditions considering limiting tube plugging and fouling. The important actual operating parameters selected for use in the model were saturation pressure, circulation ratio, steam flowrate, tube and shell side pressure drops, water and steam inventories, and global heat transfer coefficient.

Mitsubishi used the SSPC (Steady State Performance Calculation) code to compute these operational parameters, as described in Mitsubishi Document L5-04GA510, "Thermal and Hydraulic Parametric Calculations," Revision 5. The FIT-III code was used to determine thermal-hydraulic fluid flow conditions, with the results described in Mitsubishi Document L5-04GA521, "3D Thermal and Hydraulic Analysis," Revision 3. The FIVATS code was used to compute tube stability ratios that are used to predict tube vibration, with results described in Mitsubishi Document L5-04GA504 "Evaluation of Tube Vibration," Revision 3. In addition, the ABAQUS code was used compute stress and natural vibration frequency, and a code called IVHET was used for tube wear analysis. The key design code for tube bundle design and vibration analysis is thermal-hydraulic code FIT-III since it computes the two key parameters (fluid velocity and density[1]) that are the primary contributors to the onset of fluid-elastic instability, which indicates the potential for excessive tube vibration.

The Mitsubishi acceptance criterion for vibration was to avoid fluid-elastic instability of tube spans by keeping the calculated stability ratios less than 1. Mitsubishi used the approach given in the ASME code Section III, Division 1, Appendix N-1330, "Flow-Induced Vibration of Tubes and Tube Banks," to calculate stability ratios and they also avoided natural frequencies of the tubes similar to the reactor coolant pump dynamic frequencies.

[1] Void fractions and density are inversely proportional.

Design specific flow induced vibration analysis was performed for select U-bend tubes exposed to the greatest vibration risk, generally those with longest unsupported length under most limiting operating condition (lowest steam pressure, end of life design conditions). The phenomenon of fluid-elastic instability of tubes is characterized by cross-flow velocity (for out-of-plane mode) and normal velocity (for in-plane mode) where the local velocities exceed a critical velocity value (given via Conners' Equation[2]). The parameter of local velocity divided by critical velocity is referred to as stability ratio. The accuracy of calculating fluid-elastic instability is limited based on inputs that are best determined by design-specific mockup test data. Mitsubishi did not perform design-specific mockup tests, but used generally accepted test data, and other data based on Mitsubishi test rigs that were not specific to the SONGS replacement steam generator design.

If operating velocities reach this critical value, vibration amplitudes can increase rapidly and fluid-elastic instability forces can lead to rapid pulsation and damaging of tubes. The U-bend region is most susceptible because (1) the local fluid has a higher void fraction, with high velocities; (2) the fluid flow is in a direction normal to the tube, and (3) the anti-vibration bars are limited in their dampening capability along the plane of the tubes. Traditional design of anti-vibration bar systems have not considered in-plane fluid forces since it was accepted that the rigidity and dampening strength of the tube in this direction was adequate to preclude it. This event at SONGS is the first US operating fleet experience of in-plane fluid-elastic instability, sufficient to cause tube-to-tube contact and wear in the U-bend region.

The team noted that Design Specification SO23-617-1 did not address specific criteria for stability ratio and does not mention fluid-elastic instability. The team did find that the Mitsubishi calculated design values for stability ratios did not exceed 0.5. It is important to note, that each steam generator manufacturer has different design values for maximum stability ratios; therefore there is no standard value. The smaller that the design stability ratio is (has to be less than 1), the more margin to fluid-elastic instability.

Mitsubishi computed the flow-induced vibration status of the steam generators in Document L5-04GA504, "Evaluation of Tube Vibration," Revision 3. The critical flow velocity, Uc, was obtained using the Connors' Equation based on output fluid velocities and densities from their FIT-III thermal-hydraulic model. The critical flow velocity is then calculated based on damping ratio, tube mass, tube outside diameter, averaged local cross flow gap velocity, and fluid density per selected tube. The method is based on formulations given in the ASME code Section III, Division 1, Appendix N-1330, "Fluid Elastic Instability". The ratio of normal-to-tube cross flow gap velocity to this critical velocity defines the "stability ratio".

Steam generator vendors must develop specific methods based on the thermal-hydraulic code selected and experimental data used to determine coefficients in the Conners' Equation for their particular steam generator design. The experimental data used justify the methods can be developed from in-house tests or taken from

---

[2] Fluidelastic Vibration of Heat Exchanger Tube Arrays, Journal of Mechanical design – Volume 100 – April 1978, H.J. Connors, JR.

published industry data. Mitsubishi indicated that in their methodology two conservatisms were used in their bundle vibration analysis: (1) FIT-III gap velocities were averaged and multiplied by 1.5 and (2) one of 12 anti-vibration bars contacts were assumed to be inactive. The team noted that in Mitsubishi Document L5-04GA504, "Evaluation of Tube Vibration," Revision 3, the 1.5 multiplier was not an added conservatism but a requirement, needed to match test data results.

The team developed an independent model of the new steam generators using the ATHOS thermal hydraulic code[3]. The calculations were intended to assess operating cycle differences between Units 2 and 3 steam generators and review thermal hydraulic phenomena within the steam generators in order to investigate key parameters and causal factors for the excessive tube wear rates. The NRC ATHOS calculations determined that the differences in primary inlet temperature and steam flow between the units were negligible. NRC ATHOS results indicated high void fractions and high u-bend gap velocities existed in the bundle as compared to Mitsubishi FIT-III analyses used for design.

Mitsubishi provided a comparison of their ATHOS model to their FIT-III model results. The Mitsubishi ATHOS model fluid velocities were approximately 3 times higher than the FIT-III model velocities with the 1.5 multiplier applied. Other independent code calculations, including an analysis by Westinghouse using their in-house modified version of ATHOS and an analysis by AREVA using their French code CAFCA4 showed similar thermal-hydraulic results (up to 4 times higher velocities than FIT-III) as those computed in the Mitsubishi ATHOS results and the NRC independent ATHOS calculations. Based on these comparisons, it was concluded that the FIT-III code and model results used for design were non-conservative even with the multiplier applied.

Most of the experimental work in fluid-elastic instability has been carried out for two-phase flow, with an air-water medium. Accepted industry data, as presented by the Mitsubishi, shows that in staggered array bundles (triangular pitch, pitch/diameter =1.33), the onset of tube instability for modern steam generators, such as SONGS steam generators, can start at tube gap velocities above 6 meter/sec (pending effectiveness of the dampening structure)[4]. The NRC ATHOS model results indicated that there was a substantial localized region in the lower hot side of the u-bends where velocities exceeded 6 m/sec.

The NRC ATHOS calculations were compared to gap velocities computed both with the Mitsubishi ATHOS and the FIT-III models. Since tube R142C88 was the only one common for each of the analyses, it can be used as basis for comparison. The effective peak velocities were as follows:

- NRC ATHOS – 5.2 m/sec
- Mitsubishi ATHOS – 5.6 m/sec

---

[3] ATHOS/SGAP Version 3.1: Analysis of the Thermal-Hydraulics of a Steam Generator, 2008

[4] R. Voilette, M. J. Pettigrew, N. W. Mureithi, "Fluidelastic Instability of an Array of Tubes Preferentially Flexible in the Flow Direction Subjected to Two-Phase Cross Flow," Trans. ASME, Journal of Pressure Vessel Technology, 128, 148 (2006).

- Mitsubishi FIT-III – 2.5 m/sec

Both the NRC and Mitsubishi ATHOS results were reasonably consistent and strongly suggested that high velocities coupled with high void fraction were primary causal factors in the tube fluid-elastic instability and the excessive wear patterns observed in the Unit 3 steam generators.

The team reviewed the verification and validation of both the Mitsubishi FIT-III thermal-hydraulic and FIVATS tube vibration models as stated in Specification SO23-617-1, Revision 4. The specification required Mitsubishi to design and build the steam generators in accordance with ASME NQA-1, "Quality Assurance Requirements for Nuclear Facility Applications," 1994, Subpart 2.7 "Computer Software" and Mitsubishi's quality assurance program.

The team reviewed Mitsubishi's verification and validation Report KAS-20050201, "FIT-III Code Validation Report," Revision 2. The report concluded the FIT-III code was valid for prediction of velocity and density behavior of two-phase flow under nominal conditions for the secondary side of PWR steam generators.

The team reviewed Mitsubishi's verification and validation Report KAS-20040253, "FIVATS Code Validation and Qualification Report," Revision 3. The FIVATS model was designed to calculate the stability ratios by using the flow velocity and density distributions from the FIT-III model. The FIVATS model primarily used the Conners' Equation, and validation was performed mainly by comparison to hand calculation; however, Mitsubishi used a mock-up test facility with a simple anti-vibration bar structure as part of their validation effort. The report concluded that adequate validation and qualification was performed to show compliance to software requirements and that the code could predict flow-induced vibration.

The team requested additional information as part of the verification and validation of the FIT-III thermal-hydraulic model. Mitsubishi provided several additional reports. One of the reports showed benchmarking comparisons to a French test facility program called CLOTAIRE in 1986. Another report conducted in 2002, showed comparisons between FIT-III and ATHOS, and concluded that both codes had good correlation with the CLOTAIRE experimental data. Because of the limited information provided, the team could not determine the validity of the benchmarking of FIT-III.

Overall, the team determined that the validation and verification of the FIT-III code did not present overwhelming evidence that this code has been adequately benchmarked. The team did not find any problems with the validation of the FIVATS code.

(3) NRC ATHOS Results

Figures 1 through 4 (different view angles of same results) show results, with low $T_{hot}$ and low steam pressure and present a 3D isometric encapsulation of steam qualities (red scale) at and above 0.9 (i.e., void fraction > 0.99) and field velocities at and above 6.0 m/sec (white scale).

The ATHOS model results of high steam quality and steam velocity closely align with the area of concern (tube-to-tube wear) in the Unit 3 replacement steam generators. In Figure 5, the code predicted regions of high void fraction and high steam velocities (vertically located z-axis cut at about 20 inches above the 7th TSP) are superimposed with tube-to-tube wear indications from Unit 3 steam generator 3E0-88.

The tube-to-tube wear indications align with anti-vibration bar wear indication trends; however, the anti-vibration bar wear patterns appear to indicate a more square-like, essentially rectangular behavior that suggests that there may also be a mechanical, fabrication, assembly, and/or material contribution to the tube-to-tube wear degradation.

**Figure 1**

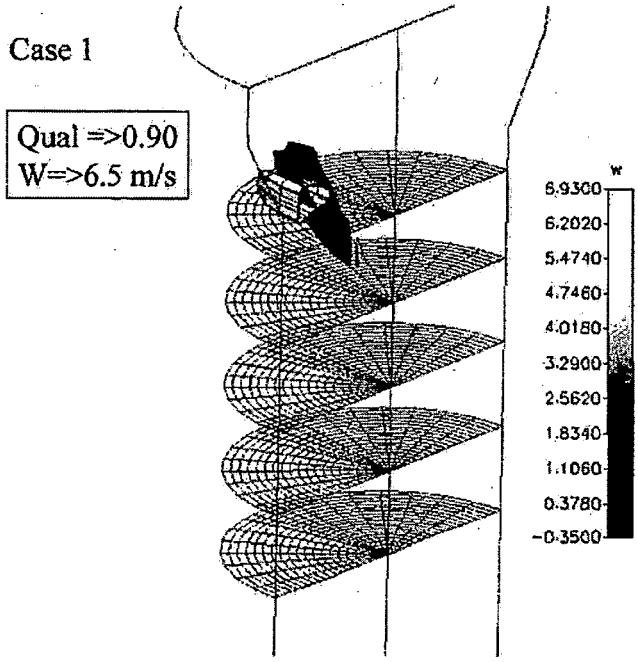

**Figure 2**

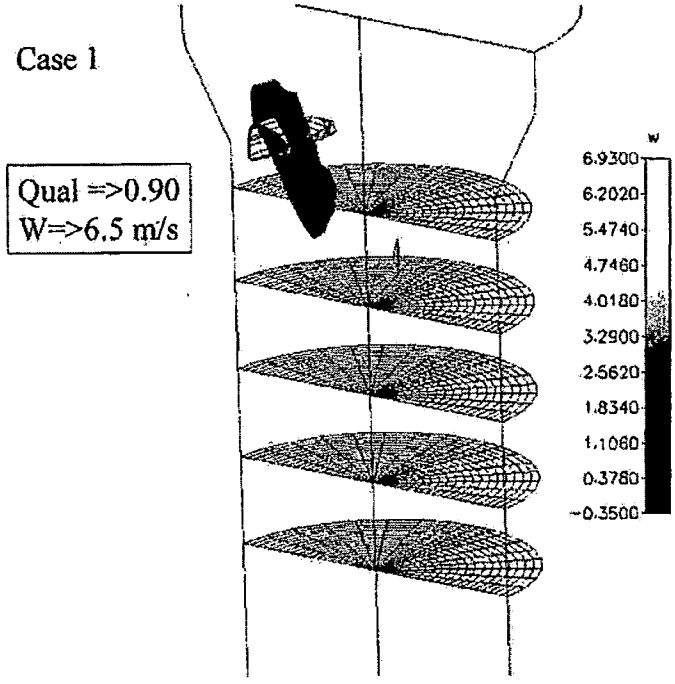


**Figure 3**

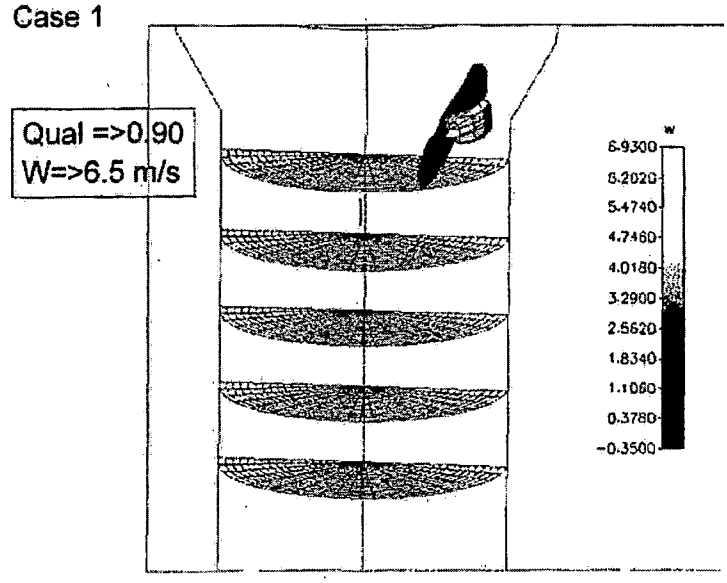

**Figure 4**

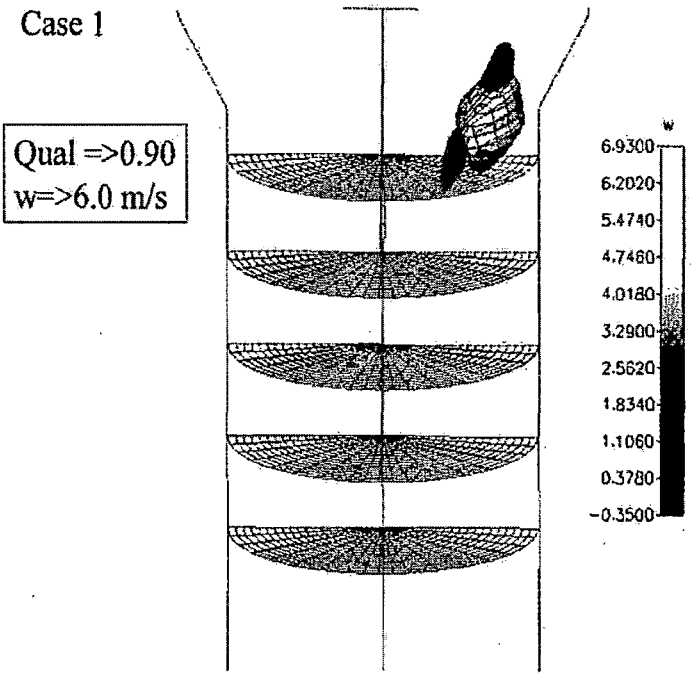
Case 1
Qual =>0.90
w=>6.0 m/s
w
6.9300
6.2020
5.4740
4.7460
4.0180
3.2900
2.5620
1.8340
1.1060
0.3780
-0.3500

**Figure 5**

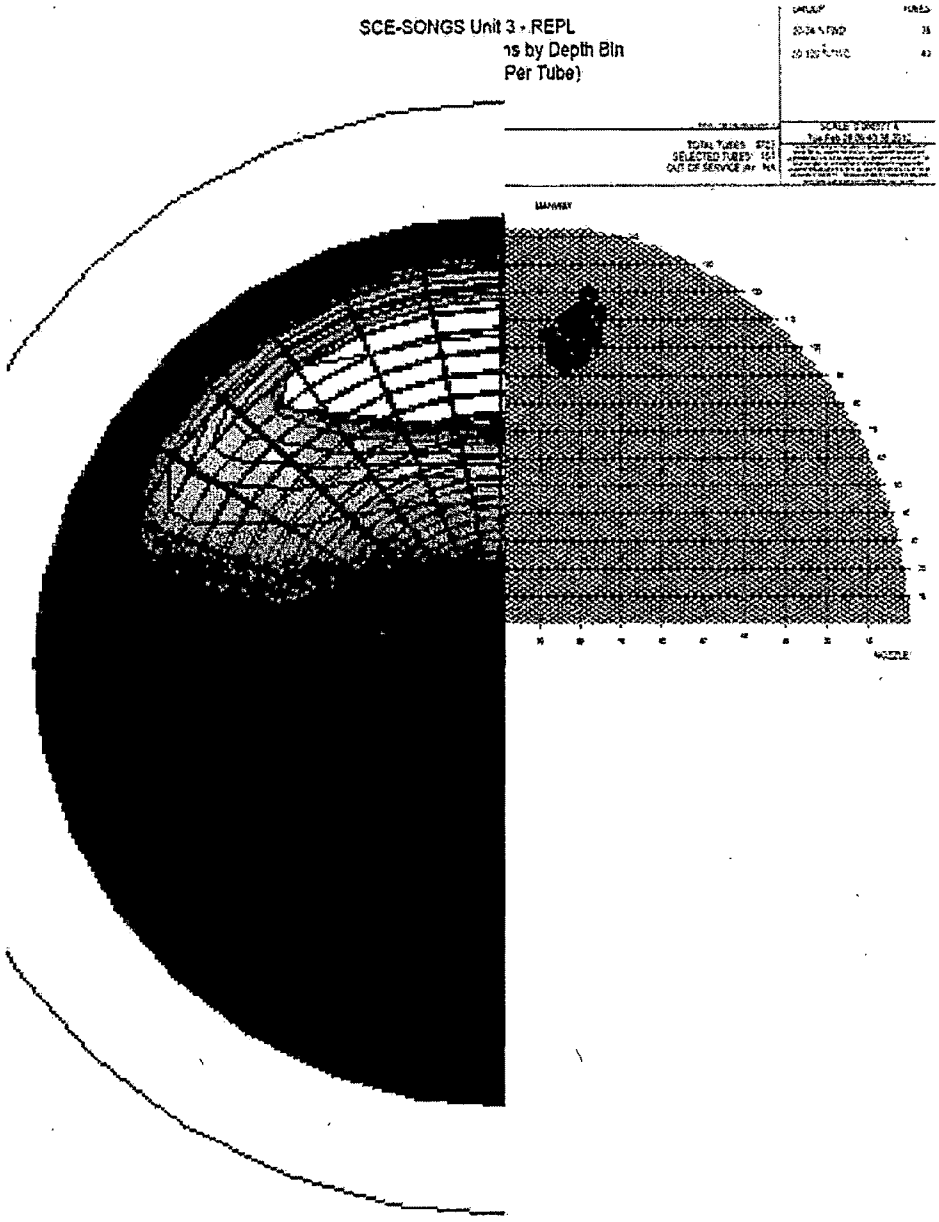


The NRC analysis indicated a correlation with the tube-to-tube wear based on a combination of high void fraction and high steam velocities. It should be noted that the traditional forcing function, fluid velocity squared times density, does not show good agreement with the tube-to-tube wear patterns. This indicated that the high quality steam fluid velocities and high void fraction may be sufficiently high to cause conditions in the generators conducive for onset of fluid-elastic instability.

The above analyses apply equally to Units 2 and 3, so it does not explain why the accelerated fluid-elastic instability wear damage was significantly greater in Unit 3 steam generators. The ATHOS thermal-hydraulic model predicts bulk fluid behavior based on first principals and empirical correlations and as a result it is not able to evaluate mechanical, fabrication, or structural material differences or other phenomena that may be unique to each steam generator. Therefore this analysis cannot account for these mechanical factors and differences which could very likely also be contributing to the tube degradation.

c. Conclusion

The team identified one unresolved item associated with the non-conservative FIT-III thermal-hydraulic model results.

Based on independent NRC thermal-hydraulic analysis, the team concluded that the SONGS replacement steam generators were not designed with adequate margin to preclude the onset of fluid-elastic instability. Therefore unless changes are made to the operation or configuration of the steam generators, high fluid velocities and high void fractions in localized regions in the u-bend will continue to cause excessive tube wear and accelerated wear that could result in tube leakage and/or tube rupture. The deficiencies appear to be related to Mitsubishi's FIT-III thermal hydraulic code having predicted non-conservative low velocity results and low void fractions. These results lead Mitsubishi to conclude that margins to instability were significantly larger than they actually are. This assessment is based on eddy current data, NRC ATHOS analysis, Mitsubishi ATHOS analysis, and other thermal-hydraulic analyses completed by Westinghouse and AREVA that all identified significantly higher fluid velocities and void fractions than FIT-III.

Based on the cause evaluation and corrective action plan, SCE determined that the best solution to prevent tube-to-tube wear was to conservatively plug and stabilize the affected areas. By taking the impacted tubes out-of-service, SCE determined that this should reduce the potential for localized fluid velocities reaching critical velocity. In addition, in order to ensure sufficient margin to preclude the onset of fluid-elastic instability, SCE determined that reactor power would also have to be reduced. At this time SCE is still developing additional corrective actions to prevent tube-to-tube wear. The actions have not been finalized and no determination has been made concerning the appropriate power level. The NRC has not made any conclusions on the proposed corrective actions. Once the corrective actions have been finalized, they will be reviewed and evaluated as part of the Confirmatory Action Letter followup inspection.

9.0 Risk Assessment (Charter Item 9)

a. Inspection Scope

The team reviewed the steam generator tube leak and failures of multiple steam generator tubes during in-situ pressure testing to support an assessment of the risk of the degraded steam generator tubes during various accident conditions, including a main steam line break accident.

b. Observations and Findings

No findings were identified.

An NRC senior reactor analyst is currently working with SCE risk assessment personnel to determine the risk associated with the loss of tube integrity for multiple tubes.

10.0 Assess Quality Assurance, Radiological Controls, and Safety Culture Components (Charter Item 10)

a. Inspection Scope

The team reviewed the event, operator actions, management decisions, steam generator eddy current examinations, in-situ pressure testing, and tube plugging and stabilization activities to determine whether issues related to quality assurance, radiological controls, or safety culture existed.

b. Observations and Findings

No findings were identified.

Region IV radiation protection inspectors reviewed the estimated offsite radiation exposure from the actual steam generator tube leak on Unit 3 steam generator 3E0-88 that occurred on January 31, 2012, including the potential dose consequence to site workers and members of the public. The licensee determined that the Unit 3 steam generator tube leak resulted in a release of gaseous effluents into the public domain, and the primary radionuclides released were argon-41, xenon-133, and xenon-135. The release resulted in an estimated 0.0000452 (4.52 E-5) mrem dose to the public. Inspectors also reviewed design drawings and radiation monitor data, performed plants tours, and confirmed the licensee's use of the offsite dose calculation methodology. The inspectors concluded that the Unit 3 steam generator tube leak was detected by the condenser steam jet air ejector radiation monitor 3RT-7820 as per design. In addition, the radiation monitor 3RT-7820 alarmed and alerted SONGS operators of the steam generator tube leak as required.

c. Conclusions

The radiation protection inspectors concluded that SCE appropriately accounted for the unplanned release associated with the Unit 3 steam generator tube leak.

11.0 Operational impacts from Unit 3 to Unit 2 (Charter Item 11)

a. Inspection Scope

As follow-on of the previous sections, the team reviewed collections of the Mitsubishi documents and presentations, licensee documents and presentations, and NRC independent analysis and assessments to consider the operational impact on Unit 2 based on analysis and data, including eddy current results, regarding the as-found condition of Unit 3. The team compared key observations and overall differences in operational parameters that are common to both units that could affect and possibly limit Unit 2 operation. The team focused on differences in fabrication, manufacturing, operation, and eddy current data results between Units 2 and 3 steam generators.

b. Observations and Findings

No findings were identified.

Since generator physical dimensions and design are identical, the operational parameters are basically the same between the Unit 2 and 3 steam generators; therefore, the hydraulic forcing function that caused tube-to-tube wear and accelerated anti-vibration bar and tube support plate wear should also be same. The initial inspections of the Unit 2 steam generators did not indicate significant wear except at the retainer bars (different mechanism caused this wear). However, subsequent follow up inspections in Unit 2 with a more sensitive probe confirmed the existence of minor tube-to-tube wear in two neighboring tubes but in one of the steam generators. The tube-to-tube wear that was found in Unit 2 was in a similar location as that found in both of the Unit 3 steam generators.

The phenomenon of fluid-elastic instability is a function primarily of two criteria: the fluid velocity forces and the damping capability of the support structure (i.e., the tube support plates, the tubesheet, and the anti-vibration bars). Therefore, if it is determined that the thermal hydraulic forces in the bundle are the same, it can be concluded that the damping forces between the Unit 2 and Unit 3 replacement steam generators must be different. Mitsubishi performed several studies that indicated that gap contact forces in the anti-vibration bars were greater in Unit 2 than in Unit 3. However, with the exception of manufacturing data that shows slight differences, there is not currently a method available to measure the clearances between the anti-vibration bars and the tubes; however, SCE is currently working with AREVA to develop a method to take these measurements.

The tube damage found in Unit 3 is markedly more severe than Unit 2, especially considering that Unit 3 operated only about half the amount of time as Unit 2. This suggests that there is indeed a sizeable difference in the damping capability of the unit steam generators.

There are generally two options to arrest localized damaging thermal hydraulic phenomena in steam generators. The first and preferred option is to plug tubes in the affected area. The collective plugging tends to relocate and reduce high fluid velocities and void fractions, and has on previous occasions in industry been successful.

However, if plugging selected tubes does not provide significant margins adequate to arrest the damage mechanism, thermal hydraulic conditions can be reduced through a reduction in power. Reducing power has several beneficial effects including (1) tends to increase steam pressure, (2) reduces high steam fluid velocities and high void fraction in the bundle, and (3) improves damping. Currently, SCE is still reviewing and developing additional corrective actions to preclude fluid-elastic instability. The NRC has been observing some of the mockup testing being used to qualify additional repair activities.

c. Conclusions

Based on the review of actual operating data and independent thermal-hydraulic modeling analyses, the team determined that there were not any major differences in the thermal hydraulic phenomena at normal full power operation.

The NRC will review both physical and operational changes that SCE completes as part of the Confirmatory Action Letter inspections.

12.0 Divider Plate Manufacturing and Weld Issues (Mitsubishi Charter Item 2)

a. Inspection Scope

On March 18, 2009, Mitsubishi identified cracking indications in the weld between the divider plate and the channel head of Unit 3 replacement steam generator 3E0-88 (see figure below), after completion of the ASME Section III hydrostatic test on the secondary side. The extent of condition investigation also identified similar cracking indications in Unit 3 replacement steam generator 3E0-89. As discussed in Section 4 of this report, the cause of the cracking was attributed to the air carbon-arc gouging process used to remove the clad weld from the channel head. The team reviewed information associated with the repair of the cracking indications to assess whether the repair activities resulted in relevant differences in design and fabrication that could be considered as contributing factors for the cause of the tube-to-tube wear issue in Unit 3.

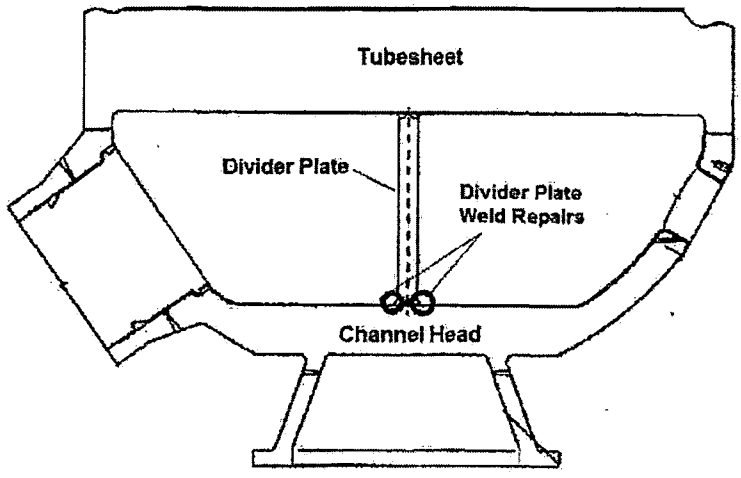


Location of Divider Plate Weld Repairs in Unit 3 Steam Generators (For Illustration Purposes Only)

b. Observations and Findings

No findings were identified.

The team identified an unresolved item for which additional information is required to determine if a performance deficiency exists or if the issue constitutes violation of NRC requirements. The team also identified several observations related to the divider plate weld repairs in Unit 3 replacement steam generators.

1) Introduction: The team identified an Unresolved Item associated with the adequacy of evaluation and controls for the divider plate weld repairs.

Description: The cracking of the divider plate weld in both Unit 3 replacement steam generators required extensive repairs affecting the channel head, divider plate, and tubesheet. Based on interviews with licensee personnel and the review of documentation for the repairs, the team determined that Mitsubishi did not perform a comprehensive evaluation to assess the impact of the divider plate repairs on the integrity of the tube bundle. The team determined that the areas listed below were not considered or evaluated in sufficient depth to identify the potential adverse effects of the planned weld repairs.

- Additional Rotations – The repair activities for the Unit 3 steam generators required additional rotations of the steam generator assembly while these were oriented in the horizontal position. The repairs resulted in approximately 300 additional rotations in each steam generator, which could have affected the configuration of the tube bundle in terms of anti-vibration bar gaps or distortion. The team identified that Mitsubishi did not fully evaluate the impact of additional rotations on the configuration of the steam generators since rotation was considered a normal evolution in the fabrication process.

- Heat Input – The repair process included extensive heat-adding activities such as grinding, flame cutting, and post-weld heat treatment. While these activities were performed in accordance with the construction code of record and an approved repair plan, they could have resulted in thermal expansion and unintended distortion of steam generator components. For example, the channel heads were removed using flame cutting and Mitsubishi's evaluation for the impact of this activity was limited to the base material area in the vicinity of the cut, i.e. the heat affected zone. Mitsubishi did not fully assess the impact this activity could have on the overall configuration of the steam generator in terms of thermal expansion of the tubesheet or distortion.

- Dimensional Checks after Repair – The team identified that Mitsubishi did not perform dimensional verifications (e.g. clearances) of the tube bundle or other secondary side dimensions after the repairs of the Unit 3 steam generators to confirm that critical dimensions were not affected by the repairs.

Additional review by the NRC is required following completion of the licensee's cause evaluation to fully assess how the repair activities affected the Unit 3 replacement steam generators and then determine whether this issue represents a performance

deficiency or constitutes a violation of NRC requirements. This issue is identified as URI 05000362/2012007-09, "Evaluation of the Effects of Divider Plate Weld Repairs in Unit 3 Replacement Steam Generators."

2) Repair Plan: The team noted that Mitsubishi developed a specific plan to conduct the repair of the divider plate weld in both Unit 3 replacement steam generators. The repair plan adequately described the major repair steps and the required implementing procedures. For some of the repair stages, the licensee developed new procedures to prescribe activities outside the normal fabrication sequence. The repair plan consisted of the following major steps:

   - Cutting off the divider plate from the tubesheet by grinding
   - Cutting off the channel head from the tubesheet by flame cutting
   - Cutting the divider plate from the channel head by grinding
   - Removal of the heat affected zone of the channel head bowl edge due to flame cutting
   - Application of weld buildup and post-weld heat treatment on the channel head bowl edge
   - Application of low alloy steel buildup and Alloy 690 butter on the bottom of the channel head for divider plate welding, including required post-weld heat treatment
   - Application of Alloy 690 buildup on the divider plate, including required post-weld heat treatment
   - Welding divider plate to channel head
   - Welding the divider plate to the tubesheet
   - Welding the channel head to the tubesheet
   - Primary side hydrostatic test

3) Differences between Replacement Steam Generators: The team identified the notable differences listed below between Unit 2 and Unit 3 replacement steam generators as a result of the divider plate weld repair activities.

   - Material Class for the Tubesheets – The tubesheet material for both Unit 3 replacement steam generators was reclassified to facilitate the additional post-weld heat treatment required for the repair of the divider plate welds. The tubesheet manufacturer originally certified that the tubesheet material met the requirements of ASME specification SA-508/Grade 3/Class 2, with a post-weld heat treatment time of approximately 15 hours. The repair activities in Unit 3 required additional post-weld heat treatment, which was expected to affect the properties of the tubesheet material to the extent that the mechanical properties would not meet the requirements for SA-508/Grade 3/Class 2 material. Mitsubishi performed mechanical testing on a specimen fabricated from the archive samples that was exposed to 30 hours of post-weld heat treatment and the tests showed that the tubesheet material's tensile strength did not meet the ASME specifications for SA-508/Grade 3/Class 2 material. Mitsubishi performed a reconciliation review to reclassify the material to SA-508/Grade 3/Class 1,

which has a lower tensile strength. The reconciliation included an evaluation of resulting stresses on the tubesheet under design, upset, emergency, faulted, and test conditions using the material properties for SA-508/Class 1 material. The evaluation resulted in acceptable stresses based on the stress limits imposed by the construction code of record. This issue was evaluated by Mitsubishi in the non-conformance report process and Supplier Deviation Request SDR-08610041870-09086 was submitted to the licensee for review and approval. The licensee approved the reclassification of the tubesheet material.

- Minimum Thickness of the Channel Head Base Metal – The channel heads of both Unit 3 steam generators were removed by flame cutting to facilitate the divider plate weld repairs. The removal and final welding of the channel head resulted in a reduction of the minimum wall thickness of the channel head base metal. The minimum base metal thickness was reduced by 1.18-inches. Mitsubishi evaluated this change in the "Design Report for the Channel Head Region." The reduction in minimum wall thickness was addressed through a reconciliation of stress ratios based on the stress limits imposed by the construction code of record. The analysis demonstrated the structural adequacy of the channel head, primary inlet nozzle, primary outlet nozzle, primary manway, support skirt, and the stud bolts of the primary manway.

- Number of Bolts in the Divider Plate Patch Plates – The original design of the replacement steam generators included a patch plate held in place at the upper corners of the divider plate by three bolts. As a result of the divider plate-to-tubesheet weld removal to support the repair activities, the Unit 3 divider plate patch plates were modified to be held by two bolts instead of the three bolts specified in the original design. Mitsubishi submitted this design change to the licensee for review and approval. Licensee personnel approved the design change as requested.

- Weld Buildup on Channel Head Surfaces – Since the repair of the divider plate welds in Unit 3 steam generators required cutting of the channel head, weld buildup had to be applied on the affected surfaces in order to restore the dimensions to design specifications. Mitsubishi submitted this design change to the licensee for review and approval. Licensee personnel approved the design change as requested.

- Post Weld Heat Treatment – The tubesheet-to-channel head weld area experienced a total of two post-weld heat treatments. Both Unit 3 replacement steam generators received an additional local post-weld heat treatment at approximately 1103° F for approximately 3.5 hrs. Mitsubishi submitted this fabrication process change to the licensee for review and approval. Licensee personnel approved the design change as requested.

- Total of Rotations during Fabrication – The total number of rotations on each steam generator varied as a result of the hydrostatic test results and the repairs on the divider plate welds.

| Steam Generator | Initial Rotations | Additional Rotations for Divider Plate Repairs | Total Rotations |
|---|---|---|---|
| Unit 2 E0-89 | 520 | 0 | 520 |
| Unit 2 E0-88 | 510 | 0 | 510 |
| Unit 3 E0-89 | 470 | 340 | 810 |
| Unit 3 E0-88 | 440 | 320 | 760 |

c. Conclusions

The team identified one unresolved item associated with the repair work done on the Unit 3 divider plate. The team did not identify any connection between these shipping changes and the unexpected tube-to-tube wear.

13.0 Office of Nuclear Reactor Regulation (NRR) Review of SONGS 50.59 Evaluation

a. Inspection Scope

The NRR technical specialist reviewed all of the design changes associated with the replacement steam generators to determine whether the changes to the facility or procedures, as described in the updated final safety analysis report, had been reviewed and documented in accordance with 10 CFR 50.59 requirements. The technical specialist reviewed the various information used by SCE to review the changes being made to the replacement steam generators, including calculations, analyses, design change documentation, procedures, the updated final safety analysis report, the technical specifications, and plant drawings. The evaluation process used by the technical specialist included determining if the design changes to the replacement steam generators were a change to the facility or procedures as described in the updated final safety analysis report or a test or experiment not described in the updated final safety analysis report. The technical specialist also verified that safety issues related to the changes were resolved. The technical specialist compared the safety evaluations and supporting documents to the guidance and methods provided in NEI 96-07, "Guidelines for 10 CFR 50.59 Implementation," Revision 1, as endorsed by NRC Regulatory Guide 1.187, "Guidance for Implementation of 10 CFR 50.59, Changes, Tests, and Experiments," to determine the adequacy of the 10 CFR 50.59 evaluations.

b. Observations and Findings

No findings were identified

The NRR technical specialist identified one unresolved item for which additional information is required to determine if performance deficiencies exist or if the issues constitute violations of NRC requirements.

(1) Introduction: The NRR technical specialist reviewed SCE's 10 CFR 50.59 evaluation contained in Engineering Change Packages 800071702 and 800071703 for the Unit 2 and Unit 3 replacement steam generators, respectively, in which SCE determined that the impact of the replacement steam generators on the current licensing basis and any need for NRC approval as required by 10 CFR 50.59.

(2) Description: The NRR technical specialist reviewed the SCE's 10 CFR 50.59 evaluation against 10 CFR 50.59(c)(2)(viii) which requires that licensees obtain a license amendment pursuant to 10 CFR 50.90 prior to implementing a proposed change if the change would result in a departure from a method of evaluation described in the final safety analysis report (as updated) used in establishing the design bases or in the safety analyses. Industry guidance NEI 96-07, Revision 1, Section 3.10, "Methods of Evaluation," states, "Definition: Methods of evaluation means the calculational framework used for evaluating behavior or response of the facility or structures, systems, and components." Regulation 10 CFR 50.59 a(2), states, "*Departure from a method of evaluation described in the FSAR (as updated) used in establishing the design bases or in the safety analyses* means (i) changing any of the elements of the method described in the FSAR (as updated) unless the results of the analysis are conservative or essentially the same; or (ii) changing from a method described in the FSAR to another method unless that method has been approved by NRC for the intended application." Regulation 10 CFR 50.59(d)(1) requires that the licensee maintain records of changes in the facility that "includes a written evaluation which provides the bases for the determination that the change, test, or experiment does not require a license amendment...." The technical specialist evaluated SCE's bases for determining that the changes would not result in the departure from the method of evaluation used in establishing the design bases or in the safety analyses. Specifically, the technical specialist evaluated whether the changes involved:

(a) changing of any of the elements of the method described in the updated final safety analysis report, which consistent with 10 CFR 50.59 a(2)(i) would be justified by demonstrating that the results of the analysis are conservative or essentially the same; or

(b) changing from a method described in the updated final safety analysis report to another method, which consistent with 10 CFR 50.59 a(2)(ii) would be justified by demonstrating that method has been approved by NRC for the intended application.

The NRR technical specialist reviewed SCE's 10 CFR 50.59 evaluation and found two instances that failed to adequately address whether the change involved a departure of the method of evaluation described in the updated final safety analysis report.

(a) Use of ABAQUS instead of ANSYS: Updated Final Safety Analysis Report

Sections 3.9.1.2.2.1.11 and 3.9.1.2.2.2.3 were revised to reflect that the SONGS Unit 2 and 3 original steam generators stress analyses for reactor coolant system structural integrity utilized the ANSYS computer program, whereas the replacement steam generators analyses utilized the ABAQUS computer program. The SCE's 50.59 evaluation incorrectly determined that using the ABAQUS instead of ANSYS was a change to an element of the method described in the updated final safety analysis report did not constitute changing from a method described in the updated final safety analysis report to another method, and as such, did not mention whether ABAQUS has been approved by the NRC for this application.

(b) Use of ANSYS instead of STRUDL and ANSYS: Updated Final Safety Analysis Report Section 5.4.2.3.1.3 was revised to reflect that the SONGS Unit 2 and 3 evaluation of tube stress under loss of coolant accident conditions for the original steam generators consisted of a two-step process utilizing the STRUDL and ANSYS computer programs to calculate displacement histories and tube stresses, respectively, while the corresponding replacement steam generators analysis determined tube stresses from blowdown forces using only the ANSYS computer program. While SCE's 50.59 evaluation correctly considered this a change from a method described in the FSAR to another method, the 50.59 evaluation did not mention whether the method has been approved by NRC for this application.

This issue is identified as URI 05000362/2012007-10, "Evaluation of Departure of Method of Evaluation for 10 CFR 50.59 Processes."

c. Conclusions

The NRR technical specialist identified one unresolved item associated with change in the method of evaluation as described in the updated final safety analysis report. Additional review and followup will be required to review the departure of the method of evaluation used during the stress analysis calculations associated with the replacement steam generators.

14.0 Exit Meeting Summary

On June 18, 2012, the NRC held a public meeting and presented the inspection results to Mr. P. Dietrich, Senior Vice President and Chief Nuclear Officer, and other members of the staff, who acknowledged the findings. Proprietary information was provided to the team and all proprietary information was returned to SCE.

**SUPPLEMENTAL INFORMATION**
**KEY POINTS OF CONTACT**

Licensee Personnel

P. Dietrich, Senior Vice President and Chief Nuclear Officer
R. Litzinger, President, SCE
D. Bauder, Vice President and Station Manager
T. Palmisano, Vice President of Engineering, Projects and Site Support
T. McCool, Plant Manager
T. Yackle, Assistant Plant Manager
D. Yarbrough, Director, Operations
R. Corbett, Director, Performance Improvement
O. Flores, Director, Nuclear Oversight
R. St. Onge, Director, Nuclear Regulatory Affairs
B. Winn, Director, Nuclear Financial Management
E. Avella, Director, Project Management
M. Coveney, Director, Nuclear Leadership
M. Stevens, Technical Specialist, Nuclear Regulatory Affairs
C. Cates, Manager, Nuclear Safety Culture and Site Recovery
M. Malzahn, Engineer, Project Management
C. Harberts, Manager, Steam Generator Replacement Project
M. Mihalik, Senior Engineer, Project Management Organization
R. McWey, Manager, Nuclear Oversight
M. Pawlaczyk, Technical Specialist, Nuclear Regulatory Affairs
J. Peattie, Manager, Maintenance
R. Treadway, Manager, Nuclear Regulatory Affairs
B. Olech, Consulting Engineer, Edison
D. Brabec, Project Manager, Steam Generator Recovery Program
D. Calhoun, Senior Engineer, Design Engineering Organization, Edison

Mitsubishi Personnel

H. Kaguchi, Mitsubishi Heavy Industries, Director, Component Designing Department
I. Otake, Mitsubishi Heavy Industries, Deputy Chief Engineer, Quality Assurance Department
T. Tsuruta, Mitsubishi Heavy Industries, Engineer, Quality Assurance Department
T. Inoue, Mitsubishi Heavy Industries, Deputy Director, Plant Designing Department
H. Hirano, Mitsubishi Heavy Industries, Project Manager, Overseas Project, Component Designing Department
R. Bywater, Mitsubishi Nuclear Energy Systems, COLA Project Manager
F. Gillespie, Mitsubishi Nuclear Energy Systems, Senior Vice President
R. Godley, Mitsubishi Nuclear Energy Systems, Deputy General Manager, Licensing Support

Other Contractor Personnel

R. Walker, MPR Consultant
M. Short, Consultant
B. Marlow, AREVA, Vice President, Key Accounts
M. Street, AREVA, Manager, Primary Component Projects and Warranty Support

M. Miller, AREVA, Advisory Engineer
S. Claunch, AREVA, Advisory Engineer

NRC Personnel
T. Blount, Deputy Division Director, Division of Reactor Safety
R. Lantz, Branch Chief, Projects Branch D
G. Warnick, Senior Resident Inspector

## LIST OF ITEMS OPENED, CLOSED AND DISCUSSED

Opened

| | | |
|---|---|---|
| 05000362/2012007-01 | URI | Adequacy of the Trip/Transient and Event Review Procedure (Section 1) |
| 05000362/2012007-02 | URI | Evaluation of Unit 3 Vibration and Loose Parts Monitoring System Alarms (Section 3) |
| 05000362/2012007-03 | URI | Evaluation of Retainer Bars Vibration during the Original Design of the Replacement Steam Generators (Section 4 |
| 05000362/2012007-04 | URI | Evaluation of Changes in Dimensional Controls during the Fabrication of Unit 2 and Unit 3 Replacement Steam Generators (Section 4) |
| 05000362/2012007-05 | URI | Shipping Requirements not in Accordance with Industry Standards (Section 7) |
| 05000362/2012007-06 | URI | Shipping Requirements not in Accordance with Design and Fabrication Specifications (Section 7) |
| 05000362/2012007-07 | URI | Unit 3 Steam Generator 3E0-88 Stresses Related to Handling (Section 7) |
| 05000362/2012007-08 | URI | Non-Conservative Thermal-Hydraulic Model Results (Section 8) |
| 05000362/2012007-09 | URI | Evaluation of the Effects of Divider Plate Weld Repairs in Unit 3 Replacement Steam Generators (Section 12) |
| 05000362/2012007-10 | URI | Evaluation of Departure of Method of Evaluation for 10 CFR 50.59 Processes (Section 13) |

Closed

None

Discussed

None

## LIST OF DOCUMENTS REVIEWED

AUDITS/SELF-ASSESSMENTS/QUALITY CONTROL DRAWINGS

SONGS DOCUMENTS

| Number | Title | Revision/Date |
|---|---|---|
| MHI-1-06 | Southern California Audit of Mitsubishi Heavy Industries | June 16, 2006 |
| MHI-1-09 | Southern California Audit of Mitsubishi Heavy Industries | April 27, 2009 |
| MHI-2-04 | Southern California Audit of Mitsubishi Heavy Industries | December 14, 2004 |
| SCES-007-10 | Procurement and Material Control Program Audit | September 14, 2010 |
| MHI-01-04 | Evaluation and Review of Contractor, Consultant, Utility or Licensee Audit Report | September 24, 2004 |
| | Status of Southern California Edison (SCE) Corrective Action Request (CAR) Nos. S-1918 and S-1932 Closure | March 23, 2007 |
| | Southern California Edison (SCE) Corrective Action Request (CAR) No. S-1991, Supplier Stop Work Order (SSWO) No. SSWO-001-08 | 1 |
| | RSG-SCE/MHI-06-2233 – Southern California Edison (SCE) Corrective Action Request (CAR) No. S-1882 Closure | May 3, 2006 |
| | RSG-SCE/MHI-06-1916 - Southern California Edison (SCE) Corrective Action Request, (CAR) No. S-1906 Closure | February 22, 2006 |
| | Southern California Edison (SCE) Audit No. MHI-1-06 and Corrective Action Request (CAR) Nos. S-1915, S-1916, S-1917, and S-1918 | January 31, 2008 |
| AR# 040901345 | Qualification Letter | September 24, 2004 |
| AR#050301458 | Qualification Letter | March 23, 2005 |

| Number | Title | Revision/Date |
|---|---|---|
| AR#06050013 4 | Qualification Letter | May 10, 2006 |
| 6C294014 | Edison Material Supply Procurement Order for Mitsubishi Heavy Industries | September 28, 2004 |
| SO23-617-01 | Specifications for design and fabrication of RSG for Unit 2 and Unit 3 | 4 |
| SO23-617-02 | Specifications for Baseline Pre-Service Examination on Tubing for RSG | 1 |
| SO23-617-03 | Replacement Steam Generator Installation Unit 2 and 3 | 4 |
| SO23-617-04 | Specifications for the Transportation of Replacement Steam Generators | 1 |
| TL C001783 | San Onofre Topical Report Quality Assurance Manual | 64 |
| TL C001782 | San Onofre 2&3 FSAR Updated Quality Assurance Program Topical Report SCE-1 | 15 |
| | SONGS Unit 2 & 3 Replacement Steam Generator QA/QC Manufacturing Oversight Plan Japan Steel Works | 0 |
| | SONGS Unit 2 & 3 Replacement Steam Generator QA/QC Oversight Plan | 1 |
| | SONGS Unit 2 & 3 Replacement Steam Generator Receipt Inspection Plan | 0 |
| SGR-A10183 | Replacement Steam Generator Resident Oversight Plan | 1 |
| SGR-A10159 | San Onofre Nuclear Generating Station Unit 2 & 3 Steam Generator Replacement Project Plan | 1 |
| MHI-1SV-05 | Source Verification Report of MHI/Japan Steel Work | March 15, 2005 |
| MHI-1SV-06 | Source Verification Report of MHI/Japan Steel Work | February 7, 2006 |
| MHI-1SV-07 | Source Verification Report of MHI | March 20, 2007 |
| MHI-1SV-08 | Source Verification Report of MHI/Japan Steel Work | August 29, 2008 |
| MHI-2SV-05 | Source Verification Report of MHI | April 1, 2005 |
| MHI-2SV-06 | Source Verification Report of MHI/Japan Steel Work | March 24, 2006 |

| Number | Title | Revision/Date |
|---|---|---|
| MHI-2SV-07 | Source Verification Report of MHI | November 2, 2007 |
| MHI-3SV-05 | Source Verification Report of MHI/Japan Steel Work | May 3, 2005 |
| MHI-3SV-06 | Source Verification Report of MHI | May 3, 2006 |
| MHI-4SV-05 | Source Verification Report of MHI/Japan Steel Work | May 4, 2005 |
| MHI-4SV-06 | Source Verification Report of MHI/Japan Steel Work | May 23, 2006 |
| MHI-5SV-05 | Source Verification Report of MHI/Japan Steel Work | June 10, 2005 |
| MHI-5SV-06 | Source Verification Report of MHI | September 26, 2006 |
| MHI-6SV-05 | Source Verification Report of MHI | July 1, 2005 |
| MHI-6SV-06 | Source Verification Report of MHI | January 24, 2007 |
| MHI-7SV-05 | Source Verification Report of MHI/Japan Steel Work | August 12, 2005 |
| MHI-7SV-06 | Source Verification Report of MHI | January 16, 2007 |
| MHI-8SV-05 | Source Verification Report of MHI | March 26, 2007 |
| MHI-9SV-05 | Source Verification Report of MHI/Japan Steel Work | October 13, 2005 |
| MHI-10SV-05 | Source Evaluation Report of MHI | February 8, 2006 |
| MHI-11SV-05 | Source Verification Report of MHI/Japan Steel Work | December 21, 2005 |

CALCULATIONS

| Number | Title | Revision |
|---|---|---|
| SO23-617-1-C275 | Design Report of the Channel Head Region | 6 |
| SO23-617-1-C514 | Design for RCS Flow Rate | 1 |
| SO23-617-1-M1562 | Retainer Bar Tube Wear Report | 0 |

DESIGN BASIS DOCUMENTS

| Number | Title | Revision |
|---|---|---|
| SO23-617-01 | Specification for Design and Fabrication of RSGs for Unit 2 and Unit 3 | 4 |
| SO23-617-1-M1492 | As-Built Reconciliation Report for Unit 3 | 2 |
| L5-04GA428 | Design of Anti-Vibration Bar | 5 |
| DBD-SO23-365 | Design Basis for Steam Generator and Secondary Side | 10 |

DESIGN CHANGE NOTIFICATIONS/SUPPLIER DEVIATION REQUESTS

| Number | Title | Revision |
|---|---|---|
| NECP 800071703 | Engineering Change Package, "Replacement Steam Generators" | 0 |
| SDR-007 43366-05007 | Circulation Ratio for RSG | 0 |
| SDR-037 43366-06037 | Tube-to-Tube Clearance in 2A RSG | 0 |
| SDR-047 43366-07047 | Tool Mark in 3A Tubesheet | 0 |
| SDR-050 43366-07050 | Tool Mark in 3B Tubesheet | 0 |
| SDR-051 43366-07051 | Unit 2A Lower Shell Assembly | 0 |

| Number | Title | Revision |
|---|---|---|
| SDR-053 43366-07053 | Unit 2B Lower Shell Assembly | 0 |
| SDR-059 43366-08059 | Unit 3B Lower Shell Assembly | 0 |
| SDR-064 43366-08064 | Axial Length of AVB | 0 |
| SDR-079 43366-08079 | Statistical Size of Tube-to-AVB Gap | 0 |
| SDR-082 43366-09082 | Divider Plate Repair of Unit 3 RSGs | 0 |
| SDR-086 10041870-09086 | Specifications for Unit 3 RSG Tube Material | 0 |
| SDR-098 10041870-10098 | Overall Height of 3A RSG | 0 |
| SDR-099 10041870-10099 | Perpendicularity and Parallelism of 3A RSG Key Bracket | 0 |
| SDR-100 10041870-10100 | Parallelism of 3B RSG Key Bracket | 0 |

DRAWINGS

| Number | Title | Revision |
|---|---|---|
| SO23-617-1-D103 | Design Drawing – Component and Outline Drawing 1 / 3 | 5 |
| SO23-617-1-D104 | Design Drawing – Component and Outline Drawing 1 / 3 | 2 |
| SO23-617-1-D106 | Design Drawing Tubesheet and Extension Ring 1 of 3 | 12 |
| SO23-617-1-D107 | Design Drawing Tubesheet and Extension Ring 2 of 3 | 5 |
| SO23-617-1-D108 | Design Drawing Tubesheet and Extension Ring 3 of 3 | 8 |
| SO23-617-1- | Design Drawing Lower Shell, Middle Shell, Transition Cone | 5 |

| Number | Title | Revision |
|---|---|---|
| D109 | and Upper Shell Stub 1 of 4 | |
| SO23-617-1-D110 | Design Drawing Lower Shell, Middle Shell, Transition Cone and Upper Shell Stub 2 of 4 | 7 |
| SO23-617-1-D111 | Design Drawing Lower Shell, Middle Shell, Transition Cone and Upper Shell Stub 3 of 4 | 4 |
| SO23-617-1-D112 | Design Drawing Lower Shell, Middle Shell, Transition Cone and Upper Shell Stub 4 of 4 | 4 |
| SO23-617-1-D113 | Design Drawing Channel Head 1 of 4 | 9 |
| SO23-617-1-D113 | Design Drawing Channel Head 1 of 4 | 15 |
| SO23-617-1-D114 | Design Drawing Channel Head 2 of 4 | 13 |
| SO23-617-1-D115 | Design Drawing Channel Head 3 of 4 | 5 |
| SO23-617-1-D116 | Design Drawing Tube Bundle 1 of 3 | 1 |
| SO23-617-1-D117 | Design Drawing Tube Bundle 2 of 3 | 1 |
| SO23-617-1-D118 | Design Drawing Tube Bundle 3 of 3 | 3 |
| SO23-617-1-D159 | Design Drawing Upper Shell, Upper Head Ring and Upper Head Top 1 of 4 | 7 |
| SO23-617-1-D160 | Design Drawing Upper Shell, Upper Head Ring and Upper Head Top 2 of 4 | 2 |
| SO23-617-1-D161 | Design Drawing Upper Shell, Upper Head Ring and Upper Head Top 3 of 4 | 4 |
| SO23-617-1-D162 | Design Drawing Upper Shell, Upper Head Ring and Upper Head Top 4 of 4 | 2 |
| SO23-617-1-D210 | Design Drawing of Moisture Separator Assembly 1 of 6 | 10 |
| SO23-617-1-D211 | Design Drawing of Moisture Separator Assembly 2 of 6 | 10 |
| SO23-617-1- | Design Drawing of Moisture Separator Assembly 3 of 6 | 5 |

| Number | Title | Revision |
|---|---|---|
| D212 | | |
| SO23-617-1-D274 | Design Drawing Channel Head 4 of 4 | 4 |
| SO23-617-1-D294 | Design Drawing Tube Support Plate Assembly 1 of 3 | 3 |
| SO23-617-1-D295 | Design Drawing Tube Support Plate Assembly 2 of 3 | 4 |
| SO23-617-1-D296 | Design Drawing Tube Support Plate Assembly 3 of 3 | 5 |
| SO23-617-1-D383 | Design Drawing – Critical Field Interface Dimensions and Major Tolerances 1 / 3 | 7 |
| SO23-617-1-D391 | Design Drawing Wrapper Assembly 1 of 5 | 5 |
| SO23-617-1-D392 | Design Drawing Wrapper Assembly 2 of 5 | 0 |
| SO23-617-1-D393 | Design Drawing Wrapper Assembly 3 of 5 | 2 |
| SO23-617-1-D394 | Design Drawing Wrapper Assembly 4 of 5 | 2 |
| SO23-617-1-D395 | Design Drawing Wrapper Assembly 5 of 5 | 3 |
| SO23-617-1-D494 | Design Drawing – Divider Plate1 / 2 | 10 |
| SO23-617-1-D495 | Design Drawing – Divider Plate 2 / 2 | 6 |
| SO23-617-1-D507 | Design Drawing Anti-Vibration Bar Assembly 1 of 9 | 4 |
| SO23-617-1-D508 | Design Drawing Anti-Vibration Bar Assembly 2 of 9 | 2 |
| SO23-617-1-D509 | Design Drawing Anti-Vibration Bar Assembly 3 of 9 | 0 |
| SO23-617-1-D539 | Design Drawing Anti-Vibration Bar Assembly 4 of 9 | 0 |
| SO23-617-1-D540 | Design Drawing Anti-Vibration Bar Assembly 5 of 9 | 2 |

| Number | Title | Revision |
|---|---|---|
| SO23-617-1-D541 | Design Drawing Anti-Vibration Bar Assembly 6 of 9 | 2 |
| SO23-617-1-D542 | Design Drawing Anti-Vibration Bar Assembly 7 of 9 | 8 |
| SO23-617-1-D543 | Design Drawing Anti-Vibration Bar Assembly 8 of 9 | 3 |
| SO23-617-1-D544 | Design Drawing Anti-Vibration Bar Assembly 9 of 9 | 1 |
| SO23-617-1-D680 | Design Drawing – Tubing Expansion and Seal Welding | 3 |
| SO23-617-1-D1099 | Fabrication Drawing – General Shipping Arrangement [SON 2E89; SON 2E882E0-88] | 2 |
| SO23-617-1-D1100 | Fabrication Drawing – General Shipping Arrangement [SON 3E89; SON 3E88] | 2 |
| SO23-617-1-D1488 | Fabrication Drawing – Temporary Attachment For Channel Head and Tubesheet Welding (Unit 3) | 0 |
| L5-04FW111 | Detail of AVB 1 of 5 (Center Narrow AVB) | 6 |
| L5-04FW112 | Detail of AVB 2 of 5 (Center Wide AVB) | 2 |
| L5-04FW113 | Detail of AVB 3 of 5 (Side Narrow AVB) | 2 |
| L5-04FW114 | Detail of AVB 4 of 5 (Side Wide AVB for Hot Side) | 2 |
| L5-04FW115 | Detail of AVB 5 of 5 (Side Wide AVB for Cold Side) | 2 |

ENGINEERING REPORTS (ER)

| Number | Title | Revision |
|---|---|---|
| SO23-617-1-M1401 | Divider Plate Weld Joint Separation Root Cause Evaluation Report | 4 |
| SO23-617-1-C157 | Evaluation of Tube Vibration | 3 |
| SO23-617-1-C749 | Analytical Report of AVB Assembly | 4 |
| SO23-617-1-M1265 | Summary Design Report | 8 |

| | | |
|---|---|---|
| SO23-617-1-M1231 | Performance Analysis Report | 3 |
| SO23-617-1-C682 | Analytical Report of Separator and Dryer Assemblies | 7 |
| SO23-617-01R3 | Design Report of Tube | 5 |

MHI DOCUMENTS

| Number | Title | Revision/Date |
|---|---|---|
| UHQ-08N013 | MHI Survey Report of Sumitomo Metal Industries, Limited. Steel Tube Works | 0 |
| UHQ-11N010 | MHI Survey Report of Sumitomo Metal Industries, Limited. Steel Tube Works | 0 |
| UHQ-05N015 | MHI Survey Report of Sumitomo Metal Industries, Limited. Pipe & Tube Works | 1 |
| UHQ-08N014 | MHI Survey Report of Sumitomo Metal Industries, Limited. Steel Tube Works | 0 |
| UHQ-11S005 | MHI Survey Report of Sumitomo Metal Industries, Limited. Steel Tube Works | 0 |
| UHQ-05N019 | MHI Survey Report of Sumitomo Metal Industries, Limited. Steel Tube Works | 0 |
| BUH94-06 | Quality Assurance Survey/Audit Procedure of Vendors | 6 |
| BUH94-06 | Vendor Evaluation Procedure | 9 |
| BUH94-06 | Vendor Evaluation Procedure | 13 |
| 5ZDD94-06 | Vendor Evaluation Procedure | 1 |
| UHW-68-06A002 | MHI Evaluation on Corrective Action Established by Sumitomo Metal Industries Limited | 0 |
| UHNR-SON-RSG-06N005 | Nonconformance Report for Alloy 690 SG Tubing for SONGS Unit 2 | |
| UHQ-07N004 | MHI Audit Report of Sumitomo Metal Industries, Limited. Steel Tube Woks | 1 |

| Number | Title | Revision/Date |
|---|---|---|
| UHQ-08N013 | MHI Survey Report of Sumitomo Metal Industries, Limited. Steel Tube Works | 0 |
| UHCP-70N004 | Corrective Action Plan Followup Report | 0 |
| UES-20100006 | Qualified Vendor List | 18 |
| L5-04GB004 | Submittal Document Control List | 53 |
| UGNR-SON2-RSG-020 | Nonconformance Report Channel head for Unit 2A | February 2, 2006 |
| UGNR-SON2-RSG-038 | Nonconformance Report Unacceptable local diameter change of tube holes | June 2, 2006 |
| UGNR-SON2-RSG-052 | Nonconformance Report Unacceptable length of 10 tube hole pitch of tube support plate #3 | September 11, 2006 |
| UGNR-SON2-RSG-062 | Nonconformance Report Incorrect end caps of AVB 2ASN154C and AVB 2ASN164C | December 1, 2006 |
| UGNR-SON2-RSG-075 | Nonconformance Report Unacceptable gaps between tubes and AVBs | March 24, 2007 |
| UGNR-SON2-RSG-091 | Nonconformance Report Incorrect machining for steam flow limiting device | September 4, 2007 |
| UGNR-SON2-RSG-096 | Nonconformance Report Unacceptable dimensions for steam flow limiting device of Unit 2A | October 23, 2007 |
| UGNR-SON3-RSG-009 | Nonconformance Report Unacceptable local diameter change of tube holes | May 10, 2007 |
| UGNR-SON3-RSG-024 | Nonconformance Report Some gaps between tubes and AVBs are larger than the criterion | November 30, 2007 |
| UGNR-SON3-RSG-049 | Nonconformance Report Out of tolerance on hand holes inside diameter | March 2, 2009 |
| UGNR-SON3-RSG-055 | Nonconformance Report Divider plate metal repair butter/weld crack after post bake | September 11, 2009 |
| UGNR-SON-RSG-06N002 | Nonconformance Report Feedwater nozzle for unit 2 ID: 21721-101 | February 2, 2006 |
| UGS-L5-050043 | Anti-Vibration Bar Inspection Procedure (Individual Bar) | 1 |

| Number | Title | Revision/Date |
|---|---|---|
| UHQ-08N013 | MHI Survey Report of Sumitomo Metal Industries, Limited. Steel Tube Works | 0 |
| UGS-L5-050045 | Inspection Procedure for Tube and Anti-Vibration Bar Inspection | 10 |
| B91U-N0001 | Mitsubishi Heavy Industries Ltd Kobe Shipyard & Machinery Works Quality Assurance Manual (Nuclear) | 39 |
| UES-69-040038 | Mitsubishi Heavy Industries Ltd Kobe Shipyard & Machinery Works Quality Assurance Program Manual (Project Addenda) | 15 |
| UHH-G06A97 | Stop Work Order for FMA (Final Mill Annealing) on Manufacturing of Heat Transfer Tubing for SONGS RSG | 0 |

MISCELLANEOUS DOCUMENTS

| Number | Title | Revision/Date |
|---|---|---|
| AR 060500134 | Action Request: Qualification Letter | |
| AR 040901345 | Action Request: Qualification Letter | |
| AR 050301458 | Action Request: Qualification Letter | |
| | Setpoint Transmittal Unit 2 and 3 Gas Monitors | December 6, 2010 |
| | SONGS Unit 3 Chemistry/Operations Logs – SG Event Timeline | January 31, 2012 |
| | Radiation Monitor 3RT-7870 Setpoints | May 31, 2011 |
| | Radiation Monitor 3RT-7818A Setpoints | May 31, 2011 |
| 2G-030-3 | Condenser Air Ejector Continuous Gas Post-Release Report | January 31, 2012 |
| SO23-617-01 | Specification for Design and Fabrication of RSGs for Unit 2 and Unit 3 | 4 |
| SO23-617-02 | Specification for Baseline Pre-Service Examination (PSE) on Tubing for Replacement Steam Generators | 1 |
| | Updated Final Safety Analysis Report for San Onofre Units 2 and 3 | April 2009 |

| Number | Title | Revision/Date |
|---|---|---|
| SO23-617-1-M29 | Design Review Item List | 9 |
| DA 2002-92 | Dominion Audit of Mitsubishi Heavy Industries | June 9, 2002 |
| V03-008 | Omaha Public Power District Audit of Mitsubishi Heavy Industries | July 18, 2003 |
| 99901030/2008-201 | Mitsubishi Heavy Industries (MHI), Kobe, Japan, inspection of selected portions of MHI's Quality Assurance (QA) program, and 10 CFR Part 21 program | July 18, 2008 |
| 99901384/2009-201 | Sumitomo Metal Industries, Limited, Higashi-Mukojima Amagasaki, Japan, inspection of selected portions of Sumitomo's quality assurance (QA) program and 10 CFR Part 21 program | November 13, 2009 |
| SMI-AQA-9041 | Reply to Notice of Nonconformance(99901 384/2009-201-01) | 0 |
| NRC Inspection Report 99901030/2008-201 | Inspection of Selected Portions of MHI's Quality Assurance and 10 CFR Part 21 Programs | July 18, 2008 |

MODIFICATIONS

| Number | Title | Date |
|---|---|---|
| Engineering Change Package NECP 800071702 | 50.59 Screening and Evaluation for Replacement Steam Generators – Unit 2 | July 31, 2009 |
| Engineering Change Package NECP 800071703 | 50.59 Screening and Evaluation for Replacement Steam Generators – Unit 3 | July 31, 2009 |

NUCLEAR NOTIFICATIONS

| | | | | |
|---|---|---|---|---|
| 201907899 | | | | |

PROCEDURES

| Number | Title | Revision |
|---|---|---|
| SO123-ODCM | Offsite Dose Calculation Manual | 0 |
| SO123-0-47 | Notification and Reporting of Significant Events | 18 |
| SO123-III-5.9 | Manual Effluent Gaseous Release Permits, Setpoint Calculations, and Monitor Calibration Constant Evaluations | 8 |
| SO123-VIII-1 | EPIP: Recognition and Classification of Emergencies | 36 |
| SD-SO23-310 | System Description - Turbine Building Sampling System | 9 |
| SD-SO23-690 | System Description – Steam Generator E088/089 | 18 |
| SD-SO23-690 | System Description – Steam Generator Radiation Monitors RE-6753 & RE-6759 | 18 |
| SD-SO23-690 | System Description – Condenser Air Ejector Wide Range Radiation Monitors RE-7870A/B & Low Range Radiation Monitors RE-7818 | 18 |
| SB-SO-FB-006 | Divider Plate Weld Joint Repair Procedure | 10 |
| SB-SO-HT-1001 | Post Weld Heat Treatment Procedure | 22 |
| SO123-XXXII-2.27 | Supplier Deviation Requests (SDRs) | 5 |
| SO23-617-1-D104 | Design Drawing - Component and Outline Drawing 2/3 | 2 |
| SO23-617-1-D1099 | General Shipment Arrangement SON-2A | 4 |
| SO23-617-1-M1246 | Hydrostatic Test Procedure | 3 |
| SO23-617-1-M139 | Post Weld Heat Treatment Procedure | 21 |

| | | |
|---|---|---|
| SO23-617-1-M1395 | Divider Plate Weld Joint Procedure | 9 |
| SO23-617-1-M1398 | Divider Plate Weld Joint Repair Plan | 12 |
| SO23-617-1-M1461 | Additional Post Weld Heat Treatment Procedure for Divider Plate Weld Joint Repair | 0 |
| SO23-617-1-M616 | Tubesheet Drilling Procedure | 9 |
| SO23-617-1-M733 | Helium Leak Test Procedure of the Tube to Tubesheet Welds (High Pressure) | 5 |
| SO23-617-1-M735 | Helium Leak Test Procedure of the Tube to Tubesheet Welds (Low Pressure) | 3 |
| SO23-617-1-M819 | AVB Structure Assembly Procedure | 8 |
| SO23-617-1-M820 | Tubing and AVB Installation Procedure | 6 |
| SO23-617-1-M821 | Anti-Vibration Bar Inspection Procedure (After Assembly) | 5 |
| SO123-XV-50 | Corrective Action Program | 25 |
| SO123-XII-18.19 | Nuclear Oversight Procedure Supplier Audits | 10 |
| SO123-XII-7.12 | Nuclear Oversight Procedure Source Verification | 5 |

VENDOR DOCUMENTS

| Number | Title | Revision/Date |
|---|---|---|
| 51-9176667-001 | Engineering Information Record, "SONGS 2C17 & 3C17 Steam Generator Degradation Assessment" | 1 |
| UGNR-SON2-RSG-012 | DI for Tube Support Plate Material | 1 |
| UGNR-SON2-RSG-014 | Discrepancy for tube thickness of TSP between Drawing and Purchase Specification | 0 |

| Number | Title | Revision/Date |
|---|---|---|
| UGNR-SON2-RSG-015 | Unacceptable Indications by MT for wrapper support of Unit 2 #A | 1 |
| UGNR-SON2-RSG-021 | Unacceptable Indications by MT for Anti rotation support of Unit 2 #A | 0 |
| UGNR-SON2-RSG-027 | Unacceptable MT indication for Anti-Rotation Supports | 0 |
| UGNR-SON2-RSG-054 | Unacceptable length of 10 tube hole pitch of tube support Plate # 6 | 1 |
| UGNR-SON2-RSG-058 | Insufficient clearance between the tubes in Row No. 28 and 30 in Column No. 22 | 3 |
| UGNR-SON2-RSG-059 | Insufficient clearance between the tubes in Row No 92 and 94 in Column No. 34 | 0 |
| UGNR-SON2-RSG-067 | Unacceptable Gaps between Tubes and AVBs | 7 |
| UGNR-SON2-RSG-075 | Unacceptable gaps between Tubes and AVBs | 1 |
| UGNR-SON2-RSG-091 | Incorrect Machining for Steam Flow Limiting Device | 0 |
| UGNR-SON2-RSG-103 | Damaged Locking Plates of Vane Jacking Device | 9 |
| UGNR-SON2-RSG-109 | As built dimension of #2A RSG | 1 |
| UGNR-SON2-RSG-112 | As built dimension of #2B RSG | 0 |
| UGNR-SON3-RSG-001 | Tubesheet | 0 |
| UGNR-SON3-RSG-018 | Unacceptable local diameter change of Tube holes | 2 |
| UGNR-SON3-RSG-024 | Some Gaps between Tubes and AVBs are larger than the criterion | 1 |
| UGNR-SON3-RSG-030 | Some gaps between tubes and AVBs are larger than the criterion | 0 |

| Number | Title | Revision/Date |
|---|---|---|
| UGNR-SON3-RSG-051 | Divider Plate Weld Crack | 16 |
| UGNR-SON3-RSG-052 | Divider Plate Weld Crack | 19 |
| UGNR-SON3-RSG-057 | Extension of Tubesheet PWHT Duration | 1 |
| UGNR-SON3-RSG-059 | Out of Tolerance dimensions on Primary Inlet/Outlet Nozzles and Support Skirt | 1 |
| UGNR-SON3-RSG-062 | Out of tolerance dimensions on Primary Inlet/Outlet Nozzles and Support Skirt (#B RSG) | 1 |
| UGNR-SON3-RSG-067 | UT indications in the Alloy 600/690 butter of Divider Plate Weld Groove | 0 |
| UGNR-SON3-RSG-074 | As built dimensions of #3A RSG (Overall Height) | 0 |
| UGNR-SON3-RSG-075 | As built dimension of #3A RSG | 1 |
| UGNR-SON3-RSG-076 | As built dimension of #3B RSG | 0 |
| UHNR-SON3-RSG-07N001 | Divider Plates for Unit 3 | 0 |
| Heat Treatment Record 40010SG-B-900D-R1-68 | Heat Treatment Chart for SG3 | April 4, 2012 |
| SO23-617-1-M149 | Purchase Specification for Heat Transfer Tubing | 4 |
| Fabrication Process Sheet 3901-SG-A-400E (Order 2563901/G101) | Rework of AVB Insertion for SONGS Unit 2 Replacement Steam Generator #A – Lower Portion | 1 |
| Fabrication Process Sheet | Helium Leak Test for SONGS Unit 2 Replacement Steam | 0 |

| Number | Title | Revision/Date |
|---|---|---|
| 3901-SG-A-400D (Order 2563901/2300) | Generator #A – Lower Portion | |
| TSN-5050 | Control Document Status list For Alloy 690 SG Tubing | 2 |
| TSN-5051 | Program of Preproduction Qualification (PPQ) For Alloy 690 SG Tubing | 3 |
| TSN-5053 | Melting Procedure for Alloy 690 SG Tubing | 0 |
| TSN-5054 | Identification and Traceability Procedure for Alloy 690 SG Tubing | 2 |
| TSN-5055 | Prohibited and Detrimental Material Control Procedure for Alloy 690 SG Tubing | 0 |
| TSN-5072 | Sampling Test Specimen Procedure for Alloy 690 SG Tubing | 2 |
| TSN-5073 | Chemical Analysis Procedure for Alloy 690 SG Tubing | 1 |
| TSN-5074 | Inclusion Test Procedure for Alloy 690 SG Tubing | June 4, 2005 |
| 005F-No.4316 | PPQ Test Results of Alloy 690 SG Tubing for San Onofre Nuclear Generating station Unit 2&3 | 2 |
| 4009-3ir01 | Moody International Ltd Inspection Report of Sumitomo Metal Industries | September 28, 2005 |

## SEQUENCE OF EVENTS

### San Onofre Nuclear Generating Station, Unit 2 and 3 Steam Generators

| Date | Event Description |
|---|---|
| November 2001 | Licensee forms a team to study the viability of replacing the steam generators |
| May 7, 2002 | Vendor benchmarking commences |
| July 2002 | Bechtel replacement study complete |
| November 7, 2003 | Replacement steam generator specification complete |
| December 12, 2003 | Replacement steam generator specification sent to procurement office |
| December 21, 2003 | Replacement steam generator request for proposal issued |
| February 17, 2004 | Bechtel installation study report completed |
| February 27, 2004 | Steam generator replacement request filed with California Public Utility Commission |
| February 27, 2004 | Replacement steam generator bids received by SCE |
| July 28, 2004 | Replacement steam generator vendor selected |
| August 2, 2004 | Replacement steam generator bid evaluation review board start |
| September 13, 2004 | Replacement steam generator bid evaluation completed |
| September 16, 2004 | SCE Board of Directors approval for Mitsubishi to design and manufacture steam generators |
| September 30, 2004 | Replacement steam generator contract signed |
| September 30, 2004 | Fabrication of Unit 2 and Unit 3 steam generators commences at Mitsubishi |
| November 2004 | SCE performs first full quality assurance audit of Mitsubishi |
| March 2, 2005 | Replacement steam generator installation specification sent to procurement office |
| March 17, 2005 | Mitsubishi/SCE anti-vibration bar design discussion |
| March 2005 | SCE performs follow-up surveillance audit of Mitsubishi |
| March 23, 2005 | SCE places conditional qualification on Mitsubishi |

| | |
|---|---|
| September 21, 2005 | Final environmental impact report released to public |
| October 2005 | SCE performs follow-up quality assurance audit of Mitsubishi |
| December 15, 2005 | California Public Utility Commission approval received |
| December 15, 2005 | Installation contract signed with Bechtel |
| February 2006 | SCE performs follow-up quality assurance audit of Mitsubishi |
| March 10, 2006 | Edison International Company Board of Directors approval of steam generator replacement project |
| April 22, 2006 | SONGS Unit 2 refueling outage completed |
| May 1, 2006 | Replacement steam generator transportation specification issued |
| May 10, 2006 | SCE removes conditional qualification from Mitsubishi |
| September 27, 2006 | Sumitomo Metal Industries issues a non-conformance report on some tubing for non-conformance to specifications associated with the final mill annealing process |
| September 27, 2006 | Mitsubishi issues stop work order to Sumitomo |
| September 28, 2006 | Mitsubishi issues corrective action request to Sumitomo based on the final mill annealing non-conformance report |
| September 29, 2006 | Mitsubishi visits Sumitomo to conduct root cause investigation |
| October 3, 2006 | Mitsubishi visits Sumitomo to confirm the adequacy of the corrective actions taken to address the root cause findings from the September 29, 2006 meeting |
| October 3, 2006 | Mitsubishi releases stop work order after confirming adequacy of Sumitomo's corrective actions |
| November 10, 2006 | Non-conformance report associated with final mill annealing process is closed |
| March 12, 2007 | Corrective action request associated with the final mill annealing non-conformance report closed |
| May 8, 2007 | Mitsubishi performs followup audit at Sumitomo and issues corrective action request for two findings in the audit |
| July 17, 2007 | Sumitomo submits corrective actions taken for the findings of the May 8, 2007 audit; Mitsubishi closes corrective action request. |
| September 13, 2006 | Mitsubishi/SCE technical meeting regarding anti-vibration bars |

| | |
|---|---|
| April 2008 | Fabrication of Unit 2 steam generators complete |
| April – June 2008 | Mitsubishi performs primary and secondary side hydrostatic pressure tests of Unit 2 steam generators |
| July 4, 2008 | AREVA performs baseline pre-service eddy current examinations on steam generator 2E0-89 at Mitsubishi facilities in Kobe, Japan |
| July 18, 2008 | AREVA performs baseline pre-service eddy current examinations on steam generator 2E0-88 at Mitsubishi facilities in Kobe, Japan |
| July 18, 2008 | NRC Inspection Report 99901030/2008-201 was issued. An inspection was completed at the Mitsubishi facility in Kobe, Japan. No violation or non-conformances were identified. |
| September and October 2008 | Final inspection for Unit 2 steam generators is completed. Primary and secondary sides filled with nitrogen. |
| December 16, 2008 | Unit 2 steam generators shipped from Kobe, Japan |
| February 14, 2009 | Unit 2 steam generators arrive at SONGS |
| Early March 2009 | Fabrication of Unit 3 steam generators complete |
| Middle March 2009 | Primary and secondary hydrostatic pressure tests conducted on Unit 3 steam generators |
| March 18, 2009 | Unit 3 divider plate weld failure discovered |
| March – July 2009 | Root cause evaluation of the divider plate-to-tubesheet weld conducted by Mitsubishi |
| March – June 2009 | Repair procedures developed for Unit 3 steam generators |
| June 2009 | Repair work on Unit 3 steam generators commences |
| July 2009 | AREVA performs final pre-service eddy current examinations on Unit 2 steam generators at SONGS |
| September 2009 – April 2010 | Unit 2 performs a refueling outage and installs the replacement steam generators |
| March 29, 2010 | Repair work to Unit 3 steam generator 3E0-89 complete |
| April 5, 2010 | Repair work to Unit 3 steam generator 3E0-88 complete |
| April 2010 | Unit 2 recommences power operations |
| April 18, 2010 | Unit 3 steam generator 3E0-89 passes primary side hydrostatic pressure retest |

| | |
|---|---|
| April 24, 2010 | Unit 3 steam generator 3E0-88 passes primary side hydrostatic pressure retest |
| June 2010 | AREVA performs baseline pre-service eddy current examinations on Unit 3 steam generators at Mitsubishi facilities in Kobe, Japan |
| August 2, 2010 | Unit 3 steam generators shipped |
| October 4, 2010 | Unit 3 steam generators arrive at SONGS |
| October 2010 – February 2011 | Unit 3 performs a refueling outage and installs the replacement steam generators |
| February 2011 | Unit 3 recommences power operations |
| January 10, 2012 | Unit 2 refueling outage start |
| January 31, 2012 | Unit 3 tube leak; rapid shutdown commences |
| February 2, 2012 | Unit 3 reaches cold shutdown conditions |
| February 12, 2012 | Unit 3 eddy current inspections commence on both steam generators |
| March 13, 2012 | In-situ pressure testing commences on tubes in steam generator 3E0-88 of Unit 3 |
| March 14, 2012 | In-situ pressure test failures on tubes located in Row 106 Column 78, Row 102 Column 78, and Row 104 Column 78 of steam generator 3E0-88 |
| March 15, 2012 | In-situ pressure test failures on tubes located in Row 100 Column 80, Row 107 Column 77, Row 101 Column 81, and Row 98 Column 80 of steam generator 3E0-88 |
| March 16, 2012 | In-situ pressure test failure on tube located in Row 99 Column 81 of steam generator 3E0-88 |
| March 16 – 21, 2012 | The 65 remaining tubes in steam generator 3E0-88 pass in-situ pressure testing |
| March 15 – 21, 2012 | The 56 identified tubes in steam generator 3E0-89 of Unit 3 are in-situ pressure tested and all tubes passed. |
| March 19 – 29, 2012 | NRC Augmented Inspection Team performs inspections at SONGS |
| March 23, 2012 | NRC received a letter from SCE outlining their commitments for corrective actions prior to restart of both Unit 2 and Unit 3 |
| March 27, 2012 | NRC issues a Confirmatory Action Letter to SCE |

| | |
|---|---|
| June 18, 2012 | NRC conducts public Augmented Inspection Team exit meeting near SONGS |

UNITED STATES
NUCLEAR REGULATORY COMMISSION
REGION IV
1600 EAST LAMAR BLVD
ARLINGTON, TEXAS 76011-4511

July 18, 2012

Mr. Peter Dietrich
Senior Vice President and
Chief Nuclear Officer
Southern California Edison Company
San Onofre Nuclear Generating Station
P.O. Box 128
San Clemente, CA 92674-0128

SUBJECT: SAN ONOFRE NUCLEAR GENERATING STATION – NRC AUGMENTED INSPECTION TEAM REPORT 05000361/2012007 and 05000362/2012007

Dear Mr. Dietrich:

The U. S. Nuclear Regulatory Commission (NRC) completed an inspection at your San Onofre Nuclear Generating Station (SONGS). The enclosed report documents the inspection results, which were discussed with you and other members of your staff during a public exit meeting on June 18, 2012.

~~Unit 3 had been operating for approximately one year following replacement of the steam generators when control room operators received alarms on January 31, 2012, that indicated reactor coolant was leaking into steam generator 3E0-88. The leak was unexpected, and the licensee responded in accordance with their procedures to perform a rapid shutdown, since the leak, although small, had increased enough in a short period of time to warrant the precautionary shutdown. The estimated leak rate was 75 gallons per day. The facility license allows full power operation with a steady leak rate of less than 150 gallons per day.~~

~~The first indication of the leak was main condenser air ejector radiation monitors reaching their alarm set point. The radiation monitors continuously sample from a vent stack for the purpose of rapidly identifying steam generator tube leaks. This was a direct release of radioactivity to the atmosphere, which is allowed by the facility license, up to limits in the regulations. The licensee reviewed the amount of gaseous radioactivity released and estimated a dose of approximately 0.0000452 mrem to a member of the public. The annual regulatory limit to a member of the public is 100 mrem per year. During a radiation protection inspection the week of February 13, 2012, the team reviewed the licensee dose estimates and did not identify any issues.~~

~~Unit 3 control room operators performed a controlled shutdown of Unit 3 on January 31, 2012, and reached cold shutdown conditions on February 2, 2012. The operators then prepared the steam generators for tube inspections, which were started on February 12, 2012. The first~~

~~inspection confirmed the location of the leak in steam generator 3E0-88. One tube was found with a small leak and no other tubes were leaking.~~

~~The licensee completed an extensive and expanded eddy current inspection of 100 percent of the steam generator tubes in both Unit 3 steam generators. Following pre-established testing requirements, the licensee identified 129 tubes in Unit 3 (56 tubes in steam generator 3E0-89 and 73 tubes in steam generator 3E0-88) that required in-situ pressure testing. This testing began on March 13, 2012, and was performed under ambient conditions.~~

~~Of the 129 tubes tested, a total of 8 tubes failed in-situ pressure testing. All of the failed tubes occurred in steam generator 3E0-88. Three of the tubes failed at or below a test pressure (3200 psi) equivalent to a design basis main steam line break differential pressure and temperature. The remaining five tubes failed near, but below the maximum differential test pressure of 5250 psig. This test pressure was equivalent to the minimum burst pressure capacity required by the plant technical specifications.~~

~~In accordance with Management Directive 8.3, "NRC Incident Investigation Program," deterministic and conditional risk criteria were used to evaluate the level of NRC response for this operational event. This event met three deterministic criteria (involved a major deficiency in design having potential generic safety implications; led to a significant loss of integrity of the primary coolant pressure boundary; and, involved an emergency or non-emergency event or situation, related to the health and safety of the public or on-site personnel or protection of the environment, for which a 10 CFR 50.72 report has been submitted that is expected to cause significant, heightened public or government concern) and the conditional large early release probability for the event was estimated to be in the overlap range for a special inspection/augmented inspection. Based on deterministic criteria being met and the risk assessment of this condition, Region IV, in consultation with the Office of Nuclear Reactor Regulation and Office of Nuclear Security and Incident Response, concluded that the NRC response should be an augmented team inspection.~~

The Augmented Inspection Team (AIT) was established to review the causes, safety implications, and your staff's actions following an event that occurred on January 31, 2012, involving a reactor coolant leak identified in a Unit 3 steam generator and a subsequent identification that multiple steam generator tubes in Unit 3 had experience substantial and unusual wear, eight of which failed pressure testing. The SONGS Unit 3 steam generators were new and had been in operation for less than one operating cycle. At the time of the event, SONGS Unit 2 was shutdown in a refueling outage with steam generators that had been in service for one operating cycle.

This augmented inspection was chartered~~, in part,~~ to ~~identify~~review the circumstances surrounding the tube degradation; review the licensee's actions following discovery of the conditions; evaluate the licensee's ~~review~~determination of ~~potential~~the causes of the unusual steam generator tube wear; review the steam generator modeling; and, assess the differences between Unit 2 and Unit 3 steam generators. The charter is available in ADAMS at ML12075A258. It is not the responsibility of an AIT to determine compliance with the NRC rules and regulations or to recommend enforcement actions, this will be done through subsequent NRC inspection or review.

~~Based on inspection, the~~ The team concluded that~~: (1)~~ plant operators responded to the ~~event~~January 31, 2012, steam generator tube leak in accordance with procedures and in a manner that protected public health and safety~~; (2)~~. Plant safety systems ~~were maintained and responded in accordance with the plant design; and (3) the loss of steam generator tube integrity was a serious safety issue that must be resolved. The purpose of this inspection was to gather facts and identify issues requiring followup, and,~~worked as ~~such, no findings were~~expected during the event.

The NRC team identified~~. Ten~~ ten items requiring additional ~~followup~~ review for regulatory action. These items are documented as "unresolved" items in the enclosed report. The NRC will conduct subsequent inspections or reviews to determine what, if any, regulatory actions result from the "unresolved" items.

SONGS Unit 3 steam generators had experienced excessive vibration of tubes in the U-bend region of the steam generators to the extent that the tubes rubbed against each other (tube-to-tube interactions) causing excessive wear and loss of structural integrity. Your staff determined that the vibration was caused by the steam conditions in the U-bend region of the steam generators by a phenomenon called "fluid elastic instability." The NRC inspection team concluded that the steam generators' design and configuration did not provide the necessary margin to prevent this phenomenon.

Although the steam generator tube degradation from this phenomenon observed in Unit 2 steam generators was not as severe, the NRC team concluded that both units' steam generators were of similar design with similar thermal hydraulic conditions and configurations. Therefore, SONGS Unit 2 steam generators are also susceptible to this phenomenon.

Accordingly, as documented in NRC Confirmatory Action Letter dated March 27, 2012, (ML12087A323), you are required to submit in writing to NRC for review and acceptance, your actions and plans to prevent recurrence of loss of tube integrity before the resumption of power operations in both SONGS Units 2 and 3.

In accordance with 10 CFR 2.390 of the NRC's "Rules of Practice," a copy of this letter, its enclosure, and your response (if any) will be available electronically for public inspection in the NRC Public Document Room or from the Publicly Available Records (PARS) component of the NRC's document system (ADAMS). ADAMS is accessible from the NRC Web site at http://www.nrc.gov/reading-rm/adams.html (the Public Electronic Reading Room).

Sincerely,

/RA/

Elmo E. Collins
Regional Administrator

Docket No.: ~~0500036250~~-361, 50-362
License No: NPF-10, NPF-15

Enclosure:
1. Inspection Report 05000361/2012007 and 05000362/~~2012-007~~2012007
~~w/~~
Attachment~~:~~(s):
1. Supplemental Information

2. Sequence of Events

cc w/ encl: Electronic Distribution

DISTRIBUTION:

Regional Administrator (Elmo.Collins@nrc.gov)
Deputy Regional Administrator
(Art.Howell@nrc.gov)
DRP Director (Kriss.Kennedy@nrc.gov)
DRP Deputy Director
(~~Troy.Pruett~~Allen.Howe@nrc.gov)
DRS Director (Tom.Blount@nrc.gov)
DRS Deputy Director (Patrick.Louden@nrc.gov)
Senior Resident Inspector
(Greg.Warnick@nrc.gov)
Resident Inspector (John.Reynoso@nrc.gov)
SONGS Administrative Assistant
(Heather.Hutchinson@nrc.gov)
Branch Chief, DRS/PSB2
(Greg.Werner@nrc.gov)
Branch Chief, DRP/D (Ryan.Lantz@nrc.gov)
Senior Project Engineer, DRP/D
(Nick.Taylor@nrc.gov)
Project Engineer, DRP/D (David.You@nrc.gov)
Project Engineer, DRP/D (Brian.Parks@nrc.gov)
Public Affairs Officer (Victor.Dricks@nrc.gov)
Public Affairs Officer (Lara.Uselding@nrc.gov)
Branch Chief, DRS/TSB
(~~Ryan.Alexander~~Ray.Keller@nrc.gov)

RITS Coordinator (Marisa.Herrera@nrc.gov)
Regional Counsel (Karla.Fuller@nrc.gov)
Congressional Affairs Officer
(Jenny.Weil@nrc.gov)
OEMail Resource
RIV/ETA: OEDO (Michael.McCoppin@nrc.gov)
DRS/TSB STA (Dale.Powers@nrc.gov)
RSLO (Bill.Maier@nrc.gov)
D/DIR, DORL (Louise.Lund@nrc.gov)
PM (Randy.Hall@nrc.gov)
D: NRR (Eric.Leeds@nrc.gov)
D: NSIR (Jim.Wiggins@nrc.gov)
D: NRO
(~~Michael.Johnson~~Glen.Tracy@nrc.gov)
NRR/LPL4 (Michael.Markley@nrc.gov)
NRR/IOEB (Harold.Chernoff@nrc.gov)
NRR/DORL (Doug.Broddus@nrc.gov)
EDO (Bill.Borchardt@nrc.gov)
DEDR
(~~Martin.Virgilio~~Michael.Johnson@nrc.gov)

DOCUMENT NAME: S:DRS\REPORTS\SONGS 2012007 AIT-GEW ~~ML~~
ADAMS Accession No.: **ML12188A748**

| SUNSI Rev Compl. | ☑Yes ☐ No | ADAMS | ☑Yes ☐ No | Reviewer Initials | GEW |
|---|---|---|---|---|---|
| Publicly Avail. | ☑Yes ☐ No | Sensitive | ☐Yes ☑ No | Sens. Type Initials | GEW |

| ~~AIT Member/RIV~~DRS/PSB1 | AIT Member/~~RII~~RIV | AIT Member/~~NRO~~RII | AIT Member/~~NRR~~NRO | AIT Member/NRR | AIT Member/~~RES~~NRR |
|---|---|---|---|---|---|
| ~~JReynose~~GWerner | ~~JRivera-Ortiz~~JReynoso | ~~JOrtega-Luciano~~JRivera-Ortiz | ~~EMurphy~~JOrtega-Luciano | ~~AJohnson~~EMurphy | ~~CThurston~~AJohnson |
| GEW /RA/ | Per e-mail | Per e-mail | Per e-mail | Per e-mail | Per e-mail |
| 07/—09/12 | 07/—10/12 | 07/—09/12 | 07/—09/12 | 07/—12/12 | 07/—12/12 |
| AIT ~~Team Leader/RIV~~Member/RES | ~~D:DRS~~SRA/RIV | ~~RA~~AIT Team Leader/RIV | D:DRS | | RA |
| ~~GWerner~~CThurston | ~~TBlount~~MRunyan | ~~ECollins~~GWerner | TBlount | | ECollins |
| Per e-mail | Per e-mail | GEW /RA/ | TB - /RA/ | | /RA/ |
| 07/—11/12 | 07/—12/12 | 07/—12/12 | 07/13/2012 | | 07/18/2012 |

OFFICIAL RECORD COPY

~~ENCLOSURE~~DIR, DORL
Michele.Evans@nrc.gov
DIR, DIRS Ho.Nieh@nrc.gov

D/DIR, DIRS John.Lubinski@nrc.gov

## EXECUTIVE SUMMARY

On March 19, 2012, an Augmented Inspection Team (AIT) was dispatched to San Onofre Nuclear Generating Station to gather facts and understand the circumstances surrounding the January 31, 2012 Unit 3 primary–to-secondary leak and failure of eight steam generator tubes to maintain structural integrity as required by plant technical specifications during testing the week of March 13, 2012. The primary-to-secondary leak was the result of a single tube in Unit 3 steam generator 3E0-88 failing to maintain structural integrity.

Specifically the AIT was chartered to review the circumstances surrounding the tube degradation; review the licensee's actions following discovery of the conditions; evaluate the licensee's determination of the causes of the unusual steam generator tube wear; review the steam generator modeling; and, assess the differences between Unit 2 and Unit 3 steam generators.

The team determined that plant operators responded to the event in a manner that protected public health and safety and all safety systems performed their functions to support the safe shutdown and cooldown of the plant. However, the loss of steam generator tube integrity is a serious safety issue that must be resolved prior to further power operation.

The AIT identified ten unresolved items that warranted additional follow-up: (1) adequacy of the post trip/transient procedure; (2) evaluation and disposition of the Unit 3 loose parts monitor alarms; (3) design of retainer bar; (4) control of original design dimensions; (5) evaluation of and controls for divider plate repair; (6) atmospheric controls of Unit 3 steam generators during shipment; (7) no tube bundle support used during shipping; (8) evaluation and disposition of accelerometer readings during shipping; (9) adequacy of Mitsubishi's thermal-hydraulic model; and (10) change of methodologies associated with 10 CFR 50.59 review. Consistent with existing NRC inspection processes, these unresolved issues will be inspected and dispositioned during follow-up inspection efforts to determine if there are any violations of regulatory requirements.

The AIT inspection concluded that: (1) SCE was adequately pursuing the causes of the unexpected steam generator tube-to-tube degradation. In an effort to identify the causes, SCE retained a significant number of outside industry experts, consultants, and steam generator manufacturers, including Westinghouse and AREVA to perform thermal-hydraulic and flow induced vibration modeling and analysis; (2) The combination of unpredicted, adverse thermal hydraulic conditions and insufficient contact forces in the upper tube bundle caused a phenomenon called "fluid-elastic instability" which was a significant contributor to the tube to tube wear resulting in the tube leak. The team concluded that the differences in severity of the tube-to-tube wear between Unit 2 and Unit 3 may be related to the changes to the manufacturing/fabrication of the tubes and other components which may have resulted in increased clearance between the anti-vibration bars and the tubes; (3) Due to modeling errors, the SONGS replacement generators were not designed with adequate thermal hydraulic margin to preclude the onset of fluid-elastic instability. Unless changes are made to the operation or configuration of the steam generators, high fluid velocities and high void fractions in localized regions in the u-bend will continue to cause excessive tube wear and accelerated wear that could result in tube leakage and/or tube rupture; (4) The thermal hydraulic phenomena

contributing to the fluid-elastic instability is present in both Unit 2 and 3 steam generators; (5) Based on the updated final safety analysis report description of the original steam generators, the steam generators major design changes were appropriately reviewed in accordance with the 10 CFR 50.59 requirements. However, further review is required related to the change in methodology used for the steam generator stress analysis calculations.

With regard to the radiological release as a result of the tube leak, it was determined that the tube leak was detected by the condenser steam jet air ejector radiation monitor as per design. In addition, the radiation monitor alarmed and alerted SONGS operators of the steam generator tube leak as required. The release resulted in an estimated 0.0000452 (4.52 E-5) mrem dose to the public.

TABLE OF CONTENTS


EXECUTIVE SUMMARY ..... i

SUMMARY OF FINDINGS ..... 4

1.0 Description of Event (Charter Item 1) ..... - 3 -

1.1 Sequence of Events ..... - 3 -

1.2 System Descriptions ..... - 6 -

1.3 Resident Inspectors' Assessment of Steam Generator Tube Leak Event Response ..... - 7 -

1.4 Description of Steam Generator Inspections at SONGS Unit 2 ..... - 11 -

1.5 Description of Steam Generator Inspections at SONGS Unit 3 ..... - 13 -

1.6 In-Situ Pressure Testing ..... - 15 -

2.0 Probable Cause Evaluation (Charter Item 2) ..... - 17 -

2.1 SCE Cause Evaluation ..... - 18 -

2.2 Mitsubishi Cause Evaluation ..... - 19 -

3.0 Operational Differences in Configuration and Operation between Unit 2 and 3 (Charter item 3) ..... - 22 -

4.0 Design and Manufacturing Differences (Charter Item #4) (Mitsubishi Charter Item 1) ..... - 24 -

5.0 Quality Assurance/Quality Control (Charter Item 5) (Mitsubishi Charter Item 4) - 39 -

5.1 SONGS Quality Assurance/Quality Control ..... - 39 -

5.2 Mitsubishi Quality Assurance/Quality Control ..... - 41 -

5.3 Quality Assurance Conclusion ..... - 43 -

6.0 Implementation of Steam Generator Industry Information (Charter Item 6) (Mitsubishi Charter Item 3) ..... - 43 -

7.0 Packing, Shipping, Handling, and Receipt Inspection (Charter Item 7) ..... - 47 -

8.0 Thermal-hydraulic and Flow Induced Vibration Modeling (Charter Item 8) ..... - 50 -

9.0 Risk Assessment (Charter Item 9) ..... - 63 -

10.0 Assess Quality Assurance, Radiological Controls, and Safety Culture Components (Charter Item 10) ..... - 63 -

11.0 Operational impacts from Unit 3 to Unit 2 (Charter Item 11) ..... - 65 -

12.0 Divider Plate Manufacturing and Weld Issues (Mitsubishi Charter Item 2) ..... - 66 -

13.0 Office of Nuclear Reactor Regulation (NRR) Review of SONGS 50.59 Evaluation - 71 -

14.0 Exit Meeting Summary ..... - 73 -

ATTACHMENT 1 SUPPLEMENTAL INFORMATION ..... A1 - 1 -

ATTACHMENT 2 SEQUENCE OF EVENTS ..... A2 - 1 -

**U.S. NUCLEAR REGULATORY COMMISSION**
**REGION IV**

| | |
|---|---|
| Docket: | ~~0500036~~250-361, 50-362 |
| License: | NPF-10, NPF-15 |
| Report: | 05000361/2012007 and 05000362/2012007 |
| Licensee: | Southern California Edison Company |
| Facility: | San Onofre Nuclear Generating Station, Unit 2 and 3 |
| Location: | 5000 S. Pacific Coast Hwy<br>San Clemente, California |
| Dates: | March 15 through June 18, 2012 |
| Team Leader: | G. Werner, RIV/Branch Chief/Plant Support Branch 2 |
| Inspectors: | A. Johnson, NRR/Materials Engineer<br>E. Murphy, NRR/Senior Materials Engineer<br>J. Ortega-Luciano, NRO/Reactor Operations Engineer<br>J. Reynoso, RIV/Resident Inspector<br>J. Rivera-Ortiz, RII/Senior Reactor Inspector<br>C. Thurston, RES/Reactor Systems Engineer |
| Approved By: | Elmo E. Collins, Regional Administrator |

TABLE OF CONTENTS


SUMMARY OF FINDINGS ..... 1

EXECUTIVE SUMMARY ..... 1

1.0 Description of Event (Charter Item 1) ..... 1

1.1 Sequence of Events ..... 1

1.2 System Descriptions ..... 1

1.3 Resident Inspectors' Assessment of Steam Generator Tube Leak Event Response ..... 12

1.4 Description of Steam Generator Inspections at SONGS Unit 2 ..... 1

1.5 Description of Steam Generator Inspections at SONGS Unit 3 ..... 1

1.6 In-Situ Pressure Testing ..... 1

2.0 Probable Cause Evaluation (Charter Item 2) ..... 1

2.1 SONGS Cause Evaluation ..... 1

2.2 Mitsubishi Cause Evaluation ..... 1

3.0 Operational Differences in Configuration and Operation Between Unit 2 and 3 (Charter Item 3) ..... 1

4.0 Design and Manufacturing Differences (Charter Item #4) (Mitsubishi Heavy Industries Charter Item 1) ..... 1

5.0 Quality Assurance/Quality Control (Charter Item 5) (Mitsubishi Charter Item 4) ..... 1

5.1 SONGS Quality Assurance/Quality Control ..... 1

5.2 Mitsubishi Heavy Industries Quality Assurance/Quality Control ..... 1

5.3 Quality Assurance Conclusion ..... 1

6.0 Implementation of Steam Generator Industry Information (Charter Item 6) (Mitsubishi Heavy Industries Charter Item 3) ..... 1

7.0 Packing, Shipping, Handling, and Receipt Inspection (Charter Item 7) ..... 1

8.0 Thermal-hydraulic and Flow Induced Vibration Modeling (Charter Item 8) ..... 50

8.1 Thermal-hydraulic Assessments ..... 1

8.2 NRC ATHOS Results ..... 1

8.3 Conclusion ..... 1

9.0 Risk Assessment (Charter Item 9) ..... 1

10.0 Assess Quality Assurance, Radiological Controls, and Safety Culture Components (Charter Item 10) ..... 1

11.0 Operational impacts from Unit 3 to Unit 2 (Charter Item 11) ..... 1

12.0 Mitsubishi Divider Plate Manufacturing and Weld Issues (Mitsubishi Heavy Industries Charter Item 2) ..... 1

13.0 Office of Nuclear Reactor Regulation Review of SONGS 50.59 Evaluation ..... 1

14.0 Exit Meeting Summary ..... 1

~~ATTACHMENT 1: SUPPLEMENTAL INFORMATION ..... A1-1~~
~~ATTACHMENT 2: SEQUENCE OF EVENTS ..... A2-1~~

## SUMMARY OF FINDINGS

IR 05000361/2012007,

## ~~SUMMARY OF FINDINGS~~

~~IR~~ 05000362/2012007, 03/15/2012 through 06/18/2012, San Onofre Nuclear Generating Station; Augmented Inspection Team.

An Augmented Inspection Team was approved on March 16, 2012. Two inspectors on the team were onsite observing in-situ pressure testing the week of March 12. The remaining inspectors were dispatched to the site on March 19, 2012, to assess the facts and circumstances surrounding the tube leak and unexpected wear of tubes in Unit 3 steam generators. The Augmented Inspection Team was established in accordance with NRC Management Directive 8.3, "NRC Incident Investigation Program," and implemented using Inspection Procedure 93800, "Augmented Inspection Team." The inspection was conducted by a team of inspectors from the NRC's Region IV and Region II offices, the resident inspector from San Onofre Nuclear Generating Station, one engineer from the NRC Office of New Reactors, two engineers from the NRC Office of Nuclear Reactor Regulation, and one engineer from the NRC Office of Research. The team identified 10 issues that will require additional NRC inspection. These issues are tracked as unresolved items in this report.

A. NRC-Identified and Self-Revealing Findings

None

B. Licensee-Identified Violations

None

## EXECUTIVE SUMMARY

On January 31, 2012, San Onofre Nuclear Generating Station (SONGS) Unit 3 control room operators received an alarm that indicated a primary-to-secondary reactor coolant leak from steam generator 3E0-88. Although the leak rate was small, it increased enough in a short period of time for the licensee to perform a rapid shutdown. The estimated leak rate was 75 gallons per day. The facility license allows full power operation with a steady state leak rate of less than 150 gallons per day. On February 2, 2012, Unit 3 reached cold shutdown conditions.

On February 12, 2012, Southern California Edison (SCE) commenced eddy current inspections of 100 percent of the tubes in both Unit 3 steam generators. During these inspections, the licensee discovered unexpected wear in both steam generators, including wear at retainer bars (similar to the wear found in Unit 2 steam generators) and significant tube-to-tube wear in the free span areas. The inspections identified 56 tubes in steam generator 3E0-89 and 73 tubes in steam generator 3E0-88 that SCE performed in-situ pressure testing on to determine if they meet the structural integrity requirements in plant technical specifications.

From March 13 – 21, 2012, AREVA conducted in-situ pressure testing of the suspect tubes in both steam generators. There were a total of eight tube failures during testing, all in steam generator 3E0-88. These tubes failed to satisfy the tube integrity performance criteria. At the time of the augmented inspection team inspection, no stabilization or plugging of tubes had been performed in Unit 3 because the licensee was still conducting a cause evaluation of the failed tubes. There were two members of the Augmented Inspection Team on-site during the week of March 12 that observed portions of the in-situ pressure testing.

On March 23, 2012, NRC received a letter from SCE outlining their commitments for corrective actions prior to restart of both Unit 2 and Unit 3.

On March 27, 2012, the NRC issued a Confirmatory Action Letter to SCE, which outlined specific actions the licensee must complete before restarting Units 2 and 3 that included indentifying the cause of the tube wear; taking corrective actions to prevent loss of tube integrity; and performing a mid-cycle outage to perform tube inspections.

From March 19 – 29, 2012, the NRC Augmented Inspection Team performed on-site inspections at SONGS. After the on-site portion was completed, the team continued to review various documents and attended a number of expert panels associated with the cause evaluations, thermal/hydraulic modeling, and Unit 2 operational assessment. The team identified ten unresolved items that warranted additional followup: (1) adequacy of the post trip/transient procedure; (2) evaluation and disposition of the Unit 3 loose parts monitor alarms; (3) design of retainer bar; (4) control of original design dimensions; (5) evaluation of and controls for divider plate repair; (6) atmospheric controls of Unit 3 steam generators during shipment; (7) no tube bundle support used during shipping; (8) evaluation and disposition of accelerometers; (9) adequacy of Mitsubishi's thermal-hydraulic model; and (10) change of methodologies associated with 10 CFR 50.59 review.

The team's findings included: (1) plant operators responded to the event in accordance with procedures in a manner that protected public health and safety; (2) equipment responded in accordance with the plant design; and (3) the cause evaluations for Unit 2 and Unit 3 tube wear were appropriate.

~~At the time of the leak on Unit 3 steam generator 3E0-88, Unit 2 had completed eddy current testing of all the tubes in both steam generators as part of their first refueling outage subsequent to the steam generators being replaced in 2009. The eddy current testing did identify significant tube wear around the upper retainer bar, with one tube requiring in-situ pressure testing. Wear indications were found at anti-vibration bar supports, tube support plates and at a foreign object (that was removed). Southern California Edison did determine the cause of tube wear in Unit 2 to be from vibration of the tubes against the retainer and anti-vibration bars. Initially, no tube-to-tube wear was identified. Because of the extensive tube-to-tube wear identified on Unit 3, SCE conducted additional eddy current testing on 1375 tubes on each Unit 2 steam generator. This testing was completed using a more sensitive probe in the same area where tube-to-tube wear was identified on Unit 3. The licensee identified that two tubes in Unit 2 exhibited tube-to-tube wear similar to the wear identified in Unit 3 steam generators. Initially, these findings resulted in a total of 94 plugged tubes, with 15 tubes stabilized in steam generator 2E0-89. For steam generator 2E0-88 this initially resulted in 98 plugged tubes, with 18 tubes stabilized. Additional plugging and stabilizing was completed for Unit 2 steam generators to address the causes of tube-to-tube wear identified. The corrective actions taken to address the causes of the tube-to-tube wear will be inspected as part of the Confirmatory Action Letter and documented in Inspection Report 05000361, 362/2012009.~~

~~Overall, the team concluded that SCE was pursuing the causes of the unexpected Unit 3 steam generator tube-to-tube degradation. In an effort to identify the causes, SCE brought in a large number of outside industry experts, consultants, and steam generator manufacturers, including Westinghouse and AREVA to perform thermal-hydraulic and flow induced vibration modeling and analysis. The licensee identified the most probable causes of the tube-to-tube wear as a combination of higher than predicted thermal/hydraulic conditions and improvements in the manufacturing of the Unit 3 steam generators. The improvements in the manufacturing resulted in less contact forces between the anti-vibration bars and the tubes. The combination of these causes allowed fluid-elastic instability vibration to occur. Additional on-site inspection will be required to review and closeout the unresolved items.~~

1.0 Description of Event (Charter Item 1)

1.1 Sequence of Events

In November 2001, SCE formed a team to study the viability of replacing the Unit 2 and Unit 3 original steam generators. The licensee performed an assessment of six steam generator vendors, which included vendor benchmarking, development of the replacement steam generator design specifications, a steam generator request for proposal, and a steam generator bid evaluation. In September 2004, the licensee selected Mitsubishi Heavy Industries (Mitsubishi) as the manufacturer of the replacement steam generator.

A general description and comparison of the Unit 2 and Unit 3 steam generators is included in Section 1.2.~~1~~ of this report.

In September 2004, Mitsubishi commenced fabrication of Unit 2 steam generators 2E0-89 and 2E0-88, and completed fabrication in April 2008.

At the time of the contract signing in September 2004, Mitsubishi had a quality assurance program in place that had been approved by the licensee, by taking credit for other utilities' reviews of Mitsubishi's quality assurance program. The licensee informed Mitsubishi that once enough fabrication was underway to support an evaluation, the licensee would perform an audit to confirm that their quality assurance program was operating properly.

In November 2004, the licensee performed an audit of the Mitsubishi quality assurance program at their facilities in Kobe, Japan, and then followed up with a surveillance inspection in March 2005. As a result of these two ~~inspection~~ activities, the licensee informed Mitsubishi that additional oversight of Mitsubishi's design control activities was required. The licensee informed Mitsubishi that the additional oversight conditions would remain in place until such time that Mitsubishi had demonstrated improved design control performance, which would be verified by the licensee. After implementing the extra quality control steps, Mitsubishi submitted a letter to SCE stating that they were ready for the conditional qualification to be lifted. The licensee performed followup audits of Mitsubishi in October 2005 and February 2006, but still found enough instances of design control issues that the additional oversight requirements of the conditional qualification were not lifted. In May 2006, SCE was able to verify that Mitsubishi had demonstrated improved design control performance and therefore removed the conditional qualification of Mitsubishi.

After fabrication of the Unit 2 steam generators was complete in April 2008, Mitsubishi performed hydrostatic pressure tests of the primary and secondary sides of the Unit 2 steam generators. In July 2008, after completion of the hydrostatic pressure tests, AREVA performed the baseline eddy current pre-service examinations of the Unit 2 steam generators at the Mitsubishi facilities in Japan. The final inspections for the Unit 2 steam generators were completed in September and October 2008, followed by filling the primary and secondary sides of the Unit 2 steam generators with nitrogen. The Unit 2 steam generators were shipped from the Mitsubishi facilities in December 2008 and

received on site at SONGS in February 2009. In July 2009, AREVA performed the final eddy current pre-service examination on the Unit 2 steam generators at SONGS. The baseline and final eddy current pre-service examinations were performed in Japan and at SONGS, respectively, to assess whether any changes to the steam generator tubing had resulted from shipping, and no changes were identified.

The Unit 2 steam generators were installed during a refueling outage, between September 2009 and April 2010. On April 13, 2010, Unit 2 returned to power operations. ~~Engineering~~NRC engineering inspectors performed inspections in accordance with ~~procedures IP~~Inspection Procedure 50001, "Steam Generator Replacement Inspection," and ~~IP~~Inspection Procedure 71111.17, "Evaluations of Changes, Tests, or Experiments and Permanent Plant Modifications." This included a review of selected portions of modifications associated with the replacement steam generators to determine if the changes were done in accordance with 10 CFR 50.59. The results of the ~~inspections~~inspection of the replacement steam generators for Unit 2 are documented in NRC Inspection Report 05000361/2009007. (ML100630838)

The fabrication of the Unit 3 steam generators 3E0-89 and 3E0-88 was completed between September 2004 and April 2010. The design specifications of the Unit 2 and Unit 3 steam generators were the same when the contract between the licensee and Mitsubishi was signed; however, due to a fabrication issue, there was a modification to the divider plate-to-channel head weld requirements for the Unit 3 steam generators, and to the classification of the Unit 3 tubesheet material. The specifics of these modifications are discussed further in Section 1.2.a of this report.

In March 2009, after initial fabrication of the Unit 3 steam generators was complete, Mitsubishi performed hydrostatic pressure tests of the primary and secondary sides of the Unit 3 steam generators. After completion of the hydrostatic pressure tests, a visual inspection of the steam generator reactor coolant side revealed cracks in the welds that join the divider plate to the channel head of both steam generators.

From March through July of 2009, Mitsubishi performed a root cause evaluation, which showed that a change in the weld preparation process for the divider plate-to-channel head weld had resulted in the cracking of the weld. A repair procedure was developed and repair work on the Unit 3 steam generators began in June 2009. The repairs to the Unit 3 steam generators were completed in late March (3E0-89) and early April (3E0-88) of 2010. In late April 2010, the Unit 3 steam generators passed the primary hydrostatic pressure re-tests. In June 2010, AREVA performed a final eddy current pre-service examination of the steam generators at the Mitsubishi facilities in Japan, and this was used as the baseline pre-service examination for the Unit 3 steam generators. The steam generators were shipped from the Mitsubishi facilities in Japan in early August 2010, and arrived at SONGS in early October 2010.

The Unit 3 steam generators were installed during a refueling outage, between October 2010 and February 2011. On February 18, 2011, Unit 3 returned to power operations. ~~Engineering~~NRC engineering inspectors performed inspections in accordance with ~~procedures IP~~Inspection Procedure 50001, "Steam Generator Replacement Inspection," and ~~IP~~Inspection Procedure 71111.17, "Evaluations of Changes, Tests, or Experiments

and Permanent Plant Modifications." This included a review of selected portions of modifications associated with the replacement steam generators to determine if the changes were done in accordance with 10 CFR 50.59. The results of the ~~inspections~~inspection of the replacement steam generators for Unit 3 are documented in NRC Inspection Report-05000362/2010009. (ML111300448)

Unit 2 was shut down for a scheduled refueling outage on January 10, 2012. Steam generator tubing inspections in steam generator 2E0-89 found unexpected wear caused by retainer bars on two tubes that required plugging in accordance with the technical specifications. Steam generator tubing inspections in steam generator 2E0-88 found wear on four tubes that required plugging in accordance with the technical specifications. Anti-vibration bars caused the wear on two of the tubes and retainer bars caused the wear on the other two tubes. Because of the unexpected wear, the licensee preventatively plugged 94 tubes in steam generator 2E0-89 and 98 tubes in steam generator 2E0-88. Fifteen of the tubes in steam generator 2E0-89 were stabilized prior to plugging, and 18 of the tubes in steam generator 2E0-88 were stabilized prior to plugging. Additional details of the inspections of the Unit 2 steam generators are provided in section 1.4 of this report

On January 31, 2012, Unit 3 control room operators received an alarm that indicated a primary-to-secondary reactor coolant leak from steam generator 3E0-88. The alarm received was from the main condenser air ejector radiation monitors, which continuously samples from a vent line for the purpose of rapidly identifying steam generator tube leaks. Although the leak rate was small, it increased enough in a short period of time for the licensee to perform a rapid shutdown. The estimated leak rate was 75 gallons per day. The facility license allows full power operation with a steady state leak rate of less than 150 gallons per day. On February 2, 2012, Unit 3 reached cold shutdown conditions. The licensee reviewed the amount of gaseous radioactivity released and estimated a dose of approximately 0.0000452 mrem to a member of the public. The annual regulatory limit to a member of the public is 100 mrem per year. This unplanned offsite release of radioactivity was reviewed by Region IV health physicist inspectors who confirmed SONGS' offsite dose estimate (see Section 10 for additional details).

After shutdown, the licensee started preparations for performing inspections of Unit 3 steam generators 3E0-89 and 3E0-88. The steam generator tube inspections commenced on February 12, 2012, and confirmed the location of the leak in steam generator 3E0-88 as coming from the tube in Row 106 Column 78. No other tubes were found to be leaking. The licensee then performed eddy current inspections of 100 percent of the tubes in both Unit 3 steam generators. During these inspections, the licensee discovered unexpected wear in both steam generators, including wear at retainer bars (similar to the wear found in Unit 2 steam generators) and significant tube-to-tube wear in the freespan areas (u-bend area of the tubes). The inspections identified 56 tubes in steam generator 3E0-89 and 73 tubes in steam generator 3E0-88 that SCE performed in-situ pressure testing on to determine if they ~~meet~~met the structural integrity requirements in plant technical specifications. Additional details of the inspections of the Unit 3 steam generators are provided in section 1.5 of this report

From March 13 – 21, 2012, AREVA conducted in-situ pressure testing of the suspect tubes in both steam generators. There were a total of eight tube failures during testing,

all in steam generator 3E0-88.

These tubes failed to satisfy the tube integrity performance criteria in the technical specifications.– Additional details of the in-situ pressure tests are provided in Section 1.6 of this report.

From March 19 – 29, 2012, the NRC augmented inspection team performed inspections onsite at SONGS.

On March 27, 2012, the NRC issued a Confirmatory Action Letter to SCE, which outlined specific actions for each unit that the licensee must complete before restarting Unit 2 and Unit 3.

A more detailed sequence of events can be found in Attachment 2.

1.2 System Descriptions

a. Replacement Steam Generators

The Unit 2 and Unit 3 replacement steam generators contain thermally treated Alloy 690 tubing in a u-bend configuration, with a nominal outside diameter of 0.750 inches and a nominal wall thickness of 0.043 inches. There are 9727 tubes within each steam generator, which are arranged in 142 rows and 177 columns. The rows and columns are arranged in a nominal 1.000 inch triangular pitch (results in approximately 0.25 inches of clearance between tubes). The first thirteen rows of tubes were thermally stress relieved after bending to reduce susceptibility to stress corrosion cracking. The tubes were hydraulically expanded to the full depth of the tubesheet, which has a nominal thickness of 28.19 inches. Seven tube support plates made of Type 405 stainless steel provide lateral support to the tubes. The tube support plates contain broached trefoil holes with chamfered lands. Support of the tubes in the upper bundle is provided by six sets of Type 405 stainless steel, V-shaped, anti-vibration bars.

The original Model 3410 steam generators at Unit 2 and Unit 3 were manufactured by Combustion Engineering. Each steam generator had 9,350 mill-annealed, Alloy 600 tubes, which were a combination of u-bend tubes and tubes with two 90 degree bends (also called square bends). The tubes had a nominal outside diameter of 0.750 inches, and a nominal wall thickness of 0.048 inches. The tubes were expanded through the full depth of the tubesheet using an explosive process, and lateral support was provided by a number of lattice-grid (i.e., eggcrate) carbon steel tube supports. Tube support in the upper bundle was provided by carbon steel diagonal bars (commonly called batwings) and vertical straps. The original steam generators contained a cylindrically shaped support structure beneath the center of the tubesheet (called the stay cylinder) that provided structural support to the large diameter tubesheet.

Southern California Edison reviewed Information Notices, Generic Letters, Bulletins, and industry operational experience associated with steam generator issues when developing the design specifications for the replacement steam generators. Some of the changes are summarized below, for additional information see Section 6 of this report.

The design changes between the original and replacement steam generators noted above are commonly used in replacement steam generators today. The thermally treated Alloy 690 tubing provides increased resistance to stress corrosion cracking as compared to thermally treated Alloy 600 tubing. The use of type 405 stainless steel (in lieu of carbon steel) for tube support plates eliminates the denting phenomenon associated with drilled carbon steel support plates. The use of broached trefoil holes (instead of drilled holes) in tube support plates reduces the number of contact points with tubes and increases flow area between the tube and tube support plate, thereby reducing the potential for corrosion products to buildup between the tube and the tube support plate. Combustion Engineering steam generators with the batwing design have typically suffered from wear on tubes (from the batwings) in the central stay cylinder region, due to higher cross flow velocities in this portion of the steam generators. In an effort to eliminate this high flow region, the replacement steam generators were designed with a thicker tubesheet that was inherently more rigid, and thus did not require the central stay cylinder. By choosing a design with all u-bend tubes, the bat wing design was eliminated and a new anti-vibration bar assembly was used. The new anti-vibration bar assembly is a free floating design that is supported by the tube bundle and is not attached to the tube bundle wrapper.

b. Channel Head-to-Divider Plate Weld

On March 18, 2009, after completion of the primary and secondary side hydrostatic pressure tests, a crack in the weld between the divider plate and the channel head on Unit 3 steam generator 3E0-88 was identified . Examination showed that the dissimilar metal weld, between the Alloy 690 divider plate and the low alloy steel channel head, had separated. Specifically, the failure occurred between the channel head and the Alloy 152 butter weld, which is the weld filler wire equivalent of Alloy 690. Upon examination, a similar weld failure was found in steam generator 3E0-89 although the size of the failure was not as large.

Mitsubishi performed a root cause evaluation and found that air carbon-arc gouging was used to remove the stainless steel cladding from the channel head, in preparation for making the divider plate-to-channel head dissimilar metal weld. The air carbon-arc gouging had resulted in carbon deposits in the channel head that were not completely removed by grinding that was performed after the gouging operation. The high carbon area increased the hardness of the channel head (due to carburization) and was the most probable cause of the failure between the channel head and the Alloy 152 butter weld. Mitsubishi also found that it was possible, but less probable, that the increased hardness of the channel head promoted hydrogen induced cracking in areas of the divider plate-to-channel head weld that had higher local stresses due to geometric configurations (i.e., at the corner of the divider plate).

1.3 Resident Inspectors' Assessment of Steam Generator Tube Leak Event Response

a. Inspection Scope

On January 31, 2012, the resident inspectors were on-site during the Unit 3 steam generator tube leak event. The resident inspectors observed the licensee's response to the steam generator tube leak from the control room; and observed the rapid shutdown,

actions to cool the plant down, actions performed during recovery of plant systems, and other operator actions. Additionally, the resident inspectors conducted a review of control room activities and equipment response to determine if the operating crew responded appropriately and if the plant systems responded as expected during the event. The resident inspectors conducted interviews with various on-shift personnel and reviewed the post trip report, which included control room logs, operator statements, and plant data trends to assess overall performance of the crew. The review also included procedure use and adequacy of the guidance used for event response, placing the plant in a safe and stable condition, establishing appropriate parameter limits for plant cooldown, and conducting the cooldown to cold shutdown conditions. With respect to operator awareness and decision making, the resident inspectors were specifically focused on the effectiveness of control board monitoring, technical decision making, and work practices of the operating crew. With respect to command and control, the resident inspectors focused on actions taken by the control room supervision in managing the operating crew's response to the event.

b. Observations and Findings

~~No findings were identified.~~

The team identified one unresolved item for which additional information is required to determine if performance deficiencies exist or if the issue constitutes a violation of NRC requirements.

On January 31, 2012, at 3:05 p.m. (PST), main control room operators at Unit 3 received a secondary plant system radiation alarm associated with the air ejectors followed by a blowdown radiation monitor alarm. Operations personnel responded in accordance with Abnormal Operating Instruction SO23-13-14, "Reactor Coolant Leak," Revision 16, since the entry conditions for a steam generator tube leak were satisfied. Operations personnel determined the leakage to be about 75 gallons per day, using a mass balance calculation (.06 gpm), from steam generator 3E0-88. This leak rate was below the Technical Specification 3.4.13, "RCS Operational Leakage," limit of 150 gallons per day for primary- to-secondary leakage through any one steam generator.

At 4:10 p.m., operations personnel evaluated that the primary-to-secondary leak rate exceeded 75 gallons per day on steam generator 3E0-88 and that the leak was increasing at greater than 30 gallons per day per hour, and consequently, initiated a rapid power reduction to be ≤ 50 percent power in one hour and in Mode 3 within the next two hours per Abnormal Operating Instruction SO23-13-14. In accordance with Abnormal Operating Instruction SO23-13-14, when reactor power was less than 35 percent, operations personnel tripped the reactor at 5:31 p.m. to enter Mode 3.

Due to the manual reactor trip, operations personnel entered Emergency Operating Instruction SO23-12-1, "Standard Post Trip Actions," Revision 26, to ensure the plant was placed in a stable, safe condition, and that the plant was configured to respond to the continuing steam generator tube leak event. Operations personnel implemented the emergency operating instructions and isolated the affected steam generator at 6:00 p.m. A plant cooldown was conducted by using main steam bypass from steam generator 3E0-89 to the main condenser. Mode 4 conditions were achieved at approximately 6

hours after isolation of the steam generator. Cooldown continued until Unit 3 was in Mode 5, cold shutdown.

~~The resident inspectors concluded that abnormal and emergency operating instructions were performed consistent with expected standards and that operations personnel exhibited the fundamental operator competencies in response to the Unit 3 steam generator tube leak event.~~

~~Specifically, the resident inspectors determined that the operating crew displayed a questioning attitude of changing plant parameters and took conservative actions. The operating crew identified important preliminary increasing trends of Unit 3 air ejectors radiation monitors and subsequent alarms in a timely manner for a tube leak in steam generator 3E0-88. Additionally, the resident inspectors determined that crew supervision exercised effective oversight of plant status, crew performance, and control room command and control.~~

(1) Introduction: The team identified an unresolved item associated with Operations Procedure SO123-0-A8, "Trip/Transient and Event Review," that required a formal review of operator actions and safety systems to determine if important systems responded as design. The formal review was not completed.

Description: On March 19, 2012, the team requested to review the results of operations post trip/transient evaluation of the January 31, Unit 3 tube leak event. Operations Procedure SO123-0-A8, "Trip/Transient and Event Review," Revision 8, required a detailed post trip review following unplanned reactor trips. However, a formal trip/transient and event review was not available because operations personnel determined the Unit 3 event was planned and therefore a formal review was not required.

On March 27, 2012, Team met with operations personnel to discuss items on a draft Unit 3 trip/transient evaluation provided to the team. The team also discussed with operations personnel the requirements in Operations Procedure SO123-0-A8, and concluded a basis for what was "planned" and "unplanned" was not defined. Operations personnel determined the Unit 3 reactor trip was a planned reactor trip because Abnormal Operating Instruction SO23-13-14, "Reactor Coolant Leak," Revision 16, Section 4, had described actions for primary-to-secondary leakage. Specifically, this section stated, in part, under plant conditions of increasing steam generator tube leakage, operations personnel were required to perform a rapid power reduction to less than 35 percent power, then trip the reactor.

The team discussed with operations personnel that definitions for unplanned events have been established through industry standards to report on plant performance. These standards include NEI 99-02, "Regulatory Assessment Performance Indicator Guideline," Revision 6. Industry Guidance NEI 99-02 indicated that Unit 3 reactor trip should be considered unplanned since the reactor trip was required by an abnormal operating instruction and would count against the performance indicator for unplanned reactor trips. NRC Regulatory Issue Summary (RIS) 2000-08, "Voluntary Submission of Performance Indicator Data," Revision 1, allows industry to use NEI 99-02 to report performance indicator data.

Additional review and follow up will be required to review the corrective actions associated with the procedural guidance for an event review and then determine whether this issue represents a performance deficiency or constitutes a violation of NRC requirements. This issue is identified as URI 05000362/2012007-01, "Adequacy of the Trip/Transient and Event Review Procedure."

c. Conclusions

The resident inspectors concluded that abnormal and emergency operating instructions were performed consistent with expected standard and that operations personnel exhibited the fundamental operator competencies in response to the Unit 3 steam generator tube leak.

Specifically, the resident inspectors determined that the operating crew displayed a questioning attitude of changing plant parameters and took conservative actions. The operating crew identified important preliminary increasing trends of Unit 3 air ejectors radiation monitors and subsequent alarms in a timely manner for a tube leak in steam generator 3E0-88. Additionally, the resident inspectors determined that crew supervision exercised effective oversight of plant status, crew performance, and control room command and control.

The team identified one unresolved item associated with the adequacy of the trip/transient procedure.

1.4 Description of Steam Generator Inspections at SONGS Unit 2

On January 10, 2012, SONGS Unit 2 was shutdown for a refueling outage. Southern California Edison personnel conducted a scheduled steam generator inspection in accordance with Technical Specification ~~6.6.9~~5.5.2.11, "Steam Generator (SG) Program~~:~~." This was the first inspection of the Unit 2 steam generators since their replacement in January 2010. The accumulated operating time on the replacement Unit 2 steam generators was 1.7 effective full power years. There was no reported primary-to-secondary leakage at the time of shutdown.

The scope of the inspection included a 100 percent tube sample with an eddy current test bobbin probe over the full tube length, followup rotating coil inspections at special interest locations, and a secondary side foreign object search and retrieval. Three types of flaw indications were found in the tubes:

- Wear at the tube support plate and anti-vibration bar supports
- Wear caused by a loose part
- Wear at retainer bars

With the exception of the wear indications found at tube retainer bar locations, the wear indications found are similar to those found at other replacement steam generators after one cycle of operation. A total of 2411 tubes were found with indications at the tube support plates and anti-vibration bar supports, the vast majority of which had a measured depth of less than 20 percent of the tube wall thickness. Only two of these indications, located at the anti-vibration bar supports, exceeded the Technical Specification ~~6.6.9~~5.5.2.11.c repair limit of 35 percent of the tube wall thickness. The two affected tubes plus two additional tubes with 31 percent deep indications were stabilized and plugged.

Southern California Edison performed a reanalysis of the bobbin probe eddy current data collected during the Unit 2 inspection program. This reanalysis was performed after the finding of the long free-span indications in Unit 3, allowing insights gained during the Unit 3 inspections to be applied to the Unit 2 data. The scope of this reanalysis was a "box" of 1000 tubes in each Unit 2 steam generator which bounded the region of tubing affected by the instability damage in Unit 3. This reanalysis, using the bobbin probe, confirmed the results of the original analysis and did not identify any tube-to-tube wear.

Two tubes were found with indications (less than 35 percent through wall) caused by a small loose part on the secondary side. This loose part was removed from the steam generator. Metallurgical analysis indicated the loose part was a piece of weld metal, most likely introduced during steam generator manufacturing operations. The two affected tubes were left in service.

Six tubes were found with indications at retainer bar intersections. The retainer bars are part of the support structure for the anti-vibration bars and are a unique feature of steam generators manufactured by Mitsubishi. The measured indication depths ranged from 28 to 90 percent of the tube wall thickness. Because of the short measured lengths of these flaws, only the 90 percent indication was in-situ pressure tested as part of condition monitoring. The affected tube was successfully pressurized to 5300 psi with no leakage, confirming that the Technical Specification ~~6.6.9~~5.5.2.11.~~b tube~~.1 structural integrity performance criteria were met.~~-~~ Mitsubishi attributed the cause of these indications to retainer bar vibration, the potential for which had not been evaluated during design~~. Fort Calhoun is the only other domestic plant with Mitsubishi steam generators. The retainer bars at Fort Calhoun are significantly stiffer than at SONGS.~~ (see Section 4 of this report for additional details).

The six tubes with retainer bar indications have been plugged and stabilized. In addition, the remaining 182 tubes (total for both Unit 2 steam generators) that intersect the retainer bars were plugged as a preventive measure. Twenty four of these tubes were stabilized prior to plugging to ensure that all 188 plugged tubes will not sever due to continued vibration of the retainer bar. The tubes that were stabilized are strategically located at each end and center of the retainer bars.

Detailed plans for returning Unit 2 to service ~~were~~are still under development. Short-term plans relating to Unit 2 included conducting a full u-bend examination of 1375 tubes in both steam generators using a rotating coil. The tube sample was intended to ~~totally box in~~bound the region affected by free-span wear seen in Unit 3 by significant margin. The rotating coil provides a slightly more sensitive inspection for long free-span wear scars than the bobbin probe. These inspections were performed subsequent to the team's site visit and identified two tubes in Unit 2 steam generator 2E0-89 with shallow free-span wear in the u-bend region. These indications both measured approximately 14 percent deep, and were located in the same region of the bundle affected by free-span indications in the Unit 3 steam generators.

The tube wear data for Unit 2 is shown below.

**SONGS Unit 2 Steam Generators**
**Wear Depths Summary**

| Steam Generator SG2E88 (Through-Wall Wear) | Anti-Vibration Bar | Tube Support Plate | U-Bend Freespan | Retainer Bar | Foreign Object | Total Indications | Tubes with Indications |
|---|---|---|---|---|---|---|---|
| ~~TW~~ ≥ 50% | 0 | 0 | 0 | 1 | 0 | 1 | 1 |
| 35 - 49% | 2 | 0 | 0 | 1 | 0 | 3 | 3 |
| 20 - 34% | 86 | 0 | 0 | 0 | 2 | ~~88~~86 | 74 |
| 10 - 19% | 705 | 108 | 0 | 0 | 0 | 813 | 406 |
| TW < 10% | 964 | 117 | 0 | 0 | 0 | 1081 | 600 |
| TOTAL | 1757 | 225 | 0 | 2 | 2 | ~~1986~~**1984** | **734*** |

| Steam Generator SG2E89 (Through-Wall Wear) | Anti-Vibration Bar | Tube Support Plate | U-Bend Freespan | Retainer Bar | Foreign Object | Total Indications | Tubes with Indications |
|---|---|---|---|---|---|---|---|
| ~~TW~~ ≥ 50% | 0 | 0 | 0 | 1 | 0 | 1 | 1 |
| 35 - 49% | 0 | 0 | 0 | 1 | 0 | 1 | 1 |
| 20 - 34% | 78 | 1 | 0 | 3 | 0 | 82 | 67 |
| 10 - 19% | 1014 | 85 | 2 | 0 | 0 | 1101 | 496 |
| TW < 10% | 1499 | 53 | 0 | 0 | 0 | 1552 | 768 |
| TOTAL | 2591 | 139 | 2 | 5 | 0 | **2737** | **861*** |

*This value is the number of tubes with wear indications of any depth and at any location. Since many tubes have indications in more than one depth and location, the total number of tubes is less than the total number of indications.

1.5 Description of Steam Generator Inspections at SONGS Unit 3

After shutdown, the licensee started preparations for performing inspections of Unit 3 steam generators 3E0-89 and 3E0-88. The steam generator tube inspections commenced on February 12, 2012, and confirmed the location of the leak in steam generator 3E0-88 as coming from the tube in Row 106 Column 78. The leak was located 2 inches beyond anti-vibration support number 4 on the hot leg side. It was found to be associated with a long (approximately 30 inches) free-span flaw indication. No other tubes were found to be leaking.

The licensee then performed eddy current inspections of 100 percent of the tubes, full length, in both Unit 3 steam generators with a bobbin probe. The bobbin probe

examinations were supplemented by rotating coil examinations to confirm, characterize, and size the indications found by the bobbin probe. These examinations identified over 160 tubes in each steam generator with long free-span indications similar to that found on the leaking tube. In each steam generator, the tubes containing the free-span indications were grouped together in a tightly packed zone near the center of the tube bundle. The free-span indications were located on the upper and/or lower sides (i.e., the extrados and intrados) of the u-bend. Thus, a given free-span indication on the extrados of one tube tended to be matched by a similar indication on the intrados of the adjacent higher row tube located in the same tube column. This pattern provided early evidence to SCE personnel that the free-span indications were wear flaws due to tube-to-tube contact from motion of the u-bends within the plane of the u-bends. More than half of the free-span indications in each steam generator had maximum measured depths exceeding the 35 percent plugging limit in the technical specifications, and ranged to as much as 99 percent (for the non-leaking tubes).

Over 460 tubes in each steam generator were found with wear indications at the tube support plates. In general, tubes exhibiting the free-span wear indications tended to exhibit tube support plate indications with the highest depth measurements, typically with the deepest values at the seventh tube support plate and trending down at successively lower support levels. Approximately 170 tubes in each ~~SG~~steam generator exhibited indications at the tube support plates that exceeded the 35 percent plugging limit, with maximum depths ranging to 70 percent.

Approximately 800 tubes in steam generator 3E0-88 and 900 tubes in steam generator 3E0-89 exhibited wear indications at the anti-vibration bar supports. Most of these measured less than 20 percent deep, and only 2 indications exceeded the 35 percent plugging limit. For tube indications at anti-vibration bars in tubes not exhibiting free-span u-bend indications, the length of the wear indications was confined to within the width of the anti-vibration bars. ~~This was also true in SONGS Unit 2.~~ For tubes that exhibited free-span indications, many of these tubes had wear indications at the anti-vibration bars that extended outside the width of the anti-vibration bars which indicated in-plane movement of these tubes in the u-bend area.

Four tubes were found with indications at retainer bar intersections, with measured depths ranging from 28 to 46 percent. At the time of the team's presence at the site, planned corrective actions with respect to tubes adjacent to the retainer bar were similar to those completed for Unit 2. The four tubes with retainer bar indications were plugged and stabilized. In addition, the remaining 184 tubes (total for both Unit 3 steam generators) that intersect the retainer bars were plugged as a preventive measure. Twenty four of these tubes were stabilized prior. The tubes that were stabilized are strategically located at each end and center of the retainer bars.

Tube wear data for Unit 3 is shown below.

~~Wear Depths Summary~~SONGS Unit 3 Steam Generat

**Wear Depths Summary**

| Steam Generator SG3E88 (Through- Wall Wear) | Anti-Vibration Bar | Tub Supp Plat |
|---|---|---|
| ~~TW~~ ≥ 50% | 0 | |
| 35 - 49% | 3 | |
| 20 - 34% | 156 | |
| 10 - 19% | 1380 | |
| TW < 10% | 1818 | |
| TOTAL | 3357 | |

| Steam Generator SG3E89 (Through-Wall Wear) | Anti-Vibration Bar | Tube Support Plate | Tube-to-Tube Wear | Retainer Bar | Foreign Object | Total Indications | Tubes with Indications |
|---|---|---|---|---|---|---|---|
| ~~TW~~ ≥ 50% | 0 | 91 | 26 | 0 | 0 | 117 | 60 |
| 35 - 49% | 0 | 252 | 102 | 1 | 0 | 355 | 128 |
| 20 - 34% | 45 | 487 | 215 | 0 | 0 | 747 | 175 |
| 10 - 19% | 940 | 590 | 72 | 0 | 0 | 1602 | 450 |
| TW < 10% | 2164 | 94 | 1 | 0 | 0 | 2259 | 838 |
| TOTAL | 3149 | 1514 | 416 | 1 | 0 | **5080** | **887*** |

~~Detailed plans for satisfying the provisions of the NRC March 27, 2012, Confirmatory Action Letter for SONGS Unit 3 were not available and were still being developed.~~

*This value is the number of tubes with wear indications of any depth and at any location. Since many tubes have indications in more than one depth and location, the total number of tubes is less than the total number of indications.

1.6 In-Situ Pressure Testing

Technical Specification 5.5.~~8~~2.11.a for SONGS Units 2 and 3 requires that a condition monitoring assessment be performed during each outage that the steam generator tubes are inspected or plugged to confirm that the tube integrity performance criteria are being met. These performance criteria include ~~criteria~~specific requirements for tube structural integrity and accident induced leakage ~~integrity~~. The limiting structural criterion applicable to the SONGS Units 2 and 3 is the normal steady state pressure differential

across the tubes times a safety factor of three. The limiting accident induced leakage criterion is 0.5 ~~gallons~~gpm per ~~minute under main~~ steam ~~line break conditions~~generator.

Typically, the requirement for performing condition monitoring is satisfied by analyzing eddy current flaw indications relative to screening criteria that are functions of measured flaw depth, length, and/or eddy current voltage response. These screening criteria are conservative relative to the performance criteria since they make allowance for eddy current measurement error, uncertainties with respect to voltage correlations with flaw depth and burst strength, and material property variability. When these screening criteria are exceeded, in-situ pressure tests may be performed for tubes not meeting the screening criteria to confirm that the performance criteria are met for these tubes. In-situ pressure test procedures at SONGS and the screening criteria for selecting tubes to be tested were in accordance with Electrical Power Research Institute Report 1014983, "Steam Generator In-Situ Pressure Test Guidelines," Revision 3.

At Unit 2, one tube with a measured 90 percent deep indication at a retainer bar location was determined to be outside the screening criteria and was in-situ pressure tested. For Unit 3, an optional strategy to the screening criteria approach was taken in accordance with the Steam Generator In-Situ Pressure Test Guidelines, Appendix A. The Appendix A approach is a statistically based Monte Carlo approach that samples the uncertainty distributions associated with each of the input parameters for calculating tube burst pressure. This methodology selects all tubes determined to have a 0.95 probability or less of meeting the limiting structural integrity performance criterion. Application of this methodology led to selection of 129 tubes on Unit 3 for in-situ pressure testing, 73 tubes in steam generator 3E0-88 and 56 tubes in steam generator 3E0-89.

The in-situ pressure tests were performed under ambient conditions. Therefore the test pressures were adjusted upward from actual values under hot conditions to account for the increased yield and ultimate strength of the tube material under ambient conditions. The test pressures (with correction factors added) corresponding to normal operating conditions, main steam line break, and three times normal operating pressure differential were 1850 psi, 3200 psi, and 5300 psi, respectively.

The test procedure involved pressurizing the subject tube at a rate not to exceed 200 psi/sec to each test point. At each test point, pressure was held constant for two minutes if the tube was not leaking. If the tube was leaking, pressure was held constant for five minutes before ramping to the next test pressure.

The tube with a 90 percent deep retainer bar indication in Unit 2 was successfully tested to 5300 psi with no leakage. This demonstrated that all performance criteria were met for this tube. For Unit 3, 136 of the 144 tubes were successfully tested to 5300 psi with no leakage, demonstrating that these tubes met the performance criteria. The remaining eight tubes "failed" prior to reaching 5300 psi. Failure in this context means that leakage occurred in excess of the 4.5 gallons per minute pump capacity during the test, and test pressure could not be maintained. All eight tubes that failed were in steam generator 3E0-88. All tubes tested in steam generator 3E0-89 passed with no leakage.

Table 1 summarizes the in-situ pressure test results for the eight tubes that failed the test. Three of the eight tubes failed at or below the test pressure corresponding to main

steam line break differential pressure. The tube that leaked causing shutdown of SONGS Unit 3 (row 106, column 78) exhibited the lowest failure pressure, 2874 psi. The three tubes that failed at or below main steam line break pressure failed to meet the accident leakage performance criteria as well as the structural integrity performance criteria. The other five tubes met the accident leakage criteria, but failed to meet the structural criteria.

Prior to being tested to failure, the tube that leaked during operation (row 106, column 78) exhibited a measured leak rate of 0.072 gallons per minute at a test pressure corresponding to normal operating conditions. This compares with a leak rate of 0.06 gallons per minute measured by SCE operating staff for SONGS Unit 3 when they made the decision to shut the plant down. The reported operational leakage was evaluated based on ambient conditions. Both the operational and test measurements are less than the applicable technical specification limit of 0.1 gallons per minute.

Table 1 – SONGS 3 In-Situ Pressure Test Results

| SG | Row | Column | Leak Rate at Normal Operating Conditions (gpm) | Leak Rate at Main Steam Line Break (gpm) | Failure Pressure (psi) |
|---|---|---|---|---|---|
| 88 | 106 | 78 | 0.072 | >0.5 | 2874 |
| 88 | 102 | 78 | 0 | >0.5 | 3268 |
| 88 | 104 | 78 | 0 | >0.5 | 3180 |
| 88 | 100 | 80 | 0 | >0.5 | 4732 |
| 88 | 107 | ~~87~~77 | 0 | >0.5 | 5160 |
| 88 | 101 | 81 | 0 | >0.5 | 4889 |
| 88 | 98 | 80 | 0 | >0.5 | 4886 |
| 88 | 99 | 81 | 0 | >0.5 | 5026 |

2.0 Probable Cause Evaluation (Charter Item 2)

While the team was on-site, both SCE and Mitsubishi were in the process of conducting cause evaluations for the tube ~~failure~~failures and unexpected wear of steam generator tubes in Unit 3. As part of both evaluations, actions were being taken to understand the differences between Unit 2 and 3 steam generators. The cause evaluations were not complete and were undergoing changes while the Augmented Inspection Team was

onsite; however, SCE did subsequently complete their cause evaluation prior to the team's exit meeting. The team did a detailed review of the completed cause evaluation.

2.1 ~~SONGS~~SCE Cause Evaluation

a. Inspection Scope

The team conducted an overall and independent review of SCE's actions taken to understand the probable cause for the steam generator tube degradation. The team reviewed the updated final safety analysis report ~~updated final safety analysis report~~, technical specifications, design basis documents, original steam generator design, replacement steam generator design, purchase order specifications, design changes, manufacturing changes, nonconformance reports, supplier deviation reports, and interviewed personnel. The review included understanding the licensee's criteria for determining the cause, or if one could not be determined, the most probable cause.

b. Observations and Findings

No findings were identified.

The team participated in discussions with the licensee's cause analysis team and noted that the licensee employed various root cause evaluation techniques. These included a change analysis technique that compared design differences and a problem analysis technique relying on a systematic process that looked at the causal effects and risk assessments of possible causes. The team reviewed the licensee causal analysis summary that assigned a ranking of highly probable to unlikely.

In the area of thermal hydraulic analysis the licensee contracted AREVA to verify the accuracy of Mitsubishi's thermal-hydraulic code (FIT III) used during the design of the replacement steam generators, by comparing it to ATHOS, a thermal-hydraulic code developed by the Electric Power Research Institute (EPRI). In addition, SCE contracted Westinghouse to perform a completely independent analysis using a Westinghouse modified ATHOS thermal-hydraulic code. AREVA also performed independent flow induced vibration analyses. The licensee brought on board MPR associates and numerous other technical experts, including a world renowned expert in flow induced vibration, to assist in the cause assessment. The team observed that SCE preliminary causal analysis was generally consistent with that of Mitsubishi. Initially, the licensee reviewed the following cause contributors:

- Departure from original steam generator u-bend/anti-vibration bar configuration - highly probable
- Departure from original steam generator stay cylinder configuration - possible
- Departure from original steam generator tube support plate configuration - possible
- Replacement steam generator anti-vibration bar structure too flexible - possible
- Additional 300 rotations of Unit 3 replacement steam generator due to divider plate repair work - possible
- Thermal-hydraulic and flow induced vibration models used in replacement steam generator design incorrectly predicted replacement steam generator tube bundle

behavior – possible

The team observed that the licensee performed a detailed analysis and attempted to address all probable causes. The team observed that some of the conditions which were eliminated as potential contributors may need further evaluation. In particular, the team ~~believed~~determined that the only major difference between Units 2 and 3 was the divider plate repair to both Unit 3 steam generators. This difference had been discounted by both SCE and Mitsubishi. The divider plate is further discussed in Section 12.0 of this report.

c. Conclusions

The completed SCE cause evaluation identified the mechanistic cause of the tube-to-tube wear as fluid-elastic instability caused by a combination of localized high steam/water velocity, high steam void fraction, and insufficient contact forces between the anti-vibration bars and the tubes. ~~The Mitsubishi thermal/hydraulic model under-predicted the actual thermal/hydraulic conditions in the steam generator and improvements in fabrication between Unit 2 and Unit 3 steam generators led to the reduced contact forces.~~

2.2 Mitsubishi Cause Evaluation

a. Inspection Scope

The team conducted an overall and independent review of Mitsubishi's actions taken to understand the probable cause of the steam generator tube degradation. While onsite, the inspection team was informed that Mitsubishi was performing a failure analysis to characterize the mechanism causing the tube-to-tube wear condition in Unit 3. The team had periodic discussions with Mitsubishi personnel to gather information on the probable causes under consideration. The team reviewed information contained in the updated final safety analysis report, technical specifications, design basis documents, purchase order specifications, design changes, design drawings, manufacturing changes, nonconformance reports, and supplier deviation reports to understand the design and fabrication of the replacement steam generators and independently assess the information obtained from Mitsubishi's in-progress cause evaluation.

b. Observations and Findings

No findings were identified.

The team determined that Mitsubishi was performing a thorough evaluation of the failure mechanism leading to the tube-to-tube wear in Unit 3. The team noted that Mitsubishi gathered factual information about the design, fabrication, and operation of the replacement steam generators in Unit 2 and Unit 3 to understand the differences between these components and identify potential contributing causes. The team discussed the preliminary failure mechanism theory with Mitsubishi personnel, who attributed the tube-to-tube~~,~~ wear to a combination of design, fabrication, and operational factors.

Mitsubishi's preliminary explanation of the failure mechanism started with the combination of two factors: (1) a relatively small tube pitch to tube diameter ratio (P/D), and (2) high void fraction in the tube bundle area where the tube-to-tube wear was identified. The small pitch to diameter ratio was a fixed parameter in the replacement steam generators established by the nominal center-to-center distance between adjacent tubes (P) and the nominal outside diameter of the tubes (D). The high void fraction was identified from the results of Mitsubishi's thermal-hydraulic model for the secondary side of the replacement steam generators. Mitsubishi considered that the combination of these two factors may have resulted in favorable conditions for in-plane tube vibration based, in part, on the results of recent studies in fluid-elastic instability.

Additionally, Mitsubishi identified that the Unit 3 replacement steam generators had better dimensional controls during the fabrication process. This determination was based, in part, on the results of pre-service and in-service eddy current examinations, and fabrication data from Unit 2 and Unit 3 replacement steam generators. The correlation of dimensional controls with the failure mechanism was that improved dimensional controls for Unit 3 replacement steam generators resulted in less variability of as-built critical dimensions such as anti-vibration bar thickness, tube roundness, and gaps between tubes and anti-vibration bars. ~~Condition Report 201836127 Cause Evaluation, Revision 0, lists one of the mechanistic causes of the tube-to-tube wear to be associated with the reduction in dimensional variability that resulted in less contact force between the tubes and the anti-vibration bars.~~

The failure mechanism model also considered a fluid dynamic effect associated with the spreading of the tubes in the U-bend region during normal operating conditions. This effect was informally referred to as "flowering," due to the characteristic shape in which the tube bundle spreads transverse to the plane of the u-bends at normal operating conditions. "Flowering" was described as the elastic deformation of the anti-vibration bar structure and the tube bundle in the U-bend region, as a result of thermal expansion and fluid dynamic pressure acting on the secondary side of the tubes (see figure below). The deformation caused by the "flowering" effect was believed to result in multiple areas of no contact between the anti-vibration bars and the tubes, which minimized resistance to in-plane motion of the u-bend area of the tubes.

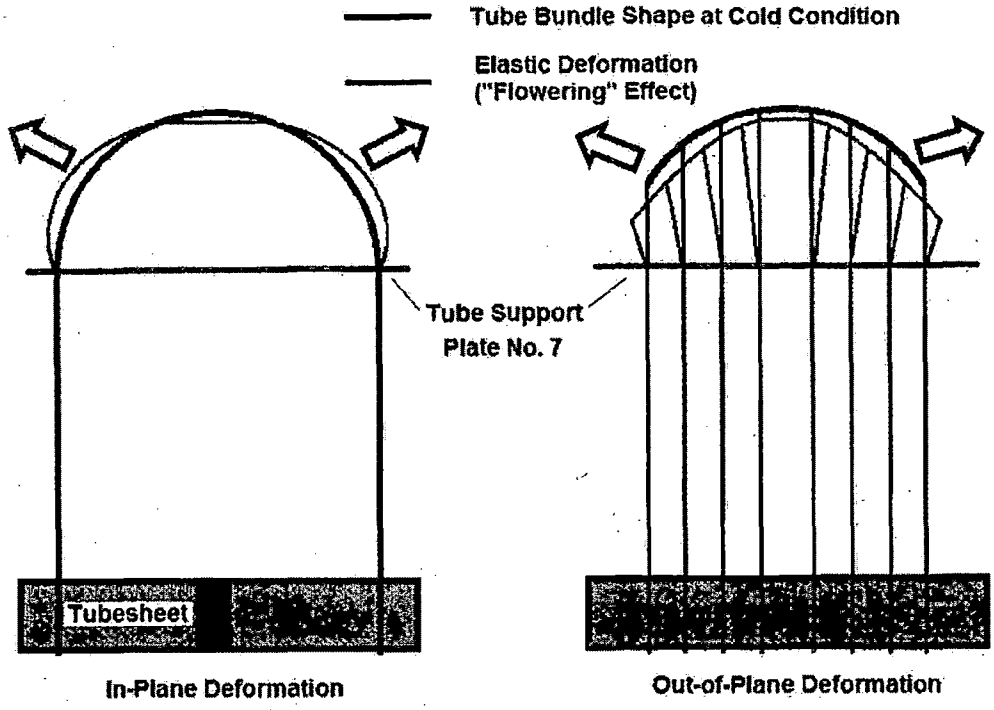


Description of "Flowering" Effect (Conceptual Drawing – For Illustration Purposes Only)

Mitsubishi considered that the collective contribution of the factors described above resulted in conditions in the U-bend that were highly susceptible to excessive tube vibration. The in-plane vibration of the tubes in the U-bend region allowed direct contact between free-span sections of the tubes, resulting in the unanticipated tube-to-tube wear.

At the conclusion of the onsite portion of this inspection, Mitsubishi was further evaluating the failure mechanism by conducting in-depth analyses of available data to validate their failure mechanism theory. One of the analyses included analytical studies of the impact of anti-vibration bar gap size, free-span length, fluid-elastic vibration, and contact forces on tube wear depth. An expected outcome of this analysis was that contact forces and the number of inactive supports should be the biggest contributors to wear under fluid-elastic instability conditions. Additionally, Mitsubishi was conducting further analytical studies of the "flowering" effect by modeling multiple cases of elastic displacement of the tube bundle structure, taking into consideration thermal expansion and dynamic pressures. Concurrent with these analyses, Mitsubishi was studying the effect of manufacturing dispersion on tube wear. Specifically, Mitsubishi was modeling multiple cases of manufacturing variability to study the influence of different dimensional controls on gap and contact forces. Mitsubishi was using as-built data as well as manufacturing tolerances to statistically assess the impact of dimensional controls on the resulting gaps and contact forces in different areas of the tube bundle. Based on the data reviewed by the team, the standard deviation of the tube ovality (G-value) decreased during each successive fabrication run of the steam generator tubes (order of

tube fabrication -> U2E0-89, U2E0-88, U3E0-89, and U3E0-88). One of the expected outcomes of this analysis was that manufacturing variability in Unit 3, in combination with the "flowering" effect, would result in a reduction of contact forces in Unit 3 relative to those in Unit 2. During the on-site portion of this inspection, the results of these studies were not finalized and additional failure analysis tasks were scheduled to accurately characterize the failure mechanism and support the cause determination.

c. Conclusions

At the time of the exit, Mitsubishi was still completing their independent cause analysis. ~~As part of the Confirmatory Action Letter inspection~~The team was unable to evaluate this aspect; however, the final Mitsubishi cause evaluation will be reviewed~~.~~ as part of the Confirmatory Action Letter inspection. No conclusions were reached with regard to the Mitsubishi cause evaluation at this time

3.0 Operational Differences in Configuration and Operation between Unit 2 and 3 (Charter item 3)

a. Inspection Scope

The team reviewed Unit 2 and 3 Cycle 16 operational data records found in operator logs and the plant computer system. The team focused on differences in configuration and operation between Units 2 and 3. The team evaluated full power operational data between Unit 2 and Unit 3 steam generators after each were replaced. From this data the team compared key plant parameters and other indications such as temperature, flow, power, pressure, and vibration and loose parts monitoring alarms. The team reviewed operational differences between Units 2 and 3 in order to gain information and to assess if these differences could have had an impact on the observed differences in the steam generator tube wear between the units.

b. Observations and Findings

~~No findings were~~ The team identified~~.~~

~~The team looked at~~ one unresolved item for which additional information is required to determine if a ~~number~~performance deficiency exists or if the issue constitutes a violation of NRC requirements. The team also modeled the impact of operational differences ~~from~~on the ~~perspective of the~~predicted thermal-hydraulic ~~disparities. The team also evaluated the significance of these differences insofar as potential impact to tube degradation.~~response~~. It was noted that Unit 3 ran with slightly higher primary temperatures, about 4°F higher than Unit 2. Other differences were noted in steam and feedwater flow but none~~ of the ~~differences were considered sufficient to significantly affect thermal hydraulic characteristics inside the~~ steam generators. ~~In addition, the team also identified that Unit 3 steam generators had numerous valid vibration and loose parts monitoring system alarms compared to Unit 2 steam generators.~~

(1) Introduction: The team identified an unresolved item associated with the number of valid vibration and loose parts alarms observed in Unit 3 steam generators compared to Unit 2 steam generators, during steady state conditions.

Description: During the review of operational differences between Unit 2 and 3 steam generators the team identified a significant difference in number of valid vibration and loose parts monitoring system alarms. The vibration and loose parts monitoring system was designed to provide continuous monitoring and conditioning of loose parts accelerometer signals. Two separate accelerometers were installed on each of the steam generators. The location of these instruments are on the steam generators' lower supporting structures and provide acoustic information about loose parts impacts specifically on the reactor coolant or primary side of the steam generators. The vibration and loose parts monitoring system real time functions consist mainly of impact alarm validation of suspected loose part events and recording acoustic data. Long term vibration monitoring and loose part event trending were done by engineering personnel using recorded data.

Unit 3 returned to service in February 2011, and the resident inspectors noted a number of nuclear notifications associated with Unit 3 steam generators vibration and loose parts monitoring alarms. On January 20, 2012, prior to the Unit 3 tube leak, engineering personnel also identified this trend and documented in Nuclear Notification NN 201818719 this problem and assigned an action to do further evaluation. On February 3, 2012, engineering personnel sent two sets of alarm signatures to Westinghouse, which contained impact data on alarms for time periods of steady state operation (i.e., no major temperature changes). Westinghouse engineering personnel concluded that the acoustic signals picked up by the accelerometers were valid and similar in nature to acoustic signatures caused by thermal movement of a steam generator expected during changes in thermal conditions, such as plant startup or shutdown. However the data obtained and analyzed had been taken during steady state operations. The team noted that Unit 2 steam generators did not receive the same number and type of alarms during a similar period of steady state operations. Engineering personnel also compared hot leg temperature changes linked to Unit 3 operations from February 18, 2011, to January 31, 2012, and confirmed about 30 valid alarms during this period were not associated with thermal transients.

Additional review and follow up will be required of the vibration and loose parts monitoring system alarms, including evaluation and disposition of Unit 3 alarms and then determine whether this issue represents a performance deficiency or constitutes a violation of NRC requirements. This issue is identified as URI 05000362/2012007-02, "Evaluation of Unit 3 Vibration and Loose Parts Monitoring System Alarms."

(2) ~~Introduction~~Operational Differences: The team performed a number of different thermal-hydraulic analysis of Units 2 and 3 steam generators. The output of the various analyses runs where then compared and reviewed to determine if those differences could have contributed to the significant change in steam generator tube wear. It was noted that Unit 3 ran with slightly higher primary temperatures, about

4°F higher than Unit 2. Other differences were noted in steam and feedwater flow but none of the differences were considered sufficient to significantly affect thermal hydraulic characteristics inside the steam generators. The different analyses included:

~~Description: The NRC conducted a number of different thermal-hydraulic analyses, including:~~

- Lower bounding thermal hydraulic analysis using the steam generator base design condition, where primary inlet temperature was 598°F, and an upper bound case where primary inlet temperature was 611°F as identified in Mitsubishi Document -L5-04GA021, Revision 3
- Varying steam generator pressures from 833 to 942 psia
- Steam mass flow rates from 7.59 to 7.62 Mlbm/hr
- Primary loop volumetric flow rate from 102,000 to 104,000 gpm, and
- Recirculation ratio from 3.2 to 3.5.

c. Conclusions

The team identified one unresolved item associated with SCE's evaluation of the Unit 3 loose parts monitoring alarms.

The result of the independent NRC thermal-hydraulic analysis ~~concluded~~indicated that differences in the actual operation between units and/or individual steam generators had an insignificant impact on the results and in fact, the team did not identify any changes in steam velocities or void fractions that could attribute to the differences in tube wear between the units or steam generators. It should be noted that increases in primary temperature and steam generator pressures has the effect of reducing void fractions and peak steam velocities, which slightly decreases the conditions necessary for fluid elastic instability and fluid-induced vibration.

4.0 Design and Manufacturing Differences (Charter Item #4) (Mitsubishi Charter Item 1)

During the development of the charter, it was not known how SCE and Mitsubishi reviewed and approved design and manufacturing changes. During the inspection, it was identified that all design and manufacturing changes proposed by Mitsubishi required review and approval from a SCE representative. Based on this, it was determined that this area could be covered as one item.

a. Inspection Scope

The team interviewed licensee and Mitsubishi personnel involved in the design and fabrication of the replacement steam generators and reviewed information including nonconformance reports, design drawings, fabrication procedures, design changes, engineering evaluations, supplier deviation requests, and design specifications to identify conditions affecting quality that resulted in relevant design differences between the replacement steam generators. The team assessed whether these differences could be considered as contributing factors for the cause of the tube-to-tube wear issue in Unit 3. The team also reviewed Engineering Change Packages 800071702 and 800071703

for the Unit 2 and Unit 3 replacement steam generators, respectively, with emphasis on changes made to the design methodology described in the updated final safety analysis report for the original steam generators to verify that the evaluation was performed in accordance with licensee procedures and the provisions of 10CFR 50.59, "Changes, Tests, and Experiments."

b. Observations and Findings

~~No findings were identified.~~

The team identified two unresolved items for which additional information is required to determine if performance deficiencies exist or if the issues constitute violations of NRC requirements. The team also identified several observations related to the design, fabrication, and the engineering change package for the Unit 2 and Unit 3 replacement steam generators.

~~1~~(1) Introduction: The team identified an unresolved item associated with the design of the retainer bars in Unit 2 and Unit 3 replacement steam generators.

Description: In February 2012, the licensee identified wear indications in Unit 2 replacement steam generators at the tube locations in contact with the retainer bars (see figure below). Some of the indications showed excessive wear with a maximum degradation of 90 percent through wall.

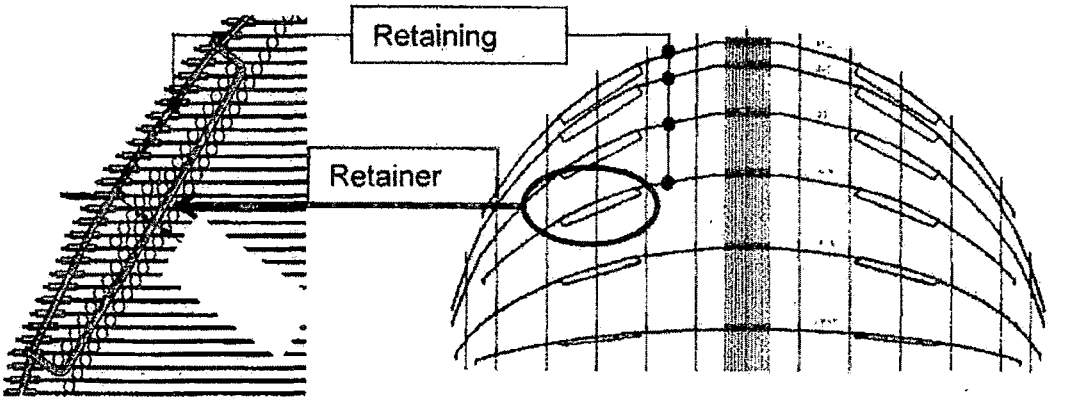


**Retainer Bar Design and Location of Affected Tubes (For Illustration Purposes Only)**

The team identified that the design of the replacement steam generators did not expect any potential vibration concerns in the area of the tube bundle where the retainer bars were located. The basis for Mitsubishi's design philosophy relied on the following factors:

- Based on the calculated natural frequency of the retainer bar, Mitsubishi considered that there would not be a resonant vibration condition relative to the flow conditions in the location of retainer bars.
- The vibration analysis of the tube bundle only considered out-of-plane vibration because in-plane vibration was not expected to be an operational concern for the retainer bars.
- The outermost tubes were considered the least susceptible to flow-elastic instability; therefore retainer bar locations were not included in the vibration analysis.
- Fluid-elastic instability was found not applicable to the retainer bar because this mechanism did not apply to a single tube in cross flow.
- Vortex-induced vibration was found not applicable to the retainer bar because it was considered a vibration mode applicable to a single cylinder in uniform cross flow in a large area and the flow condition around the retainer bars was considered slug-froth two phase flow.

However, upon identification of retainer bar-to-tube wear in Unit 2 replacement steam generators, Mitsubishi performed an evaluation to identify the cause of excessive wear. The analysis considered three vibration mechanisms: fluid-elastic instability, vortex-induced vibration, and turbulence-induced vibration (random vibration). The analysis for turbulence-induced vibration determined that random vibration was the possible cause of the retainer vibration, based on the peculiar flow around the retainer bar, combined with the rather low natural frequency of the retainer bar. The analysis used the two phase flow conditions around the retainer bars and identified various modes of vibration at those flow conditions that could lead to retainer bar vibration and consequently to tube wear.

Additional review by the NRC is required following completion of the ~~licensee's~~Mitsubishi's cause evaluation to determine whether this issue represents a performance deficiency or constitutes a violation of NRC requirements. This issue is identified as URI 05000362/2012007-03, "Evaluation of Retainer Bars Vibration during the Original Design of the Replacement Steam Generators."

~~2~~(2) Introduction: The team identified an unresolved item associated with the dimensional controls of critical dimensions throughout the fabrication of Unit 2 and Unit 3 replacement steam generators.

Description: Based on the information gathered by the team on the differences in dimensional controls of critical parameters in Unit 2 and Unit 3 replacement steam generators, the team determined that Mitsubishi did not consider the potential impact of improving dimensional controls for tube roundness and anti-vibration bars on the final tube bundle clearances at normal operating conditions.

Additional review by the NRC is required following completion of ~~the~~ ~~licensee's~~Mitsubishi's cause evaluation to fully assess how the dimensional controls contributed to the tube-to-tube wear in Unit 3 and then determine whether this issue represents a performance deficiency or constitutes a violation of NRC requirements. This issue is identified as URI 05000362/2012007-04, "Evaluation of Changes in

Dimensional Controls during the Fabrication of Unit 2 and Unit 3 Replacement Steam Generators."

~~3)~~(3) Design Differences: The team did not identify any significant differences in the design requirements of Unit 2 and Unit 3 replacement steam generators. The "Conformed Specification for Design and Fabrication of the Replacement Steam Generators," also known as the design specification, contained identical technical requirements for Unit 2 and Unit 3 steam generators. All replacement steam generators were required to be designed, fabricated, and tested in accordance with the ~~2022~~1998 edition of the American Society of Mechanical Engineers (ASME) Boiler and Pressure Vessel Code, with the 2000 Addenda, industry standards, and NRC endorsed methods described in applicable regulatory guides. The licensee specified the same licensing requirements for all replacement steam generators.

The design specification also contained provisions to address technical or quality deviations from the requirements of the purchase order or the design specifications, including the disposition of "Repair" or "Accept as-is" conditions captured as non-conformance reports in Mitsubishi's quality assurance program and changes to documents previously approved by the licensee. This process was referred to as "Supplier Deviation Request" and allowed the licensee to review and approve deviations from the approved design specifications. The team noted that changes affecting the specified design were submitted to SCE personnel for review and approval.

The team noted that the design specification established identical provisions for the design of the replacement steam generator components including the vessel, upper/lower shell, transition cone, tubesheet, channel head, divider plate, tube supports, tubing, steam nozzle, feedwater nozzle, primary nozzles, steam flow limiting device, moisture separators/dryers, feedwater distribution system, blowdown and sludge management, access/inspection ports, instrument/sampling taps, and loose part monitoring.

The design specification also established identical requirements for the service life and service environmental conditions of the replacement steam generators. The licensee also specified identical design loading, structural, and seismic requirements for all replacement steam generators. The design specification contained identical requirements for design transients under normal, upset, emergency, faulted, and test conditions.

Additionally, the performance requirements in the design specification were identical for each replacement steam generator, which included:

- Water Level Stability
- Circulation Ratio
- Moisture Carryover
- Steam Carryunder in the Downcomer Annulus
- Reactor Coolant Flow Rate
- Primary-To-Secondary Leakage

- Blowdown Capacity
- Thermal Rating
- Heat Transfer Surface Area
- Tube Plugging Margin
- Fouling Factor
- Overall Heat Transfer Coefficient
- Primary Side Design and Operating Pressure/Temperatures
- Secondary Side Design and Operating Pressures/Temperatures
- Primary Side Design and Operating Flows
- Secondary Side Design and Operating Flows
- Tube Material and Dimensions

The replacement steam generator design developed by Mitsubishi for SONGS Unit 2 and Unit 3 in accordance with the licensee's design specification was translated into the same set of design and fabrication drawings. The team noted that some as-built dimensions varied between Unit 2 and Unit 3 steam generators as a result of the divider plate weld repairs in Unit 3 and other manufacturing processes. However, these dimensional changes did not represent significant deviations from the original design specifications. ~~Therefore, the team determined that no significant differences existed in the design requirements of Unit 2 and Unit 3 replacement steam generators.~~

~~4)~~(4) Fabrication Differences: The team noted that the design specification contained the same general fabrication requirements for the Unit 2 and Unit 3 replacement steam generators. The design specification contained the methods required for fabrication, assembly, inspection, and testing of the replacement steam generators. The specification covered, in part, fabrication requirements for the channel head cladding, tube dimensions, tube wall thickness, tube bend radius, tube "ovality," tubesheet, tube-to-tubesheet joints, tube supports, tube bundle, machined gasketed surfaces, non-ASME steam generator internals, welding methods, post-weld heat treatment, and allowable welding materials. The specification also contained detailed requirements for inspections, tests, and examinations, which included examination methods and personnel qualification requirements.

The design specification also required the use of "Supplier Deviation Requests" to address technical or quality deviations from the requirements of the Purchase Order or the design specifications, including the disposition of "Repair" or "Accept as-is" conditions identified during the fabrication process and changes to fabrication documents previously approved by the licensee. The team noted that fabrication issues affecting the specified design were submitted to SCE personnel for review and approval.

Based on discussions with SCE and Mitsubishi personnel and the review of documentation about the fabrication history of Unit 2 and Unit 3 replacement steam generators, the team identified the differences listed below. At the conclusion of the onsite portion of this inspection, the differences between Unit 2 and Unit 3 steam generators as a result of the fabrication process were under consideration for the cause evaluation.

- Steam Dryer Assembly – During the fabrication of Unit 2 steam generator 2E0-89, Mitsubishi identified a nonconforming condition of the steam dryer assembly that included damaged locking plates of vane jacking devices, displaced bolts, and damaged vanes. The cause of this issue was determined to be inadequate evaluation and control of the design ~~in~~with regard to the capacity of the vane jacking devices to sustain all fabrication conditions. Specifically, the vane jacking devices failed to stay in the design position during multiple rotations of the steam generator assembly during fabrication. Mitsubishi corrected the condition, in part, by replacing all vane jacking devices and damaged vanes with a new design, which was also used in the fabrication of the Unit 2 steam generator 2E0-88, and Unit 3 steam generators 3E0-89 and 3E0-88. Additionally, Mitsubishi modified the assembly sequence of the steam dryers. For Unit 2 steam generator 2E0-89, the steam dryer vanes were assembled in-situ while the steam dryers for Unit 2 steam generator 2E0-88 and Unit 3 steam generators 3E0-88 and 3E0-89 were preassembled before installation in their final position.

- Drilling of Tubesheet Holes – The tubesheet holes in Unit 2 and Unit 3 steam generators where the tubes are inserted for final assembly were made with different drill bits. The Unit 2 steam generator tubesheets were drilled with uncoated drill bits. The Unit 3 steam generator tubesheets were drilled with titanium-nitride coated drill bits, which improved the drill bit life and resolved tooling mark issues experienced in Unit 2.

- Transition Wrapper Welding – The welding of the transition wrapper was performed in different order for each unit. For Unit 2 steam generators, the transition wrapper was welded after the tubes and anti-vibration bars were installed. In Unit 3 steam generators, the transition wrapper was welded before the installation of tubes and anti-vibration bars.

- Cladding Removal Process for the Channel Head – The removal of the stainless steel clad weld from the interior surface of the channel head base metal in preparation for the divider plate weld (i.e. structural butter weld) was performed with different methods in Unit 2 and Unit 3 replacement steam generators. For Unit 2, Mitsubishi used a machining process to remove the cladding in both steam generators. In Unit 3, Mitsubishi used an air carbon-arc gouging process. This method resulted in separation of the butter weld during hydrostatic testing. The root cause evaluation concluded that the air carbon-arc gouging process left carbon deposits on the base metal. Gouging was followed by grinding which was designed to remove the heat affected zone and expected to completely remove the carbon deposits. However, the grinding process left carbon deposits behind, which resulted in the localized areas of high carbon and high base metal hardness due to carburization. The repair of the Unit 3 divider plate welds is addressed in further details in Section 12.0 of this report.

- Helium Leak Test – As part of the fabrication process, Mitsubishi performed a Helium-Nitrogen leak test on the secondary side of the replacement steam

generators to check for leaks on the tube-to-tubesheet welds. For all steam generators, this test was performed after completion of the tube-to-tubesheet weld, but prior to the penetrant examination of the tube-to-tubesheet welds and final tube expansion. The leak tests for Unit 2 steam generators were performed at a higher pressure than Unit 3 steam generators. Additionally, the Unit 2 tests were performed using a temporary welded cap on top of the steam generator shell to enclose the secondary side, while a temporary clamped cap was used in Unit 3 steam generators. All tests required the same holding time before starting the test and the same leak rate acceptance criteria.

- Preliminary and ASME Section III Hydrostatic Tests – The number of hydrostatic tests performed in accordance with ASME Section III on the primary and secondary sides of the replacement steam generators varied between Units due to the results of the initial test in each steam generator. For each replacement steam generator, the hydrostatic tests were performed first on the primary side and then on the secondary side. Both Unit 2 steam generators met the acceptance criteria in the first hydrostatic test. However, during the first hydrostatic test on the secondary side of Unit 3 steam generator 3E0-89, Mitsubishi identified leakage through a tube-to-tubesheet weld that exceeded the ASME Code acceptance criteria. After repairs were completed to address the leakage, the hydrostatic tests were re-performed. Following the second set of hydrostatic tests on Unit 3 steam generator 3E0-89, cracking indications were identified in the divider plate-to-channel head weld. After repairs were completed to address the divider plate weld cracks, a third set of hydrostatic tests were performed in Unit 3 steam generator 3E0-89. Since similar cracking indications of the divider plate weld were identified in Unit 3 steam generator 3E0-88, a second set of hydrostatic tests was performed in this steam generator after the divider plate weld was repaired.

  Additionally, prior to each ASME Section III hydrostatic test, Mitsubishi performed a preliminary hydrostatic test of the primary and secondary side of the steam generators at design pressure to check for leakage at the feed pump, pressure filling line, temporary gaskets, and temporary seals. Therefore, each replacement steam generator received an equal number of preliminary and ASME Section III Hydrostatic Tests. The total numbers of hydrostatic tests for each steam generator are summarized below.

**Number of Preliminary and ASME Section III Hydrostatic Tests**

| Steam Generator | Primary Side | Secondary Side | Results |
|---|---|---|---|
| 2E0-89 | 1 | 1 | Acceptance criteria met |
| 2E0-88 | 1 | 1 | Acceptance criteria met |
| 3E0-89 | 1 | 1 | Leakage detected in tube-to-tubesheet weld |
| | 1 | 1 | Divider plate weld separation weld identified |
| | 1 | 1 | Final – Acceptance criteria met |

| | | | |
|---|---|---|---|
| 3E0-88 | 1 | 1 | Divider plate weld separation weld identified |
| | 1 | 1 | Final – Acceptance criteria met |

- Pre-Service Inspection – The design specification established similar requirements for the pre-service eddy current examination of Unit 2 and Unit 3 replacement steam generators. The team noted that the eddy current examinations of Unit 2 and Unit 3 steam generators were performed with similar eddy current techniques, including essential variables. However, the circumstances in which the examinations were performed varied for each Unit. For Unit 2, the pre-service examination was performed after the steam generators were delivered at the SONGS jobsite. The steam generators were examined on the shipping saddles, where the position of the tube bundle was at 45 degrees from the gravity neutral position. This position was dictated by the location of the steam generator lifting trunnions which were installed on the upper shell at 45 degree orientation from the steam generator centerline. For Unit 3, the pre-service eddy current examination was performed at the Mitsubishi Kobe facility while the steam generators were still on the fabrication rollers and in the gravity neutral position (i.e. divider plate oriented horizontally). The decision to perform the Unit 3 pre-service examination at the Mitsubishi facility was dictated by delivery schedule considerations resulting from the divider plate weld repairs.

- Flow Limiter for Primary Inlet Nozzles – The replacement steam generators were designed with a flow limiter located in the primary inlet nozzle (see figure below) in order to make the reactor coolant system flow similar to the flow rate of the original steam generator and not exceed the maximum allowable reactor coolant system flow rate. The licensee's evaluation for the engineering design package determined that although the original steam generators had a number of plugged tubes, the reactor coolant system flow rate of the original steam generators was near the design requirement. Because the replacement steam generators has 377 more tubes than the original steam generators, and contained tubes with u-bends versus "square bends", the pressure drop of the replacement steam generators with no plugged tubes would be much less than the original steam generators resulting in a higher flowrate.

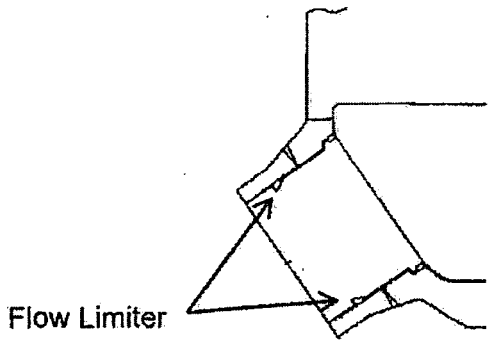


Replacement Steam Generator Primary Inlet Nozzle (For Illustration Purposes Only)

The flow limiter was designed to ensure the total "best estimate" reactor coolant flow rate with the replacement steam generators installed would not exceed 106.5 percent of the design volumetric flow rate of 396,000 gallons per minute at a reactor coolant system cold leg temperature of Tcold = 540.9°F. For Unit 2 replacement steam generators, the flow limiter diameter to nozzle inner diameter ratio was 0.94 while the ratio for Unit 3 steam generators was 0.915 due to Unit ~~2~~3 reactor coolant pump replacement. The flow limiter dimensions resulted from a scaled model test performed by Mitsubishi and it was designed to be machined as part of the nozzle base metal.

- Pitch Distance of Tube Support Plate Drilled Holes in Unit 2 Steam Generator 2E0-89 – During fabrication of the tube support plates for Unit 2 steam generator 2E0-89, quality control inspections identified unacceptable measurements of the pitch distance between drilled holes. Mitsubishi fabrication procedures required verification of the total center-to-center distance between ten inline drilled holes at certain sample points of the tube support plate. The dimensional verification checks identified a total of 200 measurements in tube support plate number 3 and 10 measurements in tube support plate number 6 that did not meet the dimensional acceptance criteria established in the fabrication procedures. Mitsubishi evaluated this non-conformance condition and accepted the condition "as-is" with the SCE's approval. The technical justification for accepting the condition addressed four elements: (a) the impact of the condition on the ability to insert the tubes through the affected areas of the tube support plates, (b) resulting stress on the tubes after insertion, (c) impact of the condition on the tube to anti-vibration gap size, and (d) possible occurrence of tube scratch during inspection. Similar unacceptable measurements were not identified in Unit 2 replacement steam generator 2E0-88 or Unit 3 replacement steam generators 3E0-89 and 3E0-88.

- Tube-to-Tube Clearance in Unit 2 steam generator 2E0-89 – During fabrication of Unit 2 replacement steam generator 2E0-89, interference checks identified that the clearance between the tubes in Rows No. 28 and 30 in Column No. 22 was less than the minimum clearance of 0.13-inch specified in Mitsubishi's inspection procedure. The condition was accepted "as-is" by Mitsubishi and SCE through the supplier deviation request process. The main considerations of the technical evaluation included: (a) thermal expansion difference, (b) tube expansion due to operating pressures, (c) tube displacement due to out-of-plane flow induced vibration, and (d) tube displacement due to seismic acceleration. The team noted that no tube-to-tube wear indications were identified in this area of the tube bundle.

- Anti-Vibration Bar Spacing Issues in Unit 2 Steam Generator 2E0-89 – During fabrication of Unit 2 replacement steam generator 2E0-89, quality control inspections identified unacceptable gaps between tubes and the anti-vibration bars in the outside tube columns. The affected area was identified as welding zone-4. The apparent cause for the anti-vibration bar spacing issue was due to performing the welding of zone-4 while the steam generator was oriented horizontally with this welding zone oriented to the bottom of the bundle. In this configuration, the tube bundle experienced sagging at the time of welding due to

gravity. After completion of welding zone 4, the steam generator assembly was rotated 180 degrees for additional assembly steps, but the sagging in the opposite direction caused enlargement of the gaps in welding zone 4 and this enlargement remained approximately the same for all subsequent rotations. When zone-4 was rotated 180-degrees after welding, deflection or sagging of the tube retaining bars due to gravity slightly pulled the anti-vibration bars, increasing the gap between the tube and the anti-vibration bars in this zone.

With the licensee's approval, Mitsubishi implemented various corrective actions to address the condition in the pending Unit 2 replacement steam generator 2E0-88 and subsequently in Unit 3 steam generators which included: (a) use of smaller spacer blocks between tubes for the installation of anti-vibration bars, (b) re-define the welding zones to limit welding in the horizontal position, and (c) reduce rotations during welding of the other bundle zones. Mitsubishi performed rework activities in Unit 2 steam generator 2E0-89 to restore anti-vibration bar spacing to design specifications. These activities resulted in better gap distribution. All the tube-to-anti-vibration bar gaps exceeding the initial dimensional criteria were further evaluated and accepted in accordance with Mitsubishi's gap size evaluation procedure.

- Rotations of Steam Generator Assembly for Anti-Vibration Bar Installation and Welding – The team noted that welding of anti-vibration bars structure required rotating the steam generators several times. As a result of the corrective actions generated to address the anti-vibration bar spacing issues in Unit 2 steam generator 2E0-89, the installation procedure was revised to reduce the number of rotations for anti-vibration bar installation to attain better gap control. This procedure revision resulted in different number of rotations in each replacement steam generator. Steam generators Unit 2 E0-89, Unit 2 E0-88, Unit 3 E0-89, and Unit 3 E0-88 received 11.25, 4, 3.5, and 3.5 rotations, respectively, during installation of the anti-vibration bars structure.

- Temporary Installation of Plastic Ties – In order to limit the displacement of anti-vibration bars during rotation of the steam generator assembly for welding of the anti-vibration bars structure, Mitsubishi revised the installation procedure to install temporary plastic ties between the retaining bars and the tubes. This step of the anti-vibration bar assembly process was performed in a different sequence for Unit 2 and Unit 3 steam generators. For Unit 2, the installation of plastic ties occurred after welding the transition wrapper, the Helium leak test, and tube hydraulic expansion, but before welding the channel head to the tubesheet, the hydrostatic tests, and the pre-service inspection. In Unit 3, the installation of plastic ties was performed between welding the transition wrapper and the Helium leak test.

- Dimensional Controls of Anti-Vibration Bar Structure – According to Mitsubishi's preliminary cause evaluation taking place at the time of this inspection, the controls of critical dimensions affecting the clearances between the tube and the anti-vibration bars were gradually improved throughout the fabrication of the Unit 2 and Unit 3 steam generators. This improvement on dimensional controls was a

consideration for the determination of the failure mechanism leading to tube-to-tube wear in Unit 3.

The first dimensional control under consideration was the improvement of tube roundness in the section of the tubes that was bent to form the U-bend shape. During fabrication of Unit 2 steam generator 2E0-89, the supplier of tubular product for Mitsubishi (i.e. Sumitomo), experienced quality issues to meet the G-values established in the design specifications, resulting in a high number of tube rejections. The G-value was a measure of departure from roundness, or "ovality," after the tubes were bent and it was controlled in order to control the gap between tubes and anti-vibration bars (see figure below). The G-values were measured at different locations along the U-bend section of the tubes for a selected number of tubes per row, as established in Mitsubishi's procedure. The acceptance criteria for G-value varied depending on the row where the tubes were installed. The acceptance criteria also remained the same throughout the fabrication of Unit 2 and Unit 3 replacement steam generators.

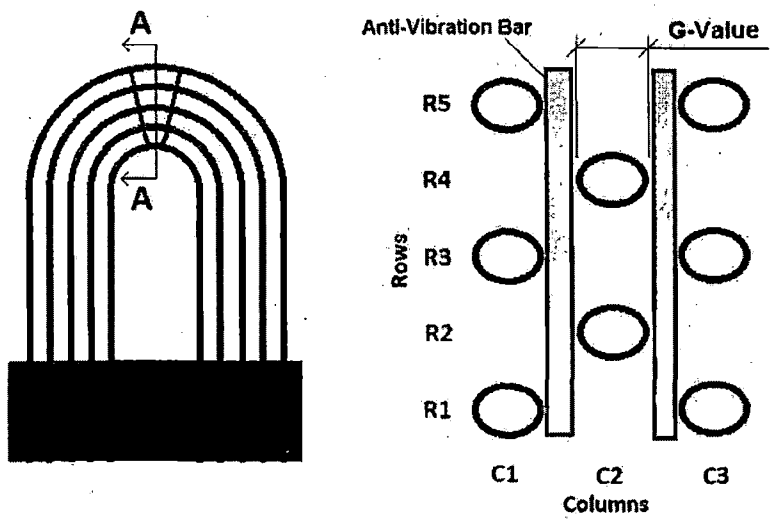


Section A-A

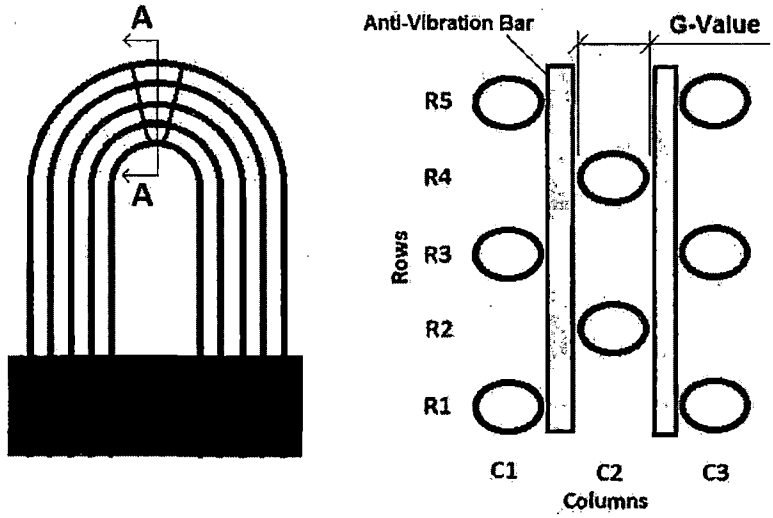


Section A-A

Description of G-Value Parameter (Conceptual Drawing – For Illustration Purposes Only)

Based on discussions with licensee personnel and documentation reviews, the team noted that Sumitomo implemented measures to improve the quality of the tube bending process which resulted in less deviation of G-values and a reduction in the amount and variability of tubing "ovality." Based on the statistical analysis of G-value data collected during fabrication of the Unit 2 and Unit 3 steam generators, Mitsubishi concluded that the G-values standard deviation gradually decreased since the fabrication of the first steam generator.

Another dimensional control under consideration was the variability of anti-vibration bar dimensions. Mitsubishi's fabrication procedures required inspection of various dimensions of the anti-vibration bars to control the gap between the anti-vibration bars and the tubes. These dimensions were: thickness in the straight sections, twisting and flatness of the straight sections after bending, and thickness of the anti-vibration bar tip (i.e. nose) after bending. Among these dimensions, the twisting and flatness of the straight sections after bending were verified using a "Go or No-Go" approach based on the acceptance criteria in Mitsubishi's procedures but no specific measurements were required to be maintained by procedure. Additionally, the acceptance criteria for anti-vibration bar dimensions remained the same throughout the fabrication of Unit 2 and Unit 3 replacement steam generators. Mitsubishi conducted a preliminary statistical analysis of the available dimensional data for anti-vibration bars and the team concurred that there were minor differences in the statistical distribution of these dimensions in Unit 2 and Unit 3 steam generators.

Comn
any de

[gew]I
inform

Engineering Change Package (10 CFR 50.59): The team determined that the licensee's evaluation for changes in the updated final safety analysis report's design methodologies for the replacement steam generators was consistent with SONGS procedures for the implementation of 10 CFR 50.59 requirements. The licensee's evaluation contained in Engineering Change Packages 800071702 and 800071703 for the Unit 2 and Unit 3 replacement steam generators, respectively, determined that the replacement of the original steam generators did not affect the current licensing basis to the extent of needing prior approval from the NRC as required by 10 CFR 50.59.

In the 50.59 screening evaluation associated with the engineering change package for the Unit 2 and Unit 3 replacement steam generators, the licensee determined that the proposed activity did not adversely affect a design function, or the method of performing or controlling a design function described in the updated final safety analysis report. The licensee also determined that the steam generator replacement activity did not change a procedure in a manner that adversely affected how an updated final safety analysis report design function is performed or controlled. Additionally, the licensee determined that the steam generator replacement activity did not involve a test or experiment not described in the updated final safety analysis report. The licensee evaluated the following updated final safety analysis report design functions in the 50.59 screening:

- Steam Generator Design Functions
- Reactor Coolant System Structural Integrity
- Emergency Core Cooling System Performance
- Non-Loss of Coolant Accident Transients
- Containment Pressure-Temperature Analysis
- Low Temperature Overpressure Protection
- Reactor Protection System, Engineered Safety Features Actuation System, Core Operating Limit Supervisory System, and Core Protection Calculations
- Nuclear Steam Supply System Performance
- Non-Safety Related Control Systems Performance

However, the 50.59 screening evaluation identified three methods of analysis described in the updated final safety analysis report that were affected by the proposed steam generator replacement and required further evaluation against the criteria in 10 CFR 50.59. The affected methodologies are described below:

- Seismic Analysis of Reactor Vessel Internals – The original analysis of SONGS Unit 2 and Unit 3 reactor vessel internals with the original steam generators was performed with the methodology described in Combustion Engineering Topical Report CENPD-178, "Structural Analysis of Fuel Assemblies for Combined Seismic and Loss of Coolant Accident." Subsequent to the submittal of this report, Combustion Engineering revised the methodology by modifying modeling techniques, computer codes, testing methods, and acceptance criteria in response to changes in licensing requirements. Consequently, the original report was resubmitted to the NRC as CENPD-178-P, Revision 1-P, August 1981. This revision was approved by the NRC in a Letter from H. Bernard to A. Scherer, "Acceptance for Referring of Licensing Topical Report CENPD-178," dated August 6, 1982. The licensee used this revised methodology for the replacement steam generators and considered it as a methodology approved by the NRC for the intended application.

- Reactor Coolant System Structural Integrity – The structural analysis of the original steam generators used ANSYS software for the thermal and stress analyses while the replacement steam generators were analyzed using ABAQUS software. ANSYS was described in the updated final safety analysis report as a large-scale, general-purpose, finite element program for linear and nonlinear structural and thermal analysis of the reactor coolant loop components. The licensee considered ABAQUS to be similar to ANSYS. The licensee compared both programs using thermal and stress sample problems. The comparison demonstrated that the results varied from theoretical solutions by no more than 1 percent, and ABAQUS and ANSYS results themselves were also within 1 percent of each other. The variability of results was determined to be within the margin of error for the subject type of analysis.

- Tube Wall Thinning Analysis – The original steam generator analysis used CEFLASH computer program for the main steam line break mass-energy blowdown analysis, whereas the replacement steam generator analysis used manual calculations to represent the main steam line break blowdown loads by applying the maximum possible tube differential pressure, which bounded the pressure calculated by CEFLASH.

  For loss of coolant accident analysis, the original steam generator used STRUDL computer program to calculate displacement histories and then ANSYS computer program to calculate tube stresses. The tube stresses for the replacement steam generators were determined using ANSYS computer program based on the blowdown forces. For the original steam generators the combination of loads analyzed was primary loop pipe break plus design basis earthquake and main steam line break plus design basis earthquake. For the replacement steam generators, the loss of coolant accident, design basis earthquake, and the main

steam line break events were combined as one limiting event, which SCE considered to be a more conservative method of evaluation relative to the original steam generators. The licensee determined that the results of the tube wall thinning analysis for the replacement steam generators were conservative or essentially the same and the methodology used did not represent a departure from a method of evaluation described in the updated final safety analysis report.

Further discussion is contained in Section 13.0 of this report on the methodology used by the licensee for the reactor coolant system structural integrity and tube wall thinning analysis.

The team noted that a key methodology for the design of the ~~original and~~ replacement steam generators was the thermal-hydraulic code used to model the flow conditions in the steam generators. ~~The original steam generators were designed using ATHOS thermal hydraulic code while the replacement steam generators were designed with a proprietary code from Mitsubishi (Need to verify this with Joel. Think the generators were designed before ATHOS was developed in 1985). Mitsubishi's~~ Mitsubishi's FIT-III thermal-hydraulic code was accepted by SCE for the design of the replacement steam generators. The team noted that the updated final safety analysis report did not ~~specifically~~ describe ~~ATHOS as~~ the thermal-hydraulic code used for the design of the original steam generators and therefore the ~~change in~~use of the FIT-III thermal-hydraulic code did not constitute a change in methodology or a change in an element of a methodology described in the updated final safety analysis report. The updated final safety analysis report did describe the computer code CRIB as the code used to analyze overall steam generator performance. As described in the updated final safety analysis report, CRIB was used to establish the recirculation ratio and fluid mass inventories as a function of power level in the original steam generators.

With regard to the major design changes between the original and replacement steam generators, the updated final safety analysis report did not specify how the original steam generators relied on special design features such as the stay cylinder, tubesheet, tube support plates, or the shape of the tubes to perform the intended safety functions. The description of the original steam generators was focused on the overall thermal performance characteristics and the applicable codes and standards used for fabrication. The updated final safety analysis report provided a brief description of the egg-crate tube support plate design and its function to prevent concentration of impurities in the tube-to-tube support plate gap, which could lead to tube degradation. The updated final safety analysis report also described degradation issues of the egg-crate tube support plate design as a result of flow-accelerated corrosion and the corrective actions taken to mitigate this degradation mechanism.

Regulatory Guide 1.187, "Guidance for Implementation of 10 CFR 50.59, Changes, Tests, and Experiments," November 2000, allows the use of NEI 96-07, "Guidelines for 10 CFR 50.59 Implementation," Revision 1 for methods that are acceptable for complying with 10 CFR 50.59. Per NEI 96-07, changes affecting structures, systems, or components that are not explicitly described in the updated final safety analysis report can have the potential to adversely affect structure, system, or

component design functions that are described and thus may require a 10 CFR 50.59 evaluation. Consistent with this guidance, SCE's 50.59 screening evaluated the differences in subcomponents between the original steam generators and replacement steam generators as to whether the differences adversely affected the design function (reactor coolant pressure boundary) of the steam generators. The replacement steam generators were designed and fabricated in accordance with quality assurance requirements, and 10 CFR 50.59 does not require the licensee to presume deficiencies in the design or fabrication.

c. Conclusions

The team determined that no significant differences existed in the design requirements of Unit 2 and Unit 3 replacement steam generators. Based on the updated final safety analysis report description of the original steam generators, ~~one unresolved item associated~~the team determined that the steam generators major design changes were reviewed in accordance with the 10 CFR 50.59 ~~review was~~requirements.

The team identified ~~and~~ two unresolved items:

- Evaluation of Retainer Bar Vibration during the Original Design of the Replacement Steam Generators
- Evaluation of changes in Dimensional Controls during the Fabrication of Unit 2 and Unit 3 Replacement Steam Generators

Additionally, an unresolved item related to a change in a method of evaluation used for the stress analysis calculations is discussed in Section 13~~.0~~ of ~~this~~the report.

5.0 Quality Assurance/Quality Control (Charter Item 5) (Mitsubishi Charter Item 4)

The team reviewed numerous documents from both SCE and Mitsubishi (including sub-contractors, such as Sumitomo) associated with the design, fabrication, and manufacturing of the steam generators for both units. The team reviewed SCE and Mitsubishi's quality assurance program, procedures and implementation activities for the control of purchased material, equipment, and services; inspections; procurement document control; and corrective action and nonconformance activities. Specifically, the team reviewed a sample of Mitsubishi nonconformance reports, audit, survey, all SONGS condition action requests, audits, surveillances, stop work orders, and supplier deviation requests associated with the design and manufacturing of the steam generators. The team concluded that these portions of SCE and Mitsubishi's quality assurance program regarding its safety-related activities were appropriately controlled and implemented.

5.1 SONGS Quality Assurance/Quality Control

a. Inspection Scope

The team reviewed SCE's implementation of their quality assurance program to determine if it complied with the requirements of 10 CFR 50, Appendix B, "Quality Assurance Criteria for Nuclear Power Plants and Fuel Reprocessing Plants." The team reviewed SONGS implementing procedures, quality assurance manual, vendor audits,

procurement specifications, corrective action requests, and numerous other documents, as well as interviewed a number of quality assurance/control and engineering personnel to determine the appropriateness of activities affecting quality conducted during fabrication, manufacturing and delivery of the replacement steam generators.

b. Observations and Findings

No findings were identified.

~~1)~~(1) Policies and Procedures for Supplier Selection and Control

The team reviewed Quality Assurance Manual, Section 17.2.7, "Control of Purchased Material and Services~~,~~," which defines the process used to ensure that purchased material, source material, and subcontracted services conform to applicable codes and standards. Section 17.2.7.2 of the quality assurance manual provided measures for the approval and control of suppliers and describes the methods that SCE uses to conduct technical and quality assurance evaluations of potential suppliers. Specifically, SCE evaluated an audit performed by Dominion (DA 2002-92, "Dominion Audit of Mitsubishi Heavy Industries"). The evaluation was performed and documented in accordance with SONGS policies and implementing procedures that govern the control of purchased material, equipment, and services. The results of SCE Evaluation MHI-01-04, "Evaluation and Review of Contractor, Consultant, Utility or Licensee Audit Report~~,~~," stated that Mitsubishi was conditionally qualified for the fabrication and design of the replacement steam generators. An audit was performed by SCE when a sufficient quantity of work had been performed to demonstrate implementation of Mitsubishi's quality assurance program. Southern California Edison-'s oversight of Mitsubishi also included verification of Mitsubishi's activities during fabrication, inspections, testing and shipment of the procured item. After approximately 14 months from the initial evaluation SCE removed the conditional qualification based on results from Evaluation MHI-10SV-05, "Source Evaluation Report of MHI," dated February 8, 2006, and MHI-3SV-06, "Source Verification Report of MHI," dated May 3 2006, and implementation and verification of specific corrective actions. Part of the SONGS oversight plan of Mitsubishi included the placement of SCE quality assurance/quality control personnel (residents) at the Mitsubishi facility.- Plan SGR-A10183, "Replacement Steam Generator Resident Oversight Plan," described the roles and responsibilities of the resident management, engineering, and quality oversight implementation strategy for the replacement steam generators. This oversight plan was created to provide reasonable assurance that the design, licensing, fabrication, delivery, and acceptance of the SONGS replacement steam generators were performed in accordance with specified SCE, industry, regulatory, and Code requirements. The ~~NRC~~ team noted that after the resident was placed at Mitsubishi, Source Verifications and Surveillances performed by SCE decreased. After the NRC team conducted several interviews with the SCE personnel responsible for oversight of Mitsubishi it was determined that the resident provided adequate oversight of Mitsubishi's activities. Nuclear Oversight Division Project Oversight Quarterly Reports were provided by SCE that demonstrated no decrease in SCE oversight of Mitsubishi. These responsibilities were shifted to the resident at Mitsubishi. During

the review of the documentation generated by the resident the NRC team noted that the resident was performing these activities on behalf of SCE.

~~2~~(2) Purchase Order Review

The team reviewed purchase order 6C294014 from Edison Material Supply LLC, issued September 28, 2004, for the design, fabrication, and delivery of four replacement steam generators for SONGS Units 2 and 3. The procurement order stated that all related work was to be performed in accordance with Specification SO23-617-01, "Specifications for Design and Fabrication of RSG for Units 2 and Unit 3." Specification SO23-617-01 identified the codes, standards, regulations and other documents applicable to the design, fabrication, and delivery of the replacement steam generators. For example Specification SO23-617-01 invoked American Society of Mechanical Engineers Boiler and Pressure Vessel Code, American National Standards, American Society for Testing and Materials Standards, and Electric Power Research Institute Technical Report 016743-V2R1, "Guidelines for PWR Steam Generator Tubing Specifications and Repair," among others.

~~3~~(3) Supplier Audit and Surveillance Reports

The team reviewed a sample of audits and surveillances performed on Mitsubishi to verify SCE's approval process of Mitsubishi and subcontracted services. The team noted that the audits and annual assessments reviewed were adequately documented and provided evidence of Mitsubishi's compliance with quality assurance requirements. The team also verified that audit reports supported the conclusions made by SCE.

5.2 Mitsubishi Quality Assurance/Quality Control

a. Inspection Scope

The team reviewed Mitsubishi implementation of their quality assurance program to determine if it complied with the requirements of 10 CFR 50, Appendix B, "Quality Assurance Criteria for Nuclear Power Plants and Fuel Reprocessing Plants." The team also reviewed a sample of reports from audits and surveys that Mitsubishi conducted of various subcontractors, such as Sumitomo to determine the adequacy of oversight provided by Mitsubishi activities affecting quality and that contracted activities were implemented in accordance with the Mitsubishi-approved quality assurance program. In addition, the team reviewed Mitsubishi's Approved Suppliers List to verify that vendors listed were qualified according to Mitsubishi's specifications and that the list was maintained current.

b. Observations and Findings

No findings were identified.

~~1~~(1) Policies and Procedures for Supplier Selection and Control

The team reviewed Mitsubishi Quality Assurance Manual, Section 4, "Procurement Control," of the which defines the process used to ensure that purchased material, source material, and subcontracted services conform to the applicable requirements of the American Society of Mechanical Engineers Code and to customer procurement documents. Section 4.4 of the Quality Assurance Manual provided measures for the approval and control of suppliers and described the process that Mitsubishi used to conduct surveys or audits, as required. Additionally, Section 4.4 provided guidance for the preparation of purchase specifications and subcontract specifications, including the imposition of regulatory requirements for the American Society of Mechanical Engineers Code, Section III products.

Form

The team reviewed Procedure BUH94-06, "Vendor Evaluation Procedure," which provided guidance on the evaluation of the quality control capability of suppliers by performing surveys, audits and performance evaluations of the supplier quality assurance program. Procedure BUH94-06 provided a detailed description of the entire process to be followed by auditors before, during and after a survey/audit was performed.

No issues were identified.

~~2)~~(2) Supplier Audit and Surveillance Reports

Form

The team reviewed a sample of external audits and surveys to verify Mitsubishi's approval process of Sumitomo Metal Industries, Limited, Steel Tube Works and Sumitomo Metal Industries, Limited, Pipe & Tube Company Wakayama Steel Works. The team noted that the audits and annual assessments reviewed were adequately documented and provided evidence of each company's compliance with quality assurance program requirements. The team also verified that audit checklists were prepared and completed for the audit and contained sufficient objective evidence to support the conclusions made by Mitsubishi.

During the review, the team learned that as a consequence of a ~~Nonconformance~~nonconformance report UHNR-SON-RSG-06N005 related to inadequate lot control during final mill annealing of the tubing, Mitsubishi issued a stop work order to Sumitomo. As part of their process Mitsubishi visited Sumitomo to find the root cause of the nonconformance. After a review of Sumitomo's corrective action, Mitsubishi was able to confirm the adequacy of the corrective actions and preventive actions. Mitsubishi released Stop Work Order UHH-G06A097 imposed on Sumitomo.

On May 8, 2007, Mitsubishi performed Special Audit UHQ-07N004, on Sumitomo, in order to confirm adequacy of activities based on Sumitomo Corrective Action Plan UHCP-07N004. During the audit Mitsubishi found two findings and made one recommendation. Both findings required corrective action from Sumitomo. The Mitsubishi audit indicated that Sumitomo was not able to perform adequate activities for manufacturing heat transfer tubing in accordance with Sumitomo's shop manual. The causes of the deficiencies identified during the audit were a result of Sumitomo's staff failing to follow the shop manual requirements. Because the two findings were related to the stop work order, Mitsubishi did not allow Sumitomo to start

manufacturing activities until adequate implementation of corrective actions were confirmed by Mitsubishi. On June 21, 2007, Mitsubishi verified Sumitomo implementation of the corrective actions. During this visit at Sumitomo, Mitsubishi verified the operations involving straight tube fabrication prior to tube bending operations were performed in accordance with Sumitomo's shop manual. Mitsubishi found that the same type of corrective actions taken by Sumitomo for straight tube fabrication operations applied to tube bending operations. During the review of the implementation of the corrective actions Mitsubishi could not verify acceptability of Sumitomo tube fabrication operations for the tube bending process. Mitsubishi allowed Sumitomo to restart operation only for the straight tube fabrication. On July 13, 2007, Mitsubishi subsequently confirmed the adequacy of Sumitomo corrective actions on tube bending processes. Mitsubishi verified that the bending operations followed the requirement of the Sumitomo' shop manual. On July 17, 2007, Mitsubishi lifted the restrictions imposed on Sumitomo and they were allowed to restart operations.

No issues were identified.

~~3)~~(3) Maintenance of the Approved Supplier List

The team reviewed Mitsubishi Quality Assurance Manual Section 4, "Procurement Control," which defined the controls for the maintenance, distribution, and update of Qualified Vendor List UES-20100006. According to Section 4, the Nuclear Plant Quality Assurance Section had the responsibility for preparing, approving, and distributing the qualified vendor list and any subsequent revisions. In addition, a review by the quality assurance engineer was required prior to final document approval. Mitsubishi was informed of changes to their supplier's quality assurance manuals through procurement requirements imposed on the suppliers on their certificate of qualification as an approved vendor. If the vendor did not maintain their quality assurance program, they were removed from the qualified vendor list. Prior to issuing a Quality Assurance Manual revision, approved vendors were required to send a copy to Mitsubishi for review and approval, after which Mitsubishi updated the qualified vendor list with the latest revision number and date.

No issues were identified.

5.3 Quality Assurance Conclusion

The team concluded that the quality assurance program requirements for quality activities to support the replacement steam generator project were consistent with the requirements of 10 CFR Part 50, Appendix B. The team also concluded that SCE's and Mitsubishi's quality assurance program requirements were appropriately translated into implementing procedures to support the replacement steam generator project.

6.0 Implementation of Steam Generator Industry Information (Charter Item 6) (Mitsubishi Charter Item 3)

a. Inspection Scope

The team reviewed procurement documentation, Mitsubishi design documentation, and the 10 CFR 50.59 review package to assess SCE's and Mitsubishi's consideration and implementation (as appropriate) of operating experience as part of the steam generator replacement project, and in the steam generator tube inspections conducted during the current outages for SONGS Units 2 and 3. The team interviewed various personnel with respect to operating experience considerations relating to major design changes incorporated into the replacement steam generators. The team reviewed operating experience in NRC generic communications and worldwide plant operating experience that might potentially be relevant to conditions observed at SONGS.

b. Observations and Findings

No findings were identified.

The original steam generators installed throughout the domestic fleet of pressurized water reactors, including SONGS, experienced widespread corrosion of the tubes and tube support plates, stress corrosion cracking of the tubes, and wear at tube supports. These problems led to the replacement of nearly all of the original steam generators, in most cases well before the end of their design lifetime. For SONGS, the design of the replacement steam generators included a number of design changes to correct life limiting problems with the original steam generators, based in part on consideration of SONGS-specific and industry-wide operating experience. This included use of more corrosion resistant materials for the tubing and tube support plates to mitigate corrosion and stress corrosion cracking issues experienced in the past. The licensee's bid specification required that the stay cylinder feature of the original steam generators be eliminated to maximize the number of tubes that could be installed in the replacement steam generators and to mitigate past problems with tube wear at tube supports caused by relatively cool water and high flow velocities in the central part of the tube bundle. Mitsubishi employed a broached trefoil tube support plates instead of the egg crate supports in the original design. In addition to providing for better control of tube to support plate gaps and easier assembly, the broached tube support plates were intended to address past problems with the egg crate supports by providing less line of contact and faster flow between the tubes and support plates, reducing the potential for deposit buildup and corrosion. Mitsubishi selected a u-bend configuration for the upper part of the tube bundle instead of the square bend design of the original steam generators based on its experience that u-bends were easier to fabricate and support and were easier to inspect.

The team's review of Mitsubishi design documentation for the anti-vibration bars indicates that Mitsubishi considered wear in the u-bend region as the most important issue affecting the anti-vibration bar design. Mitsubishi reviewed operating experience regarding wear in the u-bend region of replacement steam generators and trended the experience data as a function of steam generator manufacturer, tube packing arrangements (tube pitch, square versus triangular arrays), and steam generator size. The SONGS steam generators are relatively large, and Mitsubishi acknowledged that this and the tight tube packing geometry could affect wear experience. Mitsubishi stated that the SONGS replacement steam generator were designed to minimize these concerns by providing more support points with shorter spans in the u-bend region along with effective zero gaps between the tubes and anti-vibration bars during steam

generator operation. Mitsubishi manufacturing was designed on achieving very small uniform gaps between the tubes and anti-vibration bars during assembly.

Engineering Change Package NECP 800071703 for the replacement steam generators evaluated industry operating experience as it related to the manufacture and operation of the replacement steam generators. Several of these experiences related to fabrication issues, lack of weld quality, material defects, loose parts, lack of cleanliness, and failure to fully expand tubes in the tubesheet. The licensee found most of these issues to be applicable to the replacement steam generators at SONGS, but that these kinds of issues would be adequately addressed by the supplier's (typically Mitsubishi) augmented quality assurance procedures and continuous quality oversight by the licensee. The licensee also cited augmented receipt inspections, in-process verifications, foreign material exclusion and control, and cleanliness inspections on the part of the supplier or the licensee, as applicable, as addressing these issues.

The licensee addressed industry operating experiences relating to stress corrosion cracking of steam generator tubing by noting that the Alloy 690 thermally treated tubing in the replacement steam generators were expected to be substantially more resistant to stress corrosion cracking than the tubing alloys used in earlier model steam generators. The licensee also addressed experience at another unit which experienced tie rod and consequential tube bow as a result of differential thermal expansion between the tubes and shroud and unexpected interference between some tube support plates. The stay rod (equivalent to tie rods at other unit) and shroud material for the replacement steam generators have been selected to have similar coefficients of thermal expansion which would preclude a similar problem.

Steam Generator Degradation Assessment 51-9176667-001 (prepared by AREVA) supporting steam generator inspections during the current outages for Units 2 and 3 evaluated industry operating experience relating to steam generator in-service inspections. This included operating experience reports, including NRC Information Notice 2010-05, "Management Of Steam Generator Loose Parts And Automated Eddy Current Data Analysis," relating to eddy current test probe issues and data analysis errors. In response to these issues, SCE personnel stated that specific training was given to the data analysts at SONGS on the lessons learned from these experiences and where applicable, appropriate data was included in the SONGS site specific performance demonstration. The licensee also described additional measures that would be taken at SONGS to address these issues. The review also addressed operating experience reports dealing with unexpected tube support indications or lack thereof. In response, SCE stated that indicated anti-vibration bar locations by eddy current will be compared to the anti-vibration bar locations specified in the Mitsubishi design drawings.

Steam Generator Degradation Assessment 51-9176667-001 also addressed numerous operating experience reports involving loose parts and foreign objects in steam generators, including several instances involving resultant damage to steam generator tubing. These reports included NRC Information Notices 2004-10, "Loose Parts in Steam Generators," 2004-16, "Tube Leakage Due to a Fabrication Flaw in a Replacement Steam Generator," and 2004-17, "Loose Part Detection and Computerized Eddy Current Analysis in Steam Generators." Some of these reports dealt with eddy

current probes, or pieces of probes, which were left behind as loose parts on the primary side. Most of the operating experience reports related to lose parts and foreign objects on the steam generator secondary side. In response, SCE approach for addressing this issue was through procedure changes and secondary side visual inspections which included the open tube lane, the entire peripheral annulus, and appropriate visual examination followup on eddy current indications of possible loose parts. The inspection with the exception of the loose parts component was performed, as scheduled, during the current refueling outage for SONGS Unit 2. The inspection for loose parts will be performed at the first scheduled inspection during the next refueling outage. The team noted that possible loose parts indications were not found during the 100 percent eddy current test inspection of the Unit 3 steam generators during the current outage. The team also noted that secondary side visual inspections were performed in the upper bundle area of the Unit 3 steam generators to evaluate the tube-to-retainer bar intersections and in a limited area above the 7th tube support plate.

The NRC staff issued many generic communications relating to steam generator tube integrity issues since the 1980s. The team reviewed these documents and determined that many of these related to the potential for stress corrosion cracking of the tubes which the staff found was not expected to be a concern for the thermally treated Alloy 690 material in the SONGS replacement steam generators by virtue of its greatly enhanced resistance to stress corrosion cracking. Most of the others related to problems encountered with eddy current flaw detection and sizing, the occurrence and detection of loose parts/foreign objects, and monitoring of primary to secondary leakage. ~~The team's review indicated that lessons learned from these NRC generic communication documents had generally been incorporated into industry guideline documents relating to steam generator inspections, monitoring of primary to secondary leakage, and other guidelines documents prepared by the Electrical Power Research Institute. This information was incorporated into the licensee's inspection and leakage monitoring guidelines.~~

The team reviewed NRC generic communications not falling into one of the above categories for potential relevance to SONGS Unit 2 and 3. One of these was NRC Information Notice 2004-16 concerning an operational leakage event at another plant due to damage caused by a packing screw during transport to the steam generator manufacturer. The licensee stated in its steam generator change package that this incident was precluded for SCE by prohibiting the use of screws and nails as fasteners for tubing shipping crates. The licensee also addressed NRC Information Notice 2007-37, "Buildup of Deposits in Steam Generator," concerning fatigue of a low row u-bend at a foreign unit as a result of deposit build up and lack of support for the low row u-bend. Engineering Change Package NECP 800071703 specified that this type of incident was precluded in the replacement steam generators by virtue of anti-vibration bar supports extending to the low row u-bends. Steam Generator Degradation Assessment 51-9176667-001 documented that this type of problem reflected an advanced stage of deposit accumulation that was not anticipated for the foreseeable future in the SONGS replacement steam generators.

c. Conclusions

The team's review indicated that lessons learned from these NRC generic

communication documents had generally been incorporated into industry guideline documents relating to steam generator inspections, monitoring of primary-to-secondary leakage, and other guidelines documents prepared by the Electrical Power Research Institute. This information was incorporated into SCE's design specifications, inspection and, leakage monitoring guidelines.

7.0 Packing, Shipping, Handling, and Receipt Inspection (Charter Item 7)

a. Inspection Scope

The team interviewed licensee personnel involved with the packing, shipping, handling, and receipt inspection of the replacement steam generators. In addition, the team reviewed SCE receipt acceptance criteria to assess if critical attributes were appropriately specified and if the licensee had the ability to assess acceptability of meeting those acceptance criteria. The team reviewed evaluations associated with supplier deviation reports, nuclear notifications and changes to handling specifications. With respect to replacement steam generators the team focused on differences in SONGS shipping, handling, and receipt acceptance between the Unit 2 and 3 steam generators from the manufacturing site in Japan to final installation on site.

b. Observations and Findings

~~No findings were identified.~~

The team identified three unresolved items for which additional information is required to determine if performance deficiencies exist or if the issues constitute violations of NRC requirements.

(1) Introduction: The team identified an unresolved item associated with Unit 3 steam generators not shipped in accordance with specification SO23-617-01, "Design and Fabrication of Replacement Steam Generators for ~~Units~~Unit 2 and Unit 3~~" (title does not match Documents Reviewed section – please check other titles for your sections)~~," Revision 4, and requirements for handling, storage, and shipping. Specifically, ANSI N45.2-1977, "Quality Assurance Program Requirements for Nuclear Facilities," required a special protective environment for handling, storage, and shipping of the replacement steam generators. However, because of schedule changes, the Unit 3 protective environment which included maintaining a nitrogen pressure and a monitoring plan was altered significantly.

Description: The team evaluated specifications associated with the shipping and handling of the Unit 2 and 3 replacement steam generators. Based on the information evaluated by the team, the steam generators procurement and shipping specifications required monitoring and maintenance of nitrogen atmosphere inside the replacement steam generators during shipment. Supplier Deviation Request SDR 10041870-09091 dated December 1, 2009, documents a request "not to control the positive pressure, the dew point of nitrogen, and the oxygen content on the primary and secondary side of the Unit 3 replacement steam generators to accelerate delivery schedule."

Specification SO23-617-01, ~~"Design and Fabrication of Replacement Steam Generators for Units 2 and 3," Revision 4,~~ Section 3.16.3, specifies the supplier shall be responsible for monitoring and maintaining nitrogen atmosphere inside the steam generators during their shipping from Mitsubishi to the California port discharge point. The team noted that Unit 3 steam generators did not require, monitoring or control of dew point, oxygen concentration, inside nitrogen pressure. The team could not identify if this was properly evaluated (Reference Section 5 of shipping and handling procedure SO23-617-1-M1350).

Additional review and follow up will be required to review the evaluations and corrective actions associated with the maintaining the Unit 3 replacement steam generators protective environment during shipping and then determine whether this issue represents a performance deficiency or constitutes a violation of NRC requirements. This issue is identified as URI 05000362/2012007-05, "Shipping Requirements not in Accordance to Industry Standards."

(2) Introduction: The team identified an unresolved item associated with the shipping and handling specifications requiring methods of tube bundle support. The team could not determine if this requirement to provide a tube bundle support method was adequately evaluated by SCE.

Description: Based on the information gathered by the team on shipping and handling specifications associated with the Unit 2 and 3 replacement steam generators, the team could not determine that Mitsubishi or SCE adequately considered the potential impact of not providing methods of tube bundle supports as required in Specification SO23-617-01, ~~"Design and Fabrication of Replacement Steam Generators for Units 2 and 3,"~~. In response to the team questions regarding tube bundle support methods, the team was provided with results from Procedure L5-04GA069, "Sagging Measurement Procedure," Revision 7. However the team noted the procedure is considered a non-quality affecting procedure and used for reference only.

Additional review and follow up will be required to review the evaluations associated with the requirements to provide tube bundle support during shipping for the Unit 2 and 3 steam generators and then determine whether this issue represents a performance deficiency or constitutes a violation of NRC requirements. This issue is identified as URI 05000362/2012007-06, "Shipping Requirements not in Accordance to Design and Fabrication Specifications."

(3) Introduction: The team identified an unresolved item associated with evaluation of excessive shipping induced forces of Unit 3 replacement steam generator 3E-088.

Description: The team reviewed the SG shipping accelerometer data reports for both Unit 2 and Unit 3. In addition, the team also reviewed shipping and handling records and identified the following:

- Different transoceanic shipping companies and ships were used (U2: Happy Ranger, U3: Enchanter)
- During the discharge from the ship Unit 3 replacement steam generator 3E0-88 (3B) recorded simultaneous signals on the three attached accelerometers
- Unit 3 steam generator 3E0-88 was the only steam generator to record simultaneous signals on the three attached accelerometers
- Unit 3 steam generators received significantly more accelerometers hits compared to Unit 2

Unit 3 replacement steam generator 3E0-88 accelerometers indicated up to a 1.23 g spike with a simultaneous recording on all three of the attached accelerometers. Mitsubishi provided an evaluation of the forces which showed loads were within allowable stress limits but exceeded stress for an operating basis earthquake. The team was not able to determine if this was properly considered.

Additional review by the NRC is required to fully assess if the shipping forces contributed to the tube-to-tube wear in Unit 3 and then determine whether this issue represents a performance deficiency or constitutes a violation of NRC requirements. This issue is identified as URI 05000362/2012007-07, "Unit 3 Steam Generator ~~3E-088~~ 3E0-88 Stresses Related to Handling."

c. Conclusions

The team identified three unresolved items related to the shipment of Unit 3 steam generators; however, the team did not identify any connection between these shipping changes and the unexpected tube-to-tube wear.

The unresolved items are :

- Shipping Requirements not in accordance with Industry Standards
- Shipping Requirements not in accordance with Design and Fabrication Specifications
- Unit 3 Steam Generator 3E0-88 Stresses Related to handling

8.0 Thermal-hydraulic and Flow Induced Vibration Modeling (Charter Item 8)

a. Inspection Scope

The team conducted and overall review of Mitsubishi thermal-hydraulic design documents and drawings used in the manufacture of the Units 2 and 3 steam generators. The team developed an independent ATHOS model to run simulations for various operating conditions to assess thermal-hydraulic phenomena in the steam generators and assess differences in key parameters based on changing operating conditions. The objective of the modeling was to understand the interactions of the key parameters to compare ATHOS modeling results to the degradation trends found during the eddy current inspections.
~~The team was not able to perform any independent tube vibration analysis because the NRC does not have the associated vibration software programs. However, since two~~ The team reviewed portions of the vibration modeling. Two key outputs of the thermal-hydraulic code are inputs to the vibration model, the ATHOS model results for fluid velocity and void fraction were used to predict increases or decreases in vibration forces and amplitude.

b. Observations and Findings

~~No findings were identified.~~
The team identified one unresolved item for which additional information is required to determine if a performance deficiency exists or if the issue constitutes a violation of NRC requirements.

(1) Introduction: The team identified an unresolved item associated with the adequacy of Mitsubishi's FIT-III thermal-hydraulic code. The FIT-III code predicted non-conservative low velocity and low void fraction results which were used as inputs to the vibration code FIVATS. These non-conservative thermal-hydraulic results lead Mitsubishi to conclude that margins to instability were significantly larger than they actually were.

Description: Replacement steam generators were designed and manufactured in accordance with SONGS Design Specification SO23-617 ~~-1, "Conformed Specification for Design and Fabrication of Replacement Steam Generators for Unit 2 and Unit 3," Revision 4 and~~1and ASME Section III, "Rules for Construction of

Nuclear Facility Components". The replacement steam generators had enhanced materials and maintenance ~~features and were considered like-for-like replacement of the original steam generators.~~

The tube bundle, comprised of 9727 u-tubes, is supported by a set of seven tube support plates which are maintained and spaced by a network of tie-rods. The ends of the u-tubes were welded onto the tube sheet lower face cladding and were full depth expanded in the tube sheet holes. The u-bends are supported by a set of 6 anti-vibration bars, having a maximum of 12 contact points, in the center of the bundle. For shorter tubes near the periphery, a fewer number of anti-vibration bars are present.

One of the major enhancements of the replacement steam generators was the use of Alloy-690 tubing versus Alloy-600 for corrosion resistance. Alloy-690 has lower heat conductivity so, to achieve the same power, the heat transfer surface area must be increased by at least 10 percent. This required more tubes to be used in the replacement steam generators. The increased number of tubes resulted in a more tightly compacted tube bundle and elimination of the stay cylinder. The increase in the number of tubes could lead to increases in primary reactor coolant flow through the steam generators. Orifices were ~~installed in~~machined as part of the steam generator inlet nozzles to ensure maximum allowed primary system flowrates were not exceeded.

The tube layout indexing or incrementation used in these generators was smaller than other replacement steam generator designs. The tighter indexing results in smaller pitch/diameter ratio in critical regions of the tube bundle u-bends. In addition, it was noted that the anti-vibration bar support structure is not connected to the wrapper for lateral or vertical support; instead the anti-vibration bar system structure is only supported vertically by resting on the tubes.

Other operational and physical comparisons of the replacement steam generators and original steam generators were reviewed by the team and no significant differences were noted.

Additional review by the NRC is required to fully assess the adequacy of Mitsubishi's FIT-III thermal-hydraulic code and then determine whether this issue represents a performance deficiency or constitutes a violation of NRC requirements. This issue is identified as URI 05000362/2012007-08, "Non-Conservative Thermal-Hydraulic Model Results."

~~8.1~~(2) Thermal-~~hydraulic~~Hydraulic and Vibration Assessments

The replacement steam generators thermal hydraulic operation and responses were based on the steam generator design geometric characteristics and operating parameters of the reactor coolant flow and temperature and the secondary feedwater flow and temperature. Calculations were performed for 0 to 100 percent power, beginning-of-life and end-of-life conditions considering limiting tube plugging and fouling. The important actual operating parameters selected for use in the model were saturation pressure, circulation ratio, steam flowrate, tube and shell side pressure drops, water and steam inventories, and global heat transfer coefficient.

Mitsubishi used the SSPC (Steady State Performance Calculation) code to compute these operational parameters, as described in Mitsubishi Document L5-04GA510, "Thermal and Hydraulic Parametric Calculations," Revision 5. The FIT-III code was used to determine thermal-hydraulic fluid flow conditions, with the results described in Mitsubishi Document L5-04GA521, "3D Thermal and Hydraulic Analysis," Revision 3. The FIVATS code was used to compute tube stability ratios that are used to predict tube vibration, with results described in Mitsubishi Document L5-04GA504 "Evaluation of Tube Vibration," Revision 3. In addition, the ABAQUS code was used compute stress and natural vibration frequency, and a code called IVHET was used for tube wear analysis. The key design code for tube bundle design and vibration analysis is thermal-hydraulic code FIT-III since it computes the two key parameters (fluid velocity and density[1]) that are the primary contributors to the onset of fluid-elastic instability, which indicates the potential for excessive tube vibration.

The Mitsubishi acceptance ~~criteria~~criterion for vibration was to avoid fluid-elastic instability of tube spans by keeping the calculated stability ratios less than 1. Mitsubishi used the approach given in the ASME code Section III, Division 1, Appendix N-1330, "Flow-Induced Vibration of Tubes and Tube Banks," to calculate stability ratios and they also avoided natural frequencies of the tubes similar to the reactor coolant pump dynamic frequencies.

Design specific flow induced vibration analysis was performed for select U-bend tubes exposed to the greatest vibration risk, generally those with longest unsupported length under most limiting operating condition (lowest steam pressure, end of life design conditions). The phenomenon of fluid-elastic instability of tubes is characterized by cross-flow velocity (for out-of-plane mode) and normal velocity (for in-plane mode) where the local velocities exceed a critical velocity value (given via Conners' Equation[2]). The parameter of local velocity divided by critical velocity is referred to as stability ratio. The accuracy of calculating fluid-elastic instability is limited based on inputs that are best determined by design-specific mockup test data. Mitsubishi did not perform design-specific mockup tests, but used generally accepted test data, and other data based on Mitsubishi test rigs that were not specific to the SONGS replacement steam generator design.

If operating velocities reach this critical value, vibration amplitudes can increase rapidly and fluid-elastic instability forces can lead to rapid pulsation and damaging of tubes. The U-bend region is most susceptible because (1) the local fluid has a higher void fraction[3], with high velocities; (2) the fluid flow is in a direction normal to the tube, and (3) the anti-vibration bars are limited in their dampening capability along the plane of the tubes. Traditional design of anti-vibration bar systems have not considered in-plane fluid forces since it was accepted that the rigidity and dampening strength of the tube in this direction was adequate to preclude it. This event at SONGS is the first US operating fleet experience of in-plane fluid-elastic instability, sufficient to cause tube-to-tube contact and wear in the U-bend region.

---

[1] Void fractions and density are inversely proportional.

[2] Fluidelastic Vibration of Heat Exchanger Tube Arrays, Journal of Mechanical design – Volume 100 – April 1978, H.J. Connors, JR.

[3] ~~Void fractions and density are inversely proportional.~~

The team noted that Design Specification SO23-617-1, ~~"Conformed Specification for Design and Fabrication of Replacement Steam Generators for Unit 2 and Unit 3," Revision 4,~~ did not address specific criteria for stability ratio and does not mention fluid-elastic instability. The team did find that the Mitsubishi calculated design values for stability ratios did not exceed 0.5. It is important to note, that each steam generator manufacturer has different design values for maximum stability ratios; therefore there is no standard value. The smaller that the design stability ratio is (has to be less than 1), the more margin to fluid-elastic instability.

Mitsubishi computed the flow-induced vibration status of the steam generators in Document L5-04GA504, "Evaluation of Tube Vibration," Revision 3. The critical flow velocity, Uc, was obtained using the Connors' Equation based on output fluid velocities and densities from their FIT-III thermal-hydraulic model. The critical flow velocity is then calculated based on damping ratio, tube mass, tube outside diameter, averaged local cross flow gap velocity, and fluid density per selected tube. The method is based on formulations given in the ASME code Section III, Division 1, Appendix N-1330, "Fluid Elastic Instability". The ratio of normal-to-tube cross flow gap velocity to this critical velocity defines the "stability ratio".

Steam generator vendors must develop specific methods based on the thermal-hydraulic code selected and experimental data used to determine coefficients in the Conners' Equation for their particular steam generator design. The experimental data used ~~justify~~in determining the ~~methods~~coefficients can be developed from in-house tests or taken from published industry data. Mitsubishi indicated that in their methodology two conservatisms were used in their bundle vibration analysis: (1) FIT-III gap velocities were averaged and multiplied by 1.5 and (2) one of 12 anti-vibration bars contacts were assumed to be inactive. The team noted that in Mitsubishi Document L5-04GA504, "Evaluation of Tube Vibration," Revision 3, the 1.5 multiplier was not an added conservatism but a requirement, needed to match test data results.

The team developed an independent model of the new steam generators using the ATHOS thermal hydraulic code[4]. The calculations were intended to assess operating cycle differences between Units 2 and 3 steam generators and review thermal hydraulic phenomena within the steam generators in order to investigate key parameters and causal factors for the excessive tube wear rates. The NRC ATHOS calculations determined that the differences in primary inlet temperature and steam flow between the units were negligible. NRC ATHOS results indicated high void fractions and high u-bend gap velocities existed in the bundle as compared to Mitsubishi FIT-III analyses used for design.

---

[4] ~~ATHOS3~~ATHOS/SGAP Version 3.~~0 S: A Computer Program for Thermal Hydraulic~~1: Analysis of the Thermal-Hydraulics of a Steam ~~Generators, February 2005 (need to verify this is the version that~~Generator, 2008
[4] R. Voilette, M. J. Pettigrew, N. W. Mureithi, "Fluidelastic Instability of an Array of Tubes Preferentially Flexible in the ~~NRC has a license for use. Did Carl re run the ATHOS model using newest version and did it change our results?)~~Flow Direction Subjected to Two-Phase Cross Flow," Trans. ASME, Journal of Pressure Vessel Technology, 128, 148 (2006).

Mitsubishi provided a comparison of their ATHOS model to their FIT-III model results. The Mitsubishi ATHOS model fluid velocities were ~~2.5 to~~approximately 3 times higher than the FIT-III model velocities with the 1.5 multiplier applied. Other independent code calculations, including an analysis by Westinghouse using their in-house modified version of ATHOS and an analysis by AREVA using their French code CAFCA4 showed similar thermal-hydraulic results (up to 4 times higher velocities than FIT-III) as those computed in the Mitsubishi ATHOS results and the NRC independent ATHOS calculations. Based on these comparisons, it was concluded that the FIT-III code and model results used for design were non-conservative even with the multiplier applied.

Most of the experimental work in fluid-elastic instability has been carried out for two-phase flow, with an air-water medium. Accepted industry data, as presented by the Mitsubishi, shows that in staggered array bundles (triangular pitch, pitch/diameter =1.33), the onset of tube instability for modern steam generators, such as SONGS steam generators, can start at tube gap velocities above 6 meter/sec (pending effectiveness of the dampening structure) ~~(please add reference for this statement).~~[4]. The NRC ATHOS model results indicated that there was a substantial localized region in the lower hot side of the u-bends where velocities exceeded 6 m/sec.

The NRC ATHOS calculations were compared to gap velocities computed both with the Mitsubishi ATHOS and the FIT-III models. Since tube R142C88 was the only one common for each of the analyses, it can be used as basis for comparison. The effective peak velocities were as follows:

- NRC ATHOS – 5.2 m/sec
- Mitsubishi ATHOS – 5.6 m/sec
- Mitsubishi FIT-III – 2.5 m/sec

Both the NRC and Mitsubishi ATHOS results were reasonably consistent and strongly suggested that high velocities coupled with high void fraction were primary causal factors in the tube fluid-elastic instability and the excessive wear patterns observed in the Unit 3 steam generators.

The team reviewed the verification and validation of both the Mitsubishi FIT-III thermal-hydraulic and FIVATS tube vibration models as stated in Specification SO23-617-1, Revision 4. The specification required Mitsubishi to design and build the steam generators in accordance with ASME NQA-1, "Quality Assurance Requirements for Nuclear Facility Applications," 1994, Subpart 2.7 "Computer Software" and Mitsubishi's quality assurance program.

The team reviewed Mitsubishi's verification and validation Report KAS-20050201, "FIT-III Code Validation Report," Revision 2. The report concluded the FIT-III code was valid for prediction of velocity and density behavior of two-phase flow under nominal conditions for the secondary side of PWR steam generators.

The team reviewed Mitsubishi's verification and validation Report KAS-20040253, "FIVATS Code Validation and Qualification Report," Revision 3. The FIVATS model was designed to calculate the stability ratios by using the flow velocity and density

distributions from the FIT-III model. The FIVATS model primarily used the Conners' Equation, and validation was performed mainly by comparison to hand calculation; however, Mitsubishi used a mock-up test facility with a simple anti-vibration bar structure as part of their validation effort. The report concluded that adequate validation and qualification was performed to show compliance to software requirements and that the code could predict flow-induced vibration.

The team requested additional information as part of the verification and validation of the FIT-III thermal-hydraulic model. Mitsubishi provided several additional reports. One of the reports showed benchmarking comparisons to a French test facility program called CLOTAIRE in 1986. Another report conducted in 2002, showed comparisons between FIT-III and ATHOS, and concluded that both codes had good correlation with the CLOTAIRE experimental data. Because of the limited information provided, the team could not determine the validity of the benchmarking of FIT-III.

Overall, the team determined that the validation and verification of the FIT-III code did not present overwhelming evidence that this code has been adequately benchmarked. The team did not find any problems with the validation of the FIVATS code.

~~8.2~~(3) NRC ATHOS Results

Figures 1 through 4 (different view angles of same results) show results, with low $T_{hot}$ and low steam pressure and present a 3D isometric encapsulation of steam qualities (red scale) at and above 0.9 (i.e., void fraction > 0.99) and field velocities at and above 6.0 m/sec (white scale).

The ATHOS model results of high steam quality and steam velocity closely align with the area of concern (tube-to-tube wear) in the Unit 3 replacement steam generators. In Figure 5, the code predicted regions of high void fraction and high steam velocities (vertically located z-axis cut at about 20 inches above the 7$^{th}$ TSP) are superimposed with tube-to-tube wear indications from Unit 3 steam generator 3E0-88.

The tube-to-tube wear indications align with anti-vibration bar wear indication trends; however, the anti-vibration bar wear patterns appear to indicate a more square-like, essentially rectangular behavior that suggests that there may also be a mechanical, fabrication, assembly, and/or material contribution to the tube-to-tube wear degradation.

**Figure 1**

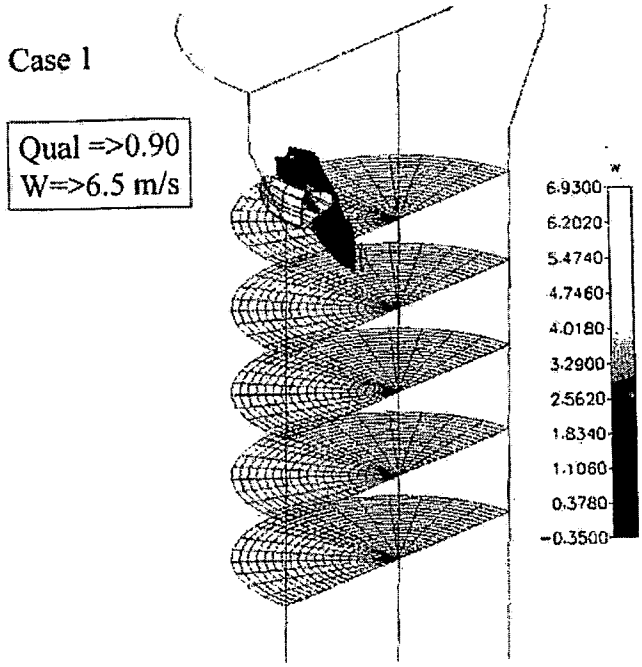
Case 1
Qual =>0.90
W=>6.5 m/s
W
6.9300
6.2020
5.4740
4.7460
4.0180
3.2900
2.5620
1.8340
1.1060
0.3780
-0.3500

**Figure 2**

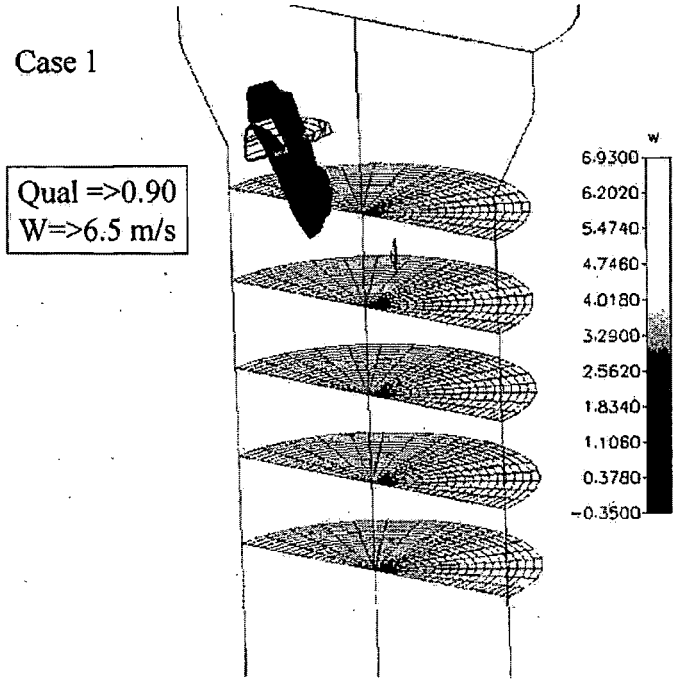


**Figure 3**

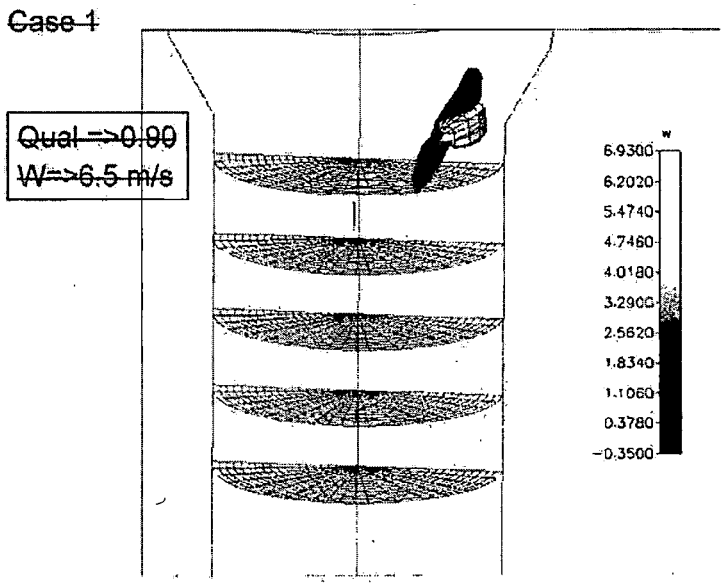

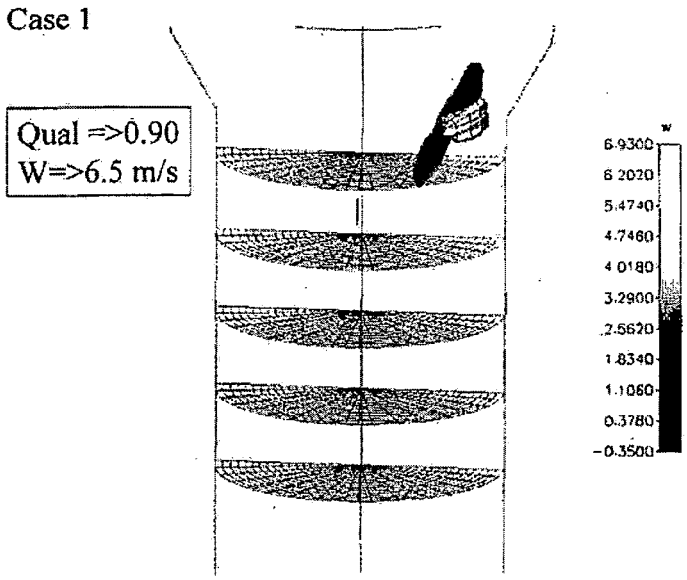
Case 1
Qual =>0.90
W=>6.5 m/s
W
6.9300
6.2020
5.4740
4.7460
4.0180
3.2900
2.5620
1.8340
1.1060
0.3780
-0.3500

**Figure 4**

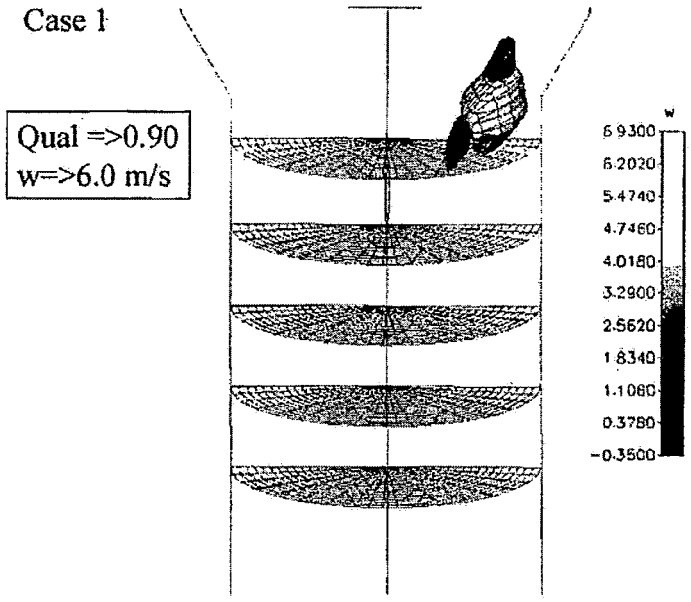
Case 1
Qual =>0.90
w=>6.0 m/s
W
6.9300
6.2020
5.4740
4.7460
4.0180
3.2900
2.5620
1.8340
1.1060
0.3780
-0.3500

Case 1

Qual =>0.90
w=>6.0 m/s

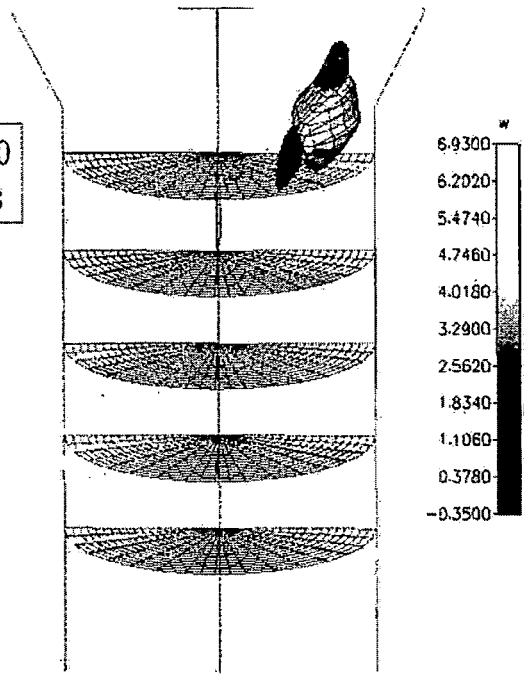




Enclosure

**Figure 5** The ATHOS code predicted regions of high void fraction and high steam velocities are superimposed with tube-to-tube wear indications from Unit 3 steam generator 3E0-88

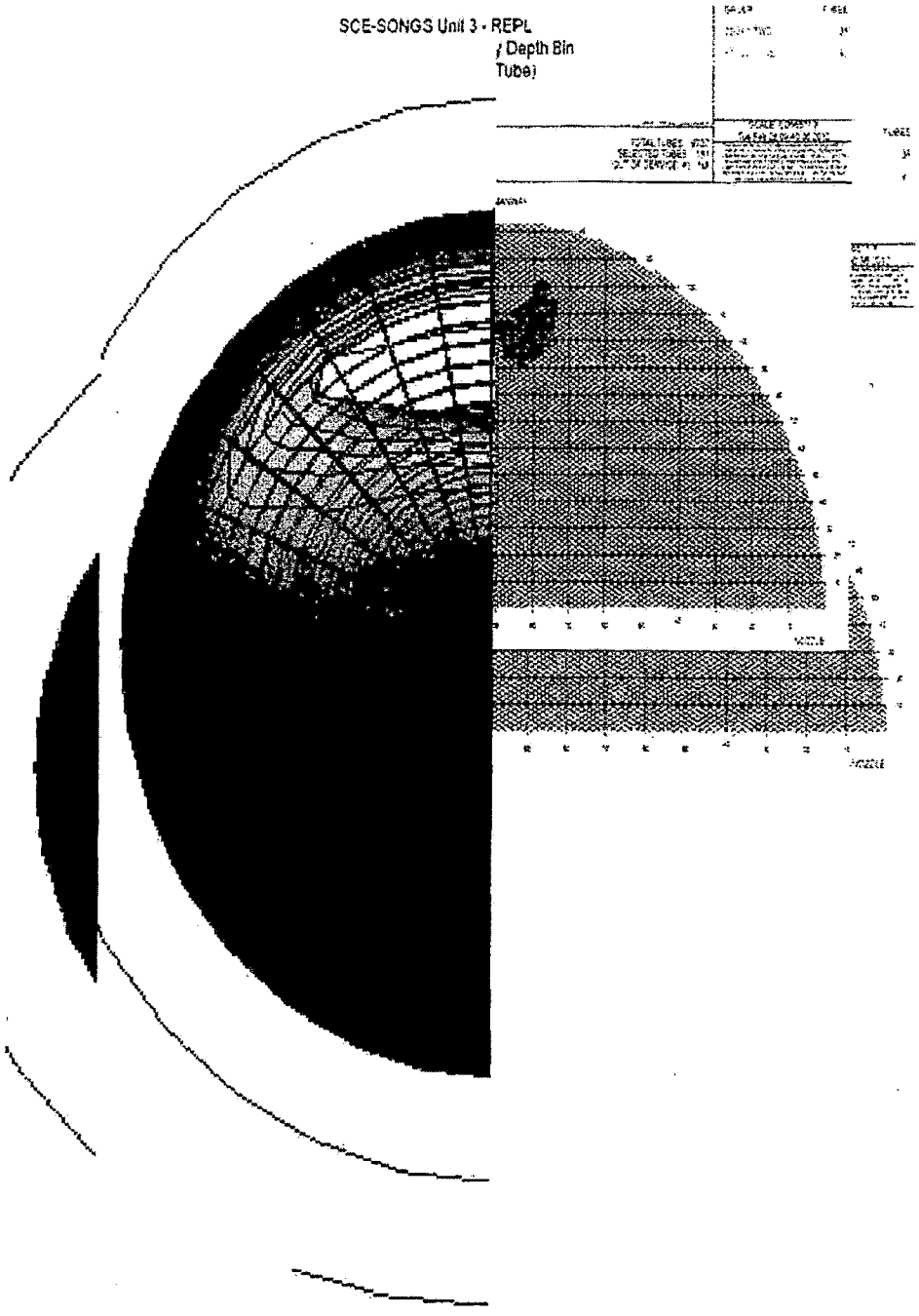

The NRC analysis indicated a correlation with the tube-to-tube wear based on a combination of high void fraction and high steam velocities. It should be noted that the traditional forcing function, fluid velocity squared times density, does not show good agreement with the tube-to-tube wear patterns. This indicated that the high quality steam fluid velocities and high void fraction may be sufficiently high to cause conditions in the generators conducive for onset of fluid-elastic instability.

The above analyses apply equally to Units 2 and 3, so it does not explain why the accelerated fluid-elastic instability wear damage was significantly greater in Unit 3 steam generators. The ATHOS thermal-hydraulic model predicts bulk fluid behavior based on first principals and empirical correlations and as a result it is not able to evaluate mechanical, fabrication, or structural material differences or other phenomena that may be unique to each steam generator. Therefore this analysis cannot account for these mechanical factors and differences which could very likely also be contributing to the tube degradation.

~~8.3~~c. Conclusion

The team identified one unresolved item associated with the non-conservative FIT-III thermal-hydraulic model results.

Based on independent NRC thermal-hydraulic analysis, the team concluded that the SONGS replacement steam generators were not designed with adequate margin to preclude the onset of fluid-elastic instability. Therefore unless changes are made to the operation or configuration of the steam generators, high fluid velocities and high void fractions in localized regions in the u-bend will continue to cause excessive tube wear and accelerated wear that could result in tube leakage and/or tube rupture. The deficiencies appear to be related to Mitsubishi's FIT-III thermal hydraulic code having predicted non-conservative low velocity results and low void fractions. These results ~~lead~~led Mitsubishi to conclude that margins to instability were significantly larger than they actually are. This assessment is based on eddy current data, NRC ATHOS analysis, Mitsubishi ATHOS analysis, and other thermal-hydraulic analyses completed by Westinghouse and AREVA that all identified significantly higher fluid velocities and void fractions than FIT-III.

Based on the cause evaluation and corrective action plan, SCE determined that the best solution to prevent tube-to-tube wear was to conservatively plug and stabilize the affected areas. By taking the impacted tubes out-of-service, SCE determined that this should reduce the potential for localized fluid velocities reaching critical velocity. In addition, in order to ensure sufficient margin to preclude the onset of fluid-elastic instability, SCE determined that reactor power would also have to be reduced. At this time SCE is still developing additional corrective actions to prevent tube-to-tube wear. The actions have not been finalized and no determination has been made concerning the appropriate power level. The NRC has not made any conclusions on the proposed corrective actions. Once the corrective actions have been finalized, they will be ~~reviewed and evaluated~~inspected as part of the Confirmatory Action Letter followup inspection.

9.0 Risk Assessment (Charter Item 9)

a. Inspection Scope

The team reviewed the steam generator tube leak and failures of multiple steam generator tubes during in-situ pressure testing to support an assessment of the risk of the degraded steam generator tubes during various accident conditions, including a main steam line break accident.

b. Observations and Findings

No findings were identified.

An NRC senior reactor analyst ~~is currently working with SCE~~ performed a preliminary risk assessment ~~personnel to determine~~. The risk is composed of two parts: (1) a non-consequential steam line break that induces a steam generator tube rupture, specifically involving the degraded tubes; and (2) an elevated risk of a tube rupture as an initiating event.

Assuming that a steam line break would cause the degraded steam generator tubes to rupture during a "T/2" exposure period of 6 months yielded a change in the large early release frequency of 4E-6/yr. However, SCE informed the NRC that a calculation is under review that will likely indicate that the differential pressures generated by a steam line break would not be large enough to rupture the degraded tubes as long as operators successfully implemented their emergency procedures. If this is confirmed, the risk associated with ~~the loss of tube integrity for multiple tubes~~steam line breaks will be significantly reduced.

Although in this case the degraded condition of the tubes was manifested as a small primary to secondary leak, it is possible that a full-blown rupture could have been the first indication. The baseline core damage frequency of a steam generator tube rupture, according to the SONGS SPAR model, is 4.26E-7/yr. Because of an unmitigated bypass of containment, the large early release frequency is also 4.26E-7/yr. Assuming conservatively that the steam generator tube rupture frequency would at least double, the increase in large early release frequency attributable to the degraded tubes would be approximately 2.13E-7/yr (taking into account a 6-month exposure period).

It should be noted, this is a preliminary assessment of the risk requiring additional information and inspection to ascertain whether a performance deficiency exists. This does not include or preclude regulatory or enforcement action by the NRC.

10.0 Assess Quality Assurance, Radiological Controls, and Safety Culture Components (Charter Item 10)

a. Inspection Scope

The team reviewed the event, operator actions, management decisions, steam generator eddy current examinations, in-situ pressure testing, and tube plugging and

stabilization activities to determine whether issues related to quality assurance, radiological controls, or safety culture existed.

b. Observations and Findings

No findings were identified.

Region IV radiation protection inspectors reviewed the estimated offsite radiation exposure from the actual steam generator tube leak on Unit 3 steam generator 3E0-88 that occurred on January 31, 2012, including the potential dose consequence to site workers and members of the public. The licensee determined that the Unit 3 steam generator tube leak resulted in a release of gaseous effluents into the public domain, and the primary radionuclides released were argon-41, xenon-133, and xenon-135. The release resulted in an estimated 0.0000452 (4.52 E-5) mrem dose to the public. Inspectors also reviewed design drawings and radiation monitor data, performed plants tours, and confirmed the licensee's use of the offsite dose calculation methodology. ~~The~~

c. Conclusions

The Region IV radiation protection inspectors concluded that the Unit 3 steam generator tube leak was detected by the condenser steam jet air ejector radiation monitor 3RT-7820 as per design. In addition, the radiation monitor 3RT-7820 alarmed and alerted SONGS operators of the steam generator tube leak as required. The inspectors concluded that SCE appropriately accounted for the unplanned release associated with the Unit 3 steam generator tube leak.

Form
Form
Form

11.0 Operational impacts from Unit 3 to Unit 2 (Charter Item 11)

a. Inspection Scope

As follow-on of the previous sections, the team reviewed collections of the Mitsubishi documents and presentations, licensee documents and presentations, and NRC independent analysis and assessments to consider the operational impact on Unit 2 based on analysis and data, including eddy current results, regarding the as-found condition of Unit 3. The team compared key observations and overall differences in operational parameters that are common to both units that could affect and possibly limit Unit 2 operation. The team focused on differences in fabrication, manufacturing, operation, and eddy current data results between Units 2 and 3 steam generators.

b. Observations and Findings

No findings were identified.

~~Based on the review of current Cycle 16 operating data and independent NRC analysis it does not appear that there were any major difference in the thermal hydraulic phenomena at normal full power operation.~~ Since generator physical dimensions and design are identical, the operational parameters are basically the same between the Unit 2 and 3 steam generators; therefore, the hydraulic forcing function that caused tube-to-tube wear and accelerated anti-vibration bar and tube support plate wear should also be same. The initial inspections of the Unit 2 steam generators did not indicate significant wear except at the retainer bars (different mechanism caused this wear). However, subsequent follow up inspections in Unit 2 with a more sensitive probe confirmed the existence of minor tube-to-tube wear in two neighboring tubes but in one of the steam generators. The tube-to-tube wear that was found in Unit 2 was in a similar location as that found in both of the Unit 3 steam generators.

The phenomenon of fluid-elastic instability is a function primarily of two criteria: the fluid velocity forces and the damping capability of the support structure (i.e., the tube support plates, the tubesheet, and the anti-vibration bars). Therefore, if it is determined that the thermal hydraulic forces in the bundle are the same, it can be concluded that the damping forces between the Unit 2 and Unit 3 replacement steam generators must be different. Mitsubishi performed several studies that indicated that gap contact forces in the anti-vibration bars were greater in Unit 2 than in Unit 3. However, with the exception of manufacturing data that shows slight differences, there is not currently a method available to measure the clearances between the anti-vibration bars and the tubes; however, SCE is currently working with AREVA to develop a method to take these measurements.

The tube damage found in Unit 3 is markedly more severe than Unit 2, especially considering that Unit 3 operated only about half the amount of time as Unit 2. This suggests that there is indeed a sizeable difference in the damping capability of the unit steam generators.

There are generally two options to arrest localized damaging thermal hydraulic phenomena in steam generators. The first and preferred option is to plug tubes in the

affected area. The collective plugging tends to relocate and reduce high fluid velocities and void fractions, and has on previous occasions in industry been successful. However, if plugging selected tubes does not provide significant margins adequate to arrest the damage mechanism, thermal hydraulic conditions can be reduced through a reduction in power. Reducing power has several beneficial effects including (1) tends to increase steam pressure, (2) reduces high steam fluid velocities and high void fraction in the bundle, and (3) improves damping. Currently, SCE is still reviewing and developing additional corrective actions to preclude fluid-elastic instability. ~~The NRC has been observing some of the mockup testing being used to qualify additional repair activities.~~

Form
Form

c. Conclusions

Based on the review of actual operating data and independent thermal-hydraulic modeling analyses, the team determined that there were no major differences in the thermal hydraulic phenomena at normal full power operation.

The NRC will review both physical and operational changes that SCE completes as part of the Confirmatory Action Letter inspections.

12.0 ~~Mitsubishi~~ Divider Plate Manufacturing and Weld Issues (Mitsubishi Charter Item 2)

a. Inspection Scope

On March 18, 2009, Mitsubishi identified cracking indications in the weld between the divider plate and the channel head of Unit 3 replacement steam generator 3E0-88 (see figure below), after completion of the ASME Section III hydrostatic test on the secondary side. The extent of condition investigation also identified similar cracking indications in Unit 3 replacement steam generator 3E0-89. As discussed in Section 4 of this report, the cause of the cracking was attributed to the air carbon-arc gouging process used to remove the clad weld from the channel head. The team reviewed information associated with the repair of the cracking indications to assess whether the repair activities resulted in relevant differences in design and fabrication that could be considered as contributing factors for the cause of the tube-to-tube wear issue in Unit 3.

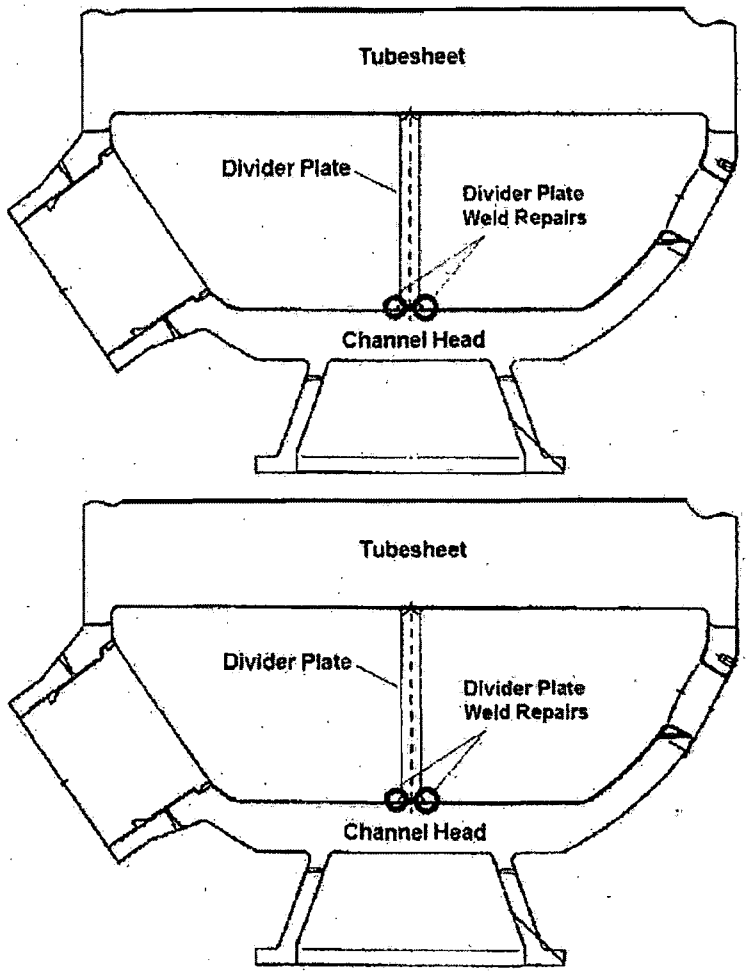


Location of Divider Plate Weld Repairs in Unit 3 Steam Generators (For Illustration Purposes Only)

Form

b. Observations and Findings

~~No findings were identified.~~

The team identified an unresolved item for which additional information is required to determine if a performance deficiency exists or if the issue constitutes violation of NRC requirements. The team also identified several observations related to the divider plate weld repairs in Unit 3 replacement steam generators.

1) Introduction: The team identified an Unresolved Item associated with the adequacy of evaluation and controls for the divider plate weld repairs.

Description: The cracking of the divider plate weld in both Unit 3 replacement steam generators required extensive repairs affecting the channel head, divider plate, and tubesheet. Based on interviews with licensee personnel and the review of documentation for the repairs, the team determined that Mitsubishi did not perform a comprehensive evaluation to assess the impact of the divider plate repairs on the integrity of the tube bundle. The team determined that the areas listed below were not considered or evaluated in sufficient depth to identify the potential adverse effects of the planned weld repairs.

- Additional Rotations – The repair activities for the Unit 3 steam generators required additional rotations of the steam generator assembly while these were oriented in the horizontal position. The repairs resulted in approximately 300 additional rotations in each steam generator, which could have affected the configuration of the tube bundle in terms of anti-vibration bar gaps or distortion. The team identified that Mitsubishi did not fully evaluate the impact of additional rotations on the configuration of the steam generators since rotation was considered a normal evolution in the fabrication process.

- Heat Input – The repair process included extensive heat-adding activities such as grinding, flame cutting, and post-weld heat treatment. While these activities were performed in accordance with the construction code of record and an approved repair plan, they could have resulted in thermal expansion and unintended distortion of steam generator components. For example, the channel heads were removed using flame cutting and Mitsubishi's evaluation for the impact of this activity was limited to the base material area in the vicinity of the cut, i.e. the heat affected zone. Mitsubishi did not fully assess the impact this activity could have on the overall configuration of the steam generator in terms of thermal expansion of the tubesheet or distortion.

- Dimensional Checks after Repair – The team identified that Mitsubishi did not perform dimensional verifications (e.g. clearances) of the tube bundle or other secondary side dimensions after the repairs of the Unit 3 steam generators to confirm that critical dimensions were not affected by the repairs.

Form

Additional review by the NRC is required following completion of the licensee's cause evaluation to fully assess how the repair activities affected the Unit 3 replacement

steam generators and then determine whether this issue represents a performance deficiency or constitutes a violation of NRC requirements. This issue is identified as URI 05000362/2012007-09, "Evaluation of the Effects of Divider Plate Weld Repairs in Unit 3 Replacement Steam Generators."

2) Repair Plan: The team noted that Mitsubishi developed a specific plan to conduct the repair of the divider plate weld in both Unit 3 replacement steam generators. The repair plan adequately described the major repair steps and the required implementing procedures. For some of the repair stages, the licensee developed new procedures to prescribe activities outside the normal fabrication sequence. The repair plan consisted of the following major steps:

   - Cutting off the divider plate from the tubesheet by grinding
   - Cutting off the channel head from the tubesheet by flame cutting
   - Cutting the divider plate from the channel head by grinding
   - Removal of the heat affected zone of the channel head bowl edge due to flame cutting
   - Application of weld buildup and post-weld heat treatment on the channel head bowl edge
   - Application of low alloy steel buildup and Alloy 690 butter on the bottom of the channel head for divider plate welding, including required post-weld heat treatment
   - Application of Alloy 690 buildup on the divider plate, including required post-weld heat treatment
   - Welding divider plate to channel head
   - Welding the divider plate to the tubesheet
   - Welding the channel head to the tubesheet
   - Primary side hydrostatic test

3) Differences between Replacement Steam Generators: The team identified the notable differences listed below between Unit 2 and Unit 3 replacement steam generators as a result of the divider plate weld repair activities.

   - Material Class for the Tubesheets – The tubesheet material for both Unit 3 replacement steam generators was reclassified to facilitate the additional post-weld heat treatment required for the repair of the divider plate welds. The tubesheet manufacturer originally certified that the tubesheet material met the requirements of ASME specification SA-508/Grade 3/Class 2, with a post-weld heat treatment time of approximately 15 hours. The repair activities in Unit 3 required additional post-weld heat treatment, which was expected to affect the properties of the tubesheet material to the extent that the mechanical properties would not meet the requirements for SA-508/Grade 3/Class 2 material. Mitsubishi performed mechanical testing on a specimen fabricated from the archive samples that was exposed to 30 hours of post-weld heat treatment and the tests showed that the tubesheet material's tensile strength did not meet the ASME specifications for SA-508/Grade 3/Class 2 material. Mitsubishi performed

a reconciliation review to reclassify the material to SA-508/Grade 3/Class 1, which has a lower tensile strength. The reconciliation included an evaluation of resulting stresses on the tubesheet under design, upset, emergency, faulted, and test conditions using the material properties for SA-508/Class 1 material. The evaluation resulted in acceptable stresses based on the stress limits imposed by the construction code of record. This issue was evaluated by Mitsubishi in the non-conformance report process and Supplier Deviation Request SDR-~~086 10041870~~-08610041870-09086 was submitted to the licensee for review and approval. The licensee approved the reclassification of the tubesheet material.

- Minimum Thickness of the Channel Head Base Metal – The channel heads of both Unit 3 steam generators were removed by flame cutting to facilitate the divider plate weld repairs. The removal and final welding of the channel head resulted in a reduction of the minimum wall thickness of the channel head base metal. The minimum base metal thickness was reduced by 1.18-inches. Mitsubishi evaluated this change in the "Design Report for the Channel Head Region." The reduction in minimum wall thickness was addressed through a reconciliation of stress ratios based on the stress limits imposed by the construction code of record. The analysis demonstrated the structural adequacy of the channel head, primary inlet nozzle, primary outlet nozzle, primary manway, support skirt, and the stud bolts of the primary manway.

- Number of Bolts in the Divider Plate Patch Plates – The original design of the replacement steam generators included a patch plate held in place at the upper corners of the divider plate by three bolts. As a result of the divider plate-to-tubesheet weld removal to support the repair activities, the Unit 3 divider plate patch plates were modified to be held by two bolts instead of the three bolts specified in the original design. Mitsubishi submitted this design change to the licensee for review and approval. Licensee personnel approved the design change as requested.

- Weld Buildup on Channel Head Surfaces – Since the repair of the divider plate welds in Unit 3 steam generators required cutting of the channel head, weld buildup had to be applied on the affected surfaces in order to restore the dimensions to design specifications. Mitsubishi submitted this design change to the licensee for review and approval. Licensee personnel approved the design change as requested.

- Post Weld Heat Treatment – The tubesheet-to-channel head weld area experienced a total of two post-weld heat treatments. Both Unit 3 replacement steam generators received an additional local post-weld heat treatment at approximately 1103° F for approximately 3.5 hrs. Mitsubishi submitted this fabrication process change to the licensee for review and approval. Licensee personnel approved the design change as requested.

- Total of Rotations during Fabrication – The total number of rotations on each steam generator varied as a result of the hydrostatic test results and the repairs on the divider plate welds.

| Steam Generator | Initial Rotations | Additional Rotations for Divider Plate Repairs | Total Rotations |
|---|---|---|---|
| Unit 2 E0-89 | 520 | 0 | 520 |
| Unit 2 E0-88 | 510 | 0 | 510 |
| Unit 3 E0-89 | 470 | 340 | 810 |
| Unit 3 E0-88 | 440 | 320 | 760 |

c. Conclusions

The team identified one unresolved item associated with the repair work done on the Unit 3 divider plate. The team did not identify any connection between the repairs of the divider plate and the unexpected tube-to-tube wear.

13.0 Office of Nuclear Reactor Regulation (NRR) Review of SONGS 50.59 Evaluation

a. Inspection Scope

The NRR technical specialist reviewed all of the design changes associated with the replacement steam generators to determine whether the changes to the facility or procedures, as described in the ~~Updated Final Safety Analysis Report~~updated final safety analysis report, had been reviewed and documented in accordance with 10 CFR 50.59 requirements. The technical specialist reviewed the various information used by SCE to review the changes being made to the replacement steam generators, including calculations, analyses, design change documentation, procedures, the ~~Updated Final Safety Analysis Report, the Technical Specifications~~updated final safety analysis report, the technical specifications, and plant drawings. The evaluation process used by the technical specialist included determining if the design changes to the replacement steam generators were a change to the facility or procedures as described in the ~~Updated Final Safety Analysis Report~~updated final safety analysis report or a test or experiment not described in the ~~Updated Final Safety Analysis Report~~updated final safety analysis report. The technical specialist also verified that safety issues related to the changes were resolved. The technical specialist compared the safety evaluations and supporting documents to the guidance and methods provided in ~~Nuclear Energy Institute (NEI)~~NEI 96-07, "Guidelines for 10 CFR 50.59 Implementation," Revision 1, as endorsed by NRC Regulatory Guide 1.187, "Guidance for Implementation of 10 CFR 50.59, Changes, Tests, and Experiments," to determine the adequacy of the 10 CFR 50.59 evaluations.

b. Observations and Findings

~~No findings were identified~~

The NRR technical specialist identified one unresolved item for which additional information is required to determine if performance deficiencies exist or if the issues constitute violations of NRC requirements.

(1) Introduction: The NRR technical specialist reviewed SCE's 10 CFR 50.59 evaluation contained in Engineering Change Packages 800071702 and 800071703 for the Unit 2 and Unit 3 replacement steam generators, respectively, in which SCE determined that the impact of the replacement steam generators on the current licensing basis and any need for NRC approval as required by 10 CFR 50.59.

(2) Description: The NRR technical specialist reviewed the SCE's 10 CFR 50.59 evaluation against 10 CFR 50.59(c)(2)(viii) which requires that licensees obtain a license amendment pursuant to 10 CFR 50.90 prior to implementing a proposed change if the change would result in a departure from a method of evaluation described in the ~~FSAR~~final safety analysis report (as updated) used in establishing the design bases or in the safety analyses. Industry guidance NEI 96-07, Revision 1, Section 3.10, "Methods of Evaluation," states, "Definition: Methods of evaluation means the calculational framework used for evaluating behavior or response of the facility or structures, systems, and components." Regulation 10 CFR 50.59 a(2), states, "*Departure from a method of evaluation described in the FSAR (as updated) used in establishing the design bases or in the safety analyses* means (i) changing any of the elements of the method described in the FSAR (as updated) unless the results of the analysis are conservative or essentially the same; or (ii) changing from a method described in the FSAR to another method unless that method has been approved by NRC for the intended application." Regulation 10 CFR 50.59(d)(1) requires that the licensee maintain records of changes in the facility that "includes a written evaluation which provides the bases for the determination that the change, test, or experiment does not require a license amendment~~....~~"...." The technical specialist evaluated SCE's bases for determining that the changes would not result in the departure from the method of evaluation used in establishing the design bases or in the safety analyses. Specifically, the technical specialist evaluated whether the changes involved:

(a) changing of any of the elements of the method described in the ~~Updated Final Safety Analysis Report~~updated final safety analysis report, which consistent with 10 CFR 50.59 a(2)(i) would be justified by demonstrating that the results of the analysis are conservative or essentially the same; or

(b) changing from a method described in the ~~Updated Final Safety Analysis Report~~updated final safety analysis report to another method, which consistent with 10 CFR 50.59 a(2)(ii) would be justified by demonstrating that method has been approved by NRC for the intended application.

The NRR technical specialist reviewed SCE's 10 CFR 50.59 evaluation and found two instances that failed to adequately address whether the change involved a departure of the method of evaluation described in the ~~Updated Final Safety Analysis Report.~~updated final safety analysis report.

(a) Use of ABAQUS instead of ANSYS: Updated Final Safety Analysis Report Sections 3.9.1.2.2.1.11 and 3.9.1.2.2.2.3 were revised to reflect that the SONGS Unit 2 and 3 original steam generators stress analyses for reactor coolant system structural integrity utilized the ANSYS computer program, whereas the replacement steam generators analyses utilized the ABAQUS computer program. The SCE's 50.59 evaluation incorrectly determined that using the ABAQUS instead of ANSYS was a change to an element of the method described in the ~~Updated Final Safety Analysis Report~~updated final safety analysis report did not constitute changing from a method described in the ~~Updated Final Safety Analysis Report~~updated final safety analysis report to another method, and as such, did not mention whether ABAQUS has been approved by the NRC for this application.

(b) Use of ANSYS instead of STRUDL and ANSYS: Updated Final Safety Analysis Report Section 5.4.2.3.1.3 was revised to reflect that the SONGS Unit 2 and 3 evaluation of tube stress under loss of coolant accident conditions for the original steam generators -consisted of a two-step process utilizing the STRUDL and ANSYS computer programs to calculate displacement histories and tube stresses, respectively, while the corresponding replacement steam generators analysis determined tube stresses from blowdown forces using only the ANSYS computer program. While SCE's 50.59 evaluation correctly considered this a change from a method described in the FSAR to another method, the 50.59 evaluation did not mention whether the method has been approved by NRC for this application.

This issue is identified as URI 05000362/2012007-10, "Evaluation of Departure of Method of Evaluation for 10 CFR 50.59 Processes."

c. Conclusions

The NRR technical specialist identified one unresolved item associated with a change in the method of evaluation as described in the updated final safety analysis report. Additional review and followup will be required to review the departure of the method of evaluation used during the stress analysis calculations associated with the replacement steam generators ~~and then determine whether this issue represents a performance deficiency or constitutes a violation of NRC requirements. This issue is identified as URI 05000362/2012007-10, "Evaluation of Departure of Method of Evaluation for 10 CFR 50.59 Processes."~~

14.0 Exit Meeting Summary

On June 18, 2012, the NRC held a public meeting and presented the inspection results to Mr. P. Dietrich, Senior Vice President and Chief Nuclear Officer, and other members of the staff, who acknowledged the findings. Proprietary information was provided to the team and all proprietary information was returned to SCE.

## SUPPLEMENTAL INFORMATION
## ~~——~~KEY POINTS OF CONTACT

Licensee Personnel

P. Dietrich, Senior Vice President and Chief Nuclear Officer
R. Litzinger, President, SCE
D. Bauder, Vice President and Station Manager
T. Palmisano, Vice President of Engineering, Projects and Site Support
T. McCool, Plant Manager
T. Yackle, Assistant Plant Manager
D. Yarbrough, Director ~~of~~, Operations
R. Corbett, Director ~~of~~, Performance Improvement
O. Flores, Director ~~of~~, Nuclear Oversight
R. St. Onge, Director ~~of~~, Nuclear Regulatory Affairs
B. Winn, Director ~~of~~, Nuclear Financial Management
E. Avella, Director ~~of~~, Project Management
M. Coveney, Director ~~of~~, Nuclear Leadership
M. Stevens, ~~Title needed~~Technical Specialist, Nuclear Regulatory Affairs
C. Cates, Manager, Nuclear Safety Culture and Site Recovery ~~Manager~~
M. Malzahn, Engineer, Project Management ~~Engineer~~
C. Harberts, Manager, Steam Generator Replacement Project ~~Manager~~
M. Mihalik, Senior Engineer, Project Management Organization
R. McWey, Manager, Nuclear Oversight ~~Manager~~
M. Pawlaczyk, Technical Specialist, Nuclear Regulatory Affairs ~~Technical Specialist~~
J. Peattie, Manager, Maintenance ~~Manager~~
R. Treadway, Manager, Nuclear Regulatory Affairs ~~Manager~~
B. Olech, Consulting Engineer, Edison
~~D~~J. Brabec, Project Manager, Steam Generator Recovery Program
D. Calhoun, Senior Engineer, Design Engineering Organization, Edison

Mitsubishi Personnel

H. Kaguchi, Mitsubishi Heavy Industries, Director, Component Designing Department
I. Otake, Mitsubishi Heavy Industries, Deputy Chief Engineer, Quality Assurance Department
T. Tsuruta, Mitsubishi Heavy Industries, Engineer, Quality Assurance Department
T. Inoue, Mitsubishi Heavy Industries, Deputy Director, Plant Designing Department
H. Hirano, Mitsubishi Heavy Industries, Project Manager, Overseas Project, Component Designing Department
R. Bywater, Mitsubishi Nuclear Energy Systems, COLA ~~Licensing~~Project Manager
F. Gillespie, Mitsubishi Nuclear Energy Systems, Senior Vice President
~~R. Godley,~~

R. Godley, Mitsubishi Nuclear Energy Systems, Deputy General Manager, Licensing Support

Other Contractor Personnel

R. Walker, MPR Consultant



Attachment 1