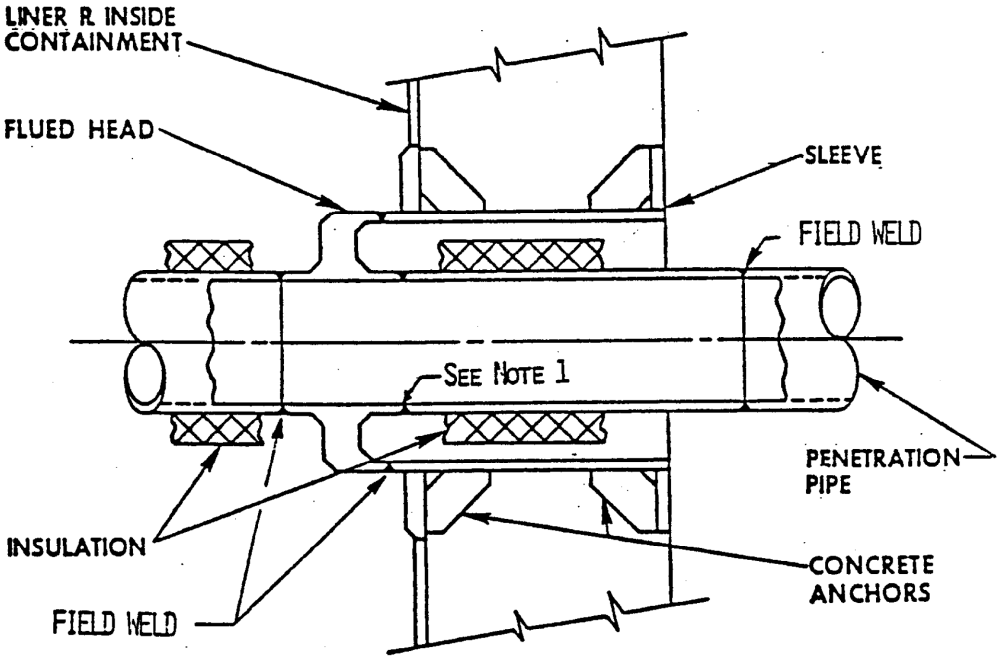

NOTE:
1. THIS WELD WILL NOT EXIST IN INTEGRAL FORGED PENETRATIONS

SOUTH TEXAS PROJECT
UNITS 1 & 2

SINGLE PIPE PENETRATION
FOR HIGH ENERGY LINES

Figure 3.6-3 Revision 0