North Anna 3

North Anna 3 COLA

NRC-Dominion Weekly Licensing Call

Follow-Up Questions to March 23-25, 2016 Fuel Audit

April 7, 2016

Dominion

NRC Agenda Items

1. NA3 Fuel mechanical and design limits using expected values for maximum horizontal and vertical acceleration in combination with hydrodynamic loads compared with Square Root Sum of Squares (SRSS) of the seismic only values from the RAI 04.02-1 response.
2. For the fuel assembly seismic response analysis, clarification of the methodology or methodologies used to calculate the maximum horizontal acceleration from the maximum X and Y directional accelerations calculated via the primary structural model. Specify if the fuel assembly seismic response analysis methodology reports a maximum from the X or Y direction values, or if the methodology then calculates a resultant acceleration from those values. Describe the justification for the method/s used.
3. For the fuel assembly seismic response analysis, please clarify the methodology or methodologies used and specifically describe which axial node is used in determining maximum horizontal accelerations.
4. Specify what accelerations the GE14E fuel has been qualified to, how it was qualified, and what the expected margins to the mechanical design limits are.

Dominion

Agenda Item 1

NA3 Fuel mechanical and design limits using expected values for maximum horizontal and vertical acceleration in combination with hydrodynamic loads compared with Square Root Sum of Squares (SRSS) of the seismic only values from the RAI 04.02-1 response.

Dominion Response:

- NA3's combined seismic and hydrodynamic loads are expected to be bounded by fuel mechanical design limits (Reference WG3-002N9544).
- Hydrodynamic loads are expected to be comparable to those of the operating fleet (Reference NEDC-33240P-A, Section 3.3.1.11).
- If the loads are combined using SRSS, the seismic loads (which are historically significantly higher than hydrodynamic loads) would dominate, and the combined loads would be bounded by the fuel mechanical design limits.

Agenda Item 2

For the fuel assembly seismic response analysis, clarification of the methodology or methodologies used to calculate the maximum horizontal acceleration from the maximum X and Y directional accelerations calculated via the primary structural model. Specify if the fuel assembly seismic response analysis methodology report a maximum from the X or Y direction values, or if the methodology then calculates a resultant acceleration from those values. Describe the justification for the method/s used.

Dominion Response:

- Used same methodology as that used for the DCD (see next slide). Selected maximum acceleration in X or Y direction from primary structural model (SER-DMN-019) and compared it to fuel mechanical design limit. The maximum accelerations are selected from all cases, time-steps, and fuel nodes.
- Justification: 10 CFR 52, Appendix E, Section VI

Agenda Item 2: NA3 Fuel and Control Rod Seismic Overview

DCD Fuel and Control Rod Seismic Overview

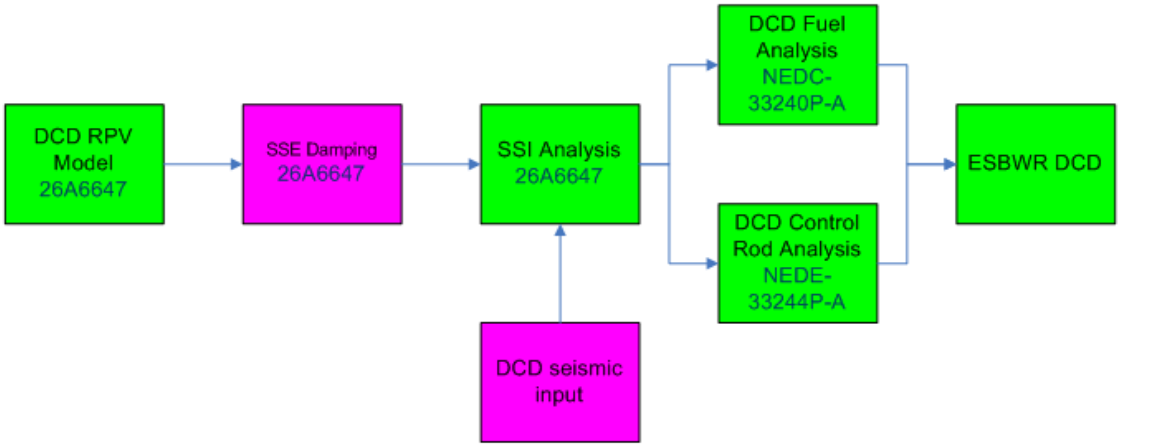

NA3 Fuel and Control Rod Seismic Overview

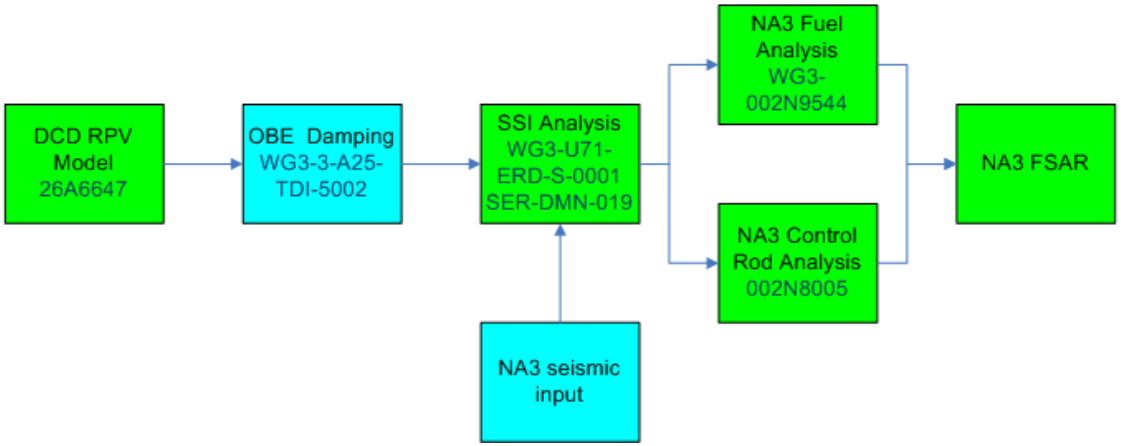

NA3 and DCD methodologies are the same

Agenda Item 3

For the fuel assembly seismic response analysis, please clarify the methodology or methodologies used and specifically describe which axial node is used in determining maximum horizontal accelerations.

Dominion Response:

- Used same methodology as that used for the DCD (see previous slides). Selected maximum acceleration in X or Y direction from primary structural model and compared it to fuel mechanical design limit.
- Used Node 854 (bottom of fuel node) to determine maximum horizontal acceleration (Reference SER-DMN-019, Table 4.2-5)

Dominion

Agenda Item 3: NA3 RPV models

DCD
26A6647
Figure 8.2-4
(partial)

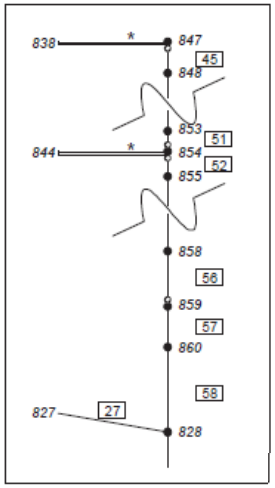

Detail A

NA3
WG3-U71-
ERD-S-0001
Figure 4.3-2
(partial)

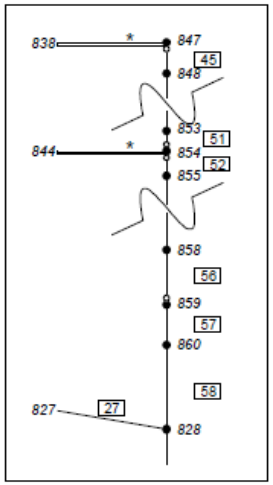

Detail A

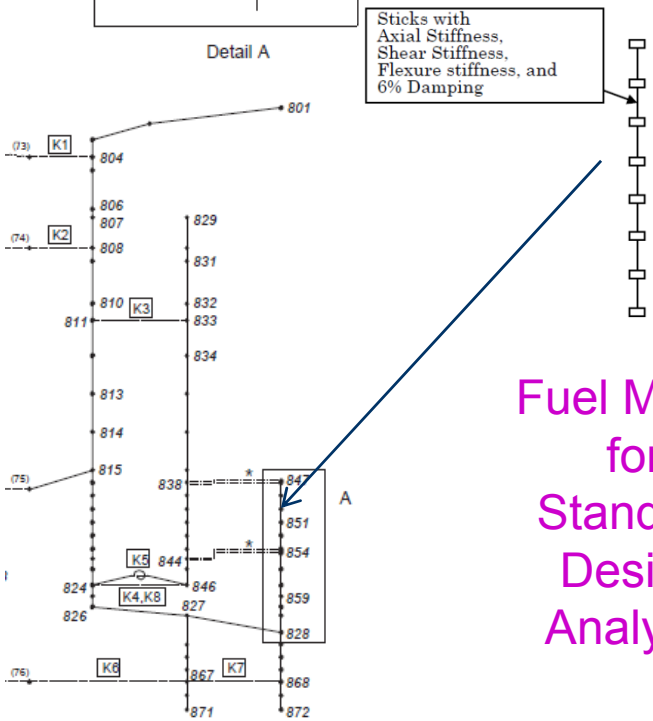

Fuel Model
for
Standard
Design
Analysis

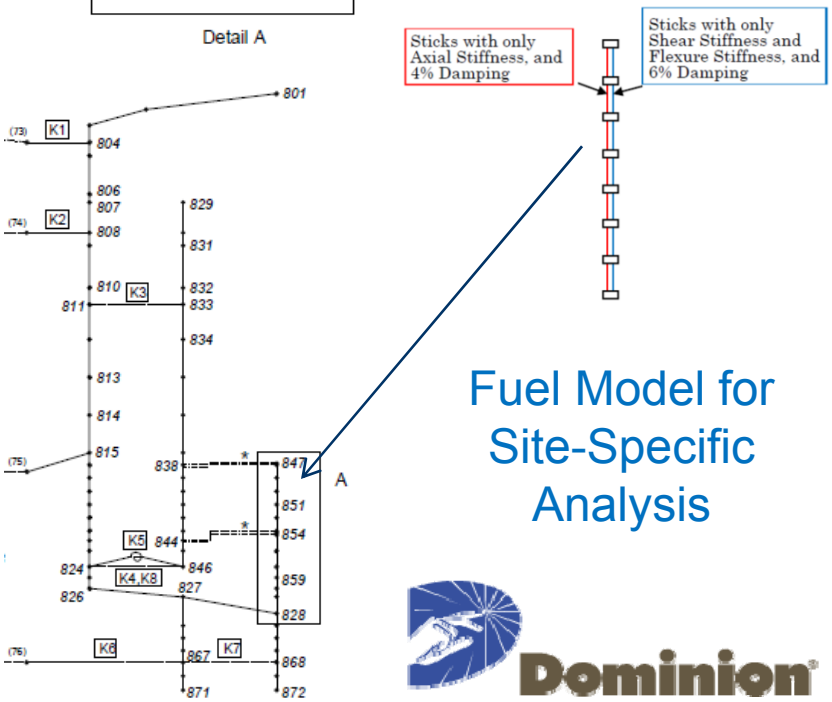

Fuel Model for
Site-Specific
Analysis

Agenda Item 4

Specify what accelerations the GE14E fuel has been qualified to, how it was qualified, and what the expected margins to the mechanical design limits are.

Dominion Response:

- GE14E fuel is qualified to accelerations specified in NEDC-33240-P-A, Section 3.4.1.11 (MFN 06-297 Supplement 9 (April 19, 2010) (ML101110138) and NRC FSER for NEDE-33240P, Section 3.1.2 (acceleration values are proprietary information)
- GE14E fuel was qualified using GE14 fuel as a basis (Reference NEDC-33240-P-A, Section 3.4.1.11 (MFN 06-297 Supplement 9 (April 19, 2010) (ML101110138) and DCD RAI response 4.8-8)
- The primary stresses in the fuel are less than 70% of the material ultimate strength (Reference DCD RAI response 4.8-8 (MFN 06-297 Supplement 9 (April 19, 2010) (ML101110138) and WG3-002N9544, Section 3.0)

Dominion