July 25, 2016

Dr. Donald Wall, Director
Nuclear Radiation Center
50 Roundtop Drive
Washington State University
Pullman, WA 99164-1300

SUBJECT: EXAMINATION REPORT, NO. 50-027/OL-16-01, WASHINGTON STATE UNIVERSITY

Dear Dr. Wall:

During the week of June 13, 2016, the U.S. Nuclear Regulatory Commission (NRC) administered an operator licensing examination at your Washington State University reactor. The examination was conducted according to NUREG-1478, "Operator Licensing Examiner Standards for Research and Test Reactors," Revision 2, published in June 2007. Examination questions and preliminary findings were discussed at the conclusion of the examination with Mr. C. Corey Hines, Assistant Director.

In accordance with Section 2.390 of Title 10 of the *Code of Federal Regulations*, a copy of this letter and the enclosures will be available electronically for public inspection in the NRC Public Document Room or from the Publicly Available Records component of NRC's Agencywide Documents Access and Management System (ADAMS). ADAMS is accessible from the NRC Web site at http://www.nrc.gov/reading-rm/adams.html (the Public Electronic Reading Room). The NRC is forwarding the individual grades to you in a separate letter which will not be released publicly. If you have any questions concerning the examination, please contact Phillip T. Young at 301-415-4094 or via email at phillip.young@nrc.gov.

Sincerely,

/RA/

Anthony J. Mendiola, Chief
Research and Test Reactors Oversight Branch
Division of Policy and Rulemaking
Office of Nuclear Reactor Regulation

Docket No. 50-027

Enclosures:
1. Examination Report NO. 50-027/OL-16-01
2. Facility comments with resolution
3. Written examination with facility comments incorporated

cc: C. Corey Hines, Assistant Director

cc: w/o enclosures: See next page

Dr. Donald Wall, Director
Nuclear Radiation Center
50 Roundtop Drive
Washington State University
Pullman, WA 99164-1300

July 25, 2016

SUBJECT: EXAMINATION REPORT, NO. 50-027/OL-16-01, WASHINGTON STATE UNIVERSITY

Dear Dr. Wall:

During the week of June 13, 2016, the U.S. Nuclear Regulatory Commission (NRC) administered an operator licensing examination at your Washington State University reactor. The examination was conducted according to NUREG-1478, "Operator Licensing Examiner Standards for Research and Test Reactors," Revision 2, published in June 2007. Examination questions and preliminary findings were discussed at the conclusion of the examination with Mr. C. Corey Hines, Assistant Director.

In accordance with Section 2.390 of Title 10 of the *Code of Federal Regulations*, a copy of this letter and the enclosures will be available electronically for public inspection in the NRC Public Document Room or from the Publicly Available Records component of NRC's Agencywide Documents Access and Management System (ADAMS). ADAMS is accessible from the NRC Web site at http://www.nrc.gov/reading-rm/adams.html (the Public Electronic Reading Room). The NRC is forwarding the individual grades to you in a separate letter which will not be released publicly. If you have any questions concerning the examination, please contact Phillip T. Young at 301-415-4094 or via email at phillip.young@nrc.gov.

Sincerely,
/RA/
Anthony J. Mendiola, Chief
Research and Test Reactors Oversight Branch
Division of Policy and Rulemaking
Office of Nuclear Reactor Regulation

Docket No. 50-027
Enclosures: 1. Examination Report NO. 50-027/OL-16-01
2. Written Examination
cc: C. Corey Hines, Assistant Director, Reactor Operations, Washington State University
cc: w/o enclosures: See next page
DISTRIBUTION w/ encls.:
PUBLIC AMendiola MMorlang AAdams XYin

ADAMS Accession No. : ML16205A011 Package: ML16068A003

OFFICE	NRR/DPR/PROB/CE	NRR/DPR/PROB/OLA	NRR/DPR/PROB/BC
NAME	PYoung/pty	CRevelle	AMendiola
DATE	0722/2016	07/21/2016	07/25/2016

OFFICIAL AGENCY RECORD

cc:

Director
Division of Radiation Protection
Department of Health
7171 Cleanwater Lane, Bldg #5
P.O. Box 47827
Olympia, WA 98504-7827

Mr. David Clark, Director
Washington State University
Radiation Safety Office
P.O. Box 641302
Pullman, WA 99164-1302

Dr. Ken Nash Chair
Washington State University
Reactor Safeguards Committee
Nuclear Radiation Center
P.O. Box 641300
Pullman, WA 99164-1300

Test, Research and Training
Reactor Newsletter
P.O. Box 118300
University of Florida
Gainesville, FL 32611-8300

EXAMINATION REPORT NO: 50-027/OL-16-01

FACILITY: Washington State University

FACILITY DOCKET NO.: 50-027

FACILITY LICENSE NO.: R-76

SUBMITTED BY: **/RA/** 7/20/16
Phillip T. Young, Chief Examine Date

SUMMARY:

During the week of June 13, 2016, the NRC administered operator licensing examinations to three Reactor Operator candidates. All candidates passed the examinations and will be issued a license to operate the Washington State University reactor.

REPORT DETAILS

1. Examiner: Phillip T. Young, Chief Examiner

2. Results:

	RO PASS/FAIL	SRO PASS/FAIL	TOTAL PASS/FAIL
Written	3/0	0/0	3/0
Operating Tests	3/0	0/0	3/0
Overall	3/0	0/0	3/0

3. Exit Meeting:

   C. Corey Hines, Assistant Director, Reactor Operations, Washington State University
   Phillip T. Young, NRC, Examiner

   The NRC Examiner thanked the facility for their support in the administration of the examinations and noted how well the candidates were prepared. Mr. Young thanked the facility for their comments on the written examination.

ENCLOSURE 1

FACILITY COMMENTS WITH NRC RESOLUTION

Question: A.010
With the reactor critical at 10 KW a rod is pulled to insert a positive reactivity of $0.18. Which one of the following will be the stable reactor period as a result of this reactivity insertion?
a. 10 seconds
b. 45 seconds
c. 55 seconds
d. 65 seconds
Answer: A.10 b.
Reference: Reactivity added = $0.18 x .007 = 0.00126

$$\tau = (\beta-\rho)/\lambda_{eff}\rho = \frac{.007 - .00126}{(.1)\ (.00126)} = 45.6 \text{ seconds}$$

Facility comments: The answer uses the wrong value of Beff.

Recommendation: Consider changing the answer key and question bank.

Justification: Conversion SAR 2002, page 39, Beff = 0.0075 (not 0.007 as used in the calculation.)

NRC Resolution: The facility comment is accepted and the question will be modified as shown in the attached exam.

Question: A.012
The term "Prompt Critical" refers to:
a. the instantaneous jump in power due to a rod withdrawal
b. a reactor which is supercritical using only prompt neutrons
c. a reactor which is critical using both prompt and delayed neutrons
d. a reactivity insertion which is less than Beta-effective
Answer: A.12. b. Reference: Standard NRC Question

Facility comments: The answer key shows b, the correct answer is NO CORRECT ANSWER.

Recommendation: Consider changing the answer key and question bank.

Reference: Reed Manual Rev. 9/2002 Section 9.8: “When a reactor is critical on prompt neutrons alone it is prompt critical.”

NRC Resolution: The staff has reviewed the question and the comment and believes the question is acceptable as written. See Burns 4.2 example 4.2(a) page 4-4 and section 1.2.3 page 1 - 6

Question: B.011
WSUNRC keeps ___ emergency kits available.
a. Three
b. Two
c. One
d. Zero
Answer: B.11 d.
Reference: Emergency Plan

Facility comments: The answer key show d. as correct and is should be answer b.

Recommendation: The answer key should be changed. There are two emergency kits as stated in the Emergency Plan Rev. 5/21/2015, reference provided below.

Reference: WSUNRC Emergency Plan Rev. 5/21/2015, page 33, section 8.2.

NRC Resolution: The facility comment is accepted the answer key will show b. as the correct

answer.

U. S. NUCLEAR REGULATORY COMMISSION
NON-POWER INITIAL REACTOR LICENSE EXAMINATION

FACILITY: Washington State University

REACTOR TYPE: Pool Type, Modified TRIGA

DATE ADMINISTERED: 6/14/2016

CANDIDATE: _____

INSTRUCTIONS TO CANDIDATE:
Answers are to be written on the answer sheet provided. Attach the answer sheets to the examination. Points for each question are indicated in brackets for each question. A 70% in each section is required to pass the examination. Examinations will be picked up three (3) hours after the examination starts.

Category Value	% of Total	% of Candidate s Score	Category Value	Category
20.00	33.3			A. Reactor Theory, Thermodynamics and Facility Operating Characteristics
20.00	33.3			B. Normal and Emergency Operating Procedures and Radiological Controls
20.00	33.3			C. Facility and Radiation Monitoring Systems
60.00	100.0			TOTALS

All work done on this examination is my own. I have neither given nor received aid.

_____
Candidate's Signature

ENCLOSURE 3

NRC RULES AND GUIDELINES FOR LICENSE EXAMINATIONS

During the administration of this examination the following rules apply:

1. Cheating on the examination means an automatic denial of your application and could result in more severe penalties.

2. After the examination has been completed, you must sign the statement on the cover sheet indicating that the work is your own and you have neither received nor given assistance in completing the examination. This must be done after you complete the examination.

3. Restroom trips are to be limited and only one candidate at a time may leave. You must avoid all contacts with anyone outside the examination room to avoid even the appearance or possibility of cheating.

4. Use black ink or dark pencil <u>only</u> to facilitate legible reproductions.

5. Print your name in the blank provided in the upper right-hand corner of the examination cover sheet and each answer sheet.

6. Mark your answers on the answer sheet provided. USE ONLY THE PAPER PROVIDED AND DO NOT WRITE ON THE BACK SIDE OF THE PAGE.

7. The point value for each question is indicated in [brackets] after the question.

8. If the intent of a question is unclear, ask questions of the examiner only.

9. When turning in your examination, assemble the completed examination with examination questions, examination aids and answer sheets. In addition turn in all scrap paper.

10. Ensure all information you wish to have evaluated as part of your answer is on your answer sheet. Scrap paper will be disposed of immediately following the examination.

11. To pass the examination you must achieve a grade of 70 percent or greater in each category.

12. There is a time limit of three (3) hours for completion of the examination.

13. When you have completed and turned in you examination, leave the examination area. If you are observed in this area while the examination is still in progress, your license may be denied or revoked.

EQUATION SHEET

$$\dot{Q} = \dot{m} c_p \Delta T = \dot{m} \Delta H = UA\,\Delta T$$

$$\lambda_{eff} = 0.1 \text{ seconds}^{-1}$$

$$SUR = 26.06\left[\frac{\lambda_{eff}\,\rho}{\beta - \rho}\right]$$

$$SCR = \frac{S}{1 - K_{eff}} \approx \frac{S}{1 - K_{eff}}$$

$$CR_1(1 - K_{eff_1}) = CR_2(1 - K_{eff_2})$$

$$M = \frac{1 - \rho}{1 - K_{eff}}$$

$$CR_1(1 - \rho_1) = CR_2(1 - \rho_2)$$

$$M = \frac{1}{1 - K_{eff}} = \frac{CR_1}{CR_2}$$

$$P = P_0\, 10^{SUR(t)}$$

$$P = P_0\, e^{\frac{t}{T}}$$

$$P = \frac{\beta(1 - \rho)}{\beta - \rho} P_0$$

$$SDM = \frac{(1 - K_{eff})}{K_{eff}}$$

$$T = \frac{\lambda^*}{\rho - \beta}$$

$$T = \frac{\lambda^*}{\rho}\left[\frac{\beta - \rho}{\beta - \rho}\right]$$

$$\Delta\rho = \frac{K_{eff_2} - K_{eff_1}}{K_{eff_1} \times K_{eff_2}}$$

$$T_{\%} = \frac{0.693}{\lambda(n)}$$

$$\rho = \frac{(K_{eff} - 1)}{K_{eff}}$$

$$DR = DR_0\, e^{-\lambda t}$$

DR – Rem, Ci – curies, E – Mev, R – feet

$$DR = \frac{6CiE\lambda(n)}{R^2}$$

$$DR_1 d_1^2 = DR_2 d_2^2$$

$$\frac{(\rho_2 - \beta)^2}{Peak_2} = \frac{(\rho_1 - \beta)^2}{Peak_1}$$

1 Curie = 3.7×10^{10} dis/sec

1 Horsepower = 2.54×10^3 BTU/hr

1 BTU = 778 ft-lbf

1 gal (H_2O) . 8 lbm

c_P = 1.0 BTU/hr/lbm/ºF

1 kg = 2.21 lbm

1 Mw = 3.41×10^6 BTU/hr

ºF = 9/5 EC + 32

ºC = 5/9 (EF - 32)

c_p = 1 cal/sec/gm/ºC

Question A.001 [1.0 point] {1.0]

Which factor of the Six Factor formula is most easily varied by the reactor operator?

a. Thermal Utilization Factor (f)

b. Reproduction Factor (η)

c. Fast Fission Factor (ε)

d. Fast Non-Leakage Factor ($_f$)

Answer: A.01 a.

Reference: NEEP 234, p. 89.

Question A.002 [1.0 point] {2.0]

Given the data in the table to the right, which ONE of the following is the closest to the half-life of the material?

TIME	ACTIVITY
0 minutes	2400 cps
10 minutes	1757 cps
20 minutes	1286 cps
30 minutes	941 cps
60 minutes	369 cps

a. 11 minutes

b. 22 minutes

c. 44 minutes

d. 51 minutes

Answer: A.02 b.

Reference: Reactor Training Manual - *Reactivity*

Question A.003 [1.0 point] {3.0]

Which ONE of the following is an example of neutron decay?

a. $_{35}Br^{87} \equiv {}_{33}As^{83}$

b. $_{35}Br^{87} \equiv {}_{35}Br^{86}$

c. $_{35}Br^{87} \equiv {}_{34}Se^{86}$

d. $_{35}Br^{87} \equiv {}_{36}Kr^{87}$

Answer: A.03 b.

Reference: NEEP 234, p.

Question A.004 [1.0 point] {4.0]

A reactor operator understands that:

a. The more neutrons multiply during startup the lower the shim blades are at critical.

b. Neutron multiplication during startup is just neutrons getting lost at a slower rate.

c. There is no fixed relationship between neutron level and criticality.

d. Without the Sb-Be source the reactor would not go critical.

Answer: A.04 c

Reference: Glasstone, 1958, Chapter 14

Question A.005 [1.0 point] {5.0]

The count rate is 50 cps. An experimenter inserts an experiment into the core, and the count rate decreases to 25 cps. Given the initial K_{eff} of the reactor was 0.8, what is the worth of the experiment?

a. $\Delta\rho = - 0.42$

b. $\Delta\rho = + 0.42$

c. $\Delta\rho = - 0.21$

d. $\Delta\rho = + 0.21$

Answer: A.05 a.

Reference: $CR_1 / CR_2 = (1 - Keff_2) / (1 - Keff_1) \rightarrow 50 / 25 = (1 - Keff_2) / (1 - 0.8)$

Therefore $Keff_2 = 0.6$ $\Delta\rho = Keff_2 - Keff_1 / Keff_2 \cdot Keff_1 = (0.6 - 0.8)/(0.6 \cdot 0.8) = - 0.41667$

Question A.006 [1.0 point] {6.0]

The following graph for U-235 depicts……

a. neutron energy distribution in the moderator

b. axial flux distribution in the core

c. radial flux distribution in the core

d. fission product yield distribution

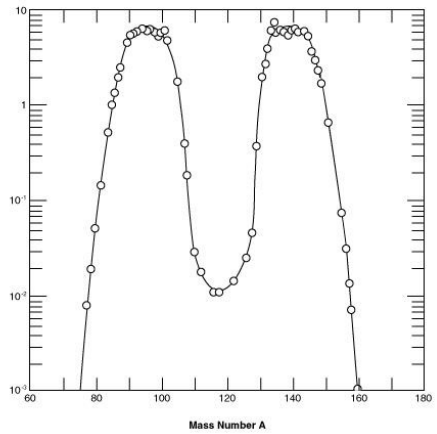

Answer: A.06 d.

Reference: DOE Manual Vol. 1, pg. 57

Question A.007 [1.0 point] {7.0]

K_{eff} for the reactor is 0.98. If you place an experiment worth **+$1.00** into the core, what will the new K_{eff} be?

a. 0.982

b. 0.987

c. 1.013

d. 1.018

Answer: A.07 b.

Reference: SDM = $(1-k_{eff})/k_{eff}$ = (1-0.98)/0.98 = 0.02/0.99 = 0.02041 or 0.02041/.0075 = $2.72, or a reactivity worth (ρ) of -$2.72.

Adding +$1.00 reactivity will result in a SDM of $2.72 - $1.00 = $1.72, or .0129081 ΔK/K

K_{eff} = 1/(1+SDM) = 1/(1 + 0.0129081) = 0.987

Question A.008 [1.0 point] {8.0]

Which ONE of the following statements describes the difference between Differential (DRW) and Integral (IRW) rod worth curves?

a. DRW relates the worth of the rod per increment of movement to rod position. IRW relates the total reactivity added by the rod to the rod position.

b. DRW relates the time rate of reactivity change to rod position. IRW relates the total reactivity in the core to the time rate of reactivity change.

c. IRW relates the worth of the rod per increment of movement to rod position. DRW relates the total reactivity added by the rod to the rod position.

d. IRW is the slope of the DRW at a given rod position.

Answer: A.08 a.
Reference: Standard NRC Question

Question A.009 [1.0 point] {9.0]

Given: Primary coolant flow rate is 500 gallons/minute and secondary flow rate is 700 gallons/minute. The ΔT across the primary side of the heat exchanger is 13°F and secondary inlet temperature to the heat exchanger is 73°F. Assuming both the primary and secondary coolants have the same Cp value, which ONE of the following is the secondary outlet temperature?

a. 82° F

b. 85° F

c. 89° F

d. 91° F

Answer: A.09 a.
Reference: $\Delta T_{sec} = (Flow_{pri}/Flow_{sec}) \times \Delta T_{pri}$
$\Delta T_{sec} = (500/700) \times 13°\ F = 9.28°\ F$ Secondary outlet = 73° F + 9.28° F = 82.3° F

Question A.010 [1.0 point] {10.0} Changed per facility comment

With the reactor critical at 10 KW a rod is pulled to insert a positive reactivity of $0.18. Which one of the following will be the stable reactor period as a result of this reactivity insertion?

a. ~~10 seconds~~ 45 seconds

b. 50 seconds

c. 55 seconds

d. 65 seconds

Answer: A.10 b.

Reference:

Reactivity added = $0.18 x .0075 = 0.00126

$\tau = (\beta-\rho)/\lambda_{eff}\rho = \frac{.0075 - .00126}{(.1)(.00126)} = 49.5$ seconds

Question A.011 [1.0 point] {11.0}

Which ONE of the following is a correct statement of why delayed neutrons enhance the ability to control reactor power?

a. Delayed neutrons are born at higher energy levels than prompt neutrons.

b. There are more delayed neutrons than prompt neutrons.

c. Delayed neutrons increase the average neutron lifetime.

d. Delayed neutrons readily fission in U-238.

Answer: A.11 c.

Reference: DOE Manual, Section 3

Question A.012 [1.0 point] {12.0}

The term "Prompt Critical" refers to:

a. the instantaneous jump in power due to a rod withdrawal

b. a reactor which is supercritical using only prompt neutrons

c. a reactor which is critical using both prompt and delayed neutrons

d. a reactivity insertion which is less than Beta-effective

Answer: A.12. b.

Reference: Standard NRC Question

Question A.013 [1.0 point] {13.0]

Which ONE of the following describes the difference between reflectors and moderators?

a. Reflectors decrease core leakage while moderators thermalize neutrons

b. Reflectors shield against neutrons while moderators decrease core leakage

c. Reflectors decrease thermal leakage while moderators decrease fast leakage

d. Reflectors thermalize neutrons while moderators decrease core leakage

Answer: A.13 a.

Reference: Introduction to Nuclear Reactor Operations, Reed Robert Brown, Section 5.4

Question A.014 [1.0 point] {14.0]

Complete the following sentence.

A dollar ($) is a unit of reactivity, where one dollar ($1) is equal to the _.

a. Delayed neutron precursor decay constant (λ).

b. Effective delayed neutron precursor decay constant (λ_{eff}).

c. Delayed neutron fraction (β).

d. Effective delayed neutron fraction (β_{eff}).

Answer: A.14 d.

Reference: Reactor Theory (Neutron Characteristics)
DOE-HDBK-1019/1-93 PROMPT AND DELAYED NEUTRONS

Question A.015 [1.0 point] {15.0]

An initial count rate of 100 is doubled five times during a startup. Assuming an initial Keff of 0.950, which one of the following is the new Keff?

a. 0.957

b. 0.979

c. 0.985

d. 0.998

Answer: A.15 d.

Reference:

CR1 (1-Keff1) = CR2 (1 - Keff2) or M1 (1-Keff1) = M2 (1 - Keff2)

CR2/CR1 = 32 ÷CR1 (1-Keff1)/CR2 = 1 - Keff2) ÷ 100 (1-0.950)/3200 = 1 - Keff2

Keff2 = 1 - .0015625 = .998

Question A.016 [1.0 point] {16.0]

The associated graph depicts a plot of reactor period as a function of time. What best describes the behavior of **REACTOR POWER** between points A and B:

a. Constant

b. Decreasing then increasing

c. Continually increasing

d. Continually decreasing

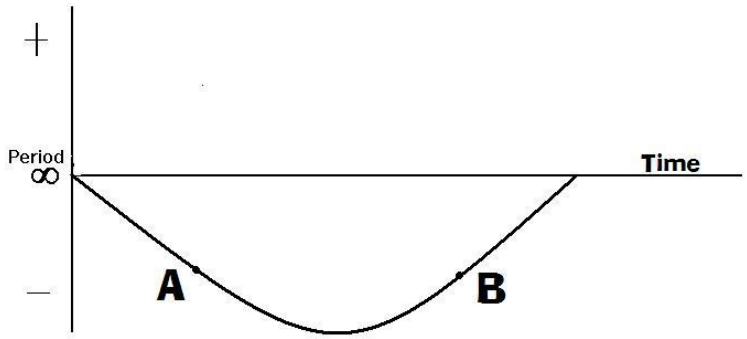

Answer: A.16 d.

Reference: DOE Manual Vol. 1, Section 2

From point A to B, reactor period is negative, power will continue to decrease.

Question A.017 [1.0 point] {17.0]

Isotopes are nuclides that have the same atomic number and are therefore the same element, but differ in number of ___.

a. protons

b. electrons

c. neutrons

d. positrons

Answer: A.17 c.

Reference: DOE Fundamentals Handbook
DOE-HDBK-1019/1-93 *Nuclear Physics and Reactor Theory Vol. 1*

Question A.018 [1.0 point] {18.0}

A nuclear reactor startup is in progress. Control rod withdrawal was stopped several minutes ago to assess criticality. Which one of the following is the correct set of indications which supports a declaration that the reactor has achieved criticality?

a. Period is stable at ∞; source range count rate is stable.

b. Period is stable at 60 sec; source range count rate is stable.

c. Period is stable at ∞; source range count rate is slowly increasing.

d. Period is stable at 60 sec; source range count rate is slowly increasing.

Answer: A.18 d.

Reference: *NRC Generic Fundamentals Examination Question Bank—PWR2010,* Question ID #P1766,

Question A.019 [1.0 point] {19.0}

Xenon-135 (Xe^{135}) is produced in the reactor by two methods. One is directly from fission; the other is indirectly from the decay of :

a. Xe^{136}

b. Sm^{136}

c. Cs^{135}

d. I^{135}

Answer: A.19 d.

Reference: Burn, R., Introduction to Nuclear Reactor Operations, © 1988, §§ 8.1 —8.4, pp. 8-3 — 8-14.

Question A.020 [1.0 point] {20.0]

Which ONE of the following physical characteristics of the TRIGA fuel is the MAIN contributor for the prompt negative temperature coefficient?

a. As the fuel heats up, a rapid increase in moderator temperature occurs through conduction and convection heat transfer mechanisms which adds negative reactivity

b. As the fuel heats up, the oscillating hydrogen in the Zr-H lattice imparts energy to a thermal neutron, thereby increasing its mean free path and probability of escape

c. As the fuel heats up, the resonance absorption peaks broaden and increases the likelihood of absorption in U-238 and/or Pu-240

d. As the fuel heats up, fission product poisons (e.g., Xe) increase in concentration within the fuel matrix and add negative reactivity via neutron absorption

Answer: A.20 b.
Reference: TRIGA Fuel Design

END OF SECTION A

Question B.001 [1.0 point] {1.0}
The term, ALARA, means:

a. As Low As Reasonably Attainable
b. As Little As Reasonably Attainable
c. A Low Ambient Radiation Area
d. As Low As Reasonably Achievable

Answer: B.01 d.
Reference: 10 CFR20

Question B.002 [1.0 point] {2.0}
Per the WSU Technical Specifications, the MINIMUM exhaust flow rate of the ventilation system in the normal mode, from the reactor pool room, shall be _____.

a. 3000 cubic foot per minute (cfm)
b. 4000 cubic foot per minute (cfm)
c. 3000 cubic meter per minute (cmm)
d. 4000 cubic meter per minute (cmm)

Answer: B.02 b.
Reference: TS 3.4

Question B.003 [1.0 point, 0.25 each] {3.0}
Match each of the Technical Specification Limits in column A with its corresponding value in column B. (Each limit has only one answer, values in Column B can be used once, more than once or not at all.)

Column A	Column B (limit shall not exceed)
a. A secured experiment	1. $0.50
b. A movable experiment	2. $1.00
c. The sum of the absolute values of all individual experiments	3. $2.00
	4. $5.00
d. Maximum excess reactivity	5. $6.56
	6. $7.46

Answer: B.03 a. = 3; b. = 2; c. = 4; d. = 6
Reference: TS 3.1 and 3.6

Question B.004 [1.0 point] {4.0}
The ventilation system shall automatically switch to dilute mode upon a high activity alarm from the _____.

a. Reactor bridge radiation monitor
b. Beam room radiation monitor
c. Continuous air monitor
d. Exhaust gas monitor

Answer: B.04 c.
Reference: TS 3.4 (3), pg. 22

Question B.005 [1.0 point] {5.0}
Which of the following would be considered the most correct method for environmental monitoring at the WSU NRC which satisfies the requirements of 10 CFR 20?

a. Continuous air monitoring for N-16 in the Exhaust Gas Monitoring System.

b. Processing highly sensitive thermoluminescent dosimeters (TLDs) placed in unrestricted areas adjacent to the facility.

c. Surveillance monitoring of personnel operating around exposure beam ports.

d. Performing periodic pool water samples with a high purity germanium (HPGe) detector,

Answer: B.05 b.
Reference: SOP No. 17, Standard Procedure for Environmental Monitoring

Question B.006 [1.0 point] {6.0}
Which ONE of the following modifications would be considered a “50.59” in which the WSU must file a request to NRC for change? The facility plans to:

a. Replace an identical NLW-1000
b. Measure a xenon poisoning characteristics with new method
c. Replace a fission chamber with an un-compensated ion chamber in the Wide Rang Log Channel

d. Perform a reactor power calibration with the new resistance temperature detector (RTD) probe

Answer: B.06 c.
Reference: Administrative Procedure # 3 Approval and Review of Facility Modifications and Special Tests or Experiments (10 CFR 50.59 changes)

Question B.007 [1.0 point] {7.0}
In accordance with 10 CFR 20, the "Annual Limit on Intake (ALI)" refers to:

a. The concentration of a given radionuclide in air which, if breathed for a working year of 2000 hours, would result in a committed effective dose equivalent of 5 rems.

b. The dose equivalent to organs that will be received from an intake of radioactive material by an individual during the 50-year period following the intake.

c. The amount of radioactive material taken into the body by inhalation or ingestion in one year which would result in a committed effective dose equivalent of 5 rems.

d. Limits on the release of effluents to an unrestricted environment.

Answer: B.07 c.
Reference: 10CFR20.1003

Question B.008 [1.0 point] {8.0}
The staff has just completed maintenance on a potentially contaminated system. You need to perform a survey to determine if there is any loose contamination in the vicinity that needs removal. Which of the following types of detectors would you most likely use in this instance?

a. Rem Ball
b. Scintillation Detector
c. Geiger Mueller (GM) Detector
d. Ion Chamber

Answer: B.08 c.
Reference: DOE Fundamentals Handbook *Nuclear Physics and Reactor Theory Vol. 2*

Question B.009 [1.0 point] {9.0}
_____ are thresholds for establishing emergency classes and initiating appropriate emergency measures.

a. Emergency Action Levels

b. Emergency Planning Zones

c. Emergency Procedures

d. Protection Action Guides

Answer: B.09 a.
Reference: Emergency Plan Definitions, 2.2 - Emergency Action Levels

Question B.010 [1.0 point] {10.0}
The Emergency Director is responsible for all of the following **EXCEPT**:

a. Alerting the dispatcher of the condition.

b. Ensuring the reactor is placed in a safe shutdown condition.

c. Terminating or minimizing releases of radioactive materials.

d. Protecting the health and safety of facility personnel and visitors.

Answer: B.10 a.
Reference: Emergency Plan

Question B.011 [1.0 point] {11.0}
WSUNRC keeps ___ emergency kits available.

a. Three

b. Two

c. One

d. Zero

Answer: B.11 ~~d.~~ b. per facility comment
Reference: Emergency Plan

Question B.012 [1.0 point] {12.0}
The duties and responsibilities of a Reactor Operator shall include all of the following EXCEPT:

a. operating the reactor console

b. keeping records of all important events

c. performing all required maintenance and repair work on the reactor

d. shutting down the reactor immediately if any abnormal condition develops

Answer: B.12 c.
Reference: Administrative Procedures

Question B.013 [1.0 point] {13.0}
Per SOP-2, the cooling system pumps and tower fan are ON if:

a. reactor console power key and switch are in the “ON” position.

b. fuel temperature begins to increase upon startup

c. before the pool water temperature reaches 45 °C.

d. operating above 1 kW.

Answer: B.13 d.
Reference: SOP-2 - Startup, Operation, and Shutdown of the Reactor (B.7.e)

Question B.014 [1.0 point] {14.0}
The exposure rate measured from a radioactive experiment at 1 foot is 500 mrem/hr. What would be the exposure rate at 3 feet from the experiment?

a. 20.2 mrem/hr

b. 55.6 mrem/hr

c. 166.7 mrem/hr

d. 277.8 mrem/hr

Answer: B.14 b.
Reference: Radiation Protection Training
(500 mrem/hr)(1 ft)^2= (x)(3 ft)^2= 55.6 mrem/hr

Question B.015 [1.0 point] {15.0}
A Senior Reactor Operator who is "on call" shall be capable of getting to the reactor facility in less than _____ and shall remain within a _____ radius of the facility.

a. 15 minutes, 30 mile

b. 30 minutes, 15 mile

c. 15 minutes, 25 mile

d. 30 minutes, 30 mile

Answer: B.15 b.
Reference: TS 6.2.1

Question B.016 [1.0 point] {16.0}
“Operability of the BNC facility access door shall be checked and documented before operation of the experiment commences each day that the BNC facility is used to carry out a BNC experiment.” This is an example of:

a. a Safety Limit (SL)

b. a Surveillance Requirement (SR)

c. a Limiting Safety System Setting (LSSS)

d. a Limiting Conditions for Operation (LCO)

Answer: B.16 b.
Reference: TS 4.8

Question B.017 [1.0 point] {17.0}
A radioactive source reads 50 Rem/hr on contact. Five hours later, the same source reads 5.0 Rem/hr. How long is the time for the source to decay from a reading of 50 Rem/hr to 50 mRem/hr?

a. 10 hours

b. 15 hours

c. 20 hours

d. 25 hours

Answer: B.17 b.
Reference: $DR = DR_{\circ} * e^{-\lambda t}$
5.0 rem/hr =50 rem/hr* $e^{-\lambda(5hr)}$
Ln(5.0/50) = -λ*5 --> λ=0.4605; solve for t: Ln(.05/50)=-0.4605 (t) → t=15 hours
Or Reduce from 50 Rem to 5 Rem: 5 hours From 5 Rem to 0.5 Rem: 5 hours
From 0.5 Rem to 0.05 Rem: 5 hours Total: 15 hours

Question B.018 [1.0 point] {18.0}
The operator licensing candidate requires submitting the NRC Form 396, Certification of Medical Examination by Facility Licensee, to the NRC Chief Examiner before start date of the examination. This requirement can be found in:

a. 10 CFR Part 26

b. 10 CFR Part 50.59

c. 10 CFR Part 55

d. 10 CFR Part 73

Answer: B.18 c.
Reference: 10 CFR 55.21

Question B.019 [1.0 point] {19.0}
Per WSU Technical Specifications of the Pulse Mode Operation, the maximum safe allowable reactivity insertion shall be calculated _____ for an existing core and prior to pulsing a new or modified core arrangement.

a. Annually
b. Biennially
c. Triennially
d. Semiannually

Answer: B.19 a.
Reference: TS 4.1.2

Question B.020 [1.0 point] {20.0}
Provide the correct class of emergency if a fire or explosion in a reactor-related area that cannot be immediately extinguished and which has the potential of adversely affecting the reactor.

a. Safety Event
b. Unusual Event
c. Alert
d. Site Area Emergency

Answer: B.20 c.
Reference: Emergency Plan, Section 4.0

END OF SECTION B

Question C.001 [1point, 0.166 each] {1.0}
During a Reactor Power Calibration in accordance with SOP-20, indicate whether each of the component's a. through f. are **ON** and operating or **OFF** during the power run.

a. Primary cooling pump
b. Secondary cooling pump
c. Cooling tower
d. Diffuser pump
e. Purification system
f. Pool mixer

Answer: C.01 a. = off; b. = off: c. = off; d. = on; e. = off; f. = on
Reference: SOP-20 - Reactor Power Calibration (C.1)

Question C.002 [1point] {2.0}
The CAM filter shall be changed _____.

a. as part of the reactor startup checkout
b. daily
c. weekly
d. monthly

Answer: C.02 c.
Reference: SOP-8, Maintenance of the Continuous Air Monitor (A)

Question C.003 [1point] {3.0}
Which ONE of the following is the correct source to be used for the Channel Test of the Area Radiation Monitors?

a. C-14
b. Cl-36
c. Sr-90
d. Ra-226

Answer: C.03 d.
Reference: SOP-6, Maintenance of the Area Radiation Monitors (C)

Question C.004 [1point] {4.0}

Per SOP-10 Maintenance of the Reactor Pool Facilities, the reactor pool level alarm shall be tested monthly for operability. What is the total number of float switches test?

a. 1

b. 2

c. 3

d. 4

Answer: C.04 c.

Reference: SOP-10, Maintenance of the Reactor Pool Facilities (C.a through .c)

Question C.005 [1point] {5.0}

Which of the following statements is correct, regarding a reactor pulse at the WSU NRC?

a. Typically, control blade #1, 2, or 4 is withdrawn to a desired power level of 2 kW.

b. The magnitude of the pulse is determined by the anvil height in the rod cylinder.

c. When the mode selector switch is positioned to the “Pulse” mode, only the standard control blades are inhibited from being withdrawn.

d. A transient rod scram occurs 20 seconds on a preset timer once the reactor operator initiates the “fire” button

Answer: C.05 b.

Reference: SAR 4.2.2 Control Rods - Transient Control Rod and Figure 4-15
SOP-2 Startup, Operation, and Shutdown of the Reactor Section D. Pulsing Operations

Question C.006 [1point] {6.0}

Which ONE of the following correctly describes the characteristic of the STARDARD fuel rod used at the WSU reactor?

a. The maximum uranium content is 30% by weight uranium, enriched to less than 20% U-235; and the erbium content is homogeneously distributed with a nominal 0.90% by weight

b. The maximum uranium content is 9% by weight uranium, enriched to less than 20% U-235, and NO erbium content.

c. The maximum uranium content is 20% by weight uranium, enriched to less than 30% U-235; and the erbium content is homogeneously distributed with a nominal 0.90% by weight

d. The maximum uranium content is 30% by weight uranium, enriched to less than 20% U-235; and the erbium content is homogeneously distributed with a nominal 0.50% by weight

Answer: C.06 b.
Reference: Core 35-A diagram, WSU SAR. June 2002, Section 4 and 10
TS 5.2 Reactor Fuel

Question C.007 [1point] {7.0}

The Beam Port Plug alarm signal will trigger:

a. a RED light on its panel ONLY

b. a YELLOW light on Console Alarm Board ONLY

c. a RED light on its panel and a YELLOW light on Console Alarm Board

d. a RED light on its panel, a YELLOW light on Console Alarm Board, and Annunciator sounding

Answer: C.07 a.
Reference: SOP-15 Action in the Event of an Alarm – Section B.3.a

Question C.008 [1point] {8.0}

Which of the following is **NOT** a mode of operation for the pool room and air handling system at the WSU NRC?

a. Normal

b. Isolation

c. Evacuation

d. Dilute

Answer: C.08 c.
Reference: WSU SAR. June 2002, Section 6.2.2 Containment

Question C.009 [1point] {9.0}
Which ONE of the following systems obtains emergency power in the event of a power loss by the Auxiliary Reactor Emergency Supply (ARIES)?

a. Pool Level Alarm
b. Primary Coolant Pump
c. Control Rods
d. Pneumatic Transfer System

Answer: C.09 a.
Reference: SAR 7.4.6, pg. 7-17

Question C.010 [1point] {10.0}
Which ONE of the following is the main function performed by the **DISCRIMINATOR** in the LOG COUNT RATE of the Wide Range Log Channel?

a. To convert the signal from a fission counter to **LINEAR** output over a range of 10^{-8} to 150 percent of full power.

b. To convert the signal logarithmic output of the metering circuit to a δt (delta time) output for period metering purposes.

c. To filter out small pulses due to gamma interactions, passing only pulses due to neutron events within the LOG COUNT RATE.

d. To generate a current signal equal and of opposite polarity as the signal due to gamma generated within the LOG COUNT RATE.

Answer: C.10 c.
Reference: SAR Figure 7-4

Question C.011 [1point] {11.0}
Which of the following alarms/indications WILL directly require a reactor scram?

a. Red HIGH ALARM and light from the Continuous Air Monitor (CAM)
b. Low Pool Water Level
c. Alarm on the Exhaust Gas Monitor
d. < 2 cps on the wide range power instrumentation

Answer: C.11 b.
Reference: WSU SAR, June 2002, Table 7.2-2

Question C.012 [1point] {12.0}
The NPP-1000 in the STEADY STATE Mode provides the indications of:

a. Percent Power ONLY
b. Percent Power and 1 KW Interlock
c. Energy (Mw-sec) and Low Count Rate
d. Peak Power and Energy (Mw-sec)

Answer: C.12 a.
Reference: SAR Figure 7-6

Question C.013 [1point] {13.0}
Reactor is at 100 kW. You receive an Exhaust Gas Monitor (EGM) alarm. Per SOP #18, you should:

a. Immediately secure reactor and notify the Health Physicist on duty
b. Continue with reactor operations and deactivate the EGM alarm
c. Immediately secure reactor and notify the Senior Reactor Operator on duty
d. Continue reactor operations after isolation of the ventilation and also notify the Senior Reactor Operator on duty

Answer: C.13 d.
Reference: SOP-15 - Action in the Event of an Alarm Rev
Section C.e. Exhaust Gas Monitor

Question C.014 [1point] {14.0}
A system of limit switches is used to indicate the position of the air cylinder and the transient rod. Which ONE is the switch actuated when the piston reaches its lower limit of travel?

a. The Drive Up switch
b. The Drive Down switch
c. The Rod Up switch
d. The Rod Down switch

Answer: C.14 d

Reference: SAR 4.2.2, pg. 4-29

Question C.015 [1point] {15.0}

In the event that fuel must be unloaded from the reactor pool, two storage racks in the reactor pool are provided. Which of the following statements correctly identifies an adequate safe storage condition (by TS) of the fuel at the WSU NRC?

a. K_{eff} = 0.75

b. K_{eff} = 1.0

c. pH of the storage water= 8.0

d. storage water temperature= 60 °C

Answer: C.15 a.

Reference: WSU TS, April 26, 2002, Sections 3.3 and 5.5,

Question C.016 [1point] {16.0}

Using the following diagram of an instrumented fuel element match the correct position locator (Column A) to the correct component (Column B).

Column A	Column B
I	A. Zirconium Hydride-Uranium
II	B. Stainless steel
III	C. Erbium Burnable Poison
IV	D. Graphite Reflector
	E. Zirconium Rod
	F. Spacer
	G. Thermocouples

a. **I.C, II.F, III.A, IV.C**

b. **I.D, II.A, III.E, IV.C**

c. **I.D, II.E, III.A, IV.G**

d. **I.C, II.B, III.E, IV.G**

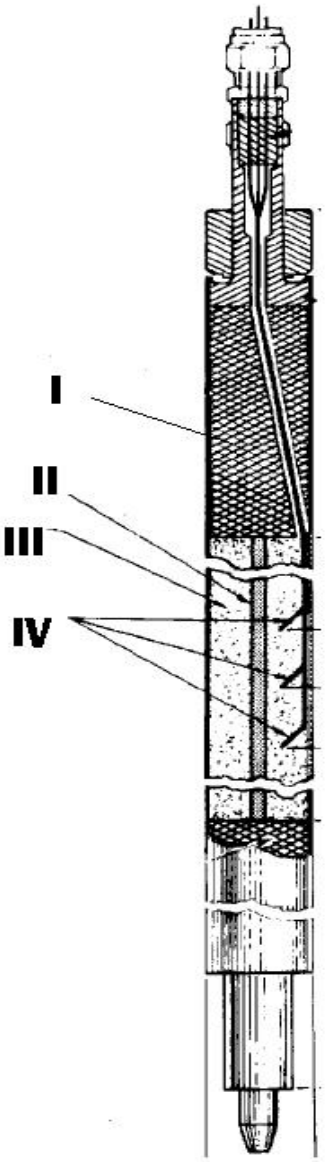

Answer: C.16 c. (I-D, II-E, III-A, IV-G)
Reference: NRC Reference Material for a Standard TRIGA Instrumented Fuel Element

Question C.017 [1point] {17.0}

The source interlock system will prevent rod withdrawal unless source level is above a preset level. This source interlock signal comes from:

a. Log-N Power Channel

b. Linear Channel

c. Fuel Temperature Channel

d. Percent Power Channel (Safety Chanel #2)

Answer: C.17 a.
Reference: SAR 7.3

Question C.018 [1point] {18.0}

Which ONE of the following would indicate a clog in the demineralizer tank?

a. High radiation level at pool surface

b. High flow rate through demineralizer

c. High temperature in demineralizer

d. High pressure upstream of demineralizer

Answer: C.18 d.
Reference: Standard NRC question

Question C.019 [1point] {19.0}

The MAIN purpose of small flow holes drilled at the bottom of the shroud is to:

a. reduce the effects of viscous damping on the blade fall time

b. increase of the blade speed during withdrawal

c. allow water to cool the blade during shutdown

d. prevent corrosion on the control blade

Answer: C.19 a.
Reference: SAR 4.2.2

Question C.020 [1point] {20.0}

A MAIN purpose of the interlock to prevent withdrawal of more than one control rod at a time is to prevent:

a. inadvertently large reactivity insertion

b. damage of control rod drive system

c. initiation of a pulse while on a positive period

d. initiation of a pulse during a reactor startup

Answer: C.20 a.
Reference: TS 3.2.3 Basis

END OF SECTION C

END OF WRITTEN EXAMINATION