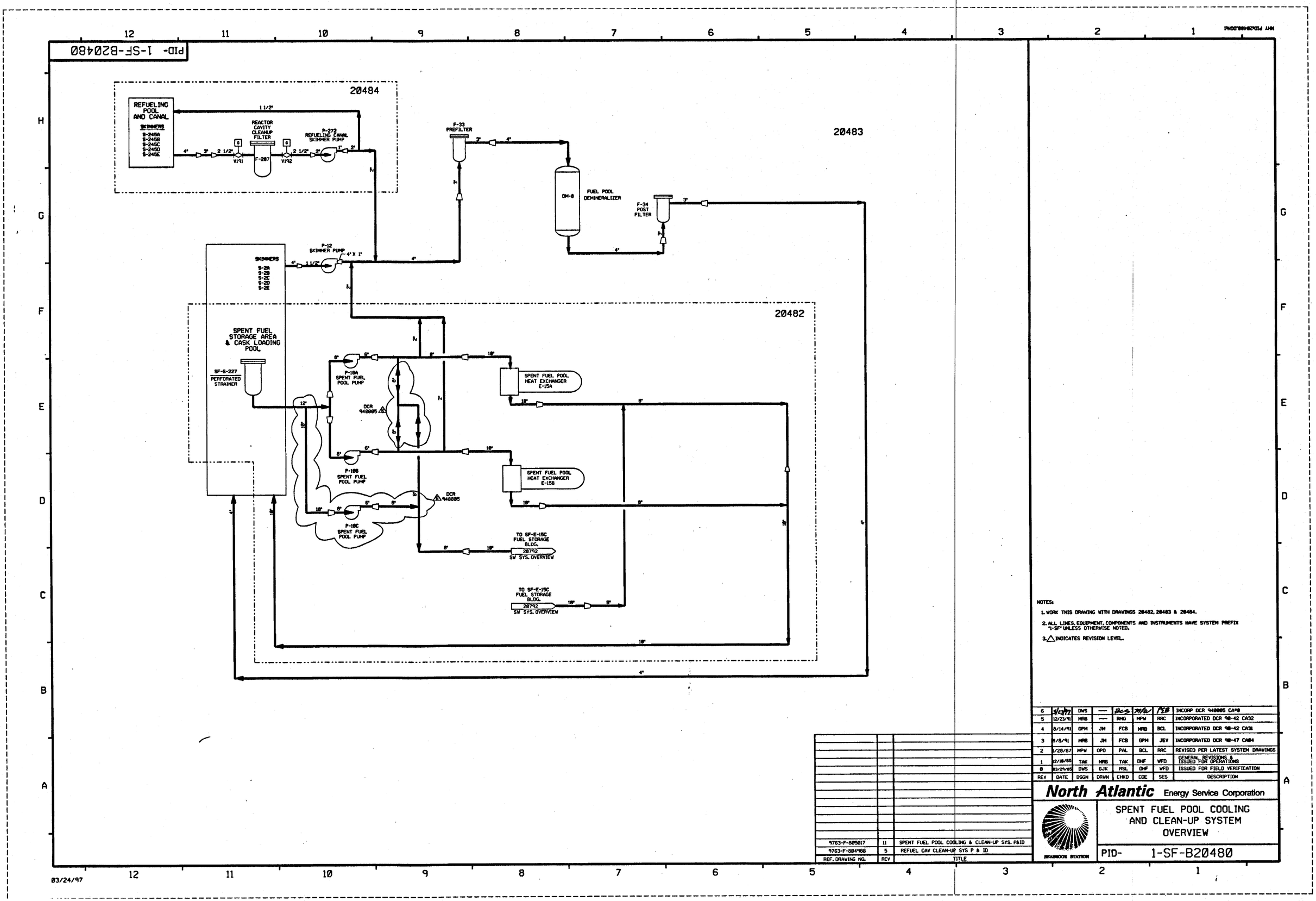

NOTES:

1. WORK THIS DRAWING WITH DRAWINGS 20482, 20483 & 20484.
2. ALL LINES, EQUIPMENT, COMPONENTS AND INSTRUMENTS HAVE SYSTEM PREFIX "1-SF" UNLESS OTHERWISE NOTED.
3. △ INDICATES REVISION LEVEL.

REV	DATE	DSGN	DRWN	CHKD	CDE	SES	DESCRIPTION
6	5/27/97	DWS	—	BCS	MPW	PEB	INCORP DCR 940005 CA#8
5	12/23/91	MRB	—	RMO	MPW	RRC	INCORPORATED DCR 90-42 CA32
4	8/14/91	GPM	JM	FCB	MRB	BCL	INCORPORATED DCR 90-42 CA31
3	8/8/91	MRB	JM	FCB	GPM	JEV	INCORPORATED DCR 90-47 CA04
2	1/28/87	MPW	OPO	PAL	BCL	RRC	REVISED PER LATEST SYSTEM DRAWINGS
1	12/10/85	TAK	MRB	TAK	DHF	WFD	GENERAL REVISIONS & ISSUED FOR OPERATIONS
0	03/29/85	DWS	GJK	RSL	DHF	WFD	ISSUED FOR FIELD VERIFICATION

REF. DRAWING NO.	REV	TITLE
9763-F-805017	11	SPENT FUEL POOL COOLING & CLEAN-UP SYS. P&ID
9763-F-804988	5	REFUEL CAV CLEAN-UP SYS P & ID

North Atlantic Energy Service Corporation

SEABROOK STATION

SPENT FUEL POOL COOLING AND CLEAN-UP SYSTEM OVERVIEW

PID- 1-SF-B20480

PID- 1-SF-B20482

FOR P&ID REFERENCE DRAWINGS, SYMBOLS AND ABBREVIATIONS REFER TO DRAWINGS P&ID - LEGEND 1 AND P&ID - LEGEND 2

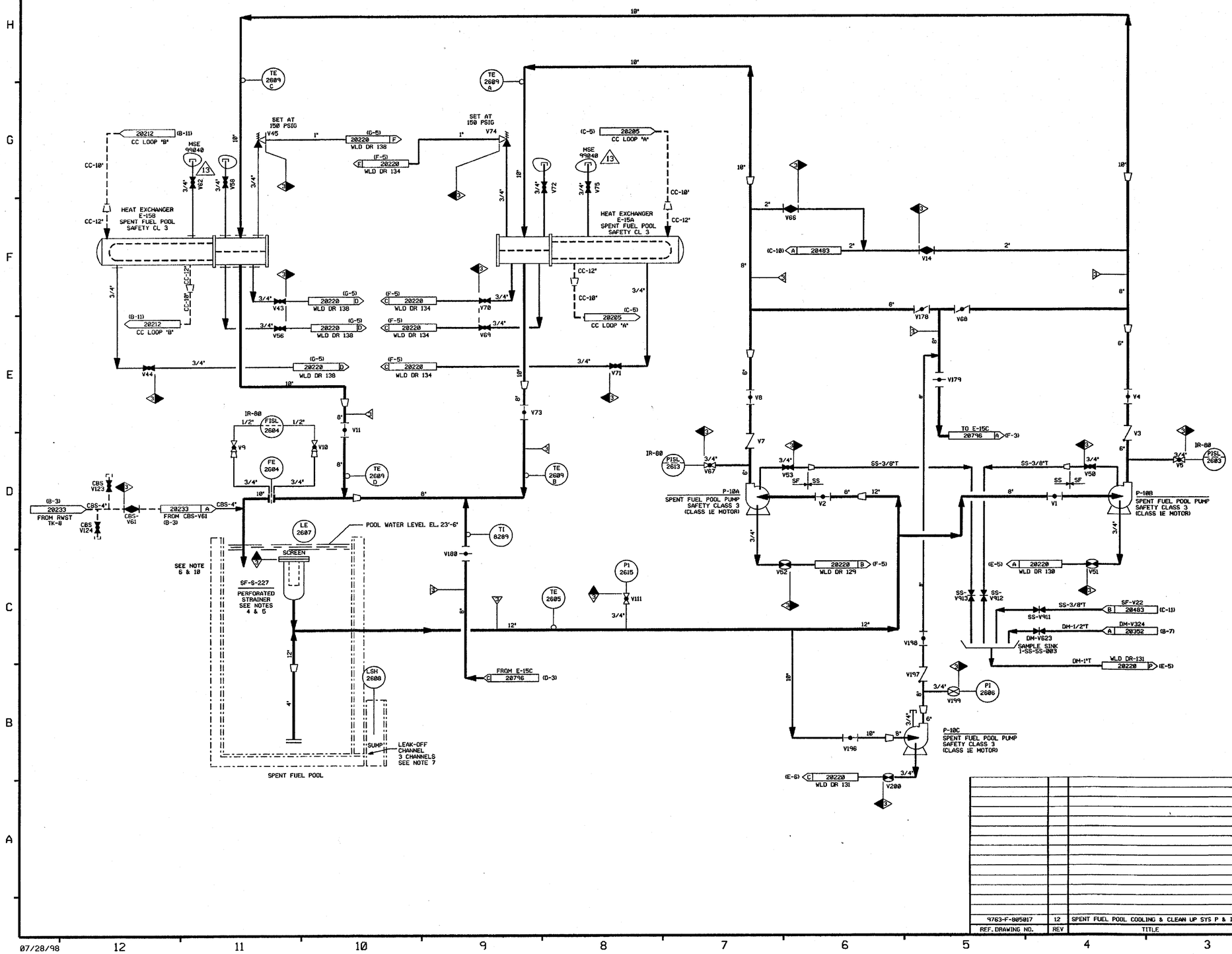

NOTES:

1. WORK THIS DRAWING WITH 20480, 20483 & 20484.
2. PIPING, VALVES, EQUIPMENT & INSTRUMENTS HAVE SYSTEM PREFIX "SF", UNLESS OTHERWISE NOTED.
3. VENTS, DRAINS AND TEST CONNECTIONS CODE BREAKS ARE AT THE DOWNSTREAM END OF THE OUTER ISOLATION VALVE PER 1-HHY-005111 UNLESS NOTED OTHERWISE.
4. PROVIDE BLIND FLANGE; NECESSARY ONLY WHEN DEWATERING POOL. PIPE IS SAFETY CLASS 3; STRAINER IS CLASS NNS.
5. SUCTION IS LOCATED 2 FT BELOW THE NORMAL WATER LEVEL.
6. RETURN TERMINATES 11 FT ABOVE SPENT FUEL ASSEMBLIES.
7. PORTABLE PUMP IS USED TO REMOVE WATER AS REQUIRED FROM LEAK-OFF CHANNEL SUMP TO FLR DRAIN SUMP.
8. △ INDICATES REVISION LEVEL.
9. DELETED
10. EMERGENCY MAKE-UP TO SPENT FUEL POOL FROM THE CST USING TEMPORARY HOSE (CO-20426 G-7).

PORTIONS OF THIS DRAWING ARE

NUCLEAR SAFETY RELATED

REV	DATE	DSGN	DRWN	CHKD	CDE	SES	DESCRIPTION
13	7/24/98	BCS	—	MPW	DWS	RLP	INCORP. MSE 99-848 REV. 0,1,2
12	7/28/98	BCS	—	MPW	DWS	RLP	INCORP. DCR 97-14 DCN 01
11	9/18/97	MPW	—	BCS	DWS	VWS	INCORP. MMOD 96-558 DCN 01
10	5/23/97	DWS	—	MPW	BCS	PEB	FINAL INCORP DCR 940005 DCN#9 & 14
9	3/23/97	DWS	—	BCS	MPW	PEB	2ND PARTIAL INCORP DCR 940005 DCN#9 & 1
8	3/21/97	DWS	—	BCS	MPW	PEB	PARTIAL INCORP DCR 940005 DCN#9 & 1
7	12/23/91	RMC	—	MRB	MPW	RRC	INCORP. DCR 90-42 CA32
6	8/14/91	MRB	JM	FCB	GPM	BCL	INCORP. DCR 90-842 CA8
5	5/21/91	MRB	RMC	JM	BCL	GRM	INCORP. DCR 87-294 CA8
4	9/8/88	MAP	JM	GPM	APL	RRC	REVISED: NOTE 3 AND 4 ADDED: OUT OF FUNCTION INFORMATION ON CBS SYSTEM FOR CLARIFICATION & REFERENCE. DELETED: NNS-1 CL BOUNDARY
3	11/28/86	MPW	OPO	WRD	BCL	RRC	ADDED CONT. REF. LOCS., SPEC. BREAKS DELETED NOTE 9, REVISED VALVE NO'S PER ERECTION ISO.
2	6/16/86	JDM	OPO	DWS	JMS	RRC	REVISE & UPDATE CONTINUATIONS
1	12/18/85	DWS	GFS	TAK	DMF	WFD	ADDED CODE BREAKS AND CORRECTED VALVE POSITIONS PER DWG CHANGE SHT
0	9/24/85	DWS	GJK	RSL	JWK	WFD	ISSUED FOR FIELD VERIFICATION

REF. DRAWING NO.	REV	TITLE
9763-F-805017	12	SPENT FUEL POOL COOLING & CLEAN UP SYS P & ID

North Atlantic Energy Service Corporation

SEABROOK STATION

SPENT FUEL POOL COOLING AND CLEAN-UP SYSTEM DETAIL

PID- 1-SF-B20482

07/28/98

NA PID:20483.DGN

PID- 1-SF-B20483

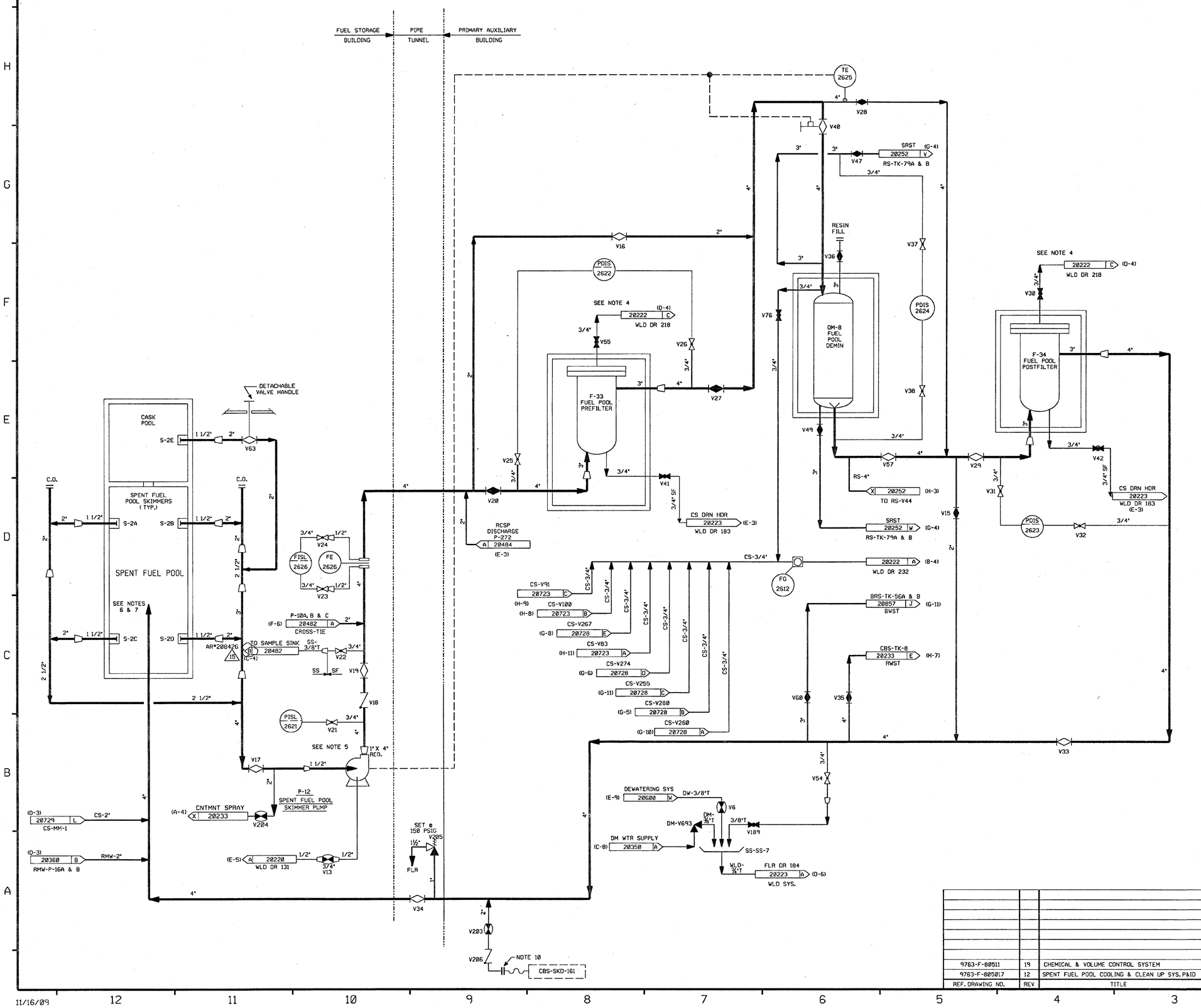

FOR P&ID REFERENCE DRAWINGS, SYMBOLS, AND ABBREVIATIONS REFER TO DRAWINGS P&ID-LEGEND 1 AND P&ID LEGEND 2.

NOTES:

1. WORK THIS DRAWING WITH 20480, 20482 & 20484.
2. ALL LINES, VALVES, EQUIPMENT, COMPONENTS AND INSTRUMENTS HAVE SYSTEM PREFIX 1-SF, UNLESS NOTED OTHERWISE.
3. ALL LINES, VALVES, EQUIPMENT, COMPONENTS AND INSTRUMENTS ARE SAFETY CLASS NNS, UNLESS NOTED OTHERWISE.
4. VENT LINES FROM FILTERS ARE MANIFOLED AND RUN THROUGH A COMMON SIGHT GLASS. VALVES ARE LOCATED NEAR MANIFOLD.
5. SPECIAL TRANSITION PIECE.
6. RETURN TERMINATES 11 FT ABOVE SPENT FUEL ASSEMBLIES.
7. DELETED
8. △ INDICATES REVISION LEVEL.
9. DELETED
10. BLIND FLANGE IS INSTALLED WHEN HOSE IS NOT CONNECTED.

REV	DATE	DSGN	CHKD	CE	DESCRIPTION
15	1-25-10	BCS	JM	RRB	INCORPORATED AR# 208426
14	7/27/09	JM	BCS	TAS	INCORPORATED AR#6779
13	6/29/07	BCS	JM	RRB	INCORP. DCR 06-010 DCN-000
12	11/19/01	JM	BCS	JCM	INCORP. DCR 00-007 CA# 00, 03
11	5/13/97	DWS	MPW	PEB	INCORP. DCR 940005 CA# 0 & 14
10	4/27/97	DWS	BCS	PEB	PARTIAL INCORP. DCR 940005 CA#0 & 7
9	9/7/93	BCL	DWS	JLD	INCORP. MMOD-93-539 CA-0
8	4/5/93	BCL	MPW	BCL	INCORP. MMOD-91-507 CA-0
7	5/8/92	MRB	DWS	BCL	INCORP. MMOD 91-511 CA2 ADDED SYS. PREFIX PER NOTE 2.
6	7/25/91	MRB	JM	JEV	INCORP. DCR 86-244 CA0
5	5/21/91	MRB	JM	GRM	INCORP. DCR 87-294 CA04
4	1/19/87	JDM	WRD	VWS	INCORP. DCR 597
3	10/10/86	MAP	MPW	RRC	DEL. VLV. CS-V741, SHWN. ON CS PID. REV'D PER PIPING ERECTION ISO SF-1700-2 REINCORP. ECA 99/114510A, DELETED UE&C REF DWGS. AND NOTE 9, ADDED CONT. REF'S.
2	6/27/86	JDM	BCL	RRC	INC. ECA 99/112984A RE-INC. 99/114510A
1	6/16/86	TAK	TAK	RRC	GENERAL REVISION & INCORP'D ECA 99/114510A, ISSUED FOR OPERATIONS
0	03/29/85	DWS	JNM	WFD	ISSUED FOR FIELD VERIFICATION

REF. DRAWING NO.	REV	TITLE
9763-F-80511	19	CHEMICAL & VOLUME CONTROL SYSTEM
9763-F-805017	12	SPENT FUEL POOL COOLING & CLEAN UP SYS. P&ID

NEXTera ENERGY SEABROOK

SEABROOK STATION

SPENT FUEL POOL COOLING AND CLEAN-UP SYSTEM DETAIL

PID- 1-SF-B20483

11/16/09

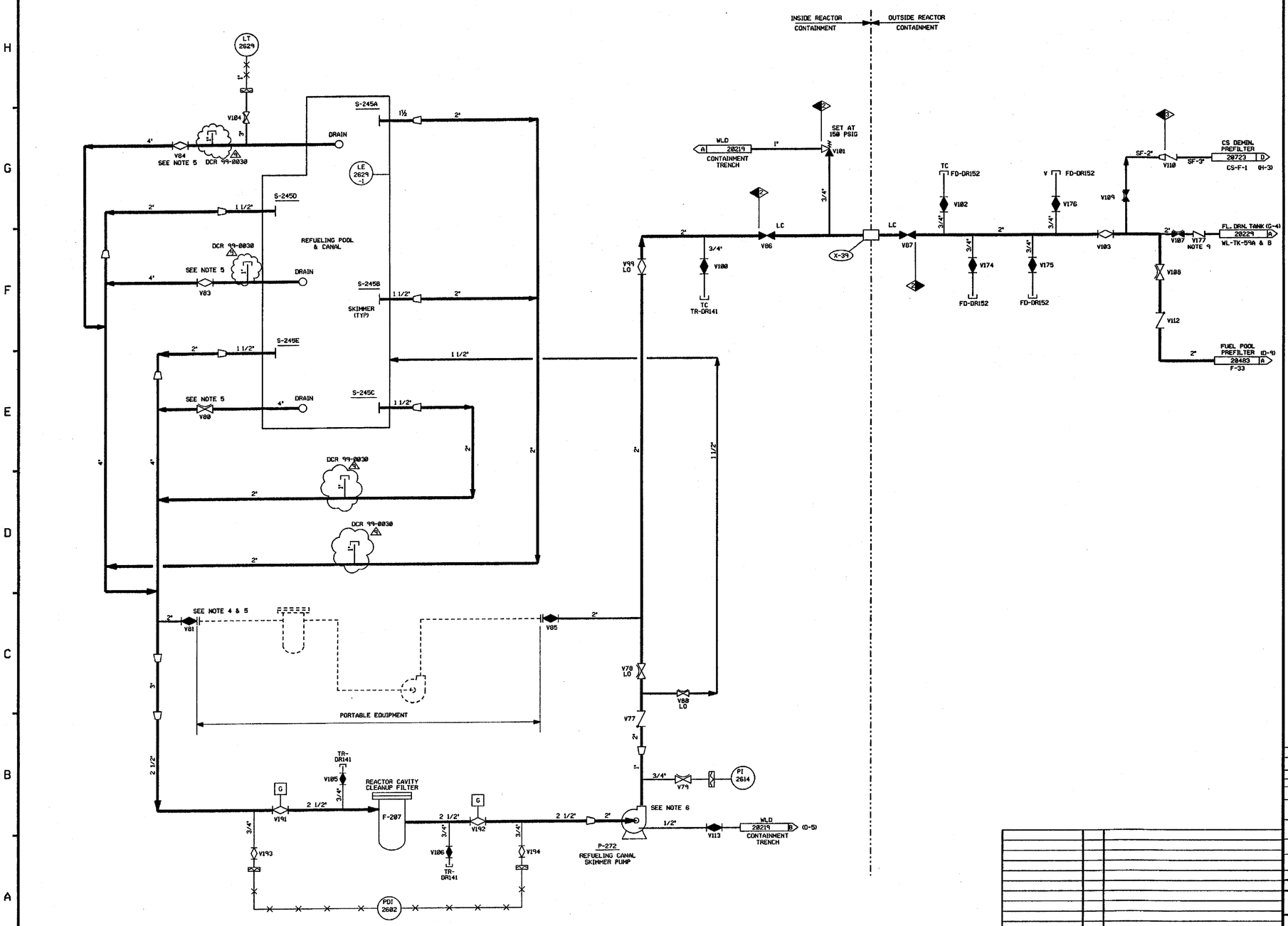

FOR P&ID REFERENCE DRAWINGS, SYMBOLS AND ABBREVIATIONS REFER TO DRAWINGS P&ID - LEGEND 1 AND P&ID - LEGEND 2

NOTES:

1. WORK THIS DRAWING WITH 20480, 20482 & 20483.
2. ALL LINES, EQUIPMENT, COMPONENT & INSTRUMENTS HAVE SYSTEM PREFIX "SF", UNLESS NOTED OTHERWISE.
3. ALL LINES, EQUIPMENT, COMPONENTS & INSTRUMENTS ARE SAFETY CLASS NNS UNLESS NOTED OTHERWISE.
4. REMOVE BLIND FLANGE DURING PLANT POWER OPERATION. CLOSE VALVE & REPLACE BLIND FLANGE PRIOR TO REFUELING.
5. VALVE MUST BE LEFT OPEN DURING PLANT POWER OPERATION.
6. SEE DRAWING 20353 FOR MECHANICAL SEAL SUPPLY TO PUMP P-272
7. DELETED
8. △ INDICATES REVISION LEVEL.
9. 2" SPRING LOADED, PISTON STYLE CHECK VALVE.

PORTIONS OF THIS DRAWING ARE

NUCLEAR SAFETY RELATED

REV	DATE	DSGN	DRWN	CHKD	CDE	SES	DESCRIPTION
9	10/27/00	BCS	——	MRB	MPW	RRC	PARTIAL INCORP DCR 99-0030 DCN-00, 01
8	6-13-97	DWS	——	MPW	FAC	DMO	INCORP DCR 970008 DCN#00
7	12/15/94	MPW	——	BCL	DWS	MHO	INCORP. MMOD 93-545 CA 0
6	9/28/91	GPM	JM	FCB	MRB	IW	INCORP. DCR 86-238 CA0
5	8/8/91	MRB	JM	FCB	GPM	GRM	INCORP. DCR 90-47 CA0 AND DCR 86-163 CA0
4	5/9/89	MRB	FCB	PAL	APL	GRM	INCORP. DCR 86-330 CA 02 REVISED: NOTES 2,3,6, NUCLEAR SAFETY RELATED LABEL.
3	10/17/86	MAP	OPO	BCL	VNK	RRC	INCORP. ECA 99/113343A, ADDED DWG. LOC. COORD., DELETED NOTE 7, REVISED PER UE&C P&ID.
2	6/13/86	DWS	TAK	BLL	JMS	RRC	INCORP. NCR 73/8444C, ADDED WL CONT. CPR-84, APPROVED DESIGN CHG. 1 & 2
1	12/10/85	TAK	MRB	TAK	DHF	WFD	GENERAL REVISIONS & ISSUED FOR OPERATIONS
0	03/29/85	DWS	GJK	JNM	DHF	WFD	ISSUED FOR FIELD VERIFICATION

REF. DRAWING NO.	REV	TITLE
9763-F-805017	12	SPENT FUEL POOL COOLING & CLEAN UP SYS P&ID
9763-F-804988	5	REFUEL CAV CLEAN-UP P & ID

North Atlantic Energy Service Corporation

SEABROOK STATION

SPENT FUEL POOL COOLING & CLEAN-UP SYSTEM DETAIL

PID- 1-SF-B20484

10/25/00

SECURITY-RELATED INFORMATION – WITHHELD UNDER 5 U.S.C. SECTION 552(b)(4) AND 5 U.S.C. SECTION 552(b)(7)(F)

SECURITY-RELATED INFORMATION – WITHHELD UNDER 5 U.S.C. SECTION 552(b)(4) AND 5 U.S.C. SECTION 552(b)(7)(F)

NHY PID:20792.DGN:1

20795

TURBINE BUILDING

CONDENSER WATER BOX PUMP HEAT EXCHANGERS

AR-E-72A

AR-E-72B

MSE 08-090

MSE 08-090

SCC-E-29B

SECONDARY COMPONENT COOLING WATER HEAT EXCHANGERS

SCC-E-29A

SCC-E-185A

AUXILIARY SECONDARY COMPONENT COOLING WATER HEAT EXCHANGERS

SCC-E-185B

CO 8"

CONDENSATE 20422 RECIRC HEADER

CW DISCH. 20672

SERVICE WATER INSPECTION VAULT

20794

INTAKE TRANSITION STRUCTURE

CIRC. WATER PUMP HOUSE

SERV. WATER PUMPS

P-41A

P-41C

P-41B

P-41D

SERV. WATER PUMP HOUSE

DISCHARGE TRANSITION STRUCTURE

PRIMARY AUXILIARY BLDG.

CC-E-17A

PRIMARY COMPONENT COOLING WATER HT EXCHS.

CC-E-17B

S-11

S-10 STRAINERS

DG-E-42B

DIESEL GENERATOR WATER JACKET HEAT EXCHS

DG-E-42A

REACTOR CONTAINMENT

20796

24" OVERFLOW

FUEL STORAGE BUILDING

SF-E-15C

FP 6" FIRE PROTECTION 20268 STANDPIPE SYSTEM

PIPE TUNNEL

20795

20794

SERVICE WATER INSPECTION VAULT

VALVE PIT

FANS

SERVICE WATER COOLING TOWER

P 110A

P 110B

20796

MAX. WATER LEVEL

NOTES:

1. WORK THIS DRAWING WITH DRAWINGS 20794 THRU 20796.
2. ALL PIPING, VALVES, EQUIPMENT AND INSTRUMENTS HAVE SYSTEM PREFIX 'SW', UNLESS NOTED OTHERWISE.
3. △ INDICATES REVISION LEVEL

PORTIONS OF THIS DRAWING ARE

NUCLEAR SAFETY RELATED

REV	DATE	DSGN	CHKD	CE	DESCRIPTION
6	04-23-08	JM	[illegible]	[illegible]	INCORPORATED MSE 08-090 REV 00
5	5/6/99	DWS	MPW	RWS	INCORP DCR 970036 DCN#00 AND DCR 960012 DCN#06
4	11/23/95	MPW	BCS	JEV	INCORPORATED DCR 95-12 CA 0
3	12/23/91	MRB	JM	RRC	INCORPORATED DCR 90-42 CA32
2	8/14/91	MRB	JM	BCL	INCORPORATED DCR 90-42 CA04
1	2/2/87	MPW	WRD	VWS	ADDED NOTE 3 REVISED PER LATEST SYSTEM DWGS.
0	1/10/86	DS	DWS	EWD	ISSUED FOR OPERATIONS

REF. DRAWING NO.	REV	TITLE
9763-F-805033	10	SW-NUCLEAR, P & ID
9763-F-805019	20	SW-NUCLEAR, P & ID
9763-F-805018	14	PRI. COOL. WATER, LOOP-A, P & ID
9763-F-805016	16	PRI. COOL. WATER, LOOP-B, P & ID
9763-F-202481	6	CIRCULATING WATER, P & ID

FPL ENERGY Seabrook Station

SERVICE WATER SYSTEM NUCLEAR OVERVIEW

PID- 1-SW-B20792

04/23/08

PID- 1-SW-B20794

FOR P&ID REFERENCE DRAWINGS, SYMBOLS AND ABBREVIATIONS REFER TO DRAWINGS P&ID - LEGEND 1 AND P&ID - LEGEND 2

NOTES:
1. WORK THIS DRAWING WITH DRAWINGS 20792 THRU 20796.
2. ALL PIPING, VALVES, EQUIPMENT & INSTRUMENTS HAVE SYSTEM PREFIX 'SW', AND 1, FOR UNIT-1, UNLESS NOTED OTHERWISE.
3. VALVES 1-SW-V27 AND V56 ARE PRESET. THESE ARE THE ONLY VALVES TO BE USED FOR FLOW BALANCING WHEN REQUIRED.
4. DELETED
5. △ INDICATES REVISION LEVEL
6. VENTS, DRAINS AND TEST CONNECTION CODE BREAKS ARE AT THE DOWNSTREAM END OF THE OUTER ISOLATION VALVE PER 1-NHY-805111, UNLESS NOTED OTHERWISE.
7. PLATE WELDED TO PIPE TO MAINTAIN CLEANLINESS AND FOREIGN MATERIAL EXCLUSION.
8. INSTRUMENTATION REFERENCES:
   (A) TA LOGIC
10. DELETED.
11. DELETED. EC*249508

SERVICE WATER PUMP HOUSE

PUMP NO.	TOP DRAIN	BOTTOM DRAIN	VIBRATION MONITOR INSTRUMENT TAG #				A
P-41A	V523	V524	21350	21356	21362	21368	
P-41B	V525	V526	21351	21357	21363	21369	
P-41C	V527	V528	21352	21358	21364	21370	
P-41D	V529	V530	21353	21359	21365	21371	
P-110A	V542	V520	21354	21360	21366	21372	V179
P-110B	V521	V522	21355	21361	21367	21373	V180

DETAIL "B"

EQUIP. NO	1 VALVE. NO	2 INSTR. NO	3 VALVE. NO
1-SW-FN-51B	1-SW-V231	1-SW-LG-6116B	1-SW-V232
2-SW-FN-51B	2-SW-V231	2-SW-LG-6116B	2-SW-V232

DETAIL "C"

EQUIP. NO	1 VALVE. NO	2 INSTR. NO
1-SW-FN-51A	1-SW-V230	1-SW-LG-6116A
2-SW-FN-51A	2-SW-V230	2-SW-LG-6116A

DETAIL "A"

SERVICE WATER COOLING TOWER

PORTIONS OF THIS DRAWING ARE
NUCLEAR SAFETY RELATED

REV	DATE	DSGN	CHKD	CE	DESCRIPTION
35	11/21/11	GPS	JWL	DEA	INCORP. EC*249508
34	07/15/10	JM	BCS	DJM	INCORP. EC*156608
33	4/13/08	BCS	JM	RRB	INCORP. MSE 07-895 REV. 00.01 & MMOD 03-504 DCN-00
32	3/23/07	BCS	JM	RRB	INCORP. CR 06-14856 REV. 0
31	6/26/06	JM	BCS	DEA	INCORP. MSE 06-888 REV 00 & REVISED FOR CLARITY
30	6/18/03	BCS	MPW	RRB	INCORP DCR 990028 DCN*21
29	12/19/02	BCS	JM	RSG	INCORP. MSE 02-270 REV. 00
28	7/27/01	MPW	BCS	RRB	INCORP DCR 990028 DCN*01 & 08
27	4/26/01	MPW	BCS	RRB	PARTIAL INCORP DCR 990028 DCN*01
26	3/30/01	MPW	BCS	RRB	PARTIAL INCORP DCR 990028 DCN*01
25	3/02/01	BCS	MPW	RRB	PARTIAL INCORP DCR 990028 DCN*01,08
24	1/12/01	DWS	MPW	RRB	PARTIAL INCORP DCR 990028 DCN*01,08
23	12/12/00	BCS	MPW	RRB	PARTIAL INCORP. DCR 99-28 DCN*01
22	11/11/00	MPW	DWS	RRB	INCORP. DCR 99-31 DCN*00
21	2/25/00	BCS	DWS	MAP	INCORP. DCR 980010 DCN*00
20	7/12/99	DWS	MPW	MAP	PARTIAL INCORP. DCR 980010 DCN*00
19	3/30/99	BCS	DWS	HWM	INCORP. DCR 89-61 CA 00
18	6/08/98	DRL	BCS	VWS	INCORP MMOD 97-521 DCN 00
17	6/10/97	DWS	MPW	JEV	INCORP DCR 960012 CA*0
16	11/27/95	BCS	MPW	JEV	INCORP. DCR 95-12 CA-0.4
15	8/11/95	BCL	DWS	GRM	INCORP. MMOD 92-542 CA-0
14	6/12/95	BCL	DWS	DJM	INCORP. MMOD 94-570 CA0
13	7/12/94	BCL	MPW	JEV	INCORP. MMOD 93-502 CA01
12	4/14/94	BCL	MPW	DMO	INCORP. MMOD 93-517 CA0 & DELETE FLANGES PER DWG 805033
11	8/6/92	BCL	MRB	JEV	RE INCORP. MMOD 91-515 CA0
10	4/20/92	MRB	DWS	JEV	INCORP. MMOD 91-515 CA0
9	12/23/91	RMC	MRB	RRC	INCORP. DCR 90-42, CA32
8	9/11/91	MRB	FCB	JEV	INCORPORATED DCR 89-81 CA0 ADDED: NOTE 8
7	8/14/91	MRB	JM	BCL	INCORP. DCR 90-042 CA31 & MMOD 91-511 CA0
0	1/10/86	DS	DWS	RRC	ISSUED FOR OPERATIONS

REF. DRAWING NO.	REV	TITLE
9763-F-805033	10	SW-NUCLEAR, P&ID.
9763-F-805019	20	SW-NUCLEAR, P&ID.

NEXTera ENERGY SEABROOK

SEABROOK STATION

SERVICE WATER SYSTEM NUCLEAR DETAIL

PID- 1-SW-B20794

03/23/11

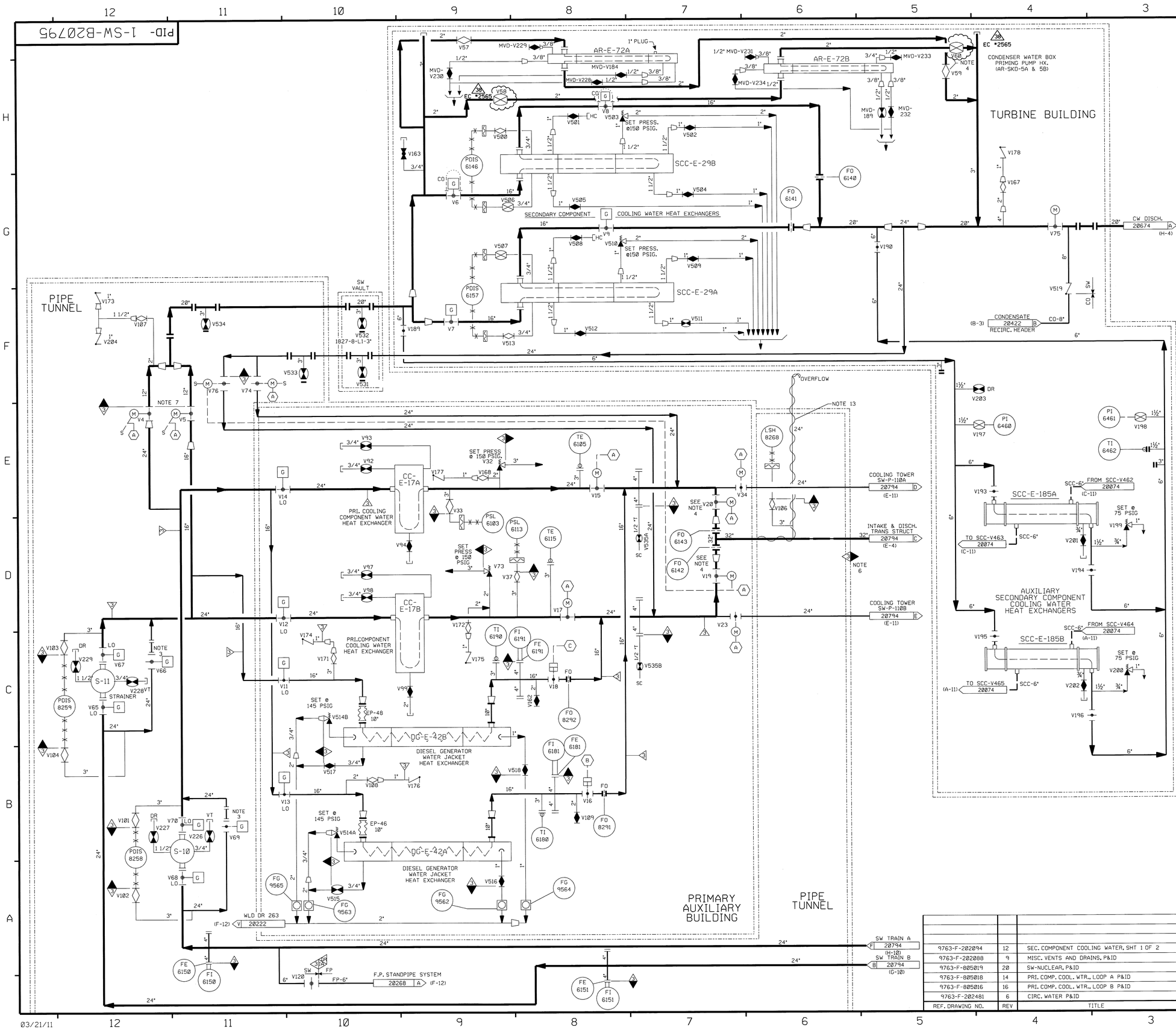

FOR P&ID REFERENCE DRAWINGS, SYMBOLS AND ABBREVIATIONS REFER TO DRAWINGS P&ID-LEGEND 1 AND P&ID-LEGEND 2

NOTES:

1. WORK THIS DRAWING WITH DRAWINGS 20792 & 20794.
2. ALL PIPING, VALVES, EQUIPMENT, & INSTRUMENTS HAVE SYSTEM PREFIX 'SW' UNLESS NOTED OTHERWISE.
3. SPOOL PIECE NECESSARY FOR ADDITIONAL SERVICE WATER STRAINER AT LATER DATE (IF REQUIRED).
4. VALVES 1-SW-V19, 20, 59 AND V60 ARE PRESET. THESE ARE THE ONLY VALVES TO BE USED FOR FLOW BALANCING, WHEN REQUIRED.
6. CLASS BREAK OCCURS WHERE PIPE ENTERS EARTH.
7. VALVES V4 & V5 TO CLOSE ON COMPLETE LOSS OF OFF SITE POWER.
8. XX - DENOTES TITANIUM MATERIAL.
9. DELETED
10. △ INDICATES REVISION LEVEL
11. INSTRUMENTATION REFERENCES
    - (A) TA LOGIC
    - (B) OPEN CMD FROM DG-1A
    - (C) OPEN CMD FROM DG-1B
12. VENTS, DRAINS AND TEST CONNECTION CODE BREAKS ARE AT THE DOWNSTREAM END OF THE OUTER ISOLATION VALVE PER 1-NHY-805111, UNLESS NOTED OTHERWISE.
13. HEAT TRACING HAS BEEN DISCONNECTED AND IS NON-FUNCTIONAL.

PORTIONS OF THIS DRAWING ARE

NUCLEAR SAFETY RELATED

REV	DATE	DSGN	CHKD	CE	DESCRIPTION
38	4/6/11	GPS	JM	BCS	PARTIAL INCORP EC #2565
37	04/23/08	JM	DDD	RRB	INCORP MSE 08-090 REV 00
36	10/12/06	BCS	JM	RRB	INCORP. MMOD 03-504 DCN-00
35	5/17/05	BCS	MPW	RRB	INCORP. CR 05-04228 REV. 0
34	5/8/02	MPW	JM	RRB	INCORP. DCR 99-031 DCN 00
33	11/16/01	BCS	MPW	DEA	INCORP MSE 01-0041 REV. 00
32	1/26/01	MPW	BCS	ARB	INCORP DCR 99-35 DCN#00
31	11/16/00	BCS	MPW	ARB	INCORP MMMOD 99-577 DCN 00 PARTIAL INCORP DCR 99-035 DCN#00
30	8/23/00	BCS	DWS	AJK	INCORP MSE 00-019 REV 00
29	1/10/00	BCS	MPW	DEA	INCORP MSE 00-012 REV 00
28	10/20/99	MPW	DWS	DEA	INCORP MSE 99-303 REV 00
27	9/29/99	DWS	BCS	RRB	INCORP DCR 990007 DCN#00
26	7/12/99	BCS	MPW	MAP	INCORP DCR 980010 DCN#00, PARTIAL DCR 990007 DCN#-00
25	4/30/99	DWS	RWS	GRM	INCORP DCR 970036 DCN#00
24	2/19/99	BCS	MPW	DWS	INCORP DCR 98-0039 DCN-00
23	2/3/98	BCS	MPW	MAP	INCORP DCR 97-0011 DCN-0, MMOD 97-590 DCN-00
22	8/18/97	MPW	BCS	VWS	INCORP MMOD 96-550 DCN 01
21	6/10/97	DWS	MPW	VWS	INCORP DCR 960012 DCN#00, DCR 960016 DCN#00 & 01, MMOD 96-550 DCN#00
20	5/28/97	DWS	MPW	VWS	PARTIAL INCORP DCR 960016 DCN#0 & 1
19	11/27/95	BCL	MPW	JEV	INCORP MMOD 92-542 CA-0
18	6/12/95	BCL	DWS	GRM	INCORP MMOD 94-570 CA-0
17	5/4/95	BCL	DWS	RRB	INCORP MMOD 92-510 CA-0
16	4/14/95	BCL	MPW	RRB	INCORP MMOD 92-510 CA-0
15	7/19/94	BCL	MPW	DMQ	INCORP MMOD 94-530 CA-0

REF. DRAWING NO.	REV	TITLE
9763-F-202094	12	SEC. COMPONENT COOLING WATER, SHT 1 OF 2
9763-F-202088	9	MISC. VENTS AND DRAINS, P&ID
9763-F-805019	20	SW-NUCLEAR, P&ID
9763-F-805018	14	PRI. COMP. COOL. WTR., LOOP A P&ID
9763-F-805016	16	PRI. COMP. COOL. WTR., LOOP B P&ID
9763-F-202481	6	CIRC. WATER P&ID

NEXTera ENERGY SEABROOK

SEABROOK STATION

SERVICE WATER SYSTEM NUCLEAR DETAIL

PID- 1-SW-B20795

PID- 1-SW-B20796

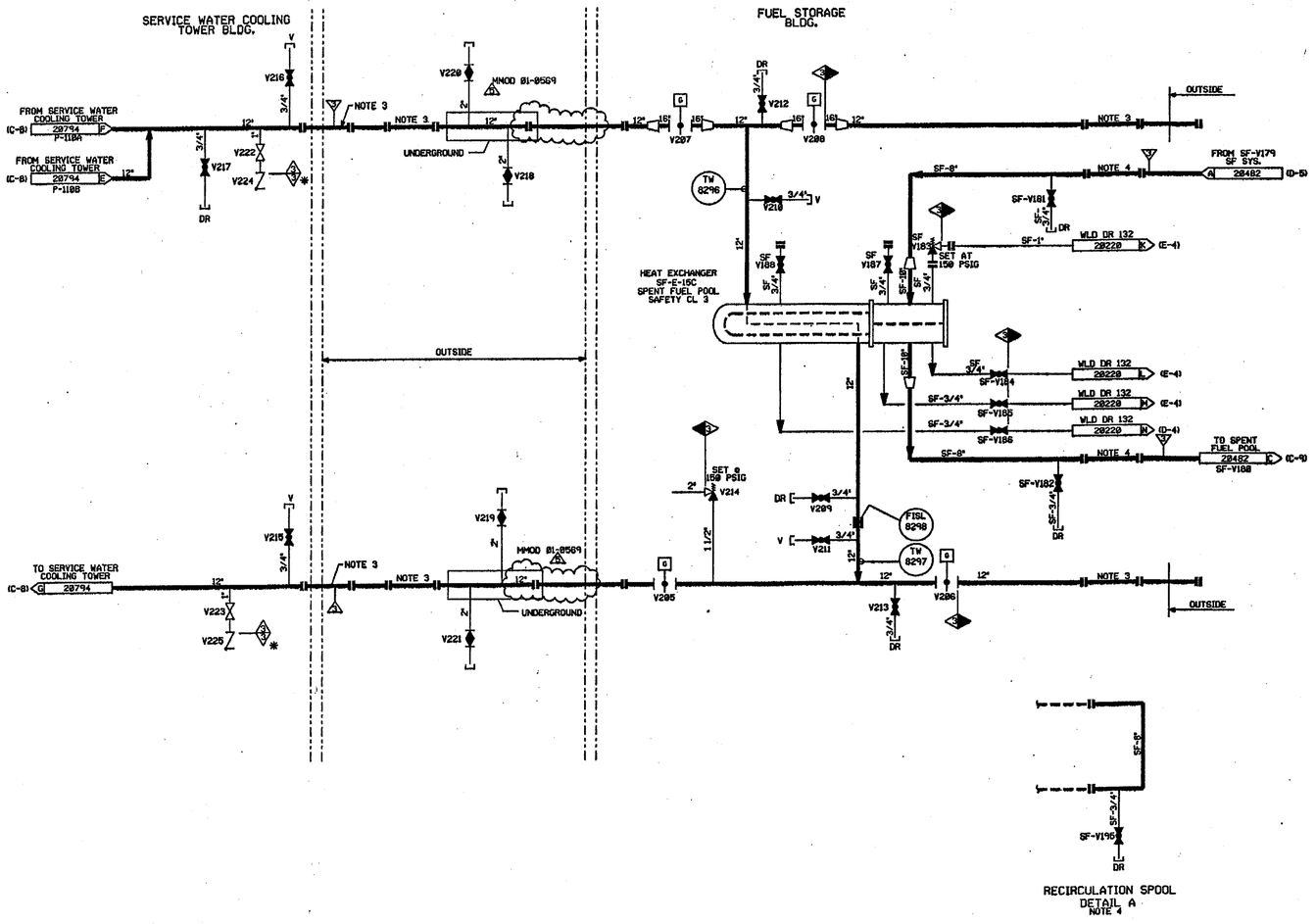

FOR P&ID REFERENCE DRAWINGS, SYMBOLS AND ABBREVIATIONS REFER TO DRAWINGS P&ID - LEGEND 1 AND P&ID - LEGEND 2

NOTES:

1. WORK THIS DRAWING WITH DRAWINGS 28792 THRU 28795.
2. ALL PIPING, VALVES, EQUIPMENT & INSTRUMENTS HAVE SYSTEM PREFIX "SW", AND 1, FOR UNIT-1, UNLESS NOTED OTHERWISE.
3. AT A MINIMUM, UPON COMPLETION OF ASFPC USE, RESTORE SW SYSTEM AS FOLLOWS:
   - REMOVE FABRICATION ENCLOSURE AND REMOVABLE PIPE SPOOL SECTIONS FROM BELOW THE FUEL STORAGE BLDG. (WEST) ROLL-UP DOOR. (REF. SKD 9B0842-1187)
   - REMOVE 1845 AND 1846-83-168-12" NNS PIPE SPOOLS INSIDE THE FUEL STORAGE BLDG. EAST WALL.
   - INSTALL BLANKS ON BOTH ENDS OF SPOOL SECTIONS WHICH REMAIN AT PENETRATION 3193 AND 3194.
   - REMOVE PIPING SPOOLS ON LINES 1845 AND 1846-1-168-12" WHERE THESE LINES EXIT THE GROUND (COOLING TOWER END). REMOVE PIPING SPOOLS WHICH PENETRATE THE COOLING TOWER EAST END LOUVER AND RESTORE LOUVER WITH GRATING PANEL DESCRIBED ON SKD 9B0842-1183, NOTE 2.
4. UPON COMPLETION OF ASFPC USE, LINES 1764 AND 1765-81-151-6" INSIDE THE FUEL STORAGE BLDG., MAY BE REMOVED AND INSTALL BLANKS ON BOTH ENDS OF SECTIONS WHICH REMAIN OR, IF DESIRED, INSTALL RECIRCULATION SPOOL. SEE DETAIL A (C-4)
5. △ INDICATES REVISION LEVEL
6. VENTS, DRAINS AND TEST CONNECTION CODE BREAKS ARE AT THE DOWNSTREAM END OF THE OUTER ISOLATION VALVE PER 1-NHY-005111, UNLESS NOTED OTHERWISE.

PORTIONS OF THIS DRAWING ARE
NUCLEAR SAFETY RELATED

REF. DRAWING NO.	REV	TITLE
1-NHY-028794	7	SERVICE WATER SYS. NUCLEAR DETAIL
1-NHY-028482	4	SF POOL COOLING & CLEAN-UP SYS DET.
9763-F-885033	18	SW-NUCLEAR, P&ID.
9763-F-885819	28	SW-NUCLEAR, P&ID.

REV	DATE	DSGN	CHKD	CE	DESCRIPTION
5	8-8-95	BCS	[illegible]	[illegible]	INCORP. MMOD 81-8569 DCN-88
4	6/12/95	BCL	DWS	DJM	INCORP. MMOD 94-578 CA-8
3	12/8/94	BCL	MRB	RRC	RE-INCORP. DCR 98-42, CA33
2	6/4/92	MRB	BCL	RRC	RE-INCORP. DCR 98-42, CA33
1	1/6/92	JM	MRB	RRC	INCORP. DCR 98-42, CA33
0	12/24/91	JM	MRB	MPW	ISSUED FOR OPERATIONS

North Atlantic Energy Service Corporation

SEABROOK STATION

SERVICE WATER SYSTEM NUCLEAR DETAIL

PID- 1-SW-B20796

05/30/95

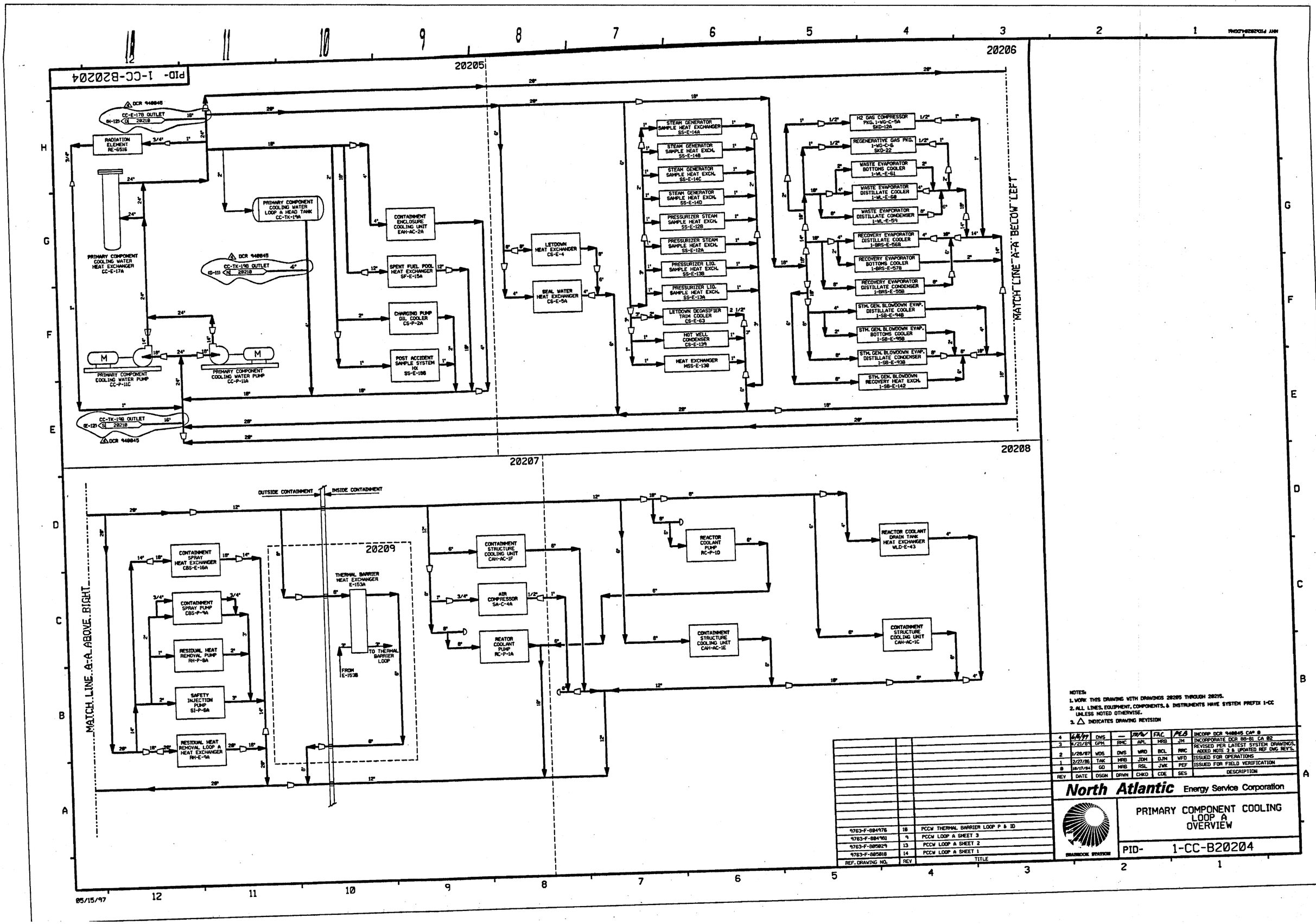

NOTES:
1. WORK THIS DRAWING WITH DRAWINGS 20205 THROUGH 20215.
2. ALL LINES, EQUIPMENT, COMPONENTS, & INSTRUMENTS HAVE SYSTEM PREFIX 1-CC UNLESS NOTED OTHERWISE.
3. △ INDICATES DRAWING REVISION

REV	DATE	DSGN	DRWN	CHKD	CDE	SES	DESCRIPTION
4	6/16/99	DWS	—	[illegible]	FAC	PEB	INCORP DCR 940045 CA# 0
3	4/21/89	GPM	RHC	APL	MRB	JM	INCORPORATE DCR 88-81 CA 02
2	1/28/87	WDS	DWS	WRD	BCL	RRC	REVISED PER LATEST SYSTEM DRAWINGS, ADDED NOTE 3 & UPDATED REF DWG REV'S.
1	2/27/86	TAK	MRB	JDM	DJM	WFD	ISSUED FOR OPERATIONS
0	10/17/84	GD	MRB	RSL	JWK	PEF	ISSUED FOR FIELD VERIFICATION

REF. DRAWING NO.	REV	TITLE
9763-F-804976	10	PCCW THERMAL BARRIER LOOP P & ID
9763-F-804981	9	PCCW LOOP A SHEET 3
9763-F-805029	13	PCCW LOOP A SHEET 2
9763-F-805018	14	PCCW LOOP A SHEET 1

North Atlantic Energy Service Corporation

SEABROOK STATION

PRIMARY COMPONENT COOLING LOOP A OVERVIEW

PID- 1-CC-B20204

PID- 1-CC-B20205

FOR P&ID REFERENCE DRAWINGS, SYMBOLS AND ABBREVIATIONS REFER TO DRAWINGS P&ID - LEGEND 1 AND P&ID - LEGEND 2

NOTES:

1. WORK THIS DRAWING WITH DRAWINGS B20204 AND B20206 THROUGH B20215.
2. ALL LINES, EQUIPMENT, COMPONENTS AND INSTRUMENTS HAVE SYSTEM PREFIX "1-CC", UNLESS NOTED OTHERWISE.
3. PERMANENT SPOOL PIECE INSTALLATION SHOWN. TEMPORARY STRAINER IS USED IN PLACE OF SPOOL PIECE DURING INITIAL FLUSHING OPERATION. STRAINER TO BE REMOVED BEFORE PLANT START-UP.
4. (N) CLOSE ON HEAD TANK TK-19A LOW LEVEL SIGNAL. SIGNAL TO V426 & V427 ON DWG CC-20206, AND V975 & V1298 ON THIS DWG.

   (P) SIGNAL TO V122, V168, V121 & V57 ON DWG. CC-20207
5. VENT & DRAIN CODE BREAKS ARE AT THE DOWNSTREAM END OF THE OUTER ISOLATION VALVE PER 1-NHY-805111 UNLESS OTHERWISE NOTED.
6. △ - INDICATES REVISION LEVEL.
7. CONTAINMENT ENCLOSURE AIR HANDLING FOR AC-2A SEE DWG 1-MAH-20495 (D-6).
8. CONNECTION TO BE USED FOR FLUSHING SEE DWG DM-20350 (F-9) & NOTE 7.
9. QUICK DISCONNECTS MAY BE INSTALLED UPSTREAM OF PIPE CAPS AS DEEMED NECESSARY BY STATION STAFF TO FACILITATE VENT AND DRAIN OPERATIONS.

PORTIONS OF THIS DRAWING ARE

NUCLEAR SAFETY RELATED

REV	DATE	DSGN	CHKD	CE	DESCRIPTION
25	10-9-08	JM	BCS	JM	INCORP MMOD 03-504 DCN 00
24	3/25/03	MPW	JM	BCS	INCORP. CR 02-13396
23	6/11/02	BCS	JM	MAP	INCORP DCR 00-020 DCN-00
22	1/18/99	BCS	MPW	RRB	REINCORP DCR 960025 DCN 02
21	1/6/99	DWS	MPW	PEB	REINCORP DCR 940045 CA*00
20	11/4/98	MPW	BCS	MAP	INCORP DCR 960025 DCN 02
19	5/26/98	MPW	BCS	MAP	REVISED PER FP 51349
18	5/7/98	MPW	MRB	PEB	REINCORP DCR 960025 DCN 00
17	6/13/97	DWS	MPW	PEB	REINCORP DCR 940045 CA*0 & 1
16	6/6/97	DWS	MPW	PEB	INCORP DCR 940045 CA*0 & 1, DCR 920015 DCN*0, DCR 960015 DCN*0,1 & 23, DCR 960025 DCN*00 & 01. ALSO RELOCATED INSTRUMENT REFERENCE NOTES "N" & "P" FROM THE P&ID BODY TO NOTE 4.
15	11/27/95	MPW	BCS	PEB	PARTIAL INCORP MMOD 920590 CA*0, 1
14	3/7/95	BCL	MPW	DMQ	INCORP MMOD 920590 CA*0
13	11/29/94	DWS	MPW	MHD	INCORP MMOD 930545 CA*0
12	4/14/94	BCL	MPW	DMQ	INCORP. MMOD 93-517 CA0
11	4/20/92	MRB	DWS	JEV	INCORP. MMOD 91-515 CA0
10	12/16/91	FCB	RMC	BCL	INCORP. MMOD 91-511 CA01
9	11/12/91	RMC	JM	JEV	INCORP. MMOD 91-511 CA 00 AND DCR 86-447 CA 00
8	2/26/91	MRB	FCB	BCL	INCORP. MMOD 90-648 CA01
7	4/21/89	GPM	APL	GRM	INCORPORATE DCR 88-81 CA 02
6	3/22/88	GPM	APL	RRC	REVISED: NOTE 4 & 5, PIPING & INSTR. REFERENCE SIGNAL. ADDED: NOTE 7 & 9, CONT. DWG NO'S & COORD. DELETED: NNS-1 CLASS DESIGNATION.
5	6/16/87	MPW	PAL	PAG	VALVE V975 SHOWN OPEN
4	11/4/86	JDM	WRD	RRC	ADDED CONT. DWG. COORD. LEGEND NOTE MISSING LINE SIZE. ADDED OPERATOR TO VALVES PER REF. DWG. REVIEW. REMOVED SAFETY CLASS BREAKS FROM VENTS AND DRAINS DUE TO THE USE OF NOTE 5. REMOVED PIPE SPEC. BREAKS.
3	9/12/86	BCL	MAP	RRC	INCORP. ECA 19/808327C. REVISED PER PIPING ERECTION ISO'S CC-752-02 & CC-752-06
2	6/18/86	JDM	DWS	RRC	INCORP. ECA 19/112526B. DELETE DUPLICATE VENT LINE, ADD REF. DWG., PROVIDE DETAIL FOR RM-SKD-82
1	02/27/86	TAK	JDM	WFD	INCORP. ECA 19/3167C, 19/808327C, & 99/806109A, ISSUED FOR OPERATIONS
0	10/17/84	GD	RSL	PEF	ISSUED FOR FIELD VERIFICATION

REF. DRAWING NO.	REV	TITLE
9763-F-900115	3	PCCW LOOP A MITD
9763-F-900145	3	PCCW LOOP A MITD
9763-M-506194	9	CC PUMPS P-11A & P-11C CONTROL LOOP DIAG
9763-F-805018	14	PCCW LOOP A-SHEET 1 P&I DIAGRAM
9763-F-804981	9	PCCW LOOP A-SHEET 3 P&I DIAGRAM

FPL ENERGY Seabrook Station

PRIMARY COMPONENT COOLING LOOP A DETAIL

PID- 1-CC-B20205

PUMP	VALVE
P-11A	V13
P-11C	V8

10/02/08

CCW SUPPLY 20205 (H-4) B — 28" — V426 — 18"

FC — CLOSE ON "T" SIGNAL — "T" — (N) 20205

STEAM GENERATOR SAMPLE HEAT EXCH SS-E-14A DWG 20521 (C-12) — V33 — TW 2153 — V41 SET @ 150 P.S.I.G. — V43

STEAM GENERATOR SAMPLE HEAT EXCH SS-E-14B DWG 20521 (E-12) — V34 — TW 2154 — V42 SET @ 150 P.S.I.G. — V44

STEAM GENERATOR SAMPLE HEAT EXCH SS-E-14C DWG 20521 (C-12) — V35 — TW 2155 — V45 SET @ 150 P.S.I.G. — V46

STEAM GENERATOR SAMPLE HEAT EXCH SS-E-14D DWG 20521 (B-12) — V36 — TW 2156 — V47 SET @ 150 P.S.I.G. — V48

PRESSURIZER LIQUID & STEAM SAMPLE HEAT EXCH SS-E-12B DWG 20518 (G-5) — V412 — TW 2169 — V413 SET @ 150 P.S.I.G. — V414

PRESSURIZER LIQUID & STEAM SAMPLE HEAT EXCH SS-E-12A DWG 20518 (G-7) — V37 — TW 2157 — V49 SET @ 150 P.S.I.G. — V58

R.C. LOOPS 1 & 3 LIQ. SAMPLE HEAT EXCH SS-E-13B DWG 20518 (E-5) — V415 — TW 2194 — V416 SET @ 150 P.S.I.G. — V417

R.C. LOOPS 1 & 3 LIQ. SAMPLE HEAT EXCH SS-E-13A DWG 20518 (E-7) — V38 — TW 2158 — V51 SET @ 150 P.S.I.G. — V52

LETDOWN DEGASIFIER TRIM COOLER CS-E-63 DWG 20724 (J-8) — V600 — FO — 2 1/2" — CV 7 CS — TW 2195 — 2 1/2" — 3"

HOT WELL CONDENSER CS-E-139 DWG 20724 (H-3) — FO — 1" — 3/4" — CV 6 CS — TW 2196 — 1" — 2" — 1" — SET @ 150 P.S.I.G. — V598 — 3/4"

SEAL SUPPLY HEAT EXCHANGER MSS-E-13B DWG 20354 (F-12) — V970 — SET @ 150 P.S.I.G. V343 — V599 CLOSE ON T SIGNAL — "T"

LETDOWN HEAT EXCH CS-E-4 DWG 20722 (G-5) — V338 — 8" — 6" — SET @ 150 P.S.I.G. V342 — 3/4" — V1304 — TI 2276 — TV 130 CS — FC — 3" — 6" — FC — V341

SEAL WATER HEAT EXCHANGER CS-E-5A DWG 20726 (H-7) — LO — V337 — 4" — 3/4" — LT — V339 — 4" — V — 3/4" — V1187

V1200 — V1200 — V1201

CCW (A-6) C 20205 RETURN — 20" — V427 — "T" FC CLOSE ON "T" SIGNAL

P.A.B. — TK. FARM NORTH TUNNEL — W.P.B.

AFTERCOOLER WG-SKD-102 DWG 20771 (D-8) — WG-E-150 — SET @ 225 PSIG V1281 — V988 — REGENERATIVE COMPRESSOR WG-SKD-22 DWG 20771 (A-5) — COMP. WG-C-6 — V657 — V658 — V656 — WG-FG-16-1 — V655 — SET @ 225 PSIG V1280 — 20225 A (F-6) WLD DR 481

AFTER COOLER WG-E-82A — SET @ 150 PSIG V659 — V660 — V661 — 1/2" WG — VENT — 20225 A (F-7) WLD DR 478 — H2 GAS COMP. PKG. A WG-SKD-12A DWG 20772 (C-10)

COMP. WG-C-5A — WG-FG-21A — V662 — TW 2045 — V498

V1261 — V1066 — V987 — 1/2" WG — 20225 B (F-7) WLD DR 478

TW 2047 — V492 — V949 — DR 494

V499 — V500 — V1201 DR 450

WASTE EVAPORATOR DISTILLATE COOLER 1-WL-E-62 DWG 20830 (D-7) — TW 2038 — V501 — TCV 7 — V955 DR 450 — V502 — V503

WASTE EVAPORATOR BOTTOMS COOLER 1-WL-E-61 DWG 20830 (B-10) — TW 2039 — V507 — TCV 15 — V508 — V509 — DR433 DR V913

WASTE EVAPORATOR DISTILLATE CONDENSER 1-WL-E-59 DWG 20830 (E-3) — TW 2037 — V504 — PCV 3 — V954 DR 450 — V505 — V506

SET @ 150 P.S.I.G. (A-10) B 20226 WLD DR 421 — V511 — V510

RECOVERY EVAPORATOR DISTILLATE COOLER 1-BRS-E-56B DWG 20859 (C-6) — TW 2028 — V512 — TCV 7B — V953 DR 454 — V513 — V514

V942 DR 421 — AR 208344 — V846 DR 474

RECOVERY EVAPORATOR BOTTOMS COOLER 1-BRS-E-57B DWG 20859 (E-10) — TW 2026 — V518 — TCV 15B — V978 DR 519 — V519 — V520

RECOVERY EVAPORATOR DISTILLATE CONDENSER 1-BRS-E-55B DWG 20859 (F-3) — TW 2027 — V515 — PCV 3B — V952 — V516 — V517 — 20226 A (H-10) WLD DR 433

V521 — V522 — 1/2" T

STEAM GEN BLOWDOWN EVAPORATOR DISTILLATE COOLER 1-SB-E-94B DWG 20630 (B-9) — TW 2058 DR 448 — V526 — TCV 7B — V951 DR 459 — V527 — V528

STEAM GEN BLOWDOWN EVAPORATOR BOTTOMS COOLER 1-SB-E-95B DWG 20630 (C-6) — TW 2029 — V529 — TCV 15B — V977 DR 469 — V530 — V531 — DR467 DR V910

STEAM GEN BLOWDOWN EVAPORATOR DISTILLATE CONDENSER 1-SB-E-93B DWG 20630 (F-12) — TW 2057 — V523 — PCV 3B — V950 DR 469 — V524 — V525 — V667 — V917 — SET @ 150 PSIG — TW 2036

WLD-DR-543 (B-11) B 20227 — V864 — V1174 DR 543 — V967

STEAM GENERATOR BLOWDOWN RECOVERY HEAT EXCHANGER 1-SB-E-142 DWG 20627 (H-8) — V865 — TCV 6852 — V956 DR 458 — V866 — V857 — V918 — WLD-DR-543 3/4" 20227 C (B-11)

FISL 2193 — V630 — V631 — FE 2193

V1246 — 18" — MM-780 — V1247 — COPPER STRIP CORROSION TEST CYLINDER MM-400 — V1248

V969 DR 421 — AR 208345 — 3/4" — 14"

V1249 — 1/2" T — V863 — DR 474 — V

P.A.B. — TK. FARM NORTH TUNNEL — TK. FARM NORTH TUNNEL — W.P.B.

FOR P&ID REFERENCE DRAWINGS, SYMBOLS AND ABBREVIATIONS REFER TO DRAWINGS P&ID-LEGEND 1 AND P&ID-LEGEND 2.

NOTES:

1. WORK THIS DRAWING WITH DRAWINGS 20204, 20205 AND 20207, THROUGH 20215.
2. ALL LINES, EQUIPMENT, COMPONENTS & INSTRUMENTS HAVE SYSTEM PREFIX 1-CC UNLESS NOTED OTHERWISE.
3. INSTRUMENT REFERENCES
   - (B) FROM SB-PT-38 DWG. (20630)
   - (C) FROM SB-TE-7B DWG. (20630)
   - (D) FROM SB-TE-15B DWG. (20630)
   - (E) FROM BRS-PT-38 DWG. (20859)
   - (F) FROM BRS-TE-7B DWG. (20859)
   - (G) FROM BRS-TE-15B DWG. (20859)
   - (H) FROM WL-PT-3 DWG. (20830)
   - (I) FROM WL-TE-7 DWG. (20830)
   - (J) FROM WL-TE-15 DWG. (20830)
   - (K) FROM SB-TE-6852 DWG. (20627)
   - (M) FROM TE-130 LETDOWN HEAT EXCHANGER CS-E-4 OUTLET DWG. (20722)
   - (N) CLOSE ON HEAD TANK TK-19A LOW LEVEL SIGNAL
4. △ INDICATES REVISION LEVEL.
5. DELETED
6. VENT & DRAIN CODE BREAKS ARE AT THE DOWNSTREAM END OF THE OUTER ISOLATION VALVE PER 1-NHY-805111 UNLESS OTHERWISE NOTED.

PORTIONS OF THIS DRAWING ARE

NUCLEAR SAFETY RELATED

REV	DATE	DSGN	CHKD	CE	DESCRIPTION
16	1-25-10	BCS	JM	RRB	INCORP AR 208344 & 208345
15	9/24/03	BCS	JM	RRB	INCORP DCR 02-012 DCN-00, 01
14	2/27/03	BCS	MPW	TAS	INCORP DCR 00-019 DCN-00
13	6/3/02	JM	MPW	RRB	INCORP MSE 01-0110 REV 00 AND PARTIAL OF MMOD 95-0574 DCN 00
12	3/27/96	MPW	BCS	RRB	INCORP MMOD 93-544 CA01
11	9/28/95	BCL	MPW	RJF	INCORP MMOD 93-544 CA0
10	4/2/92	MRB	BCL	JEV	INCORP MMOD 91-515 CA02
9	9/24/90	MRB	JM	BCL	INCORP MMOD 90-516 CA0
8	5/23/88	GPM	APL	PAG	INCORP. DCR 86-409 CA04
7	3/22/88	GPM	APL	RRC	REVISED: NOTES 3 & 6, INSTR. REFERENCE SIGNAL, SKID PIPING & EQUIP. DESCRIPTION. ADDED: CONT DWG NUMBERS & COORD'S., VENT DESIGNATION. DELETED: NNS-1 CL DESIGNATION.
6	6/16/87	MPW	PAL	VWS	VALVES V846 & V863 SHOWN OPEN. ADDED VALVES CV-7 & CV-6 PREVIOUSLY SHOWN ON CS-20724, EQUIP. REFERENCE DWG'S. DELETED: VALVE NO'S (N/A I&C VALVES)
5	1/19/87	MRJ	WRD	VWS	ADDED CC PIPING PREVIOUSLY SHOWN ON SB-20627, REVISED TO FLEX HOSE HEAT TRACING, WAS IN ERROR, DELETED NOTE 5. FILLED IN NOTE 3 LATERS.
4	11/6/86	JDM	PAL	RRC	ADDED CONT DWG COORD'S, LEGEND NOTE. CORRECTED VALVE TYPES PER REF DWG.
3	8/22/86	BCL	WRD	PHH	REVISED TO REFLECT AS-BUILT CONDITION
2	6/19/86	JDM	DWS	RRC	REVISED VALVE NUMBER, REV. WG SKID SUPPLY. INCORP. ECA 99/1139208 & REV. CHANGE ITEM NO. 1 & 2 PER 804981 REV 9
1	2/27/86	TAK	JDM	WFD	ISSUED FOR OPERATIONS AND INCORP. ECA 73/5424B
0	10/17/84	GD	RSL	PEF	ISSUED FOR FIELD VERIFICATION

REF. DRAWING NO.	REV	TITLE
9763-F-805612	13	RADIOACTIVE GAS WASTE SYS. SHT. 2 P & ID
9763-F-805611	13	RADIOACTIVE GAS WASTE SYS. SHT. 1 P & ID
9763-F-805018	14	PCCW LOOP A SHEET 1-P&I DIAGRAM
9763-F-804981	9	PCCW LOOP A SHEET 3-P&I DIAGRAM

NEXTera ENERGY SEABROOK

SEABROOK STATION

PRIMARY COMPONENT COOLING LOOP A DETAIL

PID- 1-CC-B20206

11/12/09

PID- 1-CC-B20207

NHY P1D20207.DGN1

CONTAINMENT STRUCTURE COOLING UNIT
CAH-AC-1F
DWG 20505 (D-8)

REACTOR COOLANT PUMP
RC-P-1A
DWG 20841 (H-7)

FOR P&ID REFERENCE DRAWINGS, SYMBOLS AND ABBREVIATIONS REFER TO DRAWINGS P&ID - LEGEND 1 AND P&ID - LEGEND 2

NOTES:

1. WORK THIS DRAWING WITH DRAWINGS 20204, 20205, 20206, & 20208 THROUGH 20215.
2. ALL LINES, EQUIPMENT, COMPONENTS AND INSTRUMENTS HAVE SYSTEM PREFIX CC UNLESS NOTED OTHERWISE.
3. EQUIPMENT ISOLATION VALVE INSIDE CONTAINMENT ARE OPERABLE FROM THE CONTAINMENT ANNULUS.
4. VENT, DRAIN & TEST CONNECTIONS CODE BREAKS ARE AT THE DOWNSTREAM END OF THE OUTER ISOLATION VALVE PER 1-NHY-805111 UNLESS OTHERWISE NOTED.
5. △ INDICATES REVISION LEVEL
6. INSTRUMENT REFERENCES
   (P) CLOSE ON "P" SIGNAL OR HEAD TANK 19A LOW LOW LEVEL SIGNAL DWG. 20205
7. UNION OR FLANGED CONNECTION USED FOR PRE-PLANNED MAKEUP STRATEGY. SEE FP59989.

MSE 07-183 △12

PORTIONS OF THIS DRAWING ARE
NUCLEAR SAFETY RELATED

REV	DATE	DSGN	CHKD	CE	DESCRIPTION
12	1-8/-08	GPS	JM	G/F	INCORP. MSE 07-183 REV. 0
11	10/03/06	JM	BCS	RRB	INCORP. MMOD 03-504 DCN 00
10	6/7/05	BCS	JM	RRB	INCORP. CR 05-05358 REV. 0
9	2/27/03	BCS	MPW	TAS	INCORP DCR 00-019 DCN-00
8	5/3/99	BCS	RWS	GRM	REVISE P SIGNAL SYMBOL PER LOGIC DWG 1-NHY-503271
7	6/11/97	MPW	DWS	DWS	INCORP MMOD 91-559 CA-00
6	4/19/94	BCL	MPW	DMQ	INCORP MMOD 93-517 CA-0
5	10/20/92	BCL	MRB	WFZ	INCORP MMOD 91-559 CA-0 (PARTIAL)
4	4/2/92	MRB	DWS	JEV	INCORP MMOD 91-515 CA0
3	2/27/89	MRB	GPM	RRC	INCORPORATED DCR 88-0065 CA 0 REVISED: NOTE 4 AND CLARIFIED DUPLICATION OF ASSOCIATED SYSTEMS AND INTERFACES. ADDED: NOTE 6 DELETED: NNS-1 CLASS BOUNDARY AND MATERIAL SPEC. BREAKS
2	11/26/86	MRJ	WRD	RRC	ADDED CONT FLAG COORD'S & NOTE 5. ADDED CLASS FLAGS & REVISED SET PRESS PER UE&C P&ID STATUS OF INCOMPLETE ITEMS IS N/A, REVISED NOTE 4.
1	2/27/86	TAK	JDM	WFD	ISSUED FOR OPERATIONS
0	10/17/84	GD	RSL	PEF	ISSUED FOR FIELD VERIFICATION

REF. DRAWING NO.	REV	TITLE
9763-F-805029	13	PCCW LOOP A SHEET 2 P&I DIAGRAM
9763-F-804981	9	PCCW LOOP A SHEET 3 P&I DIAGRAM

FPL ENERGY Seabrook Station

PRIMARY COMPONENT COOLING LOOP A DETAIL

PID- 1-CC-B20207

01/23/08

PID- 1-CC-B20208

FOR P&ID REFERENCE DRAWINGS, SYMBOLS AND ABBREVIATIONS REFER TO DRAWINGS P&ID - LEGEND 1 AND P&ID - LEGEND 2

REACTOR COOLANT PUMP
RC-P-1D

CONTAINMENT STRUCTURE COOLING UNIT
CAH-AC-1E

CONTAINMENT STRUCTURE COOLING UNIT
CAH-AC-1C

CONTAINMENT BUILDING

NOTES:
1. WORK THIS DRAWING WITH DRAWINGS 28204, 28205, 28206, 28207, & 28208, THROUGH 28215.
2. ALL LINES, EQUIPMENT, COMPONENTS & INSTRUMENTS HAVE SYSTEM PREFIX 1-CC UNLESS NOTED OTHERWISE.
3. ALL LINES, EQUIPMENT, COMPONENTS AND INSTRUMENTS ARE SAFETY SAFETY CLASS N, UNLESS NOTED OTHERWISE.
4. EQUIPMENT ISOLATION VALVES LOCATED INSIDE CONTAINMENT ARE OPERABLE FROM THE CONTAINMENT ANNULUS.
5. VENT & DRAIN CODE BREAKS ARE AT THE DOWNSTREAM END OF THE OUTER ISOLATION VALVES PER DESIGN STANDARD M-881 UNLESS OTHERWISE NOTED.
6. △ INDICATES REVISION LEVEL.

REV	DATE	DSGN	DRAWN	CHKD	CE	LDE	DESCRIPTION
3	4/6/94	MRB	—	DWS	BCL	JEB	INCORP. MMOD 91-515 CAB 2...
2	11/26/86	MRJ	DPO	VRD	BCL	RMC	REMOVED SPEC BREAKS ADDED CONT. FLAG COORD'S & NOTE 6.
1	2/27/86	TAK	WES	JDM	DJH	MFD	ISSUED FOR OPERATIONS
0	10/17/84	GD	MRB	RSL	JWK	PEF	ISSUED FOR FIELD VERIFICATION

9763-F-805829 REF. DRAWING NO. | 13 REV | PCCW LOOP A SHEET 2-P&I DIAGRAM TITLE

PSNH PUBLIC SERVICE OF NEW HAMPSHIRE

SEABROOK STATION

PRIMARY COMPONENT COOLING LOOP A DETAIL

PID- 1-CC-B20208

03/24/92

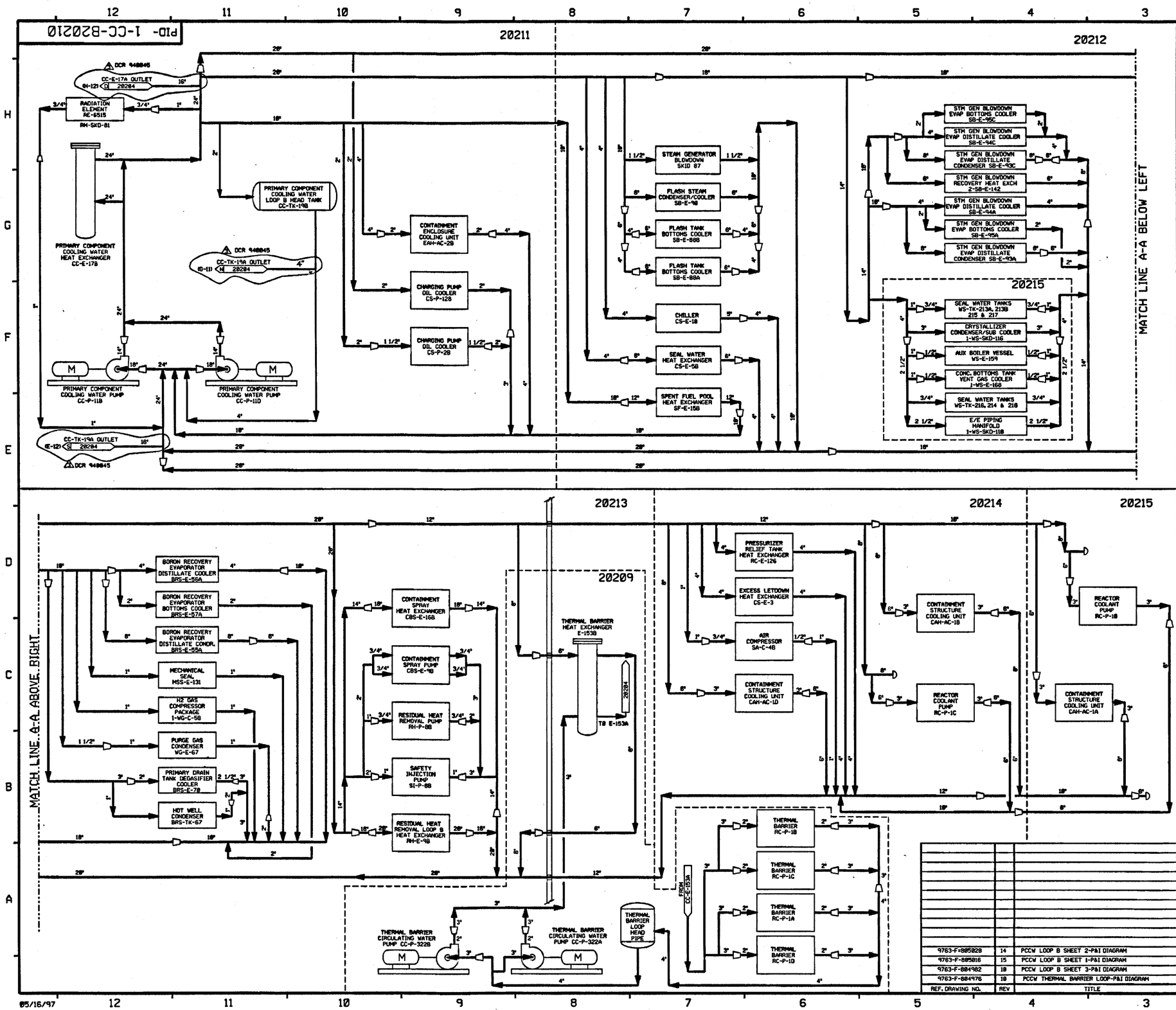

NOTES:
1. WORK THIS DRAWING WITH DRAWINGS 20204 THROUGH 20209 & 20211 THROUGH 20215.
2. ALL LINES, EQUIPMENT, COMPONENTS, & INSTRUMENTS HAVE SYSTEM PREFIX 1-CC, UNLESS NOTED OTHERWISE.
3. △ -INDICATES DRAWING REVISION.

REV	DATE	DSGN	DRWN	CHKD	CDE	SES	DESCRIPTION
3	6/6/97	DWS	—	[illegible]	FAC	PEB	INCORP DCR 940045 CAP 8
2	1/27/87	WDS	TAK	WRD	BCL	VWS	REVISED PER LATEST SYSTEM DWG'S AND ADDED NOTE 3.
1	2/27/86	TAK	WES	JDM	DJM	WFD	ISSUED FOR OPERATIONS
0	10/17/84	GD	MRB	RSL	JWK	PGF	ISSUED FOR FIELD VERIFICATION

REF. DRAWING NO.	REV	TITLE
9763-F-805028	14	PCCW LOOP B SHEET 2-P&I DIAGRAM
9763-F-805016	15	PCCW LOOP B SHEET 1-P&I DIAGRAM
9763-F-804982	10	PCCW LOOP B SHEET 3-P&I DIAGRAM
9763-F-804976	10	PCCW THERMAL BARRIER LOOP-P&I DIAGRAM

North Atlantic Energy Service Corporation

SEABROOK STATION

PRIMARY COMPONENT COOLING LOOP B OVERVIEW

PID- 1-CC-B20210

05/16/97

PID- 1-CC-B20211

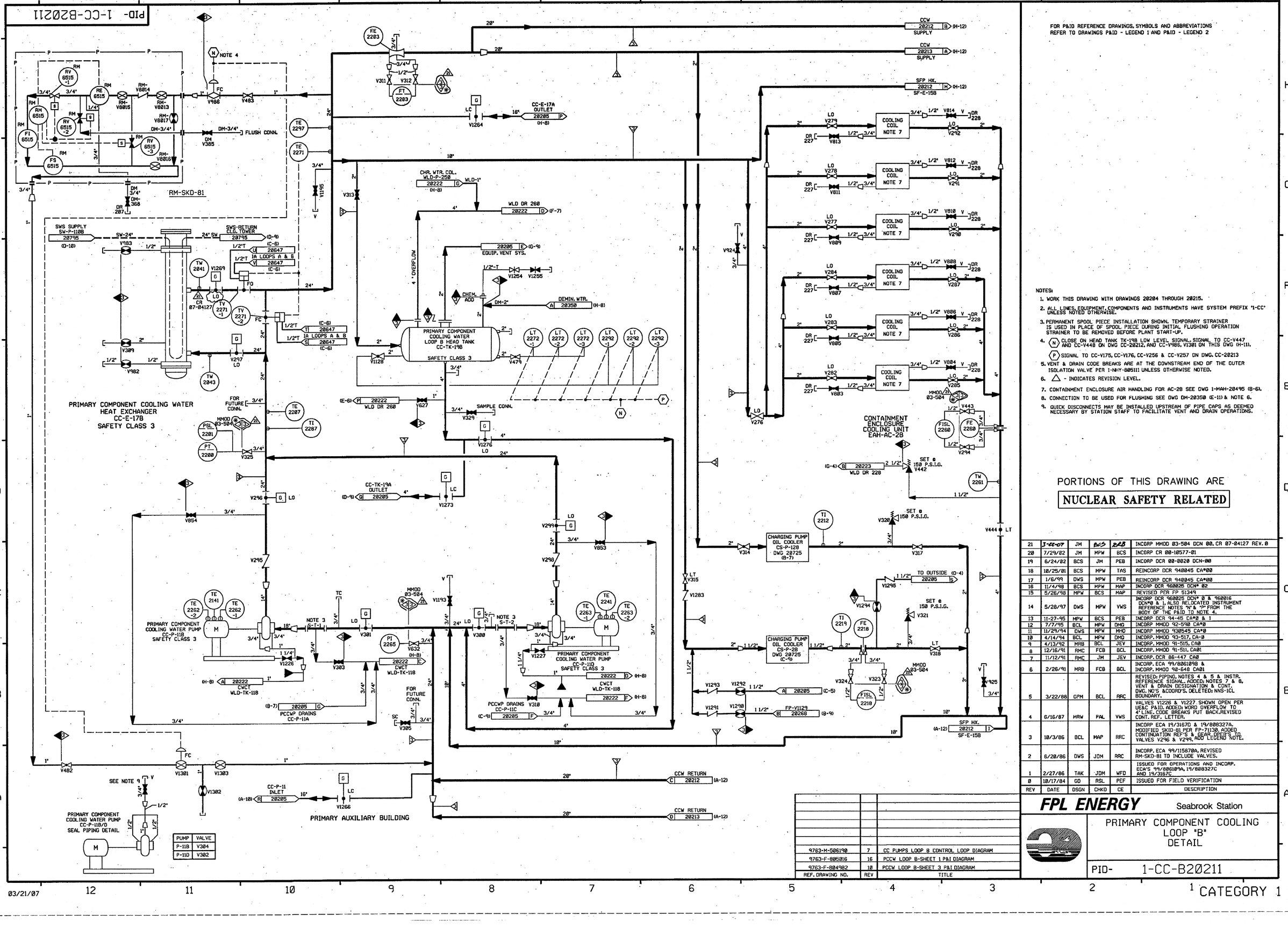

FOR P&ID REFERENCE DRAWINGS, SYMBOLS AND ABBREVIATIONS REFER TO DRAWINGS P&ID - LEGEND 1 AND P&ID - LEGEND 2

NOTES:

1. WORK THIS DRAWING WITH DRAWINGS 20204 THROUGH 20215.
2. ALL LINES, EQUIPMENT, COMPONENTS AND INSTRUMENTS HAVE SYSTEM PREFIX "1-CC" UNLESS NOTED OTHERWISE.
3. PERMANENT SPOOL PIECE INSTALLATION SHOWN. TEMPORARY STRAINER IS USED IN PLACE OF SPOOL PIECE DURING INITIAL FLUSHING OPERATION STRAINER TO BE REMOVED BEFORE PLANT START-UP.
4. (N) CLOSE ON HEAD TANK TK-19B LOW LEVEL SIGNAL. SIGNAL TO CC-V447 AND CC-V448 ON DWG CC-20212, AND CC-V986, V1301 ON THIS DWG (H-11).
   (P) SIGNAL TO CC-V175, CC-V176, CC-V256 & CC-V257 ON DWG. CC-20213
5. VENT & DRAIN CODE BREAKS ARE AT THE DOWNSTREAM END OF THE OUTER ISOLATION VALVE PER 1-NHY-605111 UNLESS OTHERWISE NOTED.
6. △ - INDICATES REVISION LEVEL.
7. CONTAINMENT ENCLOSURE AIR HANDLING FOR AC-2B SEE DWG 1-MAH-20495 (B-6).
8. CONNECTION TO BE USED FOR FLUSHING SEE DWG DM-20350 (E-11) & NOTE 6.
9. QUICK DISCONNECTS MAY BE INSTALLED UPSTREAM OF PIPE CAPS AS DEEMED NECESSARY BY STATION STAFF TO FACILITATE VENT AND DRAIN OPERATIONS.

PORTIONS OF THIS DRAWING ARE

NUCLEAR SAFETY RELATED

REV	DATE	DSGN	CHKD	CE	DESCRIPTION
21	3-22-07	JM	BCS	RAB	INCORP MMOD 03-504 DCN 00, CR 07-04127 REV. 0
20	7/29/02	JM	MPW	BCS	INCORP CR 00-10577-01
19	6/24/02	BCS	JM	PEB	INCORP DCR 00-0020 DCN-00
18	10/25/01	BCS	MPW	TAS	REINCORP DCR 940845 CA#00
17	1/6/99	DWS	MPW	PEB	REINCORP DCR 940845 CA#00
16	11/4/98	BCS	MPW	MAP	INCORP DCR 960025 DCN# 02
15	5/26/98	MPW	BCS	MAP	REVISED PER FP 51349
14	5/28/97	DWS	MPW	VWS	INCORP DCR 960025 DCN# 0 & 960016 DCN#0 & 1; ALSO RELOCATED INSTRUMENT REFERENCE NOTES "N" & "P" FROM THE BODY OF THE P&ID TO NOTE 4.
13	11-27-95	MPW	BCS	PEB	INCORP DCR 94-45 CA#3 & 1
12	7/7/95	BCL	MPW	DMD	INCORP MMOD 92-568 CA#0
11	11/29/94	DWS	MPW	MHD	INCORP MMOD 930545 CA#0
10	4/14/94	BCL	MPW	DMD	INCORP. MMOD 93-517, CA-0
9	4/13/92	MRB	BCL	JEV	INCORP. MMOD 91-515, CA0
8	12/16/91	RMC	FCB	BCL	INCORP. MMOD 91-511, CA01
7	11/12/91	RMC	JM	JEV	INCORP. DCR 88-447 CA0
6	2/26/91	MRB	FCB	BCL	INCORP. ECA 99/8001098 & INCORP. MMOD 90-548 CA01
5	3/22/88	GPM	BCL	RRC	REVISED: PIPING, NOTES 4 & 5 & INSTR. REFERENCE SIGNAL. ADDED: NOTES 7 & 8, VENT & DRAIN DESIGNATION & CONT. DWG. NO'S. &COORD'S. DELETED: NNS-ICL BOUNDARY.
4	6/16/87	MRW	PAL	VWS	VALVES V1226 & V1227 SHOWN OPEN PER UE&C P&ID. ADDED: WORD OVERFLOW TO 4"LINE. CODE BREAKS PUT BACK. REVISED CONT. REF. LETTER.
3	10/3/86	BCL	MAP	RRC	INCORP ECA 19/3167D & 19/8808327A. MODIFIED SKD-81 PER FP-7173A. ADDED CONTINUATION REF'S & GEAR. DEP'S TO VALVES V296 & V299. ADD LEGEND NOTE.
2	6/20/86	DWS	JDM	RRC	INCORP. ECA 99/115870A. REVISED RM-SKD-81 TO INCLUDE VALVES.
1	2/27/86	TAK	JDM	WFD	ISSUED FOR OPERATIONS AND INCORP. ECA'S 99/8801099A, 19/8283276 AND 19/3187C.
0	10/17/84	GD	RSL	PEF	ISSUED FOR FIELD VERIFICATION

REF. DRAWING NO.	REV	TITLE
9763-M-506198	7	CC PUMPS LOOP B CONTROL LOOP DIAGRAM
9763-F-805016	16	PCCW LOOP B-SHEET 1 P&I DIAGRAM
9763-F-804982	10	PCCW LOOP B-SHEET 3 P&I DIAGRAM

FPL ENERGY Seabrook Station

PRIMARY COMPONENT COOLING LOOP "B" DETAIL

PID- 1-CC-B20211

03/21/07

CATEGORY 1

PID- 1-CC-B20212

PRIMARY AUXILIARY BLDG. | TANK FARM NORTH TUNNEL | WASTE PROCESSING BLDG.

(H-4) CCW 20211 SUPPLY CCW 20211 SUPPLY (H-4)

V447 FC "T" CLOSE ON "T" SIGNAL N 20211

STEAM GENERATOR BLOWDOWN SKID 87 DWG 20626 (E-8) — SET @ 150 P.S.I.G. V973 — TI 2205 — V971 V972 V1179 V1197

FLASH STEAM CONDENSER/COOLER SB-E-90 DWG 20626 (D-3) — PCV 1922 SB FO — V542 V543 V544 V545 — SET @ 150 P.S.I.G. V546

FLASH TANK BOTTOMS COOLER SB-E-88B DWG 20626 (C-8) — SET @ 150 P.S.I.G. V536 — TCV 1912 SB FO — V532 V533 V534 V535

FLASH TANK BOTTOMS COOLER SB-E-88A DWG 20626 (C-5) — SET @ 150 P.S.I.G. V541 — TCV 1913 SB FO — V537 V538 V539 V540

CHILLER CS-E-18 DWG CS-20727 (E-4) CONDENSER — SET @ 150 P.S.I.G. V336 — TW 2284 — V334 V1219 V335

SEAL WATER HEAT EXCH. CS-E-58 DWG 20726 (H-4) — SET @ 150 P.S.I.G. V1168 — DR 180 V V1188 — LO V1142 V1144 DR 180 — LT V1143 — V1146 DR 180

SPENT FUEL POOL HEAT EXCH SF-E-158 DWG 28482 (G-12) — "T" SIGNAL FC V445 — FISL 2178 — MMOD 83-504 — V169 V170 — TW 2125 — FE 2176 — V688 DR 129

PRIMARY AUXILIARY BLDG. | FUEL STORAGE BLDG. — (E-4) A 20220 WLD DR 129 — SET @ 150 P.S.I.G. V171 — V172 LT

CCW RETURN I 20211 (B-3)

CCW RETURN C 20211 (A-6)

CLOSE ON "T" SIGNAL FC V448

FISL 2164 — V1238 V989 — FE 2164

PRIMARY AUXILIARY BLDG. | TANK FARM NORTH TUNNEL | WASTE PROCESSING BLDG.

CCW SUPPLY 20213 B (H-12)

SET @ 150 P.S.I.G. V481 — 2 1/2" 20226 A (A-10) WLD DR 428

STEAM GENERATOR BLOWDOWN EVAPORATOR BOTTOMS COOLER SB-E-95C DWG 20631 (C-6) — TW 2864 — TCV 15C SB — V588 V581 V582 — V908 DR 446 DR

STEAM GENERATOR BLOWDOWN EVAPORATOR DISTILLATE COOLER SB-E-94C DWG 20631 (B-8) — TW 2863 — TCV 7C SB FO — V572 V573 V577 V578 V579 — V984 DR 469

STEAM GENERATOR BLOWDOWN EVAPORATOR DISTILLATE CONDENSER SB-E-93C DWG 20631 (F-12) — TW 2862 — PCV 3C SB FC — V574 V575 V576 — V963 DR 469

STEAM GENERATOR BLOWDOWN EVAPORATOR HEAT EXCHANGER 2-SB-E-142 DWG (LATER) — TW 2836 2-SB — TCV 6852 2-SB FO — V868 V869 V870 V871 — V962 DR 458 — SET PRESS @ 150 PSIG 2-V667 — 2-V917 — V968 — DR 543 (C-11) B 28227 3/4" 2-V918 — DR 543 (B-11) A 28227 — DR 466 V1191

STEAM GENERATOR BLOWDOWN RECOVERY BLDG. — TANK FARM WPB

STEAM GENERATOR BLOWDOWN EVAPORATOR DISTILLATE COOLER SB-E-94A DWG 20629 (B-7) — TW 2825 — TCV 7A SB FO — V561 V582 V566 V567 V568 — V961 DR 469

STEAM GENERATOR BLOWDOWN EVAPORATOR BOTTOMS COOLER SB-E-95A DWG 20629 (C-10) — TW 2859 — TCV 15A SB — V569 V570 V571 — V909 DR 465

STEAM GENERATOR BLOWDOWN EVAPORATOR DISTILLATE CONDENSER SB-E-93A DWG 20629 (F-3) — TW 2824 — PCV 3A SB FC — V563 V564 V565 — V908 DR 469

1/2"T

CCW SUPPLY 20215 A (H-7) WS SYS.

CCW RETURN 20215 B (H-3) WS SYS.

DR 474 V V861 — V862 DR 474 V 3/4"

MM-781 — V1250 V1251 COPPER STRIP CORROSION TEST CYLINDER V1252 V1253 1/2"T

CCW 20213 RETURN (B-12)

NOTES:
1. WORK THIS DRAWING WITH DRAWINGS 20284 THRU 20215.
2. ALL LINES, EQUIPMENT, COMPONENTS, AND INSTRUMENTS HAVE SYSTEM PREFIX 1-CC UNLESS NOTED OTHERWISE.
3. INSTRUMENT REFERENCES
   - (B) FROM SB-PT-3A DWG. 1-SB-28629
   - (F) FROM SB-TE-7A DWG. 1-SB-28629
   - (G) FROM SB-TE-15A DWG. 1-SB-28629
   - (H) FROM SB-PT-3C DWG. 1-SB-28631
   - (I) FROM SB-TE-7C DWG. 1-SB-28631
   - (J) FROM SB-TE-15C DWG. 1-SB-28631
   - (K) FROM SB-TE-6852 DWG. 1-SB-28627
   - (N) CLOSE ON HEAD TANK TK-19B LOW LEVEL SIGNAL.
   - (P) TO CS-PS-374A DWG. 1-CS-28727
4. VENT & DRAIN CODE BREAKS ARE AT THE DOWNSTREAM END OF THE OUTER ISOLATION VALVE PER 1-NHY-805111 UNLESS OTHERWISE NOTED.
5. OPERATING BANDS OF THESE CONTROL VALVES ARE ADJUSTED SUCH THAT THESE VALVES ARE CONTROLLED BETWEEN 5 TO 100% OPEN POSITION.
6. △ -INDICATES REVISION LEVEL.
7. DELETED.

FOR P&ID REFERENCE DRAWINGS, SYMBOLS AND ABBREVIATIONS REFER TO DRAWINGS P&ID - LEGEND 1 AND P&ID - LEGEND 2

PORTIONS OF THIS DRAWING ARE
NUCLEAR SAFETY RELATED

REV	DATE	DSGN	CHKD	CE	DESCRIPTION
13	10-3-06	JM	BCS	PES	INCORP MMOD 03-504 DCN 00
12	6/4/03	BCS	JM	TAS	INCORP DCR 00-019 DCN-01
11	10/30/03	BCS	JM	TAS	INCORP DCR 00-019 DCN-00
10	10/16/02	JM	BCS	MPW	INCORP CR* 01-8376 REV 0
9	4/23/92	MRB	BCL	RRB	INCORP MMOD'S 91-511 CA0, 91-515 CA0 & 91-622 CA0
8	10/29/90	MRB	JM	BCL	INCORP. MMOD 90-601 CA 0
7	9/24/90	MRB	JM	BCL	INCORP. MMOD 90-516 CA 0
6	3/22/88	GPM	BCL	RRC	REVISED: NOTES 3 & 4, INST. REFERENCE SIGNAL, VALVE NUMBER. ADDED: CONT DWG NUMBERS & CORD'S. DELETED: NNS-1 CL DESIGNATION.
5	9/15/87	MPW	BCL	RRC	ADDED UNIT 2 PIPING & VALVES PER INSTALLED CONDITIONS & UE&C P&ID 805637
4	6/16/87	MPW	PAL	VWS	INCORP ECA 99/1149548; ADDED FLEX HOSE, VALVES V861 & V862 SHOWN OPEN AND DELETED V8001 &V8002 (N/A I&C VALVES)
3	10/3/86	PAL	MAP	RRC	ADDED 8008 VALVE NO'S & CONT. DWG REF'S REVISED BUILDING BOUNDRY IDENTIFICATION, REVISED PER ERECTION ISO CC-882-06 , DELETED NOTE 7.

REF. DRAWING NO.	REV	TITLE
9763-F-805013	15	C & VCS THER. REGEN. P & ID
9763-F-805016	16	PCCW LOOP B SHT 1 P&ID
9763-F-804982	10	PCCW LOOP B SHT 3 P&I DIAGRAM
9763-F-804987	2	CHEM & VOL CONT SYS-SEAL WTR HT EXCH PID

FPL ENERGY Seabrook Station

PRIMARY COMPONENT COOLING LOOP B DETAIL

PID- 1-CC-B20212

09/19/06

NHY PID:20213.DGN:01

PID- 1-CC-B20213

FOR P&ID REFERENCE DRAWINGS, SYMBOLS AND ABBREVIATIONS REFER TO DRAWINGS P&ID - LEGEND 1 AND P&ID - LEGEND 2

NOTES:

1. WORK THIS DRAWING WITH DRAWINGS 20204 THRU 20215.
2. ALL LINES, EQUIPMENT, COMPONENTS AND INSTRUMENTS HAVE SYSTEM PREFIX 1-CC UNLESS NOTED OTHERWISE.
3. INSTRUMENT REFERENCES
   - (B) FROM BRS-PT-3A DWG. 20858
   - (C) FROM BRS-TE-7A DWG. 20858
   - (D) FROM BRS-TE-15A DWG. 20858
4. VENT & DRAIN CODE BREAKS ARE AT THE DOWNSTREAM END OF THE OUTER ISOLATION VALVE PER 1-NHY-885111 UNLESS OTHERWISE NOTED.
5. UNION OR FLANGED CONNECTION USED FOR PRE-PLANNED MAKEUP STRATEGY. SEE FP59989.

MSE 07-183 (15)

PORTIONS OF THIS DRAWING ARE

NUCLEAR SAFETY RELATED

REV	DATE	DSGN	CHKD	CE	DESCRIPTION
14	1-21-08	GPS	JW	GJY	INCORP MSE 07-183 REV 00
13	10/03/06	JM	BCS	RRB	INCORP MMOD 03-524 DCN 00
12	1/30/03	BCS	JM	TAS	INCORP DCR 00-019 DCN-00
11	12/19/02	JM	BCS	DEA	INCORP CR 02-10595 REV 00
10	5/25/02	JM	MPW	RRB	INCORP MSE 01-2110 REV 00
9	5/2/00	BCS	DWS	MAP	INCORP MMOD 99-574 DCN-00
8	9/28/95	BCL	MPW	RJF	INCORP MMOD 93-544 CA0
7	3/31/93	MRB	BCL	JCM	INCORP MMOD 92-553 CA0
6	4/23/92	MRB	BCL	RRB	INCORP MMOD'S 91-515 CA0 & 91-622 CA0
5	2/27/89	MRB	GPM	RRC	INCORPORATED DCR 88-85 CA0 REVISED: NOTE 4. DELETED: NNS-1 CLASS BOUNDRY ADDED: LOCATION CODES OF ASSOCIATED SYSTEM EQUIPMENT AND SYS. DWG. NO.'S
4	11/14/86	JDM	WRD	RRC	REMOVED SAFETY CLASS BREAKS FROM VENTS & DRAINS DUE TO THE USE OF NOTE 4 REMOVED PIPE SPEC BREAKS. CORRECTED VALVE TYPE. ADDED REF. DWG. & UPDATED REVS., CONT. DWG. COORDS., P&ID LEGEND NOTE.
3	9/12/86	MPW	MAP	RRC	CHANGED V640 & V641 TO GATE VALVES, REVISED PER NCR 73/78148, REVISED SKID PIPING PER FP-51177
2	6/20/86	JDM	DWS	RRC	GENERAL REV & ADDED CODE CLASS BREAK REVD V911 TO GLOBE VALVE
1	2/27/86	TAK	JDM	WFD	ISSUED FOR OPERATIONS
0	10/17/84	GD	RSL	PEF	ISSUED FOR FIELD VERIFICATION

REF. DRAWING NO.	REV	TITLE
9763-F-805612	13	RADIOACTIVE GAS WASTE SYSTEM SHT. 2 P&ID
9763-F-805016	16	PCCW LOOP B-SHT 1 P&I D.
9763-F-805028	14	PCCW LOOP B-SHT 2 P&I D.
9763-F-804982	10	PCCW LOOP B-SHT 3 P&I D.

FPL ENERGY Seabrook Station

PRIMARY COMPONENT COOLING LOOP B DETAIL

PID- 1-CC-B20213

01/22/08

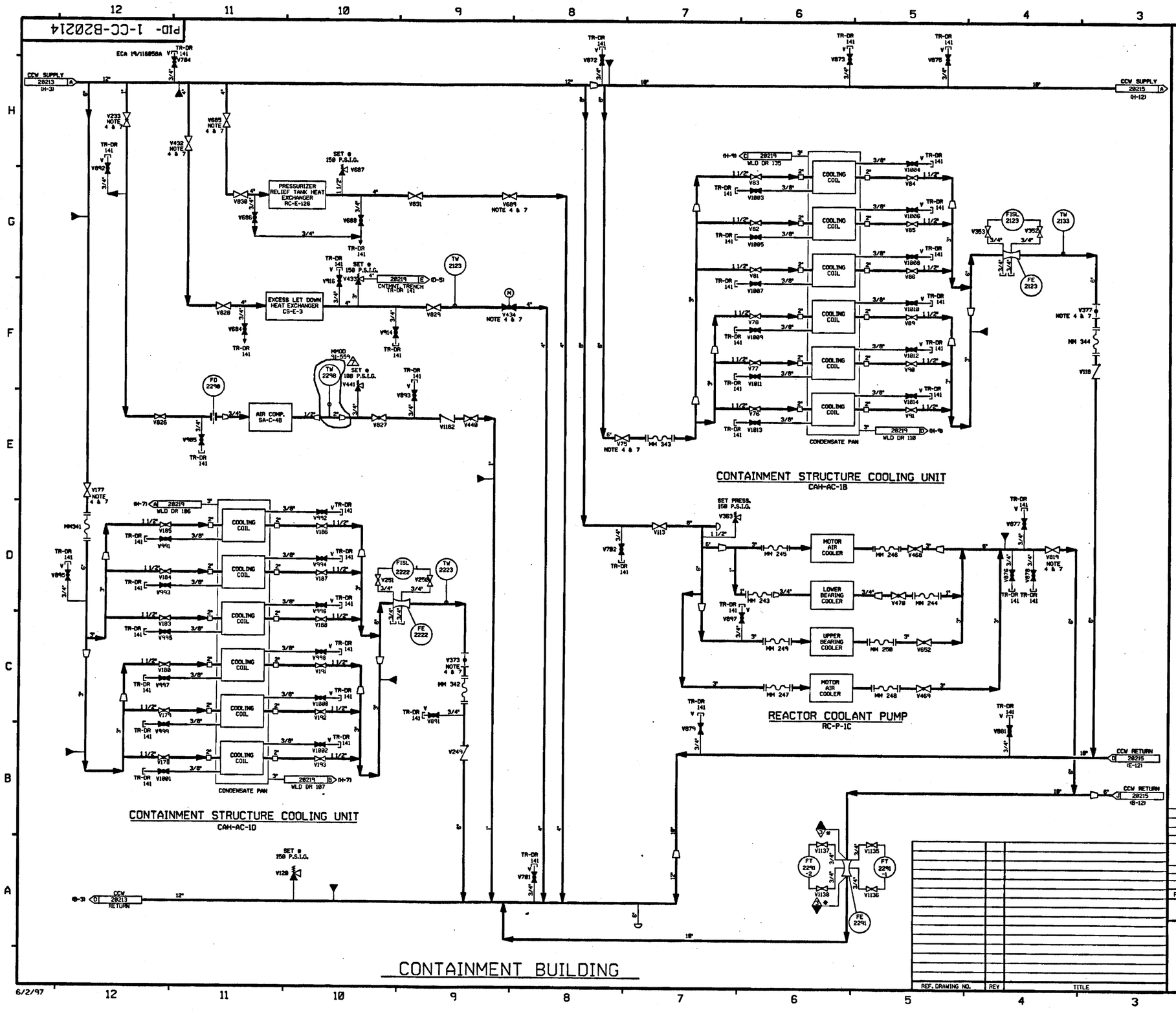

FOR P&ID REFERENCE DRAWINGS, SYMBOLS AND ABBREVIATIONS REFER TO DRAWINGS P&ID - LEGEND 1 AND P&ID - LEGEND 2

NOTES:

1. WORK THIS DRAWING WITH DRAWINGS 20204 THRU 20215.
2. ALL LINES, EQUIPMENT, COMPONENTS, AND INSTRUMENTS HAVE SYSTEM PREFIX 1-CC UNLESS NOTED OTHERWISE.
3. ALL LINES, EQUIPMENT, COMPONENTS, AND INSTRUMENTS ARE SAFETY CLASS N UNLESS NOTED OTHERWISE.
4. EQUIPMENT ISOLATION VALVES INSIDE CONTAINMENT ARE OPERABLE FROM THE CONTAINMENT ANNULUS.
5. VENT & DRAIN CODE BREAKS ARE AT THE DOWNSTREAM END OF THE OUTER ISOLATION VALVE PER DESIGN STANDARD M-001 UNLESS OTHERWISE NOTED.
6. △ INDICATES REVISION LEVEL
7. PORTION OF SYSTEM HAS BEEN DOWNGRADED, HOWEVER PIPING SPECIFICATION HAS BEEN MAINTAINED TO SAFETY CLASS NOMENCLATURE. SOME COMPONENTS WITHIN THE NEW BOUNDARY HAVE BEEN PROCURED TO SAFETY CLASS 3 REQUIREMENTS, BUT USED IN N.N.S. SERVICE.

REV	DATE	DSGN	DRWN	CHKD	CDE	SES	DESCRIPTION
7	6/11/97	MPW	—	DWS	FAC	RRC	INCORP. MMOD 91-559 CA#00
6	4/14/94	BCL	—	MPW	DWS	DMO	INCORP. MMOD 93-517 CA#0
5	10/20/92	BCL	—	MRB	DWS	WFZ	INCORP. MMOD 91-559 CA#0 (PARTIAL)
4	4/13/92	MRB	—	BCL	DWS	JEV	INCORP. MMOD 91-515 CA0
3	12/17/86	MRJ	DWS	PAL	BCL	RRC	ADDED CONT FLAG COORD'S, NOTE 6. REVISED V 441 SET PRESS PER UE&C P&ID. REMOVED CAP PER ERECTION ISO.
2	6/23/86	TAK	UE&C CADD	VNK	JMCS	RRC	PER LATEST P&ID REV.
1	2/27/86	TAK	WES	JDM	DJM	WFD	ISSUED FOR OPERATIONS
0	10/17/84	GD	MRB	RSL	JWK	PEF	ISSUED FOR FIELD VERIFICATION

REF. DRAWING NO.	REV	TITLE

North Atlantic Energy Service Corporation

SEABROOK STATION

PRIMARY COMPONENT COOLING
LOOP B
DETAIL

PID- 1-CC-B20214

PID- 1-CC-B20215

CONTAINMENT STRUCTURE

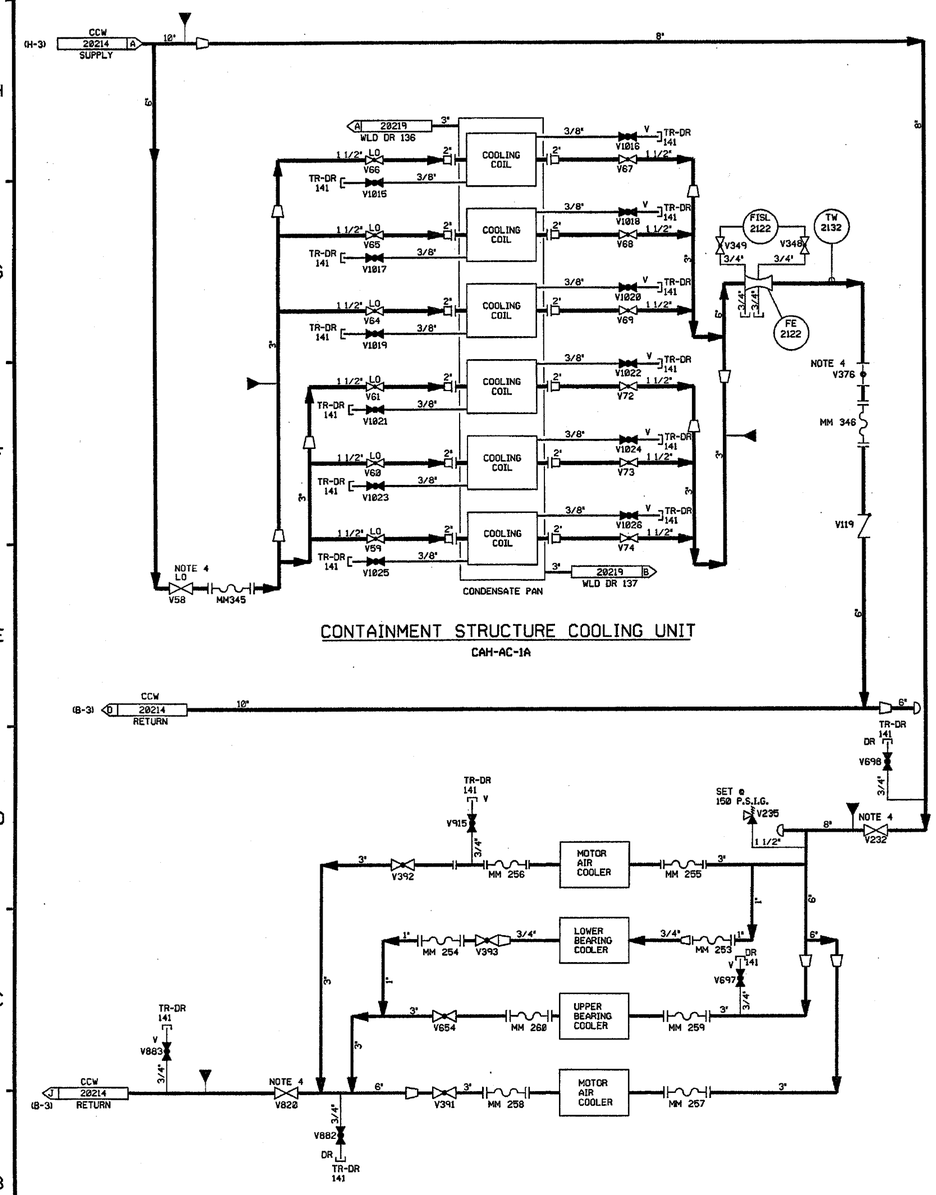

WASTE PROCESSING BLDG.

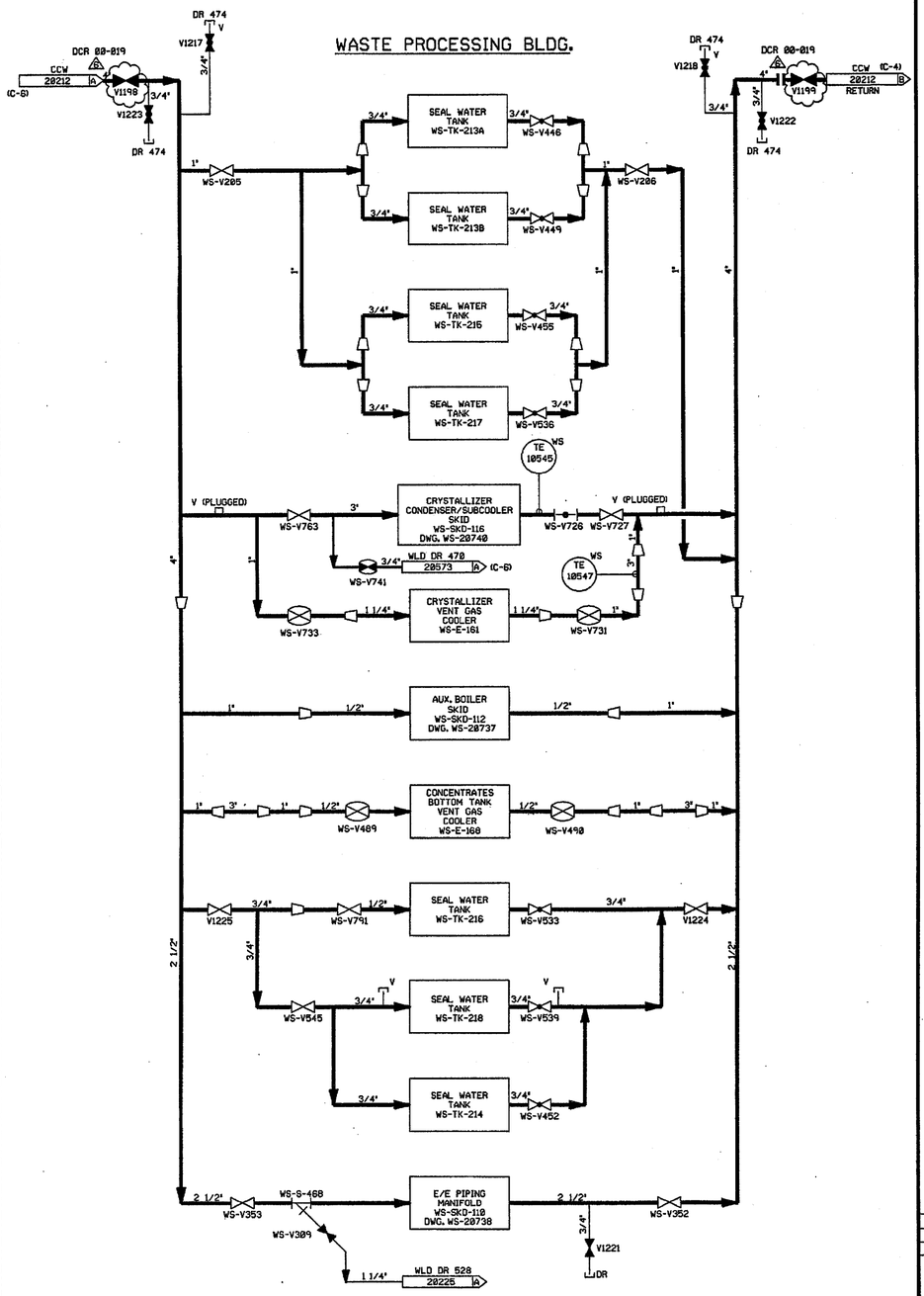

FOR P&ID REFERENCE DRAWINGS, SYMBOLS AND ABBREVIATIONS REFER TO DRAWINGS P&ID - LEGEND 1 AND P&ID - LEGEND 2

NOTES:
1. WORK THIS DRAWING WITH DRAWINGS B20204 THRU B20214.
2. ALL LINES, EQUIPMENT, COMPONENTS, AND INSTRUMENTS HAVE SYSTEM PREFIX 1-CC, UNLESS NOTED OTHERWISE.
3. ALL LINES, EQUIPMENT, COMPONENTS AND INSTRUMENTS ARE SAFETY CLASS N UNLESS NOTED OTHERWISE.
4. EQUIPMENT ISOLATION VALVES INSIDE CONTAINMENT ARE OPERABLE FROM THE CONTAINMENT ANNULUS.
5. DELETED

REV	DATE	DSGN	CHKD	CE	DESCRIPTION
6	1|30|03	BCS	JM	JM	INCORP. DCR 00-019 DCN-00
5	10/31/90	MRB	FCB	JW	INCORP. DCR 87-340 CA 0
4	6/16/87	MPW	PAL	VWS	VALVE WS-V309 SHOWN CLOSED.
3	12/4/86	MPW	WRD	RRC	ADDED CONT REF LOCS, VENTS PER ERECTION ISO, REF DWGS TO SKD-118, SKD-112 & SKD-116. REVISED E-159 TO SKD-112. CHANGED VENT SYMBOL ON VALVE V882 TO DRAIN PER ERECTION ISO. DELETED NOTE 5.
2	6/23/86	TAK	VNK	RRC	TAG NOS. CHANGED FOR TE'S & TI'S & FLANGE ADDED PER P&ID REVIEW.
1	2/27/86	TAK	JDM	WFD	ISSUED FOR OPERATIONS
0	10/17/84	GD	RSL	PEF	ISSUED FOR FIELD VERIFICATION

REF. DRAWING NO.	REV	TITLE
9763-F-805641	3	WS SYS. EXTRUDER P & ID
9763-F-805640	4	WS SYS. ASPHALT & STEAM P & ID
9763-F-805639	4	WS SYS. WASTE FEED & BOTTOMS P & ID
9763-F-805629	3	WS SYS. PUMP SEAL WTR. P & ID
9763-F-805643	3	WS SYS. CRYST. COND. UTIL. P & ID
9763-F-804982	10	PCCW LOOP B SHT. 3 P & ID
9763-F-805028	14	PCCW LOOP B SHEET 2 P&I D

FPL ENERGY Seabrook Station

PRIMARY COMPONENT COOLING LOOP B DETAIL

PID- 1-CC-B20215

01/28/03

PID- 1-DM-B20348

20355

TURBINE BUILDING

20349

AUX. BOILER ROOM

DCR 97-13

CPS SEPARATION TANK CPS-TK-27S 28156

DM SUPPLY UNIT 2

CONDENSATE UNIT 2 STORAGE

WATER TREATMENT ROOM

CPS REGENERATION VESSELS 28157

IONICS LEASED MAKE UP WATER TREATMENT SYS 28036 WT

V504

UV STERILIZER MM-840

ADMIN & SERVICE BLDG

CPS TK-271 28152

SCC WATER HEAD TANK 28072 SCC-TK-24

CAS-TK-125
CAS-TK-126
CAS-TK-127
CAS-SKO-98

CONDENSATE SYSTEM 28428 (C-8)

DCR 84-884

DEMIN WATER HEAT EXCHANGER E-89

DCR 97-13

CPS DEMIN VESSELS 28153

P-419A

P-419B CONDENSATE POLISHER DEMINERALIZED WATER PUMPS

CONDENSER 28429 HOTWELL

P-36B

P-36A DEMIN. WATER TRANSFER PUMPS

SUCTION 28429

CONDENSATE TRANSFER PUMP CO-P-233

28420 DISCHARGE

DEMINERALIZED WATER STORAGE TANK TK-109

DEMINERALIZED WATER STORAGE TANK TK-259

P-395

E-189

CONDENSATE STORAGE TANK CO-TK-25

DIESEL GENERATOR BUILDING

DG-TK-46B 28457

EXPANSION TANKS 28456 DG-TK-46A

CONTROL BLDG

MS & FW PIPE CHASE WEST

FW-E-149

STM. GEN. RECIRC. HEAT EXCH.

20352

20353
20354

MECHANICAL SEAL SUPPLY (MSS)

CONTAINMENT UNIT NO 1

FUEL TRANSFER CONSOLE

FUEL UPENDING MACHINE

20356

PRIMARY AUXILIARY BUILDING

HOSE CONN, RACKS, ETC.

RADIATION MONITERS SKD'S 83, 84, 85, 86, 87

CHILLER SURGE TANK 26728 CS-TK-3

CC HEAD TANK 28284 CC-TK-19A

CC HEAD TANK 28218 CC-TK-19B

LETDOWN DEGASIFIER 28729 CS-TK-84

20351

WASTE PROCESSING BLDG

FUEL STORAGE

20350

NOTES:

1. ALL VALVES, EQUIPMENT, COMPONENTS HAVE SYSTEM PREFIX "DM" UNLESS NOTED OTHERWISE.
2. WORK THIS DRAWING WITH DWG'S 28349, 28358, 28351, 28352, 28353, 28354, 28355 & 28356.
3. △ INDICATES DRAWING REVISION
4. PIPE CAPS MAY BE INSTALLED AT DM WATER HOSE STATIONS AS DEEMED NECESSARY BY STATION STAFF TO PREVENT LEAKAGE.

REF. DRAWING NO.	REV	TITLE
9763-F-885835	9	STM GEN BLOWDOWN EVAP SYS P&ID
9763-F-885632	10	CHEM DR SYS NUCLEAR P&ID
9763-F-885618	10	BORON RECOV SYS PRI DR TK DEGAS P&ID
9763-F-885620	11	LIQUID WASTE SYS EVAP EV-4
9763-F-885615	13	BORON RECOV SYS EVAP EV-3A
9763-F-885837	11	CHEM & VOL CONT SYS LETDOWN DEGAS P&ID
9763-F-884978	4	SAMPLE SYS NUCLEAR POST ACCIDENT
9763-F-884977	8	SAMPLE SYS NUCLEAR SH 2
9763-F-885811	19	CHEM & VOL CONTROL SYS PURIF.
9763-F-885821	12	REACTOR MAKE-UP WATER SYSTEM
9763-F-885627	4	MECH SEAL SUPPLY SYS SH 1
9763-F-282899	12	AUX BLD SYS SH 2
9763-F-282898	18	AUX BLD SYS SH1
9763-F-282894	12	SEC COMP COOLING WATER SH 1
9763-F-282889	11	CONDENSATE CLEAN & CHEM FEED SYS
9763-F-282877	18	CONDENSATE SYSTEM SH 1
9763-F-282112	4	WATER TREATMENT P&ID
9763-F-884988	4	MECH SEAL SUPPLY SYS SH 2 P&ID
9763-F-282879	18	FEEDWATER P&ID
9763-F-282103	15	DIESEL GEN COOLING WATER P&ID
9763-F-884983	4	DEMIN WATER SYS NUCLEAR SH 2 P&ID
9763-F-885838	14	DEMIN WATER SYS, NUCLEAR SHT 1 P&ID
9763-F-282097	12	DEMIN WATER DISTR SYS TURB PLANT P&ID

REV	DATE	DSGN	CHKD	CE	DESCRIPTION
5	4/5/05	BCS	JM	WFZ	INCORP DCR 97-813 DCN 88, 55 & DCR 84-884 DCN 88
4	8/3/94	DWS	BCL	WFZ	INCORP DCR 938887 CA*B
3	9/4/91	MRB	JM	DJM	INCORPORATED DCR 90-23 CAB
2	3/28/87	JDM	MRJ	RRC	INCORP DCR 87-811
1	1/28/87	WDS	WRD	RRC	REVISED PER LATEST SYSTEM DWGS. ADDED NOTE 3.REV'D REF DWG REVISIONS.
0	3/18/86	JDM	DWS	WFD	ISSUED FOR OPERATIONS

FPL ENERGY Seabrook Station

DEMINERALIZED WATER DISTRIBUTION SYSTEM OVERVIEW

PID- 1-DM-B20348

04/02/05

PID- 1-PW-B20914

20916

TOWN & WELL WATER SUPPLY

FIRE PUMPHOUSE

FP TANKS 20204

ASC 20700 BOILER FEED PACKAGE

CONSTRUCTION GATE HOUSE

DCR 960005

OPERATION SUPPORT BUILDING

ENGINEERING OFFICE BUILDING

MMOD 920553

GUARD HOUSE

TO GAH-MH-371 20832 AIR SEPARATOR

20920

H85

CARPENTER SHOP

GENERAL OFFICE BUILDING

MMOD 980516

EQUIP MAIN. BLDG.

20915 A

20915 B

CLEAN ACCESS TUNNEL

RCA TUNNEL

WAREHOUSE NO. 1

20916

UNIT NO. 2 LATER TURBINE BUILDING

DIESEL GEN. BUILDING

CONTROL BUILDING

MM-288 ELECT WTR COOLER

FIRE DEPT

HIGH RISE & TRAINING ANNEX

CHLORINATION BUILDING

MMOD 950630

PIPE SHOP

WELD SHOP

UNIT NO. 2 LATER DIESEL GEN & CONTROL BLDG

UNIT NO. 2 LATER EMERG. FEEDWATER PUMP BLDG

MMOD 928553

CHANGE HOUSE & OFFICE

COMPR. OFFICE

OFFICE TRAILERS

TRAINING CENTER

ELECTRICAL SHOP

20916

TO SANITARY FACILITY

MANHOLE

EDUCATION FACILITY

SERVICE WATER COOLING TOWERS

NOTES:
1. WORK THIS DWG. WITH DWGS. 20915 THRU 20928.
2. ALL LINES, EQUIPMENT, COMPONENTS AND INSTRUMENTS HAVE SYSTEM PREFIX PW UNLESS NOTED.
3. △ INDICATES REVISION LEVEL.

REF. DRAWING NO.	REV	TITLE
9763-F-604462	3	CHLOR BLDG DRNG FIRE PROT & POT WTR
9763-F-604141	13	EMERG FDWTR PUMPHSE FIRE PROT & POT WTR
9763-F-604107	14	DIESEL GEN BLDG DRAINAGE SYS
9763-F-604099	13	CONTROL BLDG STORM, SANITARY, & POT WTR
9763-F-604076	14	POTABLE WATER SYSTEM P&ID
9763-F-604069	18	YARD & FIRE PUMPHOUSE FIRE PROTECTION
9763-F-604059	18	FIRE PUMPHOUSE HTG & VENT PLAN & P&ID

REV	DATE	DSGN	DRWN	CHKD	CDE	SES	DESCRIPTION
2	1/24/01	DWS	—	MW	BCS	WM	INCORP DCR 960005 DCN#00 & 04, MMOD 950630 DCN#00, MMOD 928553 CA#01 & MMOD 980516 CA#0. CHANGED TEST LAB TO FIRE DEPT & CONSTR BLDG TO OSB. ADDED CONN'S FOR THE HI-RISE, TURB-2 & OSB. SIMPLIFIED THE GUARD HOUSE & CONTROL BLDG.
1	1/21/87	WDS	OPD	WRD	BCL	VWS	ADDED NOTE 3. REVISED PER LATEST SYSTEM DRAWINGS.
0	6/18/86	DBF	WES	DWS	DJM	RRC	ISSUED FOR OPERATIONS

North Atlantic Energy Service Corporation

SEABROOK STATION

POTABLE WATER OVERVIEW SH 1

PID- 1-PW-B20914

01/22/01

PID- 1-PW-B20915

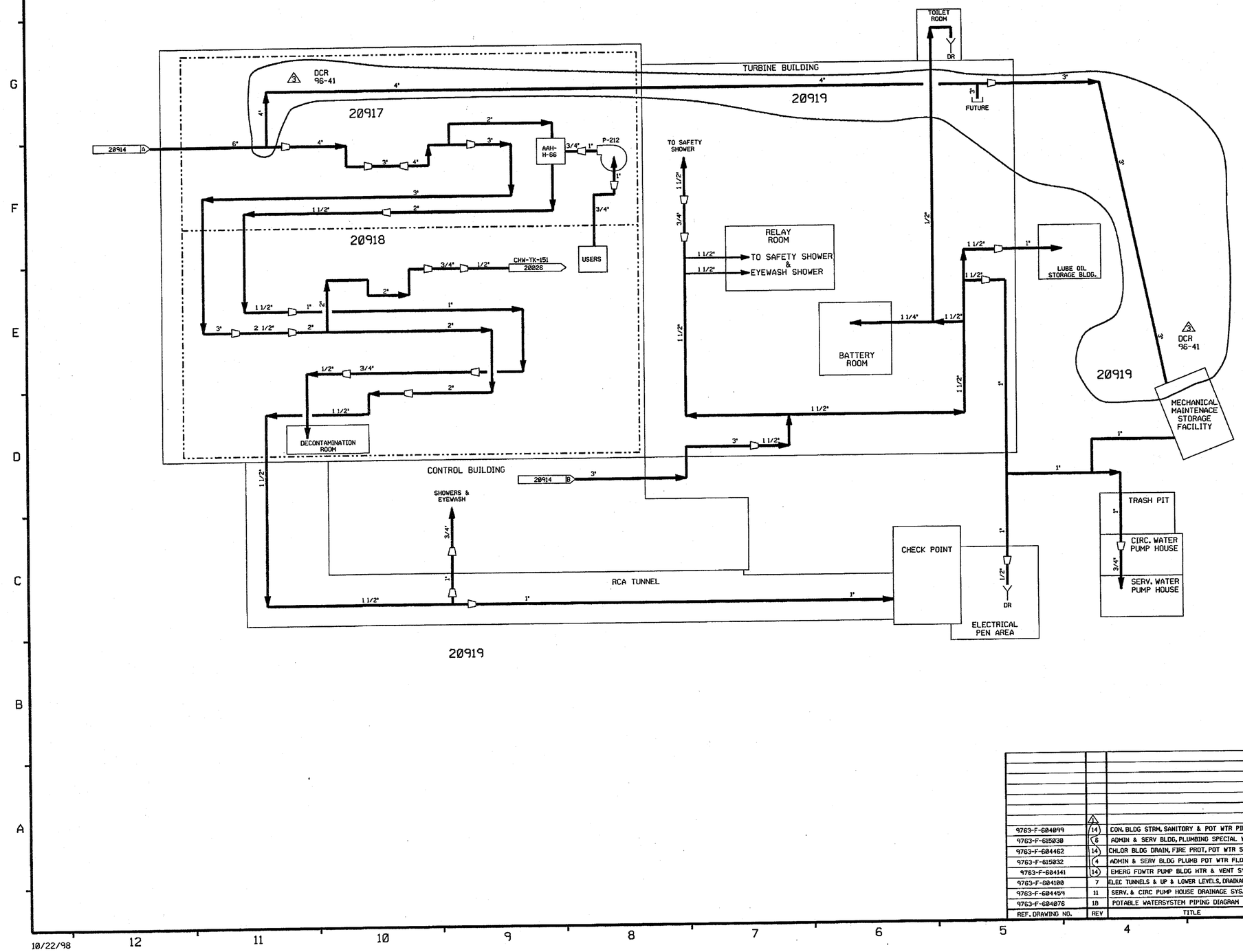

NOTES:

1. WORK THIS DRAWING WITH DRAWINGS 20914, 20916 THRU 20920.
2. ALL LINES, EQUIPMENT, COMPONENT AND INSTRUMENTATION HAVE SYSTEM PREFIX PW, UNLESS NOTED OTHERWISE.
3. △ INDICATES REVISION LEVEL.

REF. DRAWING NO.	REV	TITLE
9763-F-604099	14	CON. BLDG STRM, SANITORY & POT WTR PIPING
9763-F-615030	6	ADMIN & SERV BLDG, PLUMBING SPECIAL WASTE
9763-F-604462	14	CHLOR BLDG DRAIN, FIRE PROT, POT WTR SECT DETAILS
9763-F-615032	4	ADMIN & SERV BLDG PLUMB POT WTR FLOW DIA
9763-F-604141	14	EMERG FDWTR PUMP BLDG HTR & VENT SYS PLANS
9763-F-604100	7	ELEC TUNNELS & UP & LOWER LEVELS, DRAINAGE FIRE PROT.
9763-F-604459	11	SERV. & CIRC PUMP HOUSE DRAINAGE SYS.
9763-F-604076	18	POTABLE WATERSYSTEM PIPING DIAGRAM

REV	DATE	DSGN	DRWN	CHKD	CDE	SES	DESCRIPTION
3	9/17/98	MPW	—	BCS	DWS	GAP	INCORP DCR 96-41 DCN 00
2	08/22/97	DWS	—	MPW	BCS	SNC	INCORP MMOD 950585 CA#6
1	1/29/89	WDS	OPO	WRD	BCL	VWS	ADDED NOTE 3, REVISED PER LATEST SYSTEM DWGS.
0	6/18/86	DBF	MRB	DWS	DJM	ARC	ISSUED FOR OPERATIONS

North Atlantic Energy Service Corporation

SEABROOK STATION

POTABLE WATER OVERVIEW SH 2

PID- 1-PW-B20915

10/22/98

PID- 1-RMW-B20360

TANK FARM | PRIMARY AUXILIARY BLDG. | PENETRATION TUNNEL | CONTAINMENT

FOR P&ID REFERENCE DRAWINGS, SYMBOLS AND ABBREVIATIONS REFER TO DRAWINGS P&ID - LEGEND 1 AND P&ID - LEGEND 2

NOTES:

1. RMW IS A ONE DRAWING SYSTEM, AN OVERVIEW IS NOT REQUIRED.
2. ALL LINES, EQUIPMENT, COMPONENTS AND INSTRUMENTS HAVE SYSTEM PREFIX RMW, UNLESS NOTED OTHERWISE.
3. INSTRUMENTATION REFERENCE SYMBOLS:
   - (A) TO AS-TV-9230 ON DWG. 20571.
   - (B) FROM REACTOR COOLANT MAKE-UP CONTROL
4. V20 INTERNALS HAVE BEEN REMOVED SO THAT V105 CANNOT BE ISOLATED.
5. VALVE V20 IS LOCATED OUTSIDE DIKE.
6. △ - INDICATES REVISION LEVEL.
7. ALL LINES, EQUIPMENT, COMPONENTS AND INSTRUMENTS ARE SAFETY CLASS NNS, UNLESS NOTED OTHERWISE.
8. ALTERNATE FILL PATH FOR THERMAL BARRIER HEAD TANK 1-CC-TK-196 FROM RMW SYSTEM. THIS FILL PATH UTILIZES A REMOVABLE HOSE ASSEMBLY THAT IS INSTALLED, PLACED IN SERVICE AND REMOVED IN ACCORDANCE WITH APPROVED STATION PROCEDURE.

EC-144922 (14)

PORTIONS OF THIS DRAWING ARE

NUCLEAR SAFETY RELATED

REF. DRAWING NO.	REV	TITLE
9763-F-805006	18	RC SYSTEM LOOP 4 P&ID
9763-F-805005	15	RC SYSTEM LOOP 3 P&ID
9763-F-805004	16	RC SYSTEM LOOP 2 P&ID
9763-F-805003	19	RC SYSTEM LOOP 1 P&ID
9763-F-805014	16	CVCS BORIC ACID P&ID
9763-F-805023	13	CONTAINMENT SPRAY SYSTEM P&ID
9763-F-805613	12	SPENT RESIN SLUICING SYSTEM P&ID.
9763-F-805643	3	SOLID WASTES SYS. CRYSTAL. COND/UTILITIES P&ID
9763-F-805260	3	VLV. STEM LEAK-OFF TAB SHT.
9763-F-805021	12	REACTOR MAKE-UP WATER SYS. P & ID.

REV	DATE	DSGN	CHKD	CE	DESCRIPTION
14	12/07/10	GPS	JWL	MJP	INCORP. EC- 144922
13	01/15/01	BCS	MPW	JCM	INCORP. DCR 00-0030 DCN-00
12	5/7/99	DWS	BCS	HWM	INCORP MMOD 970618 DCN#00
11	12/9/94	MPW	BCL	MHO	INCORP. MMOD 93-545 CA0
10	4/14/92	MRB	BCL	JEV	INCORP MMOD'S 91-515 CA0 & 91-622 CA0
9	8/21/91	MRB	JM	PEB	INCORP. DCR 90-7 CA03
8	1/18/90	MRB	GPM	IW	INCORP. DCR 89-83 CA05
7	5/17/89	GPM	MRB	RRC	INCORPORATED MMOD 89-532 CA 01 REVISED: PIPING TO CLARIFY DUPLICATION OF ASSOCIATED SYSTEMS & INTERFACES. NOTE 2 ADDED: NOTE 7 DELETED: SAFETY CLASS DESIGNATION PER NOTE 7
6	4/7/87	MRJ	GPM	VWS	ADDED V49 AND PIPING PER ERECTION ISO'S. REMOVED DUPLICATED PIPING AND EQUIP.
5	10/31/86	JDM	WRD	RRC	ADDED CONTINUATION DRAWING COORD., LEGEND NOTE & REFERENCE DRAWINGS.
4	9/12/86	MPW	MAP	RRC	REVISED PER ERECTION PIPING ISO'S RMW-1135-01, F-870152, F-870153. ADDED CONTINUATIONS & NOTES 5. INCORP ECA 19/3702A.
3	6/27/86	JDM	BCL	RRC	UPDATE PER NEW REF. DWG. REV. INCORP. ECA 19/4127A, ECA 19/16877A INCORP. ECA 05/10663A ADD DWG. REFERENCES
2	5/6/86	DBF	TAK	WFD	REVISED CONTINUATIONS
1	2/5/86	WAL	JDM	WFD	INCORPORATE ECA 99/112679A ISSUE FOR OPERATIONS
0	84/25/85	DSN	JNM	WFD	ISSUED FOR FIELD VERIFICATION

NEXTera ENERGY SEABROOK

SEABROOK STATION

REACTOR MAKE-UP WATER SYSTEM

PID- 1-RMW-B20360

12/07/10

SECURITY-RELATED INFORMATION – WITHHELD UNDER 5 U.S.C. SECTION 552(b)(4) AND 5 U.S.C. SECTION 552(b)(7)(F)

NHY PID20209.DGN

CONTAINMENT BUILDING

CCW RETURN 20207 LOOP A (B-8)

CCW SUPPLY 20207 LOOP A (H-10)

CCW RETURN 20213 LOOP B (B-6)

CCW SUPPLY 20213 LOOP B (H-6)

OUTSIDE CONTAINMENT

INSIDE CONTAINMENT

THERMAL BARRIER HEAT EXCHANGER CC-E-153A SAFETY CLASS 2 & 3

THERMAL BARRIER HEAT EXCHANGER CC-E-153B SAFETY CLASS 2 & 3

THERMAL BARRIER CIRCULATING WATER PUMP CC-P-322B SAFETY CLASS 3

THERMAL BARRIER CIRCULATING WATER PUMP CC-P-322A SAFETY CLASS 3

THERMAL BARRIER RC-P-1B DWG 20842 (E-11)

THERMAL BARRIER RC-P-1C DWG 20843 (B-10)

THERMAL BARRIER RC-P-1A DWG 20841 (E-4)

THERMAL BARRIER RC-P-1D DWG 20844 (B-6)

CONTAINMENT TRENCH A 20219 TR-DR-141

CONTAINMENT TRENCH B 20219 TR-DR-141

CONTAINMENT TRENCH C 20219 TR-DR-141

CONTAINMENT TRENCH D 20219 TR-DR-141

CLOSE ON HIGH FLOW SIGNAL (TYP. 4 PLACES)

SET @ 2500 P.S.I.G.

SET @ 150 P.S.I.G.

CHEM. ADD J V1235

(E-7) 20352 G DEMIN. WATER

RUPTURE DISC 1-CC-MM-763

RUPTURE DISC 1-CC-MM-762

30' DIA.

THERMAL BARRIER LOOP HEAD PIPE SAFETY CLASS 3

NO

FOR P&ID REFERENCE DRAWINGS, SYMBOLS AND ABBREVIATIONS REFER TO DRAWINGS P&ID - LEGEND 1 AND P&ID - LEGEND 2

NOTES:

1. WORK THIS DRAWING WITH DRAWINGS 20204 THRU 20208 & 20210 THRU 20215.
2. ALL LINES, EQUIPMENT, COMPONENTS AND INSTRUMENTS HAVE SYSTEM PREFIX '1-CC' UNLESS NOTED OTHERWISE.
3. PERMANENT SPOOL PIECE INSTALLATION SHOWN. TEMPORARY STRAINER IS USED IN PLACE OF SPOOL PIECE DURING INITIAL FLUSHING OPERATION. STRAINER TO BE REMOVED BEFORE PLANT START-UP.
4. EQUIPMENT ISOLATION VALVES INSIDE CONTAINMENT ARE OPERABLE FROM THE CONTAINMENT ANNULUS.
5. VENT, DRAIN AND TEST CONN. CODE BREAKS ARE AT THE DOWNSTREAM END OF THE OUTER ISOLATION VALVE PER 1-NHY-805111 UNLESS OTHERWISE NOTED.
6. △ -INDICATES REVISION LEVEL
7. ALTERNATE FILL PATH FOR THERMAL BARRIER HEAD TANK 1-CC-TK-196 FROM RMW SYSTEM. THIS FILL PATH UTILIZES A REMOVABLE HOSE ASSEMBLY THAT IS INSTALLED, PLACED IN SERVICE AND REMOVED IN ACCORDANCE WITH APPROVED STATION PROCEDURE.

PORTIONS OF THIS DRAWING ARE

NUCLEAR SAFETY RELATED

REV	DATE	DSGN	CHKD	CE	DESCRIPTION
12	4/19/11	GPS	JWL	DOP	PARTIAL INCORP. EC-145038
11	12/09/10	GPS	JM	MAP	INCORP. EC-144922
10	10/03/06	JM	BCS	RRB	INCORP. MMOD 03-504 DCN 00
9	2/14/02	BCS	MPW	DJM	REINCORP DCR 87-240 CA-07
8	4/22/94	DWS	BCL	DMO	INCORP MMOD 920533 CA#0
7	4/23/92	MRB	BCL	JEV	INCORP. MMOD 91-515 CA0
6	10/29/90	MRB	JM	BCL	ADDED: V395 LABEL INCORP. MMOD 90-106 CA0
5	12/6/88	MRB	GPM	RRC	ADDED: RC PUMP CROSS REF. DWG. NO. DELETED: NNS 1 CLASS BOUNDARY, BREAK FLANGES INCORP. DCR'S 87-82 CA5 AND 87-240 CA7 REVISED: NOTE 5
4	6/16/87	MPW	PAL	VWS	ADDED P&ID REF NOTE; DELETED CODE BREAKS PER NOTE 5, PIPING SPEC'S & SCREEN REF.
3	8/22/86	MPW	DWS	PHH	REINCORP ECA 19/10147A, DELETED CODE & SPEC BREAK SYMBOLS PER NOTE 5, DELETED NOTE 7 AND VALVE DM-V362, SHOWN ON DM P&ID, REVISED NOTE 5, REV PER UE&C P&ID, ADDED DWG LOC COORD.

REF. DRAWING NO.	REV	TITLE
9763-F-804976	10	PCCW THERMAL BARRIER LOOP-P&ID

NEXTera ENERGY SEABROOK

SEABROOK STATION

PRIMARY COMPONENT COOLING THERMAL BARRIER LOOP DETAIL

PID- 1-CC-B20209

03/21/11

PID-B20349

TURBINE BUILDING
UNIT 1

AUX. BOILER ROOM

WATER TREATMENT ROOM

ADMINISTRATION BUILDING

MS & FW PIPE CHANGE

STEAM GENERATOR WET LAYUP SKID CAS-SKD-91

CAS-TK-127 AMMONIUM HYDROXIDE MIXING TANK

CAS-TK-126 HYDRAZINE MIXING TANK

CAS-TK-125 MISC. CHEMICALS MIXING TANK

CAS-TK-139 WET LAYUP CHEMICAL MIXING TANK

CO SYSTEM CHEMICAL FEED SKID CAS-SKD-90

CPS DEMINERALIZED WATER PUMPS

DEMINERALIZED WATER HEAT EXCHANGER

DEMINERALIZED WATER TRANSFER PUMPS
(IN LINE TYPE)

DEMINERALIZED WATER STORAGE TANK TK-109 (200,000 GAL. CAP.)

DEMINERALIZED WATER STORAGE TANK TK-259 (500,000 GAL. CAP.)

E-89 DEMINERALIZED WATER HEAT EXCHANGER

E-189 DEMINERALIZED WATER HEAT EXCHANGER

FLOATING SEAL MM-680

FLOATING SEAL MM-797

MANHOLE

DRAWOFF SUMP

CST EMERGENCY FILL BY FIELD

CIRC WATER PUMP HSE

UNDERGROUND

SET @ 150 PSIG

SEE NOTE 9.

FOR P&ID REFERENCE DRAWINGS, SYMBOLS AND ABBREVIATIONS REFER TO DRAWINGS P&ID - LEGEND 1 AND P&ID - LEGEND 2

NOTES:

1. WORK THIS DRAWING WITH DRAWINGS 20348 & 20350 THROUGH 20356.
2. ALL LINES, EQUIPMENT, COMPONENTS & INSTR. ARE SYSTEM PREFIX 'DM' UNLESS OTHERWISE NOTED.
3. ALL LINES, EQUIPMENT, COMPONENTS & INSTR. ARE SAFETY CLASS NNS, UNLESS NOTED OTHERWISE.
4. △- DENOTES REVISION LEVEL.
5. DELETED
6. INSTRUMENT REFERENCES
   - (A) TO AS-TCV-3470 ON DWG. 20568.
   - (C) TO SCC-LC-7001 ON DWG. 20074.
   - (D) TO DM-TCV-3475 ON DWG. 20568
7. CAUTION TO BE EXCERCISED WHEN THROTTLING THIS VALVE TO REDUCE THE CONTINUOUS RECIRC FLOW IF STEAM IS AVAILABLE FOR HEAT EXCHANGER E-89. THERMAL CONDITIONS TO BE MONITORED TO ASSURE NO ADVERSE CONDITIONS EXIST.
8. PIPE CAPS MAY BE INSTALLED AT DEMIN WATER HOSE STATIONS AS DEEMED NECESSARY BY STATION STAFF TO PREVENT LEAKAGE.
9. THIS HEAT TRACING IS NONFUNCTIONAL.

PORTIONS OF THIS DRAWING ARE
NUCLEAR SAFETY RELATED

REV	DATE	DSGN	CHKD	CE	DESCRIPTION
31	3-16-07	BCS	JWL	EEB	INCORP MSE 06-132 REV. 0
30	4/27/06	JM	BCS	DMQ	INCORP MMOD 01-501 DCN 00
29	4/20/05	BCS	JM	PAL	INCORP. DCR 97-13 DCN 00, 55, 144, 180 & 201 INCORP. DCR 04-004 DCN 00 & 06
28	1/24/05	JM	BCS	RRB	INCORP CR 05-00453 REV. 00
27	11/18/04	JM	BCS	DJM	PARTIAL INCORP DCR 04-004 DCN 00
26	10/28/04	BCS	JM	RRB	INCORP CR 04-09047 REV. 0
25	2/28/03	BCS	JM	MRB	INCORP MSE 01-0306 REV. 0
24	10/1/02	JM	BCS	MPW	INCORP CR 01-04634 REV 00 & ECA 99/117432A
23	3/14/02	JM	MPW	BCS	REINCORP MMOD 00-0534 DCN 00 AND CR 02-02972 REV 01
22	11/2/01	BCS	JLS	MPW	INCORP MSE 01-0271 REV. 0
21	10/23/01	BCS	MPW	GRM	INCORP MMOD 00-534 DCN-00
20	9/22/98	BCS	MPW	RSG	INCORP MMOD 96-636 DCN-00
19	6/9/98	BCS	MPW	RSG	PARTIAL INCORP MMOD 96-636 DCN-00
18	5/22/98	BCS	DWS	RSG	REINCORP MMOD 96-636 DCN 00-PARTIAL
17	5/20/98	DRL	BCS	RSG	INCORP MMOD 96-636 DCN 00
16	7/30/97	MPW	BCS	VWS	INCORP MMOD 96-550 DCN 01
15	11/20/96	MPW	BCS	DJM	INCORP DCR 95-038 DCN 0, 02 & 04
14	10/23/95	MPW	DWS	MPW	INCORP MMOD 95-625 CA0
13	10/23/95	BCL	MPW	GRM	INCORP DCR 94-027 CA-0
12	8/3/94	DWS	BCL	WFZ	INCORP DCR 930007 CA*1
11	5/9/94	BCL	JWB	HWM	INCORP. MMOD 94-519 CA0
10	3/31/93	MRB	BCL	JCM	INCORP. MMOD 92-553 CA0

REF. DRAWING NO.	REV	TITLE
9763-F-202093	10	CONDENSER AIR EVACUATION SYS P&ID
9763-F-202077	18	CONDENSATE SYSTEM SH 1 OF 2 P&ID
9763-F-202094	12	SEC COMP COOLING WATER SH 1 OF 2 P&ID
9763-F-202089	11	CONDENSATE CLEANING & CHEM FEED SYSTEM
9763-F-202097	12	DEMIN WTR DISTR SYSTEM TURBINE PLNT.
9763-F-805030	14	DEMIN WATER SYSTEM NUCLEAR SH 1

FPL ENERGY Seabrook Station

DEMINERALIZED WATER DISTRIBUTION SYSTEM TURBINE BLDG

PID- 1-DM-B20349

03/12/06

NHY PID:20636.DGN:1

FOR P&ID REFERENCE DRAWINGS, SYMBOLS AND ABBREVIATIONS
REFER TO DRAWINGS P&ID - LEGEND 1 AND P&ID - LEGEND 2

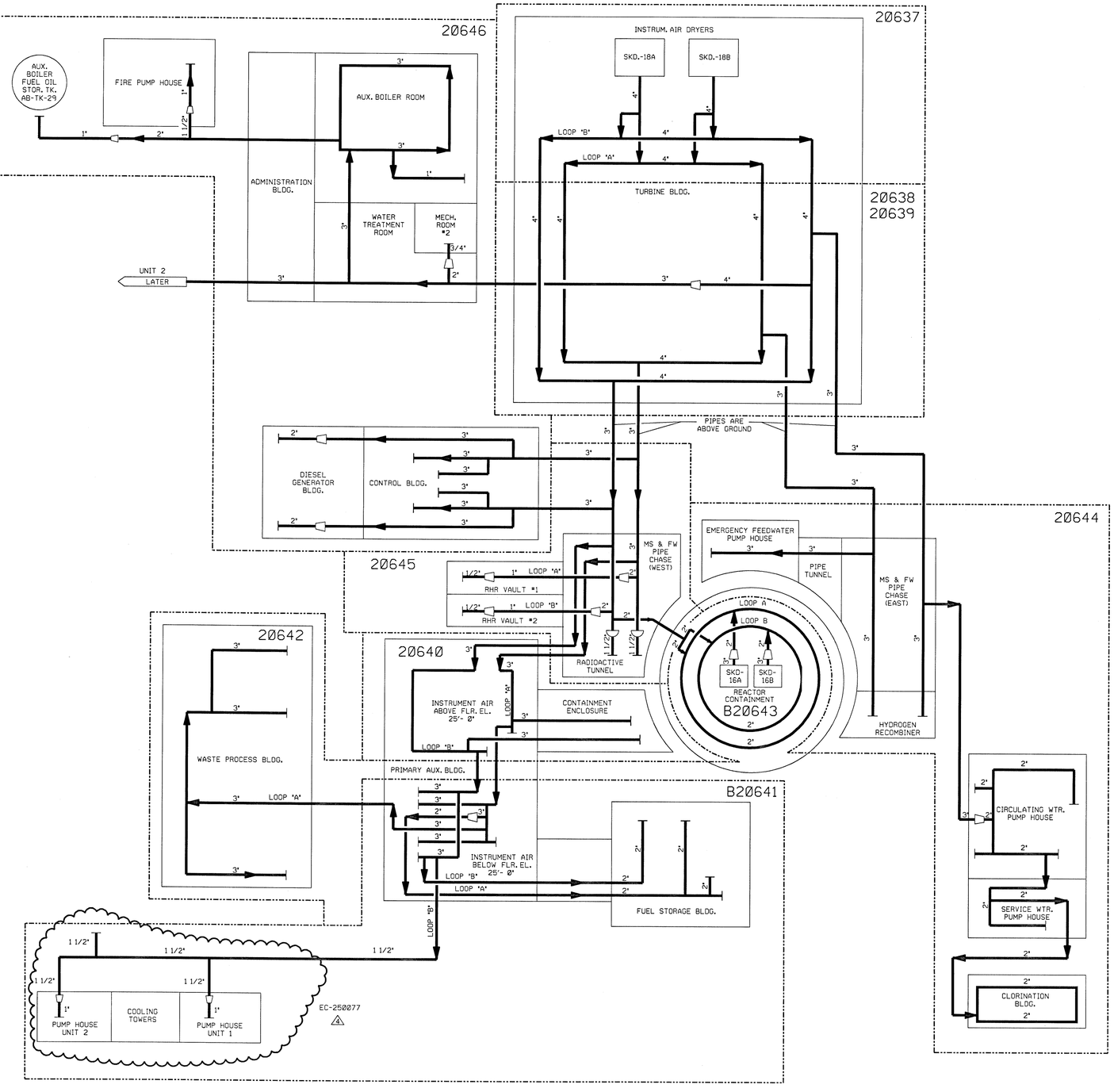

NOTES:

1. ALL LINES, EQUIPMENT, COMPONENTS, AND INSTRUMENTS HAVE SYSTEM PREFIX 1A, UNLESS NOTED OTHERWISE.
2. WORK THIS DRAWING WITH DRAWINGS 20637 THRU 20646
3. ALL PIPING RUNNING BETWEEN BUILDINGS IS UNDERGROUND EXCEPT AS NOTED.
4. △ INDICATES REVISION LEVEL.

REV	DATE	DSGN	CHKD	CE	DESCRIPTION
4	11\10\10	GPS	BCS	JML	INCORP EC-250277
3	10/27/03	JM	MPW	RRB	INCORP DCR 90-004 CA 00 PER CR 03-00510 REV00
2	1/18/90	MRB	GPM	GRM	INCORPORATED DCR 86-320 CA REVISED NOTE 1, DRAWING ENHANCEMENTS ADDED: REF DWG. NOTE
1	1/21/87	MPW	WRD	VWS	REVISED PER LATEST SYSTEM DRAWINGS & ADDED NOTE 4.
0	4/25/86	DBF	JDM	WFD	ISSUED FOR OPERATIONS

REF. DRAWING NO.	REV	TITLE
9763-F-202109	9	MISC BLDGS COMP AIR HDRS P&ID
9763-F-202107	12	TURB BLDG COMP AIR HDRS P&ID
9763-F-202106	11	COMPRESSED AIR SYS. P & ID
9763-F-202108	15	MISC. BLDGS. COMP. AIR HEADER SH. 1 OF 2
9763-F-202105	11	COMPRESSER AIR SYSTEM KEY PLAN

NEXTera ENERGY SEABROOK

SEABROOK STATION

INSTRUMENT AIR OVERVIEW

PID- 1-IA-B20636

11/04/10

PID- 1-IA-B20637

FOR P & ID REFERENCE DRAWING SYMBOLS AND ABBREVIATIONS
REFER TO DRAWINGS P & ID-LEGEND 1 AND P & ID-LEGEND 2

NOTE:
1. ALL LINES, VALVES, EQUIPMENT, COMPONENTS AND INSTRUMENTS HAVE SYSTEM PREFIX IA, UNLESS NOTED OTHERWISE.
2. WORK THIS DRAWING WITH DRAWINGS 20636 AND 20638 THRU 20646.
3. ☐ DENOTES DUAL AIR FILTER.
4. ALL LINES, VALVES, EQUIPMENT, COMPONENTS AND INSTRUMENTS ARE SAFETY CLASS NNS.
5. P&ID SHOWN FOR INSTR. AIR DRYERS 18A & B DEPICTS AIR SIDE ONLY. FOR REFRIGERATION SIDE OF DRYERS REFER TO FP20420.
6. INSTRUMENTATION ON THIS DWG DOWNSTREAM OF THE PIPING ROOT VALVE CONNECTIONS HAS NOT BEEN FIELD VERIFIED; EXCEPT V447, V448, V446, V117, V156, V121, V119, & SUPPLY TO IA-MM-759.
7. △ INDICATES REVISION LEVEL
8. VALVE SYMBOL MAY NOT BE REPRESENTATIVE OF INSTALLED COMPONENT TYPE, REFER TO VALVE LIST.

REV	DATE	DSGN	CHKD	CE	DESCRIPTION
19	6/5/08	JM	GPS	DEA	INCORP DCR 04-011 DCN 00 & MSE 08-017 REV 00
18	11/30/05	JM	BCS	DEA	INCORP CR 05-09387 REV 00, REINCORP DCR 92-004 CA00
17	4/19/05	BCS	JM	PAL	INCORP DCR 97-13 DCN 50, 55, 174
16	12/17/02	BCS	JM	MKC	INCORP DCR 00-0014 DCN-00, 01, 02, 07
15	10/31/02	BCS	MPW	MKC	INCORP DCR 00-0014, DCN-11
14	10/04/02	BCS	MPW	MKC	PARTIAL INCORP DCR 00-0014, DCN-00
13	9/30/02	BCS	MPW	MKC	PARTIAL INCORP DCR 00-0014, DCN-00
12	8/21/02	BCS	MPW	MKC	PARTIAL INCORP DCR 00-0014, DCN-00
11	5/22/01	BCS	MPW	MKC	INCORP ECA 99/117267B
10	6/15/00	BCS	MPW	JCM	INCORP DCR 98-41 DCN-00
9	6/16/97	MPW	DWS	DJM	REINCORP DCR 930016 CA*1
8	1/31/96	BCS	MPW	RSG	INCORP MMOD 95-570 CA-0
7	3/24/94	DWS	BCL	WFZ	INCORP DCR 930016 CA*1
6	11/18/92	MRB	DWS	IW	INCORP DCR 92-004 CA0
5	10/29/90	MRB	DSB	BCL	INCORP.: MMOD 90-601 CA00
4	8/11/88	GPM	APL	RRC	INCORP.;DCR 86-341CA4; REVISED: NOTE 6 ADDED; DISCIPLINE BOUNDARY
3	12/28/87	MPW	BCL	DJM	INCORPORATE; DCR 87-371 REVISED: NOTE A.
2	10/28/87	MAP	BCL	RRC	INCORP ECA 99/117378C, PROVIDED LINE SIZES FOR SKID PIPING, ADDED COUPLINGS, FLANGES & MISC. ITEMS PER F.P. ADDED CONTINUATION FLAG COORDINATES. ADDED NOTES 5,6 & 7.
1	6/27/86	JDM	WRD	RRC	FLANGES ADDED, V449 RELOCATED PER NHY WALKDOWN. ADDED LINE SIZES TO SKID PIPING, ADDED REF. DWGS.
0	4/25/86	DBF	VNK	WFD	ISSUED FOR OPERATIONS

REF. DRAWING NO.	REV	TITLE
FP-20420	8	AIR DRYER-REFRIG SCHEM DIAG
FP-20422	10	DRYER AIR FLOW DIAGRAM
FP-20148	5	DRYER ARRANGEMENT DRAWING
9763-M-506708	4	IA-SKD-18B CONTROL LOOP DIAGRAM
9763-M-506707	4	IA-SKD-18A CONTROL LOOP DIAGRAM
9763-F-202106	11	TURB BLDG COMP AIR SYS P&ID
9763-F-500322-2	9	TURB. BLDG. IA DISTR. P&ID.
9763-F-500322-1	11	TURB. BLDG. IA DISTR. P&ID.
9763-F-202107	12	TURB. BLDG. COMP. AIR HDRS. P&ID.

FPL ENERGY Seabrook Station

INSTRUMENT AIR
TURBINE BUILDING
DETAIL

PID- 1-IA-B20637

06/04/08

PID- 1-IA-B20638

TURBINE BUILDING

LOOP B
MM-IR-76
MS-PV-RSLLV-2
MS-PV-RSHLV-2
MD-CP-554C
LOOP A
MM-IR-77
MS-PV-RSLLV-1
MS-PV-RSHLV-1
SCC-LC-7001
MD-CP-554A
(SEE NOTE 3) V151
V144 (SEE NOTE 3)
V152
(H-3) LOOP A 20637 A
(H-4) E 20645 MS & FW PIPE CHASE (WEST)
(H-8) 20639 A V194
V328
V329
V330
DUAL FILTER (TYP.)
V169
V154
V311
V310
V309
V308
V149
V139
V307
V147
V262
V145
V142
MD-LV-3211
MD-LV-3201
MD-LV-3216
MD-LV-3206
HD-LV-4493
HD-CP-598
HD-LV-4492
HD-LV-4455
HD-LV-4456
HD-LV-4457
TSI-PV-WSV
LO-PY-TG
TSI-TT-3922
TSI-TT-3923
TSI-TT-3924
MS-PV-3067
AR-FV-5004-1
MS-V-185
ASH-TIC-5206
ASH-TCV-5206
CAS-IR-75
MS-PY-3009
MS-PY-3009-1
MS-PY-3009-C
MS-PY-3009
MS-PY-3010-1
MS-PY-3010-C
MS-PY-3010
MS-PY-3010
MS-PY-3013
FW-FY-4065
FW-FY-4065
MS-PY-3014
MS-PY-3014-C
PY-3014-1
PY-3014
MS-PY-3013-C
PY-3013-1
PY-3013
MS-PY-3017
MS-PY-3017-1
MS-PY-3017-C
MS-PY-3017
MS-PY-3018
MS-PY-3018
MS-PY-3018-C
MS-PY-3018-1
FW-FY-4064
FW-FY-4064
HD-CP-548
HD-CP-549
SCC-TY-7029
SCC-TIC-7029
MM-IR-34
HD-CP-608
HD-CP-607
HD-CP-606
MD-LY-3200
MD-LY-3205
MD-LY-3210
MD-LY-3215
AS-PCV-9014
HD-CP-599
HD-CP-550
V469
V459
V450
V464
V472
V460
V461
V462
BY PIPING
BY I&C (TYP)
LOOP B
V458
SB-PCV-1926-1
SB-PY-1926-1
V653
1/4" T
TO MM-IR-47 E 20637 (G-3)
V457
1/2" T
V456
V1506
V466
V1507
V470
V366
V1505
V451
V452
V453
V454
V471
CW-FY-35
CW-FY-41
CW-FY-36
CW-FY-42
CW-FY-37
CW-FY-43
CO-PCV-4175
CO-PIC-4175
MD-LY-3208-1
MD-LY-3205-1
MD-LY-3218-1
MD-LY-3215-1
MS-PY-3011
MS-PY-3011-1
MS-PY-3011-C
MS-PY-3011
TAH-FY-1A
TAH-FY-1B
TAH-FY-1C
TAH-FY-1D
TAH-FY-1E
TAH-FY-1F
TAH-FY-1G
TAH-FY-1H
MS-PY-3012
MS-PY-3012
MS-PY-3012-1
MS-PY-3012-C
MS-PY-3015
MS-PY-3015
MS-PY-3015-1
MS-PY-3015-C
HD-CP-547
HD-LV-4439
HD-LV-4418
HD-LV-4438
MS-PY-3019
MS-PY-3019-1
MS-PY-3019-C
MS-PY-3019
MS-PY-3016
MS-PY-3016
MS-PY-3016-1
MS-PY-3016-C
HD-LV-4416
HD-LV-4417
HD-LV-4437
MS-PY 3020
MS-PY-3020
MS-PY-3020-1
MS-PY-3020-C
HD-CP-545
HD-CP-546
(H-8) G 20644 MS & FW PIPE CHASE (EAST)
V161
V128
V130
V133
V136
V371
V373
V140
V71 (SEE NOTE 9)
V331
V367
15 EC 249601
V254 (SEE NOTE 3)
V132 (SEE NOTE 3)
LOOP A
LOOP B
MS-PV-RSLLV-3
MS-PV-RSHLV-3
MS-IR-78
MD-CP-554D
MS-PV-RSHLV-4
MS-PV-RSLLV-4
MM-IR-79
MD-CP-554B

FOR P&ID REFERENCE DRAWINGS, SYMBOLS AND ABBREVIATIONS REFER TO DRAWINGS P&ID - LEGEND 1 AND P&ID - LEGEND 2.

NOTES:

1. ALL LINES, VALVES, EQUIPMENT, COMPONENTS AND INSTRUMENTS HAVE SYSTEM PREFIX IA, UNLESS NOTED OTHERWISE.
2. WORK THIS DRAWING WITH DRAWINGS 20636, 20637 & 20639 THRU 20646.
3. THE FOLLOWING VALVES ARE FOR SERVICING THE OPERATING FLOOR, V-254, V-132, V-144 & V-151.
4. ☐ DENOTES DUAL AIR FILTER
5. ALL LINES, VALVES, EQUIPMENT, COMPONENTS AND INSTRUMENTS ARE SAFETY CLASS NNS, UNLESS NOTED OTHERWISE.
6. INSTRUMENTATION ON THIS DWG. DOWNSTREAM OF THE PIPING ROOT VALVE CONNECTION HAS NOT BEEN FIELD VERIFIED; EXCEPT SUPPLY TO IA-MM-760.
7. SYSTEM DESCRIPTION IS SD-4.
8. VALVE SYMBOL MAY NOT BE REPRESENTATIVE OF INSTALLED COMPONENT TYPE, REFER TO VALVE LIST.
9. INTERNALS OF IA-V71 HAVE BEEN REMOVED AND VALVE IS NON-FUNCTIONAL.

REV	DATE	DSGN	CHKD	CE	DESCRIPTION
15	10/21/10	GPS	JM	BCS	INCORP. EC 249601
14	11/30/05	JM	BCS	DEA	INCORP. CR 05-09387 REV. 00 & DWG 202294 REV 5 AND MSE 05-208 REV 00; REINCORP DCR 92-004 CA00
13	2/18/05	BCS	JM	RRB	INCORP. CR 03-06014 REV. 00
12	12/17/02	BCS	JM	MKC	INCORP. DCR 00-014 DCN-02
11	6/19/97	MPW	DWS	RSG	INCORP. DCR 94-03 DCN 07
10	6/18/97	MPW	DWS	GRM	INCORP. DCR 95-39 CA 29 & 46
9	1/31/97	BCS	DWS	RSG	INCORP. MMOD 95-570 CA-0
8	12/2/95	BCL	MPW	RJF	REINCORP. DCR 91-12 CA0 & 95-39 CA 0
7	11/10/92	MRB	DWS	IW	INCORP. DCR 92-4 CA0
6	9/9/92	MRB	DWS	IW	INCORP. DCR 91-6 CA0
5	4/28/92	DWS	BCL	RSG	INCORP. MMOD 900616 CA0
4	10-10-91	MRB	JM	IW	PARTIAL INCORP. OF DCR 91-6 CA0
3	8/29/89	MRB	BCL	IW	INCORPORATED DCR 89-31 CA 0
2	8/11/88	GPM	APL	RRC	INCORP; DCR 86-341CA4 & DR 82-189A REVISED; NOTE 5 & 6, ADDED; DISCIPLINE BOUNDARY
1	10/24/86	MRJ	WRD	PHH	REVISED REF. DOC'S, & DRAFTING ERRORS ADDED NOTES 6 & 7
0	4/25/86	DBF	JDM	WFD	ISSUED FOR OPERATIONS

REF. DRAWING NO.	REV	TITLE
9763-F-202107	12	TURB BLDG COMP AIR HORS P&ID
9763-F-500322-1	13	TURB BLDG IA DISTRIB. P&ID
9763-F-500322-2	10	TURB. BLDG. IA DISTR. PID

NEXTera ENERGY SEABROOK

SEABROOK STATION

INSTRUMENT AIR TURBINE BUILDING DETAIL

PID- 1-IA-B20638

09/22/10

NHY PID:20638.DGN:1

NHY PID:20639.DGN:1

FOR P&ID REFERENCE DRAWINGS, SYMBOLS AND ABBREVIATIONS
REFER TO DRAWINGS P&ID - LEGEND 1 AND P&ID - LEGEND 2

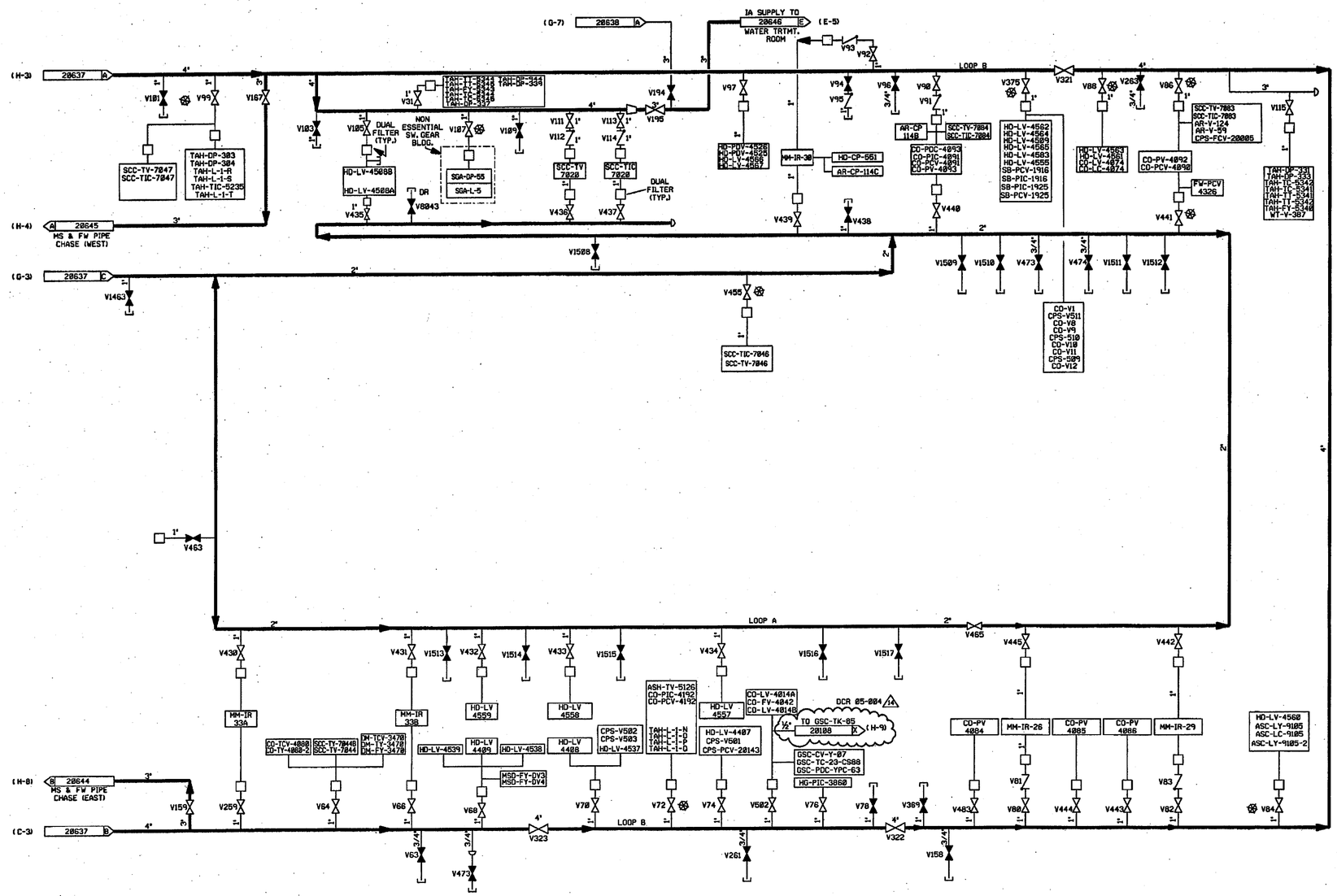

NOTES:

1. ALL PIPING, VALVES, EQUIPMENT, COMPONENTS, AND INSTRUMENTS HAVE SYSTEM PREFIX IA, UNLESS NOTED OTHERWISE.
2. WORK THIS DRAWING WITH DRAWINGS 20636 THRU 20638, & 20640 THRU 20646.
3. ☐ DENOTES DUAL AIR FILTER.
4. ALL PIPING, VALVES, EQUIPMENT, COMPONENTS, AND INSTRUMENTS ARE SAFETY CLASS NNS, UNLESS NOTED OTHERWISE.
5. DELETED
6. △ INDICATES REVISION LEVEL
7. VALVE SYMBOL MAY NOT BE REPRESENTATIVE OF INSTALLED COMPONENT TYPE, REFER TO VALVE LIST.
8. ⊛ INDICATES INSTRUMENTATION DOWNSTREAM OF PIPING ROOT VALVE HAS BEEN VERIFIED. SEE INSTRUMENT AIR DETAIL DRAWING 1-NHY-652007.

REV	DATE	DSGN	CHKD	CE	DESCRIPTION
14	10/11/06	BCS	JM	WD	INCORP OCR 85-084 DCN-01
13	4/22/05	BCS	GPS	PAL	INCORP. DCR 97-13 DCN-00, 58, DCR 02-016 DCN-12, DCR 02-015 DCN-00
12	2/18/05	BCS	JM	RRB	INCORP. CR 03-00747, 03-00749, 03-05014, 03-04137, 03-06016, 05-01952
11	2/7/05	BCS	JM	PAL	INCORP DCR 97-13, DCN-124
10	11/11/00	MPW	DWS	STB	INCORP MM00 99-511 DCN 00 7 06
9	6/18/97	MPW	DWS	GRM	INCORP MM00 96-559 DCN 01, DCR'S 92-59 CA 8, 95-39 CA 23 & DCN
8	1/31/96	BCS	MPW	RSG	INCORP MM00 95-578 CA0
7	11/6/92	MRB	BCL	RSG	INCORP DCR 92-28, CA-06 AND DCR 91-40 CA01
6	11/21/90	WDS	RRC	BEB	INCORP DCR 90-027 CA02
5	10/12/90	MRB	FCB	ES	INCORP DCR 87-138 CA0
4	3/31/90	MRB	HP	RRC	INCORP DCR 90-9 CA0 DELETED: NOTE 5
3	12/29/89	MRB	HP	WFD	INCORP. MM00 89-546 CA02 REVISED NOTE 4
2	11/26/86	WDS	WRD	RRC	REMOVED CHANGE ITEM 1 PER ASBUILT CONDITION; REMOVED CHG ITEM 2-DETAIL WAS FOR UNIT 2 ONLY. REVISED DRAFTING ERRORS. REINSTATED V-455 PER DR 82/189A (DCN 0) CONT DWG REF COORD. & NOTE 5 & 6.
1	6/23/86	CB	VNK	RRC	REVISED PER DR 82/189A
0	4/25/86	CB	JDM	WFD	ISSUED FOR OPERATIONS

REF. DRAWING NO.	REV	TITLE
9763-F-202107	12	TURBINE BUILDING COMP AIR HDRS P & ID
9763-F-500322-2	10	TURBINE BUILDING IA DISTR. PID.

FPL ENERGY Seabrook Station

INSTRUMENT AIR
TURBINE BUILDING
DETAIL

PID- 1-IA-B20639

10/16/06

PID- 1-IA-B20640

PRIMARY AUXILIARY BUILDING

FOR P&ID REFERENCE DRAWINGS, SYMBOLS AND ABBREVIATIONS REFER TO DRAWINGS P&ID-LEGEND 1 AND P&ID-LEGEND 2.

NOTES:

1. WORK THIS DRAWING WITH DRAWINGS 20636 THRU 20639 & 20641 THRU 20646.
2. ALL LINES, EQUIPMENT, COMPONENTS, AND INSTRUMENTS HAVE SYSTEM PREFIX IA, UNLESS NOTED OTHERWISE.
3. □ DENOTES DUAL AIR FILTER.
4. ALL LINES, EQUIPMENT, COMPONENTS, AND INSTRUMENTS ARE SAFETY CLASS NNS UNLESS NOTED OTHERWISE.
5. INSTRUMENTATION ON THIS DWG DOWNSTREAM OF PIPING ROOT VALVE CONNECTIONS HAS NOT BEEN VERIFIED.
6. △ INDICATES REVISION LEVEL.
7. DELETED
8. DELETED.
9. VALVE SYMBOL MAY NOT BE REPRESENTATIVE OF INSTALLED COMPONENT TYPE, REFER TO VALVE LIST.

PORTIONS OF THIS DRAWING ARE

NUCLEAR SAFETY RELATED

REV	DATE	DSGN	DRWN	CHKD	CDE	SES	DESCRIPTION
15	6/11/02	BCS	—	JM	—	MAP	INCORP DCR 00-0028 DCN 00
14	12/2/00	MPW	—	MRB	JPS	JPS	INCORP MMOD 00-527 DCN 00
13	11/2/00	MPW	—	BCS	MRB	RPN	INCORP DCR 99-18 DCN 00
12	2/28/96	DWS	—	BCS	MPW	VWS	INCORP MMOD 940574 CA#0
11	1/31/96	BCS	—	MPW	DWS	RSG	INCORP MMOD 95-578 CA#0
10	6/12/95	BCL	—	DWS	MPW	DJM	INCORP MMOD 94-578 CA#0
9	12/9/94	DWS	—	BCL	MPW	MHO	INCORP MMOD 930545 CA#0
8	6/3/94	DWS	—	BCL	MPW	IW	INCORP MMOD 940505 CA#0
7	10/9/91	GPM	FCB	JM	MRB	RWM	INCORP. DCR 90-32 CA#15
6	9/29/89	MRB	FCB	PAL	MPW	RRC	INCORP. DCR 88-12 CA#8
5	5/24/89	MRB	FCB	GPM	PAL	RRC	INCORP. DCR 87-264 CA #9 REVISED: NOTE 2,3 & 4
4	12/17/88	JDM	TAK	PAL	BCL	RRC	INCORP ECA 05/118518A
3	11/21/86	JDM	TAK	PAL	BCL	RRC	ADDED V8830, V8831, V8832 & V8833 PER ECA 05/113174F. REVISED DR DESIGNATION PER UE&C. PAID. ADDED TUBING TO ACCL. LOOPS PER AS INSTALLED CONDITION. ADDED NUCLEAR SAFETY RELATED NOTE. ADDED REDUCER IN BACK-UP AIR BOTTLE SUPPLY LINE TO AGREE WITH ECA 98/118838A. ADDED TUBING SIZES TO BACK-UP AIR BOTTLE INSTALLATION. ADDED "SHOW" VLV NO'S TO BACK-UP AIR BOTTLES. VALVE V1414 SHOWN CLOSED WITH DUAL FILTER. REVISED D.O.T. BOTTLE QUANTITY TO AGREE WITH ECA 98/118838A. ADDED S - 1" STUBS W/CAPS. REV'D UE&C REF. DWG REVISION LEVEL. ADDED PAID REF DWG NOTE. ADDED CONT FLAG COORD. ADDED NOTES 5 & 6
2	9/2/86	JDM	WES	MAP	VNK	RRC	INCORP ECA 05/113174F
1	6/23/86	DBF	UE&C CADD	VNK	JMS	RRC	CORRECTED TYPO ERRORS PER UE&C PAID
0	4-25-86	DBF	MRB	JDM	DFM	WFD	ISSUED FOR OPERATIONS. INCORP. ECA 04-00/1086-3SL, 05/113174F, 05/115239A

REF. DRAWING NO.	REV	TITLE
9763-F-500325	10	INSTR. AIR DISTRIB. PAB P & ID
9763-F-500325-1	13	INSTR. AIR DISTRIB. PAB P & ID

North Atlantic Energy Service Corporation

SEABROOK STATION

INSTRUMENT AIR
PRIMARY AUX. BUILDING
DETAIL

PID- 1-IA-B20640

CATEGORY 1

06/11/02

PID- 1-IA-B20641

PRIMARY AUXILIARY BUILDING

FOR P&ID REFERENCE DRAWINGS, SYMBOLS AND ABBREVIATIONS REFER TO DRAWINGS P&ID - LEGEND 1 AND P&ID - LEGEND 2

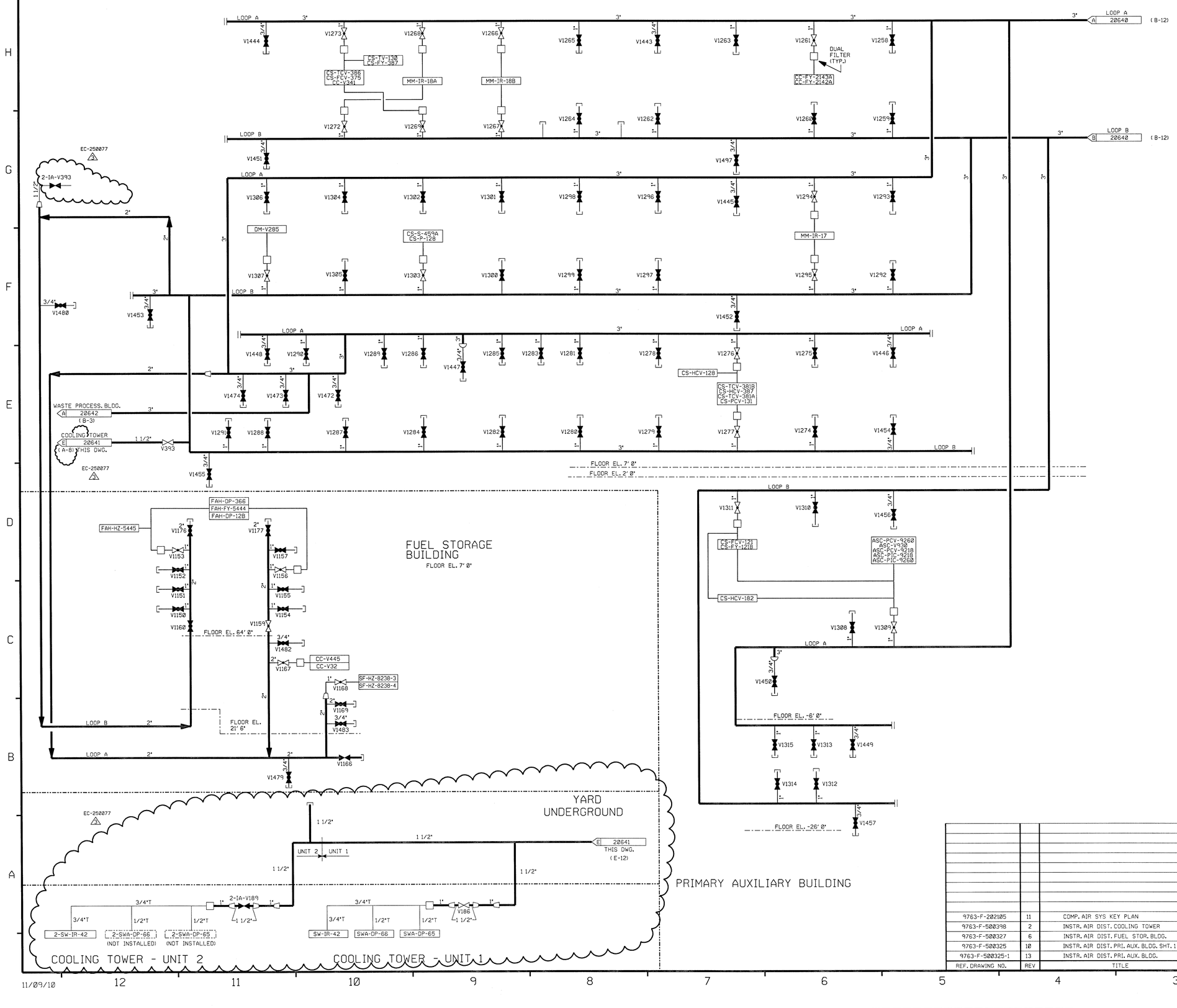

NOTE:

1. WORK THIS DRAWING WITH DRAWINGS 20636 THRU 20640 & 20642 THRU 20646.
2. ALL PIPES, VALVES, EQUIPMENT, COMPONENTS, AND INSTRUMENTS HAVE SYSTEM PREFIX IA, UNLESS NOTED OTHERWISE.
3. ☐ DENOTES DUAL AIR FILTER.
4. ALL PIPES, VALVES, EQUIPMENT, COMPONENTS, AND INSTRUMENTS ARE SAFETY CLASS N, UNLESS NOTED OTHERWISE.
5. INSTRUMENTATION ON THIS DWG. DOWNSTREAM OF PIPING ROOT VALVE CONNECTIONS HAS NOT BEEN VERIFIED.
6. △ INDICATES REVISION LEVEL
7. DELETED
8. VALVE SYMBOL MAY NOT BE REPRESENTATIVE OF INSTALLED COMPONENT TYPE, REFER TO VALVE LIST.

REV	DATE	DSGN	CHKD	CE	DESCRIPTION
3	11/10/10	GPS	PJW	JWL	INCORP. EC-250277
2	1/31/96	BCS	MPW	RSG	INCORP. MMOD 95-570 CA-0
1	11/6/86	MRJ	WRD	RRC	ADDED NIPPLES AND CAPS PER AS-BLT. COND., REVISED PIPING AND DRAIN ARRGT. PER UE&C DWG. F-805251, ADDED DUAL FLTR. IN CLG. TWR. PMP. HOUSE PER UE&C DWG. F-502228, ADDED CONT. FLAG COORD AND NOTES 5. & 7.
0	4/25/86	DBF	JDM	WFD	ISSUED FOR OPERATIONS

9763-F-202105	11	COMP. AIR SYS KEY PLAN
9763-F-500398	2	INSTR. AIR DIST. COOLING TOWER
9763-F-500327	6	INSTR. AIR DIST. FUEL STOR. BLDG.
9763-F-500325	10	INSTR. AIR DIST. PRI. AUX. BLDG. SHT. 1
9763-F-500325-1	13	INSTR. AIR DIST. PRI. AUX. BLDG.
REF. DRAWING NO.	REV.	TITLE

NEXTera ENERGY SEABROOK

SEABROOK STATION

INSTRUMENT AIR
PRIMARY AUX. BUILDING
COOLING TOWER & FUEL STORAGE
DETAIL

PID- 1-IA-B20641

11/09/10

PID- 1-IA-B20643

NHY P1D%2064 3.DGN#1

FOR P&ID REFERENCE DRAWINGS, SYMBOLS AND ABBREVIATIONS
REFER TO DRAWINGS P&ID - LEGEND 1 AND P&ID - LEGEND 2

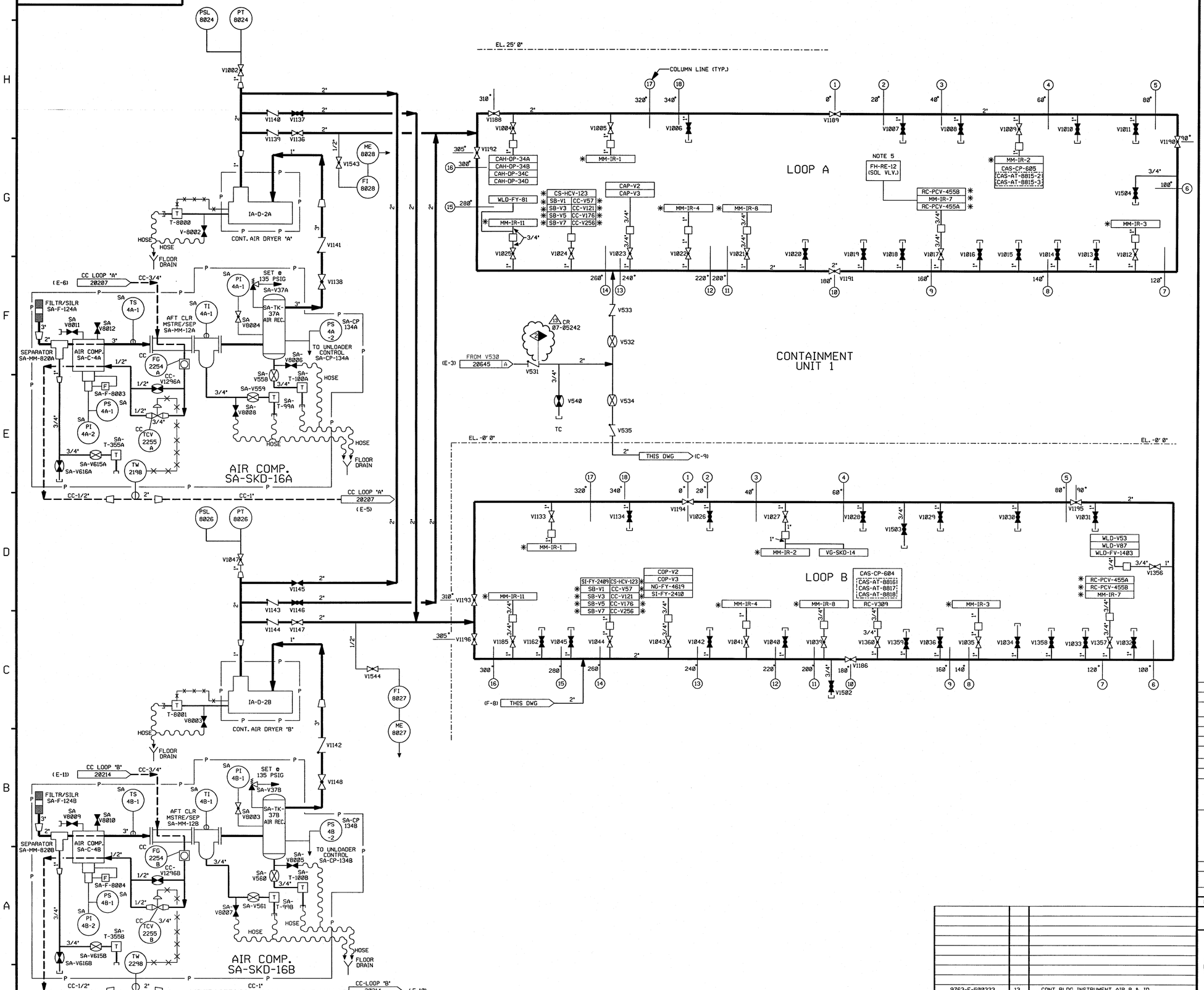

REV	DATE	DSGN	CHKD	CE	DESCRIPTION
13	5-17-07	JM	BCS	RRB	INCORP. CR 07-05242 REV 00
12	5/19/03	JM	MPW	BCS	INCORP. CR 03-02736 REV 00
11	6/9/97	MPW	DWS	JPS	INCORP. MMOD 91-559 CA-0, DCN 04 & 05 DCR 96-13 DCN 00
10	1/31/96	BCS	MPW	RSG	INCORP. MMOD-95-570 CA-0
9	12/9/94	MPW	BCL	MHO	INCORP. MMOD-93-545 CA-0
8	6/28/94	MPW	DWS	BAW	INCORP. DCR 91-060 CA-0
7	12/3/92	BCL	MRB	GRM	REINCORP. DCR 90-004 CA-0
6	10/21/92	BCL	MRB	IW	INCORP. DCR 90-004 CA-0
5	7/18/92	MRB	JM	GRM	INCORP. MMOD 90-582, CA0
4	1/18/90	MRB	GPM	GRM	INCORP. DCR 86-320 CA10 RE-INCORP. ECA 99/114614A REVISED NOTE 2 DELETED NOTE 8 ADDED F-8003 & F-8004 PER FP-20430
3	11/6/86	MRJ	WRD	RRC	INCORP. NCR 86/111A REVISED RELIEF VLV. TAG NO. AND ADDED MM-IR-6 PER UE&C P&ID. REMOVED SKD DRN. PIPING CONTINUATION FLAG REF'S PER ECA 19/100566A. REVISED SKD PIPING PER FOREIGN PRINT 20430. ADDED CONTINUATION FLAG COORD'S, AND NOTES 6, 7 & 8. ADDED NIPPLE AND CAPS TO SPARE INSTR. VLVS. PER AS-BUILT CONDITION.
2	6/27/86	JDM	VNK	RRC	INCORP ECA 99/114596A
1	4/25/86	JDM	DWS	WFD	RENUMBERED SA V8003-V8008 INCORP. ECA 99/114614A
0	3/4/86	CB	JDM	WFD	ISSUED FOR OPERATIONS

9763-F-500323	13	CONT. BLDG. INSTRUMENT AIR P & ID
REF. DRAWING NO.	REV	TITLE

FPL ENERGY Seabrook Station

INSTRUMENT AIR
CONTAINMENT BUILDING
DETAIL

PID- 1-IA-B20643

5/17/07

PID- 1-IA-B20644

TURBINE BUILDING

LOOP A
6 20638 (C-12)

LOOP B
8 20639 (C-12)

PIPES ABOVE GROUND

EMERG. FEEDWATER PUMP BLDG.

ASH-TCV-5796
ASH-TIC-5796
EPA-DP-374
EPA-DP-373

EPA-HZ-5467
EPA-HZ-5768

FP-V-561
FP-V-562

MS-FY-395A-V4B
MS-FY-395A-V4A
MS-FY-395A-V4C
MS-FY-395-V3
MS-FY-395-V9-8
1-MS-TK-243
V545
V546
V551
V552
V553
V400
V396
V336
V507
FY 395 A
FY 395 B
MS
VENT
MS-V-395

PIPE TUNNEL

MS & FW PIPE CHASE (EAST)

V335
V334
V210
MS-V88-V4A
MS-V88-V4B
MS-V88
MS-V90
MS-V90-V4A
MS-V90-V4B
MS-PY-3003 20647 (H-10)
MS-PY-3002 20647 (F-10)
V180
V208
V524
V526
V525
MM-IR-51A
MM-IR-51B
V1523
V1522
V377
V178
CONTAINMENT TEST INSTR. RM.

HYDROGEN RECOMBINER

EC-250077 18
UNDERGROUND

NOTE 5

CIRC. WATER PUMP HOUSE

2-1A
PSL 8034
2-CW-CP-64
UNIT 2
V408
V407
V499
V222
2-SCW-V007
V505
1-CWA-L-4A
V409
1-CWA-L-4B
V410
V411
1-ASH-TIC-5177
1-CWA-L-4C
1-ASH-TCV-5177
V412
NOTE 7
V230
2-SCW-V008
V228
2-SCW-V009
V224
1-SCW-V007
1-SCW-FV-8203
V413
1-SCW-V008
V181
V216
V1524
2-MM-IR-44
1-DM-TCV-3475
1-DM-TIC-3475
PSL 8034
1-SCW-CP-64
V415
1-CL-PCV-3642
1-SCW-V009
V414
1-CW-V098
1-CW-V091
1-CW-V082
1-MM-IR-44
V182
V416
V220

SERVICE WATER PUMP HOUSE

1-MM-IR-73
V232
V272
V234
V236
V238
V240
V242
V402
SPARE
NOMEET 52
DUAL FILTER (TYP.)
1-SW-CP-82A
SCW-V13
1-SW-CP-82B
SCW-V14
2-SW-CP-82A
2-SCW-V13
2-SW-CP-82B
2-MM-IR-73
2-SCW-V14
V417
V418
V419
V420
V421
2-SWA-DP-39B
1-SWA-DP-39B
2-SWA-DP-39A
1-SWA-DP-39A
1SEE NOTE

EC-250077 18
VALVE PIT
V528
3/4"
4"
UNDERGROUND
V283

CHLORINATION BUILDING

V509
V510
V511
V522
V512
V513
V508
V498
V477
V476
V475
CLA-L-37D
CLA-L-37C
CLA-TIC-6212
(NON-FUNCTIONAL)
IA-MM-MISC-V4
CLA-L-37B
CLA-L-42A
CLA-L-37A
CLA-L-48
V521
V520
V519
V482
V514
V515
ELECTRICAL ROOM
V517
V516
CLA-TIC-6201
V518
V523

FOR P&ID REFERENCE DRAWINGS, SYMBOLS AND ABBREVIATIONS REFER TO DRAWINGS P&ID - LEGEND 1 AND P&ID - LEGEND 2

NOTES:

1. WORK THIS DRAWING WITH DRAWINGS 20636 THRU 20643, 20645, 20646 & 20647.
2. ALL LINES, VALVES, EQUIPMENT & INSTRUMENTS HAVE SYSTEM PREFIX IA, UNLESS NOTED OTHERWISE.
3. ☐ DENOTES DUAL AIR FILTER.
4. ALL PIPES, VALVES, EQUIPMENT, COMPONENTS AND INSTRUMENTS ARE SAFETY CLASS 'NNS', UNLESS NOTED OTHERWISE.
5. UNIT 2 EQUIPMENT SHOWN IN PHANTOM HAS NOT BEEN INSTALLED. ASSOCIATED ROOT VALVES ARE CAPPED AND WILL BE USED FOR THIS FUTURE INSTALLATION.
6. △ INDICATES REVISION LEVEL.
7. DELETED
8. DELETED
9. DELETED
10. DELETED
11. ✱ DENOTES ANS SAFETY CLASS 3, NOT ASME CODE CLASS 3.
12. INSTRUMENTATION ON THIS DRAWING DOWNSTREAM OF PIPING ROOT VALVE CONNECTIONS HAS NOT BEEN VERIFIED.
13. AIR SUPPLY MAINTAINED TO DAMPERS TO SUPPORT THE SEABROOK STATION COMPENSATORY VENTILATION PLAN C-S-I-61025.
14. VALVE SYMBOLS MAY NOT BE REPRESENTATIVE OF INSTALLED COMPONENT TYPE, REFER TO VALVE LIST.

PORTIONS OF THIS DRAWING ARE

NUCLEAR SAFETY RELATED

REV	DATE	DSGN	CHKD	CE	DESCRIPTION
18	11/10/10	GPS	BCS	JM	INCORP EC-250077
17	12/08/05	BCS	JM	DEA	INCORP. MMOD 04-529 DCN-00
16	8/12/03	JM	BCS	MPW	INCORP DCN 66-00354 AND CR 02-15128 REV.00
15	10/20/00	BCS	MPW	RWM	INCORP. MSE 00-269 REV 00 REINCORP DCR 98-023 CA-01
14	6/9/99	DWS	BCS	DJM	INCORP MMOD 970618 DCN*00
13	5/29/96	BCS	DWS	RSG	INCORP. DCR 91-26 CA-10
12	1/31/96	BCS	MPW	RSG	INCORP.MMOD 95-570 CA-0
11	12/9/94	BCL	MPW	MHO	INCORP MMOD 94-501 CA*0 AND MMOD 930545 CA0
10	3/28/94	DWS	MPW	JCM	INCORP DCR 920012 CA*0
9	2/3/94	BCL	MPW	GRM	ADDED TAG NUMBERS PER FIELD WALKDOWN AND SPEC 46-1
8	10/9/91	GPM	FCB	RWM	INCORP. DCR 90-32 CA15
7	9/4/91	MRB	JM	DJM	INCORP. DCR 90-23 CA11
6	3/28/90	MRB	APL	JEV	INCORP. DCR 89-41 CA 15 AND MADE MINOR DRAFTING ENHANCEMENTS
5	3/24/90	MRB	APL	JEV	INCORP DCR 88-183 CA09 & DCR 86-433 CA29 DELETED NOTE 7
4	4/25/89	MRB	PAL	GPM	INCORPORATED DCR 88-105 CA0 REVISED: NOTES 1, 2 AND 4 ADDED: NOTE 8
3	11/23/87	DWS	BCL	RRC	DETAILS REMOVED FROM AUX AIR SUPPLY, DETAILS WILL BE SHOWN ON CONTROL LOOP DIA AS SPECIFIED BY ECA 05/113130F.
2	11/6/86	CSB	WRD	RRC	ADDED 500370 AS REF. DWG., DUAL FILTERS IN EFWPH TO CORRECT DRAFTING ERROR, 8000 VALVE NO'S TO UNTAGGED VALVES, DRAIN VALVE V524 SHOWN CLOSED, CONT. FLAG COORD., NOTES 5,6 & 7, P&ID REF. DWG. NOTE. INSTR. IN CHLORINATION BLDG. TO AGREE WITH DESIGN DWG., REMOVED PIPING LINE NO., UPDATE REF. DWG. REV. LEVEL, REMOVED OR DESIGNATION ON ALL UNUSED INSTR. AIR ROOT VALVES, PIPING LINE NUMBER.
1	6/24/86	DWS	VFS	RRC	INCORPORATED ECA 05/113130E
0	4/25/86	DBF	JDM	WFD	ISSUED FOR OPERATIONS, INCORP ECA 05/113130C, 05/113144A, 05/112862C

REF. DRAWING NO.	REV	TITLE
9763-F-500370	2	CHLORINATION BLDG. - INSTR. PIPING
9763-F-500329	7	MS & FW PIPE ENCL. IA DISTR. P & ID.
9763-F-202105	11	COMP. AIR SYS. KEY PLAN P & ID
9763-F-202108	15	MISC. BLDG. COMP. AIR HDR. P & ID.

NEXTera ENERGY SEABROOK

SEABROOK STATION

INSTRUMENT AIR MISCELLANEOUS BUILDING DETAIL

PID- 1-IA-B20644

11/04/10

PID- 1-IA-B20645

NHY P10206450CN

TURBINE BUILDING

RHR VAULT 1

RHR VAULT 2

MS & FW PIPE CHASE(WEST)

REACTOR CONTAINMENT

RADIOACTIVE TUNNEL

LOOP A

LOOP B

3/4" T

1/2" T

1 1/2"

MM-IR-14 V1434

RH-V16 V1435

V1437

RH-HY-606-2 RH-HCV-606 V1438

RH-FY-618 RH-FY-618-1 RH-FCV-618 V1439

V1440

V1441

V1442

PLFM. EL. -3' 2"

PLFM. EL. -9' 0"

PLFM. EL. -31' 10"

PLFM. EL. -41' 2"

PLFM. EL. -59' 0"

EL. -61' 0"

RH-V17 V1425

V1426

V1427

V1428

RH-HY-607-2 RH-HCV-607 V1429

RH-FY-619 RH-FY-619-1 RH-FCV-619 V1430

V1431

V1432

V1433

PLFM. EL. -3' 2"

PLFM. EL. -9' 0"

PLFM. EL. -31' 10"

PLFM. EL. -41' 2"

PLFM. EL. -59' 0"

EL. -61' 0"

LOOP A 3/4" T

V354 1"

V382 2"

V351 3"

V352 1"

V353 1"

CR 05-05041

MS-PY-3001 MM-IR-52A

MS-PY-3004 MM-IR-52B

DUAL FILTER (TYPJ)

(H-6) 20647 D MS-PY-3004 3/4"T

ASC-FY-359

SB-V-9 SB-V-10 SB-V-11 SB-V-12

IA-V-530

MS-V92-V4A MS-V92-V4B MS-V92 MS-V86 MS-V86-V4A MS-V86-V4B

V199 SPARE

V165 1"

V288 1"

V172 3"

MS-PY-3001 (H-18) D 20647 3/4"T

V380 2"

V529 2"

V536 3/4" DR

V538 3" FC

V537 3/4" LC TC

VT V538 3/4" LC

MC X68

TO V531 20643 A (F-9) 2" 3/4"

V539 3/4" LC DR

LOOP A 3/4" T

LOOP B 3/4" T

V1464 1 1/2"

EL. -5' 0"

NG-FY-4604 RHW-V30

COP-V1 COP-V4

CS-FY-7416 1" V1412

V1460 V1458 V1420 V1418 V1416 V1414

MM-IR-12

WLD-V82 CBS-V32

CBS-V31 CBS-V33

MM-IR-13A

@ EL. -34' 6"

V1459 V1424 V1421 V1419 V1417 V1415

LOOP B 1 1/2"

V1465

FL. EL. -28' 8"

CC-V168 CC-V122 CC-V257 CC-V175

CONTROL BLDG. 20646 H (B-5)

CONTROL BLDG. 20646 G (C-5)

V503 V504

PAB 20640 B (G-4)

PAB 20640 A (H-4)

LOOP A 20638 E (F-12)

LOOP B 20639 A (D-12)

FOR P&ID REFERENCE DRAWINGS, SYMBOLS AND ABBREVIATIONS REFER TO DRAWINGS P&ID - LEGEND 1 AND P&ID - LEGEND 2

NOTES:

1. WORK THIS DRAWING WITH DRAWINGS 20636 THRU 20644, 20646 & 20647.
2. ALL LINES, EQUIPMENT, COMPONENTS AND INSTRUMENTS HAVE SYSTEM PREFIX IA, UNLESS NOTED OTHERWISE.
3. ☐ DENOTES DUAL AIR FILTER.
4. ALL LINES, EQUIPMENT, COMPONENTS AND INSTRUMENTS ARE SAFETY CLASS NNS, UNLESS NOTED OTHERWISE.
5. INSTRUMENTATION ON THIS DRAWING DOWNSTREAM OF PIPING ROOT VALVE CONNECTIONS HAS NOT BEEN VERIFIED, UNLESS NOTED BY ⊛. REFER TO DWG 1-NHY-550013 FOR VERIFIED INSTRUMENT DETAILS.
6. △ INDICATES REVISION LEVEL
7. ✱ INDICATES VALVES SUPPLIED BY WESTINGHOUSE.
8. VENTS, DRAINS AND TEST CONNECTION CODE BREAKS ARE AT THE DOWNSTREAM END OF THE OUTER ISOLATION VALVE PER 1-NHY-680111, UNLESS NOTED OTHERWISE.
9. DELETED
10. DELETED
11. VALVE SYMBOL MAY NOT BE REPRESENTATIVE OF INSTALLED COMPONENT TYPE, REFER TO VALVE LIST.

CR 05-05041 REV.0

REV	DATE	DSGN	CHKD	CE	DESCRIPTION
14	1/23/06	BCS	JM	TJM	REINCORP CR 05-05041 REV.0
13	6/7/05	BCS	JM	RRB	INCORP CR 05-05041 REV.0
12	1/31/96	BCS	MPW	RSG	INCORP MMOD 95-570 CA0
11	6/12/95	BCL	DWS	DJM	INCORP MMOD 94-570 CA0
10	12/9/94	BCL	MPW	MHD	REINCORP.DCR 980004 CA*0 AND INCORP MMOD 930545 CA*0
9	7/18/94	MPW	BCL	JCM	INCORP. DCR 86-420 CA 0 AND REINCORP. DCR 98-004 CA 0
8	2/2/94	BCL	MRB	GRM	ADDED TAG NUMBERS PER FIELD WALKDOWN AND SPEC 46-1
7	4/5/93	MRB	BCL	JM	INCORP MMOD 92-553 CA0
6	10/21/91	MRB	BCL	IW	INCORP DCR 90-004 CA0
5	10/9/91	MRB	FCB	RWM	INCORP DCR 90-32 CA0 REVISED NOTE 4 PER ENG DSGN STD. 31780 SEC. 3.6.
4	01/18/90	MRB	GPM	GRM	INCORP: DCR-86-320 CA10
3	11/23/87	DWS	BCL	RRC	DETAILS REMOVED FROM AUX AIR SUPPLY, DETAILS WILL BE SHOWN ON CONTROL LOOP DIAG, AS SPECIFIED BY ECA 05-113130F.
2	11/14/86	MRJ	PAL	RRC	ADDED NOTE 6 & CHANGED NOTE 5. ADDED CONT FLAG COORD'S, V0034 THRU V0041, NIPPLES & CAPS, ABANDONED CONN'S, ADDITIONAL DUAL FILTERS AND AIR USERS, REVISED LOC OF TAKE-OFFS & TUBING SIZES PER AS-INSTALLED CONDITIONS. INCORP ECA 05/113130F & 74/1071555A, CORRECTED DRAFTING ERRORS.
1	6/23/86	DBF	VNK	RRC	INCORPORATED ECA 05/113130E
0	4/25/86	DBF	JDM	WFD	ISSUED FOR OPERATIONS INCORP ECA 05/113044A 05/113130E 80/1040034 99/113108

REF. DRAWING NO.	REV	TITLE
9763-F-202105	11	COMP AIR SYS KEY PLAN P & ID
9763-F-500335	4	RHR VAULTS IA DISTRIB P & ID
9763-F-500379	4	RADIOACTIVE TUNNEL IA DISTRIB P & ID
9763-F-500329	7	MS & FW PIPE CHASE IA DISTRIB P & ID
9763-F-202108	15	MISC BLDGS COMP AIR HEADERS P & ID

FPL ENERGY Seabrook Station

INSTRUMENT AIR MISCELLANEOUS BUILDING DETAILS

PID- 1-IA-B20645

01/19/06

PID- 1-IA-B20646

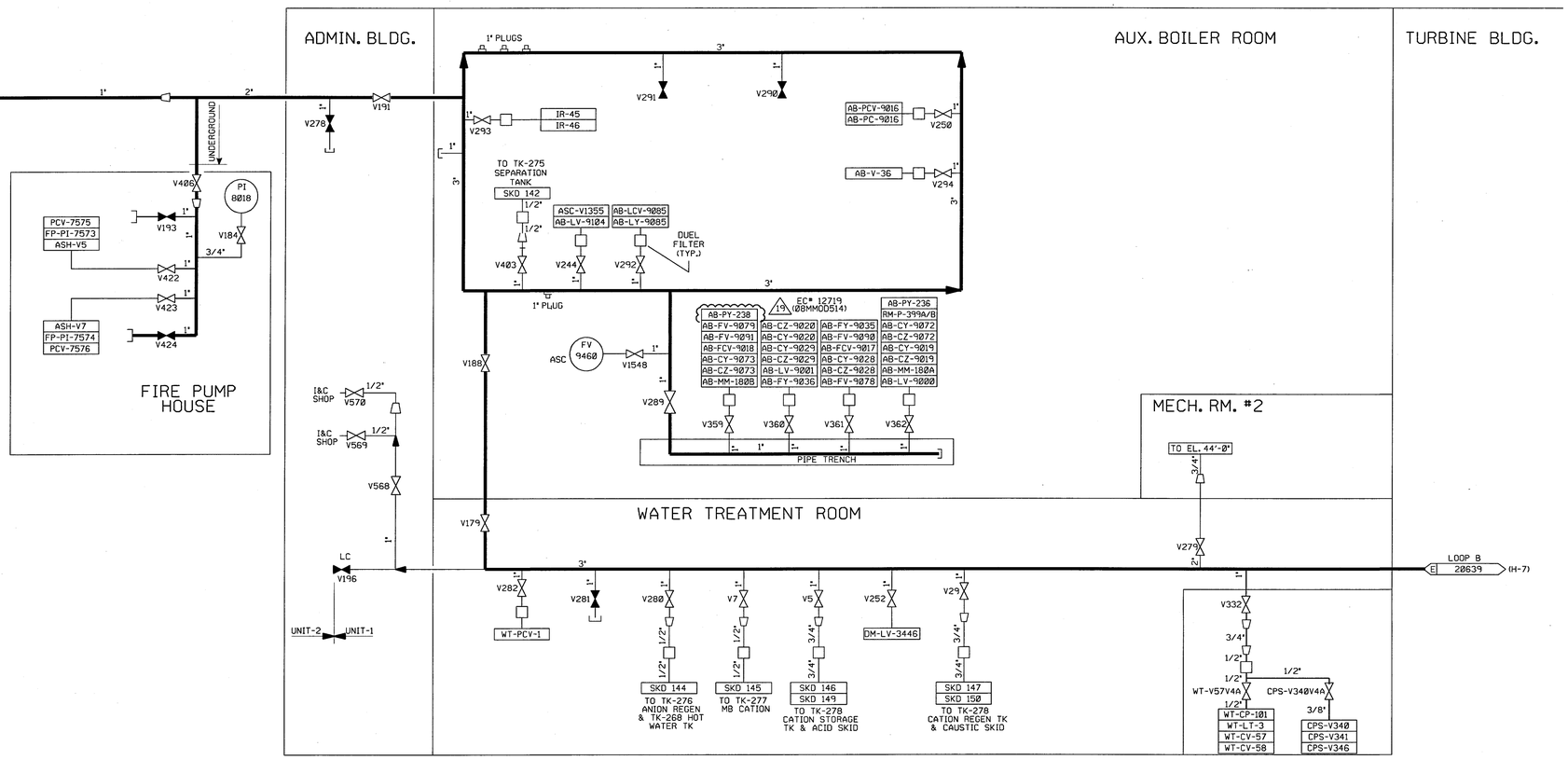

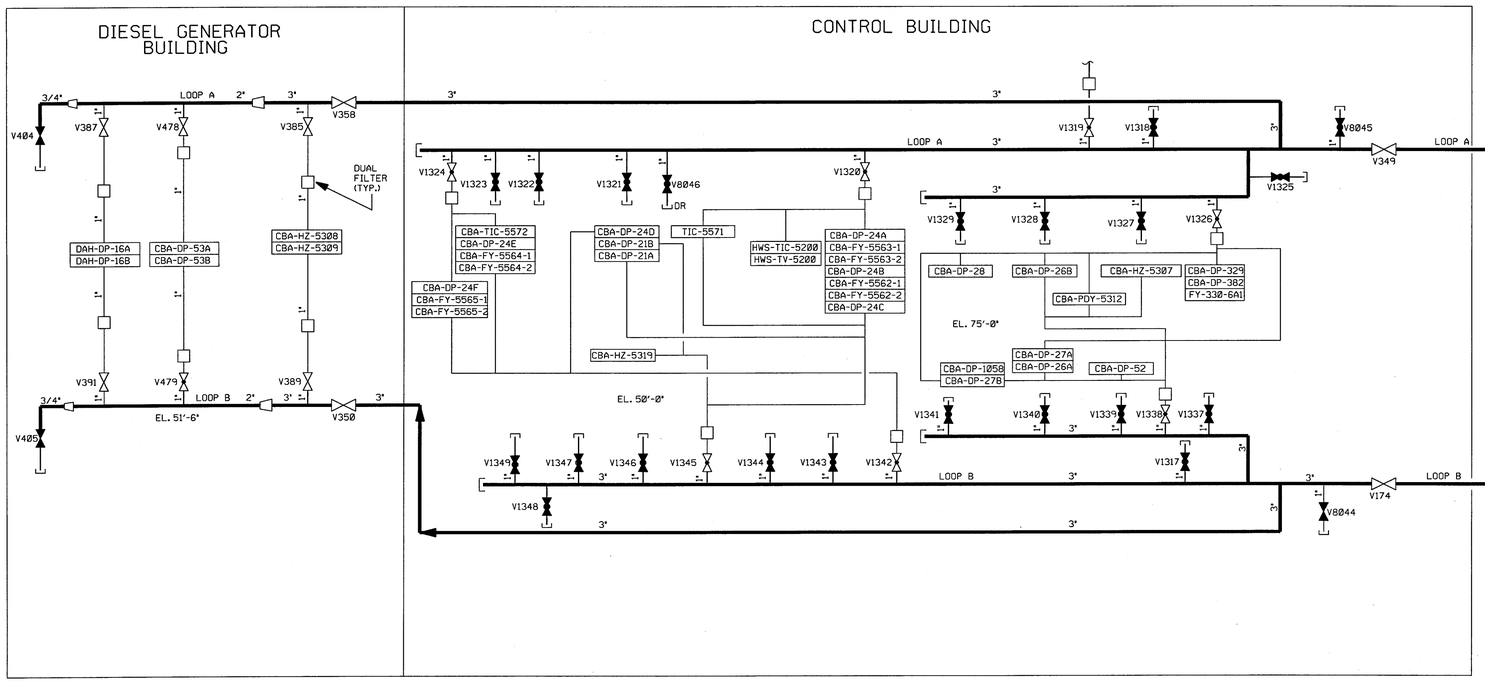

FOR P&ID REFERENCE DRAWINGS, SYMBOLS AND ABBREVIATIONS REFER TO DRAWINGS P&ID - LEGEND 1 AND P&ID - LEGEND 2

NOTES:

1. WORK THIS DRAWING WITH DRAWINGS 20636 THRU 20645.
2. ALL LINES, EQUIPMENT, COMPONENTS AND INSTRUMENTS HAVE SYSTEM PREFIX IA, UNLESS NOTED OTHERWISE.
3. ☐ DENOTES DUAL AIR FILTER.
4. ALL LINES, EQUIPMENT, COMPONENTS AND INSTRUMENTS ARE SAFETY CLASS NNS, UNLESS NOTED OTHERWISE.
5. INSTRUMENTATION ON THIS DWG DOWNSTREAM OF THE PIPING ROOT VALVE CONNECTION HAS NOT BEEN FIELD VERIFIED.
6. △ INDICATES REVISION LEVEL
7. VALVE SYMBOL MAY NOT BE REPRESENTATIVE OF INSTALLED COMPONENT TYPE, REFER TO VALVE LIST.

REF. DRAWING NO.	REV	TITLE
9763-M-500214	1	FIRE PUMP HOUSE, IA DISTR. P & ID.
9763-F-202109	9	MISC. BLDG. COMP. AIR HDRS. P & ID.
9763-C-500324	7	CONTROL BLOG. INSTR. AIR DISTRIB P & ID
9763-F-202105	11	COMP. AIR SYS. KEY PLAN P & ID.
9763-M-500326	6	DIESEL GEN. BLDG. IA P & ID.
9763-C-500330	9	ADMIN. & SERV. BLDG. AUX. BLR. & WTR TRT

REV	DATE	DSGN	CHKD	CE	DESCRIPTION
19	3/17/09	JM	BCS	EMB per TMD 3-17-09	INCORP EC* 12719 (08MM0D514 DCN 00)
18	2/26/09	JM	BCS	TMD	PARTIAL INCORP EC* 12719 (08MM0D514 DCN 00)
17	4/19/05	BCS	JM	PAL	INCORP DCR 97-13 DCN-00,55, 90, 222
16	4/19/04	BCS	JM	SAK	PARTIAL INCORP DCR 97-13 DCN-55
15	10/10/01	BCS	JM	JCM	INCORP MMOD 01-0542 DCN*01
14	3/24/00	DWS	BCS	JMS	INCORP DCR 980039 DCN*00
13	3/7/00	MPW	DWS	DJM	INCORP DCR 970012 DCN 20
12	2/11/00	DWS	BCS	MPW	PARTIAL INCORP DCR 980039 DCN*00
11	5/27/99	MPW	BCS	DJM	INCORP DCR 97-12 DCN 00
10	11/17/98	DWS	BCS	RSG	INCORP MMOD 980639 DCN*00
9	11/7/97	MPW	BCS	RCP	INCORP DCR 94-51 DCN 03
8	8/3/94	BCS	MPW	RSG	INCORP MMOD 95-570 CA-0
7	8/3/94	DWS	BCL	WFZ	INCORP DCR 930007 CA*0 & 1
6	5/20/94	BCL	DWS	JCM	INCORP MMOD 93-564 CA-0,04
5	4/28/92	MRB	BCL	RRB	INCORP MMOD 91-515 C0
4	12/15/89	MRB	PAL	IW	INCORPORATED DCR 87-425 CA
3	9/29/89	MRB	APL	JWS	INCORPORATED DCR 86-709 CA 21 REVISED: NOTE 4
2	11/12/86	WDS	WRD	RRC	REMOVED VALVES V388, 386, 390, 392, 500, 501-NOT INSTALLED. ADDED VALVES V8044, 8045, 8046 & CAPS PER ASBUILT CONDITION. DELETED NIPPLE & CAP FROM VALVE 290 & 291. ADDED PLUG CONN'S AS REQ'D TO 3" HEADER IN AUX BOILER RM. DELETED NOTE: ALL VALVES TO BE LOCATED IN DIESEL GEN BLDG. ADDED INDICATION FOR VALVES TO BE NORMALLY CLOSED FOR V1327, 1328, 1337, 1344, 1321, 1339, 1322, 1323 & 1324. REVISED VALVES V350 & V358 TO GATE VALVES. REVISED REF DWG REVISIONS. ADDED DWG COORD'S REVISED INSTR NO TO AB-LY-9000. ADDED DESIGNATION FOR UNDERGROUND PIPING. REVISED USER ROUTING FROM D.F.'S. ADDED D.F. & DELETED D.F. AS REQUIRED.
1	6/23/86	DBF	VNK	RRC	VALVES CHANGED TO GATE & ADDED CAP PER WALKDOWN.
0	4/25/86	DBF	JDM	WFD	ISSUED FOR OPERATIONS, INCORP. ECA 19/112501A

FPL ENERGY Seabrook Station

INSTRUMENT AIR MISCELLANEOUS BUILDINGS DETAILS

PID- 1-IA-B20646

03/06/09

PID- 1-IA-B20647

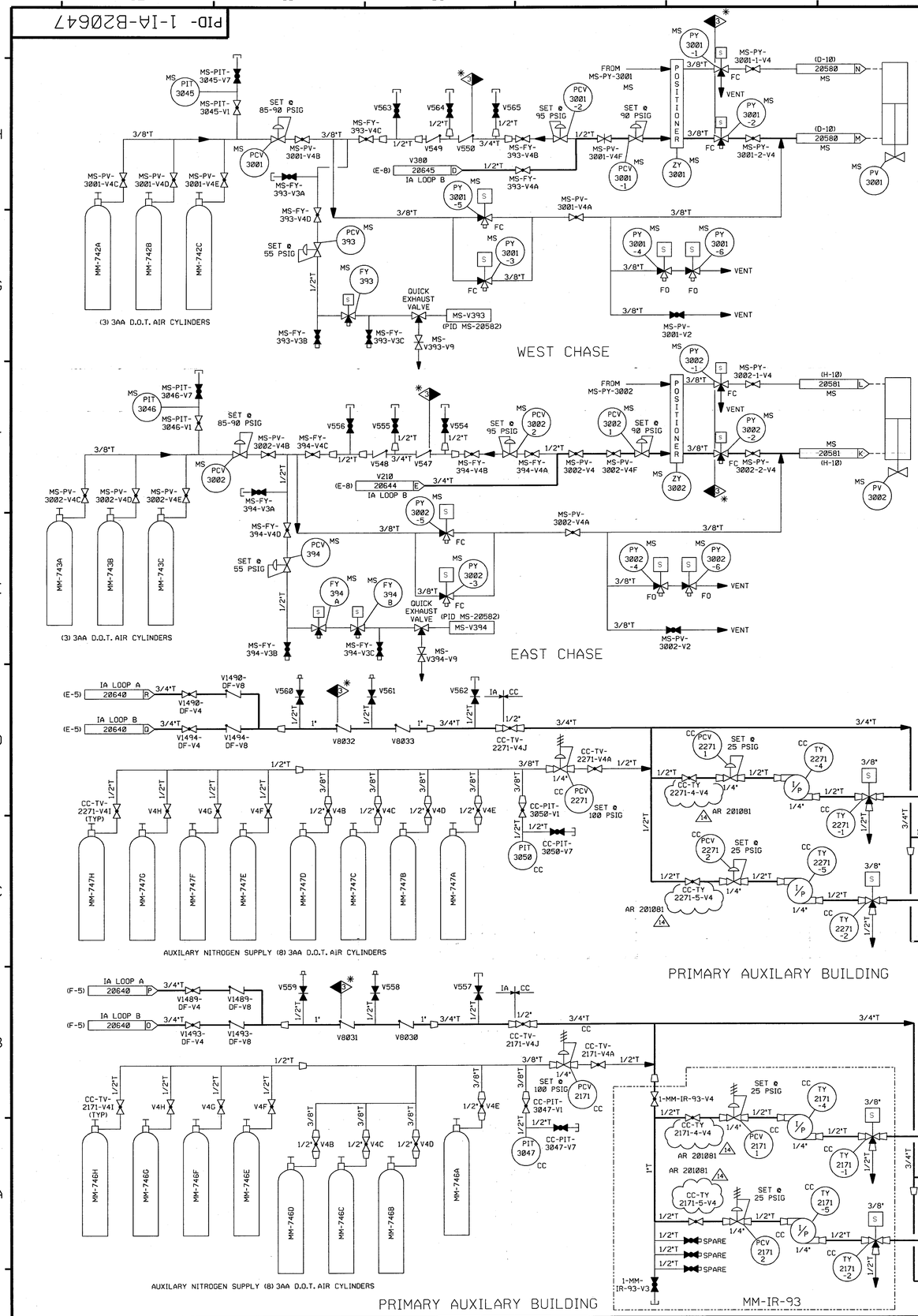

FOR P&ID REFERENCE DRAWINGS,SYMBOLS AND ABBREVIATIONS REFER TO DRAWING P&ID-LEGEND 1 AND P&ID-LEGEND 2

NOTES:

1. ALL LINES, VALVES, EQUIPMENT & INSTRUMENTS HAVE SYSTEM PREFIX IA, UNLESS NOTED OTHERWISE.
2. ALL PIPES, VALVES, EQUIPMENT, COMPONENTS AND INSTRUMENTS ARE SAFETY CLASS 'NNS', UNLESS NOTED OTHERWISE.
3. WORK THIS DRAWING WITH DRAWINGS 20636 THRU 20646.
4. * DENOTES ANS SAFETY CLASS 3, NOT ASME CODE CLASS 3.
5. △ INDICATES REVISION LEVEL.

PORTIONS OF THIS DRAWING ARE

NUCLEAR SAFETY RELATED

REF. DRAWING NO.	REV	TITLE
1-NHY-506212	5	CC PRI. COMPONENT COOLING WATER HX-E17A & B
1-NHY-506585	5	MS-PV-3001 CONTROL LOOP DIAGRAM
1-NHY-506555	20	MS SUPPLY TO EMEGENCY FD PUMP TURBINE
1-NHY-520329	7	MS & FW PIPE CHASE IA DISTRIBUTION P&ID
1-NHY-520325-1	13	INSTRUMENT AIR DISTRIBUTION PAB P&ID
1-NHY-506588	5	MS-PV-3004 CONTROL LOOP DIAGRAM
1-NHY-506587	5	MS-PV-3003 CONTROL LOOP DIAGRAM
1-NHY-508118	1	INSTALL. DETAILS FOR CC-TV-2171-1 & CC-TV-2171-2
1-NHY-508117	1	INSTALL. DETAILS FOR CC-TV-2271-1 & CC-TV-2271-2

REV	DATE	DSGN	CHKD	CE	DESCRIPTION
14	9/21/09	BCS	JM	DEA	INCORP. AR #201081
13	2-21-07	BCS	JM	RRB	INCORP. MSE 03-143 REV 00
12	12/21/05	JM	BCS	JC	INCORP. CR 05-13486 REV 00
11	9/16/04	BCS	JM	MRJ	PARTIAL INCORP. MSE 03-143 REV 00
10	10/11/03	MPW	MAP	RRB	INCORP. MSE 02-206 REV 00
9	11/15/02	JM	BCS	RRB	INCORP. CR 01-10708 REV 00 & CR 02-08438 REV 00
8	6/27/02	BCS	MPW	PEB	INCORP. DCR 01-017 DCN 07
7	5/25/02	MPW	BCS	RRB	INCORP. DCR 01-017 DCN 06
6	5/14/02	MPW	JM	MAP	INCORP. DCR 01-017 DCN 00
5	5/15/01	BCS	MPW	RPW	INCORP. MMOD 99-510 DCN 00 & 01
4	6/02/98	DRL	BCS	JWS	INCORP. MMOD 99-550 CA 01 & 02
3	6/20/97	MPW	DWS	BAW	INCORP. MMOD 96-550 CA 01 & DCR 97-004 DCN 00
2	10/30/96	MPW	BCS	VWS	INCORP. MMOD 96-550 CA 0
1	11/13/95	BCL	MPW	RMW	INCORP. DCR 94-029 CA 6
0	11/29/94	——	MPW	MHO	ISSUED FOR OPERATIONS. MMOD 93-545 CA 0

NEXTera ENERGY SEABROOK

SEABROOK STATION

INSTRUMENT AIR BOTTLE SUPPLY

PID- 1-IA-B20647

09/01/09

PID- 1-SA-B20649

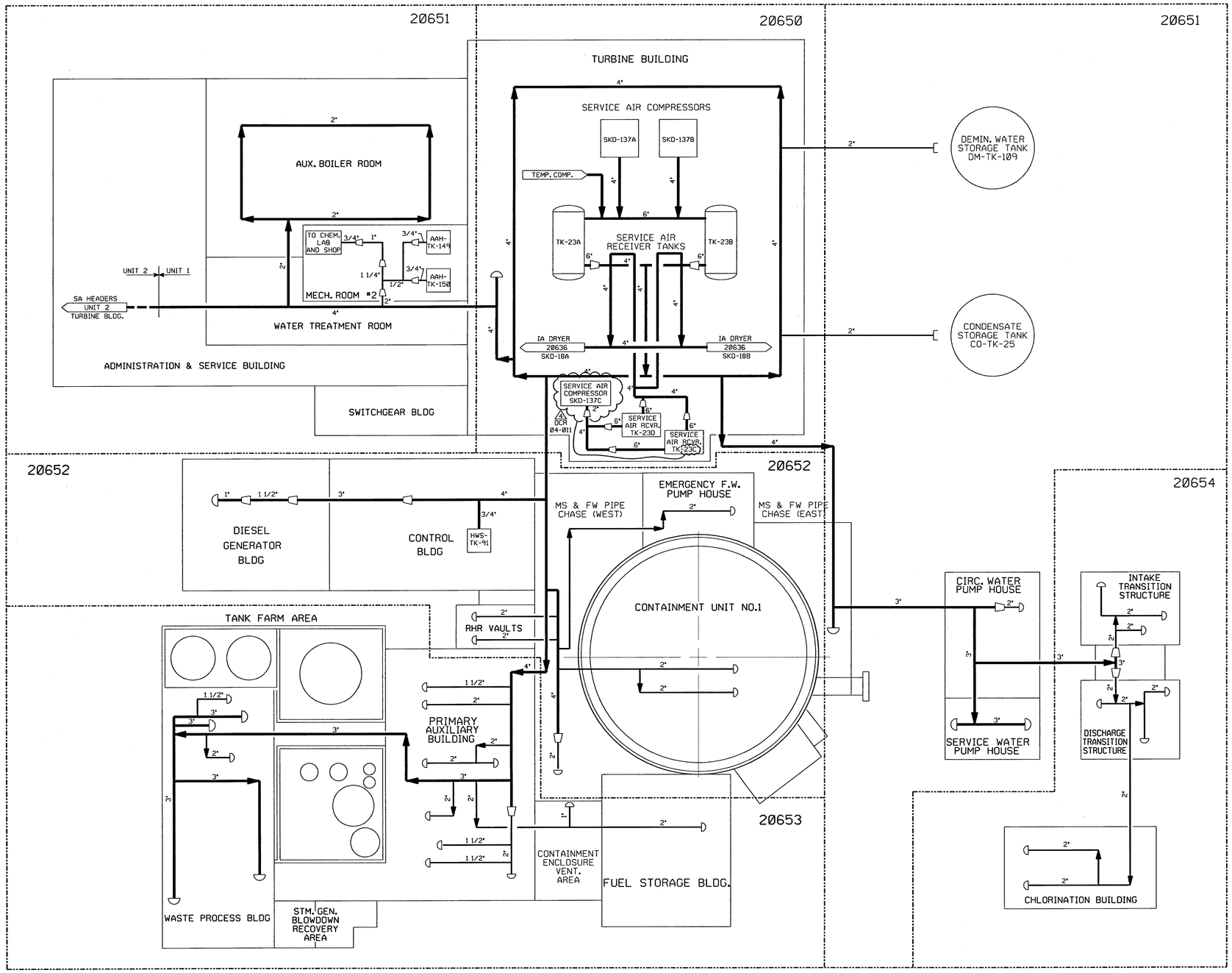

NOTES :

1. WORK THIS DRAWING WITH DRAWINGS 20650, 20651, 20652, 20653 & 20654
2. ALL LINES, EQUIPMENT, COMPONENTS AND INSTRUMENTS HAVE SYSTEM PREFIX SA, UNLESS NOTED OTHERWISE.
3. △ INDICATES REVISION LEVEL.

REV	DATE	DSGN	CHKD	CE	DESCRIPTION
4	11/12/08	JM	JWB	JAE	INCORP DCR 04-011 DCN 00
3	5/29/96	BCS	DWS	RSG	INCORP DCR 91-26 CA-01
2	3/24/94	DWS	BCL	WFZ	INCORP DCR 930016 CA*0 & 1
1	1/28/87	WDS	WRD	RRC	REVISED REF. DWG. REVISIONS. ADDED NOTE 3. REVISED PER LATEST SYS. DWGS.
0	3/21/86	TAK	JDM	WFD	ISSUED FOR OPERATIONS

REF. DRAWING NO.	REV	TITLE
9763-F-804989	7	SERVICE AIR P & ID
9763-F-202109	9	COMP. AIR HEADERS, MISC. BLDGS. P & ID
9763-F-202108	15	COMP. AIR HEADERS, MISC. BLDGS. P & ID
9763-F-202107	12	COMP. AIR HEADERS, TURB. BLDG. P & ID
9763-F-202106	11	COMPRESSED AIR SYS. P & ID
9763-F-202105	11	COMPRESSED AIR SYS. KEY PLAN P & ID

FPL ENERGY Seabrook Station

SERVICE AIR SYSTEM OVERVIEW

PID- 1-SA-B20649

11/11/08

DSA2#20,220949 .DGN#1

PID- 1-SA-B20650

OPER. V110 1" / MEZZ. V113 1" / GRD. V112 1" — 3/4" V111

OPER. V98 1" / MEZZ. V97 1" / GRD. V96 1" — 3/4" V99

OPER. V86 1" / MEZZ. V85 1" / GRD. V84 1" — 3/4" V87

OPER. V82 1" / MEZZ. V81 1" / GRD. V80 1" — 3/4" V83

GRD. V76 1" — 3/4" V79

CPS DEMIN VESSELS A 20655 (G-4) 3"

OPER. V78 1" / MEZZ. V77 1" — 3/4" V213

V640 3"

GRD. V72 1" — 3/4" V75

OPER. V118 1" / MEZZ. V117 1" / GRD. V116 1" — 4"x6" V119

AR SYS. (H-11) H 20744 — V204 1" — MECH. VACUUM PUMP DISCH HDR

F-292A AIR FILTER; F-295A BLOWDOWN SILENCER; HYDRAULIC CYLINDER; V625A; BLOW DOWN VALVE; FY 1SV A; S; COOLING FAN FN 195A; F-297A BREATHER; GEAR CASE; SUMP; OIL MANIFOLD; COMPRESSOR 1ST STAGE; C-16A; PT 1AVPT A; TE 5OTT A; TE 2ATT A; SILENCER F-293A; AFTER-COOLER; E-222A; V628A; V626A; MOISTURE SEPARATOR; E-220A; TE 7ATT A; PT 4APT A; V632A; EP-53A; TE 4ATT A; PT 3APT A; V633A; F-294A SILENCER; S-528A; V638A; 1/2"; PT 60PT A; RO OR A; S 529A; V636A; P-416A OIL PUMP; F-296A OIL FILTER; PT 50PT A; V635A; V634A; E-223A OIL COOLER; E-221A INTER-COOLER; EP-51A; V627A; PT 2APT A; TE 3ATT A; E-219A; EP-52A; MOISTURE SEPARATOR; C-16A COMPRESSOR 2ND STAGE; V629A; V630A; S-527A; V631A; V637A; DRN; SA-SKD-137A SERVICE AIR COMPRESSOR

F-292B AIR FILTER; F-295B BLOWDOWN SILENCER; HYDRAULIC CYLINDER; V625B; BLOW DOWN VALVE; FY 1SV B; S; COOLING FAN FN 195B; F-297B BREATHER; GEAR CASE; SUMP; OIL MANIFOLD; COMPRESSOR 1ST STAGE; C-16B; PT 1AVPT B; TE 5OTT B; TE 2ATT B; SILENCER F-293B; AFTER-COOLER; E-222B; V628B; V626B; MOISTURE SEPERATOR; E-220B; TE 7ATT B; PT 4APT B; V632B; EP-53B; TE 4ATT B; PT 3APT B; V633B; F-294B SILENCER; S-528B; V638B; 1/2"; PT 60PT B; RO OR B; S 529B; V636B; P-416B OIL PUMP; F-296B OIL FILTER; PT 50PT B; V635B; V634B; E-223B OIL COOLER; E-221B INTER-COOLER; EP-51B; V627B; PT 2APT B; TE 3ATT B; E-219B; EP-52B; MOISTURE SEPERATOR; C-16B COMPRESSOR 2ND STAGE; V629B; V630B; S-527B; V631B; V637B; DRN; SA-SKD-137B SERVICE AIR COMPRESSOR

MM-561A; MM-561B; V709; V710; MSE 04-147 36

3/4" V268 DR; V74 OPER.; V73 1" MEZZ.; V212 3/4" DR

TURBINE BLDG. YARD AREA; DEMIN. WTR. TK. 20651 D (G-12); OM-TK-109; V140 2"

V70 1" OPER.; V69 1" MEZZ.; V211 3/4"

GRD. V68 1"; YARD (ABOVE GROUND) LUBE OIL STOR BLDG; TURBINE BLDG.; V71; V1164 1"; V719; V720 F-329; HC

OPER. V66 1"; MEZZ. V65 1"; GRD. V64 1"; V67 3/4"

TURBINE BLDG. YARD AREA; COND. STO. TK. 20651 C; CO-TK-25 (F-12); V145 2"

OPER. V58 1"; MEZZ. V57 1"; GRD. V56 1"; V59 3/4"

OPER. V62 1"; MEZZ. V61 1"; GRD. V63 1"; 3/4"

DR V246 3/4"

WTR. TREATMENT ROOM F 20651 (B-5) 4"

MEZZ. V108 1" / GRD. V107 1" — 3/4" V109

MEZZ. V105 1" / GRD. V104 1" — 3/4" V106

MEZZ. V101 1" / GRD. V100 1" — 3/4" V103; V296 1"

OPER. V122 1" / MEZZ. V121 1"

GRD. V120 3/4" — V123

SET @ 135 PSIG. V27 3/4"; PI 8519; V28; SERVICE AIR RECEIVER TK-23A; V10; V11; RO 8554; V16; SET @ 135 PSIG. V714 1 1/2"

PSL 8545; V20; V21; V23; V24; V12; V13; V5; V4; V8; V724 (NOTE 13); 3"; PI 8520; V31; V14; V15; SET @ 135 PSIG. V30 3/4"; RO 8555; V19; V18; V17; V22; SERVICE AIR RECEIVER TK-23B; V715 1 1/2"

V2; V3; V1; M.H.; V92 FC; V33; V288; PSL 8548; V93 FC; V34; V36; V37; V32; S-113B; V142 1/2"; T-98B V; V1178; V1169; V1175 SEE NOTE 10; MSE 04-147 36; V1176 SEE NOTE 10; V1170; V1177; V38; V35; V88; V614; V1165; V1166; V29; V1179; S-113A 1/2"; V139; T-98A V; YARD TB; INSTRUMENT AIR DRYER A 20637 SKD-18A (G-7); INSTRUMENT AIR DRYER 20637 B SKD-18B (B-7); FE 8533; PT 8510; PTS 8509; V225; V224

MS & FW 20651 E PIPE CHASE (EAST) (H-11); MS & FW 20652 G PIPE CHASE (WEST) (G-7); V127; V124; PIPE ABOVE GROUND; YARD AREA; TURBINE BLDG.

MM-1012; V723; V722; NOTE 12; F-292C AIR FILTER; F-295C BLOWDOWN SILENCER; HYDRAULIC CYLINDER; V625C; BLOW DOWN VALVE; RO 10R C; FY 1SV C; S; COOLING FAN FN 195C; F-297C BREATHER; GEAR CASE; SUMP; OIL MANIFOLD; COMPRESSOR 1ST STAGE; C-16C; PT 1AVPT C; TE 5OTT C; TE 2ATT C; SILENCER F-293C; AFTER-COOLER; E-222C; V628C; MOISTURE SEPARATOR; E-220C; TE 7ATT C; PT 4APT C; EP-55C; V626C; EP-53C; TE 4ATT C; PT 3APT C; V633C; F-294C SILENCER; S-528C; V638C; 1/2"; PT 60PT C; RO 20R C; V636C; P-416C OIL PUMP; F-296C OIL FILTER; PT 50PT C; V635C; V634C; E-223C OIL COOLER; E-221C INTER-COOLER; EP-51C; V627C; PT 2APT C; TE 3ATT C; E-219C; EP-52C; MOISTURE SEPARATOR; C-16C COMPRESSOR 2ND STAGE; V630C; S-527C; V631C; V637C; V629C; DRN; SA-SKD-137C SERVICE AIR COMPRESSOR

V613; V612; PI 8502; V1180; V717 SET @ 135 PSIG; V1186 SET @ 135 PSIG; V1167; V1168; PI 8503; V1181; V716 SET @ 135 PSIG; V1187 SET @ 135 PSIG; SERVICE AIR RECEIVER TK-23D; SERVICE AIR RECEIVER TK-23C; V726 SEE NOTE 12; 1/2"; MM-1049; MM-1051; V725; V727; V729; V728; SEE NOTE 13; V730; DR; V1171; V1173; V1172; V1174; V1182; S-113D; T-98D; V1184; 1/2"; FLOOR DRAIN; V1183; S-113C; V1185; T-98C

FOR P&ID REFERENCE DRAWINGS, SYMBOLS AND ABBREVIATIONS REFER TO DRAWINGS P&ID - LEGEND 1 AND P&ID - LEGEND 2

NOTES:

1. WORK THIS DRAWING WITH DRAWINGS 20649, 20651, 20652 & 20653.
2. ALL LINES, EQUIPMENT, COMPONENTS AND INSTRUMENTS HAVE SYSTEM PREFIX SA, UNLESS NOTED OTHERWISE.
3. ALL LINES, EQUIPMENT, COMPONENTS AND INSTRUMENTS ARE SAFETY CLASS NNS UNLESS NOTED OTHERWISE.
4. INSTRUMENT REFERENCES:
   - (A) TO SCC-V126, FV-7060 (DWG. SCC-20078)
   - (B) TO SCC-V129, FV-7061 (DWG. SCC-20078)
   - (C) TO SCC-V132, FV-7062 (DWG. SCC-20078)
5. ALL PIPING RUNNING BETWEEN BUILDINGS OR TO OUTSIDE EQUIPMENT IS BELOW GROUND EXCEPT AS NOTED.
6. △ INDICATES REVISION LEVEL.
7. DELETED
8. PIPE CAPS OR QUICK DISCONNECTS MAY BE INSTALLED ON SERVICE AIR STATIONS AS DEEMED NECESSARY BY STATION STAFF.
9. DELETED
10. INTERNALS OF CHECK VALVES, SA-V1175 & 1176 HAVE BEEN REMOVED.
11. VALVE SYMBOL MAY NOT BE REPRESENTATIVE OF INSTALLED COMPONENT TYPE, REFER TO VALVE LIST.
12. EXCESS FLOW CHECK VALVES 1-SA-V-723 & V-726 SEATS IF FLOW EXCEEDS 120 SCFM @ 100 PSIG INLET PRESSURE.
13. CHECK VALVE HAS 0.285" HOLE IN DISC TO SUPPORT AUTO START OF PORTABLE COMPRESSOR.
14. ✳ THESE VALVES ARE SUBJECT TO A PART SUBSTITUTION AUTHORIZED BY #4MSE147. VALVE SYMBOL MAY NOT REFLECT INSTALLED VALVE TYPE. DRAWING UPDATES WILL BE MADE UPON RECEIPT OF FORM WM 8.4F. 36 MSE 04-147

REV	DATE	DSGN	CHKD	CE	DESCRIPTION
36	11/12/08	JM	JWB	[illegible]	INCORP MSE 04-147 REV. 00, 02, 03, 04
35	10/16/07	BCS	JM	DEA	INCORP. DCR 04-011 DCN-00, 04, 13 & ASBUILT INFO
34	8/7/07	BCS	JM	MAP	PARTIAL INCORP. MSE 04-147 REV. 00
33	6/21/07	BCS	JM	RWM	INCORP. CR 07-03416 REV. 0
32	10/6/06	BCS	JM	RRB	PARTIAL INCORP. MMOD 04-147 DCN 00
31	7/27/06	BCS	JM	DEA	INCORP. MSE 06-046 DCN-00
30	12/15/05	JM	BCS	DEA	INCORP. MMOD 05-520 DCN 00 PARTIAL INCORP MSE 04-147 REV 03
29	11/17/05	BCS	JM	DEA	INCORP. MSE 05-031 REV 00
28	10/05/05	BCS	JM	RRB	INCORP. MSE 05-135 REV.00 & REMOVED INCOMPLETE ITEM #1 PER SA QP PROCED. ODN1042.01 &03)
27	4/19/05	BCS	JM	RRB	INCORP. DCR-97-13 DCN-00, 54; MMOD 95-570 DCN-00; PARTIAL INCORP. MSE 04-147 REV 00
26	2/27/04	JM	BCS	SAK	INCORP. MSE 03-0180 REV 00. PARTIAL INCORP. DCR 97-13, DCN-00
25	11/3/03	JM	BCS	MR	INCORP. MSE 03-0205 REV 00
24	8/18/03	MPW	JM	JGC	INCORP. MMOD 01-537 DCN 00
23	7/14/03	BCS	JM	JGC	PARTIAL INCORP. MMOD 01-537 DCN 00
22	6/17/03	MPW	JM	JC	PARTIAL INCORP. MMOD 01-537 DCN 00
21	12/19/02	BCS	JM	DEA	INCORP. MSE 02-0216 REV.0
20	5/29/02	BCS	MPW	RRB	INCORP. MSE 00-0247 REV.0, CR 01-09349
19	9/15/00	BCS	MPW	JCM	INCORP. MMOD 99-626 DCN-00
18	8/22/00	BCS	DWS	JCM	PARTIAL INCORP. MMOD 99-626 DCN-00
17	1/20/97	BCS	DWS	RWM	INCORP. MMOD 96-669 CA-0
16	1/31/96	BCS	MPW	RSG	INCORP. MMOD 95-570 CA-0
15	9/14/95	BCL	MPW	JCM	INCORP. MMOD 95-552 CA-0
14	1/17/95	BCL	DWS	WFZ	INCORP. DCR 93-16 CA-21
13	3/24/93	MRB	BCL	WFZ	INCORP. DCR 93-16 CA0,01
12	3/24/93	BCL	MRB	JCM	REINCORP. DCR-91-31, CA-0
11	2/12/93	BCL	MRB	JCM	INCORP. DCR-91-31, CA-0
10	1/25/93	BCL	MRB	JCM	PARTIAL INCORP. DCR-91-31, CA-0
9	5/11/92	MRB	BCL	GPM	INCORP. MMOD 90-582 CA00
8	7/18/91	MRB	JM	GRM	INCORP. MMOD 90-582 CA00
7	11/7/88	GPM	MRB	RRC	INCORP ECA 74/1131738 REVISED NOTE 3 ADDED: FILTERS 8000, 8001 & 8002 PER EP 20441, V204 PER UE & C P & ID 202093, NOTE 9 & INCOMPLETE ITEM 1. CHANGED VALVES V1180 & V1181 FROM GATE TO GLOBE VALVES PER ECA 99/1172676. CHANGED VALVES V293, V294 & V291 FROM GATE TO GLOBE VALVES AND CORRECTED VALVE TAG NO. PER ECA 99/1002C.
6	8/26/87	MPW	BCL	RRC	INCORP DCR 87-034.
5	6/1/87	MPW	DWS	VWS	INCORP ECA 19/1185678
0	3/21/86	TAK	JDM	WFD	ISSUED FOR OPERATIONS & INCORP. ECA 74/1131738

REF. DRAWING NO.	REV	TITLE
9763-F-202107	12	COMP. AIR HEADERS TURB. BLDG. P & ID
9763-F-202106	11	COMPRESSED AIR SYS. P & ID
9763-F-202105	11	COMPRESSED AIR SYS. KEY PLAN P & ID

FPL ENERGY Seabrook Station

SERVICE AIR SYSTEM TURBINE BUILDING DETAIL

PID- 1-SA-B20650

11/10/08

PID- 1-SA-B20651

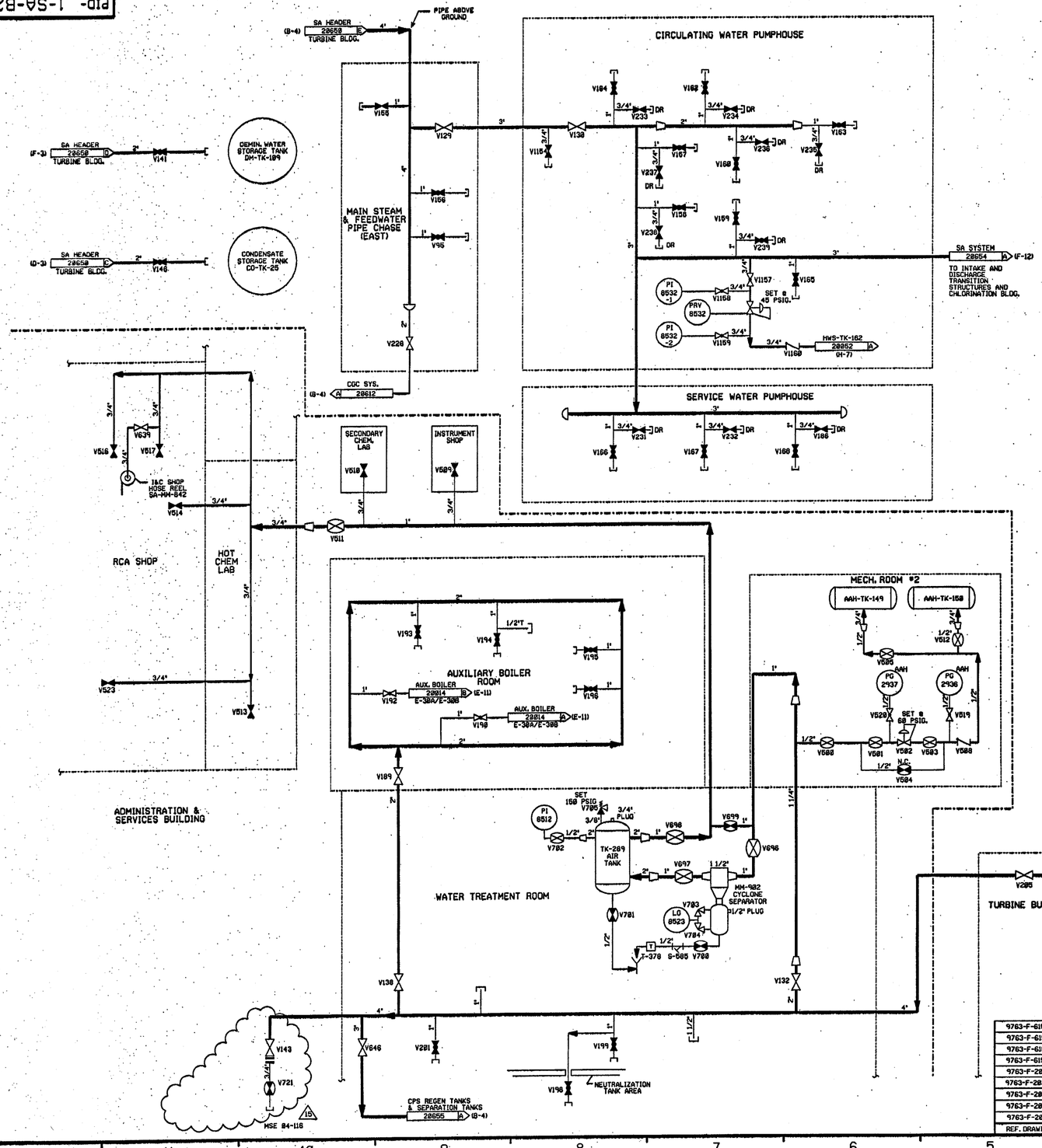

FOR P&ID REFERENCE DRAWINGS, SYMBOLS AND ABBREVIATIONS REFER TO DRAWINGS P&ID - LEGEND 1 AND P&ID - LEGEND 2

NOTES:

1. WORK THIS DRAWING WITH DRAWINGS 28649, 28658, 28652, 28653 & 28654.
2. ALL LINES, EQUIPMENT, COMPONENTS AND INSTRUMENTS HAVE SYSTEM PREFIX SA, UNLESS NOTED OTHERWISE.
3. ALL PIPING IS SAFETY CLASS NNS UNLESS NOTED OTHERWISE.
4. ALL PIPING RUNNING BETWEEN BUILDINGS OR TO OUTSIDE EQUIPMENT IS BELOW GROUND EXCEPT AS NOTED.
5. △INDICATES REVISION LEVEL.
6. PIPE CAPS OR QUICK DISCONNECTS MAY BE INSTALLED ON SERVICE AIR STATIONS AS DEEMED NECESSARY BY STATION STAFF.
7. VALVE SYMBOL MAY NOT BE REPRESENTATIVE OF INSTALLED COMPONENT TYPE, REFER TO THE VALVE LIST.

REF. DRAWING NO.	REV	TITLE
9763-F-615022	12	ADMIN & SERVICE BLDG, FIRST FLR SHT 1
9763-F-615015	11	ADMIN & SERVICE BLDG, HVAC/MECH RM 2
9763-F-615012	9	ADMIN & SERVICE BLDG SECT/DETAIL SHT 2
9763-F-615025	10	ADMIN & SERVICE BLDG SECT/DETAILS SHT 1
9763-F-282112	4	WATER TREATMENT P & ID
9763-F-282099	12	AUX. BOILER SYS. P & ID
9763-F-282189	9	COMP AIR HEADERS, MISC BLDGS P&ID
9763-F-282188	15	COMP AIR HEADERS MISC BLDGS P&ID
9763-F-282185	11	COMP AIR SYS KEY PLAN P&ID

REV	DATE	DSGN	CHKD	CE	DESCRIPTION
15	9/6/05	BCS	JM	DGR	INCORP MSE 84-116 REV. 0
14	4/28/05	BCS	JM	PAL	INCORP DCR 97-13 DCN 00, 35, 77
13	2/27/04	JM	BCS	SAK	PARTIAL INCORP DCR 97-13 DCN 77
12	7/27/99	MPW	BCS	DJM	INCORP DCR 97-12 DCN 00
11	10/7/98	DWS	BCS	RSG	INCORP MMOD 978528 DCN*00 & 03
10	11/7/97	MPW	BCS	RCP	INCORP DCR 94-51 DCN 04
9	1/31/96	BCS	MPW	RSG	INCORP MMOD 95-578 CA0
8	8/3/94	DWS	BCL	WFZ	INCORP DCR 930887 CA*10
7	5/28/94	BCL	MPW	JCM	INCORP MMOD 93-564 CA0
6	8/28/92	MRB	BCL	GPH	INCORP MMOD 91-622 CA0
5	7/23/92	DWS	MRB	WFZ	INCORP DCR 900852 CA*8, 8)
4	4/23/92	RMC	DWS	JEV	INCORP DCR 91-26 CA5 AND MMODS 91-515 CA0 & 91-622 CA0
3	6/1/87	MPW	DWS	VWS	INCORP ECA 19/1185678
2	11/21/86	FJR	PAL	RRC	ADDED: REF DWGS, BLDG BOUNDARY & CONT FLAG COORD'S. CORRECTED DRAFT-ING ERRORS PER UE&C EXCTION ISO & P&ID.
1	3/25/86	TAK	JDM	WFD	DELETED V8801 PER DR 82/383A
0	3/21/86	TAK	JDM	WFD	ISSUED FOR OPERATIONS & INCORP. ECA 19/1185678 & UCR 82/222

FPL ENERGY Seabrook Station

SERVICE AIR SYSTEM MISC. BUILDINGS DETAIL

PID- 1-SA-B20651

09/02/05

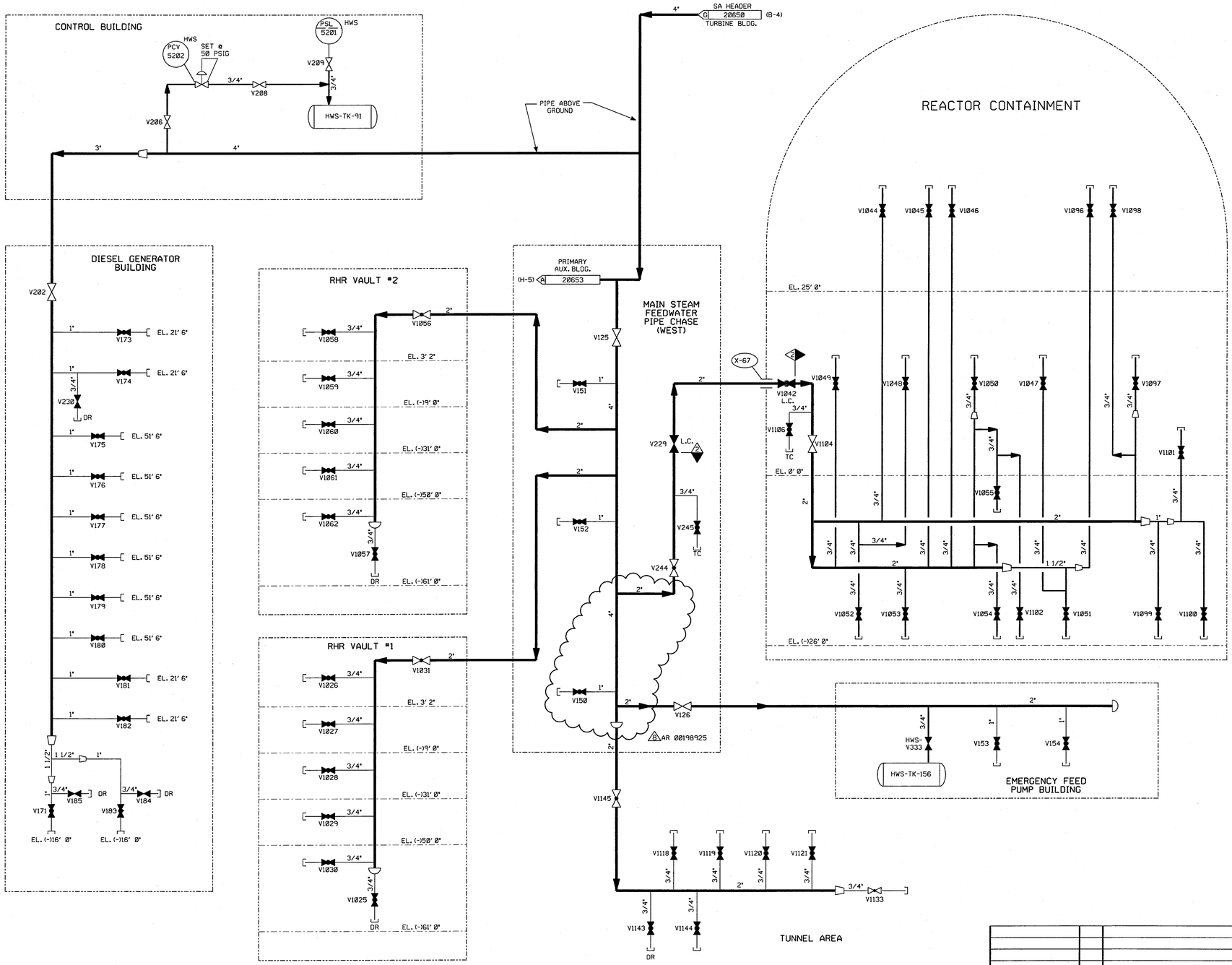

FOR P&ID REFERENCE DRAWING, SYMBOLS AND ABBREVIATIONS REFER TO DRAWINGS P&ID - LEGEND 1 AND P&ID - LEGEND 2.

NOTES:

1. WORK THIS DRAWING WITH DRAWINGS 20649, 20650, 20651 & 20653.
2. ALL LINES, EQUIPMENT, COMPONENTS AND INSTRUMENTS HAVE SYSTEM PREFIX SA, UNLESS NOTED OTHERWISE.
3. ALL PIPING IS SAFETY CLASS NNS UNLESS NOTED OTHERWISE.
4. ALL PIPING RUNNING BETWEEN BUILDINGS OR TO OUTSIDE EQUIPMENT IS BELOW GROUND EXCEPT AS NOTED.
5. △ INDICATES REVISION LEVEL.
6. DELETED.
7. PIPE CAPS OR QUICK DISCONNECTS MAY BE INSTALLED ON SERVICE AIR STATIONS AS DEEMED NECESSARY BY STATION STAFF.
8. VALVE SYMBOL MAY NOT BE REPRESENTATIVE OF INSTALLED COMPONENT TYPE, REFER TO VALVE LIST.

PORTIONS OF THIS DRAWING ARE

NUCLEAR SAFETY RELATED

REV	DATE	DSGN	CHKD	CE	DESCRIPTION
8	9/14/09	GPS	JTM	BCS	INCORPORATED: AR NO. 00198925
7	02/05/03	BCS	MPW	SPF	INCORPORATED: MSE 99-332 REV. 0, 1 & CR 02-13862
6	6/31/96	BCS	MPW	RSG	INCORPORATED: MMOD 95-570 CA0
5	5/11/92	MRB	BCL	GPM	INCORPORATED: MMOD 91-622 CA0
4	9/11/90	MRB	HP	RRC	INCORPORATED: MMOD 90-595 CA00
3	6/1/87	MPW	DWS	RRC	ADDED ERECTION ISO NO & CONT LOCATION AND INCORP ECA 19/118567B.
2	10/24/86	PAL	WRD	PHH	DELETED NOTE 6, UPDATED REF DWG REV'S. ADDED ZONE LOC TO FLAG.
1	6/16/86	TAK	MPW	RRC	REVISED CHANGE ITEM NO.1 PER 20208 REV 16
0	3/21/86	TAK	JDM	WFD	ISSUED FOR OPERATIONS

REF. DRAWING NO.	REV	TITLE
9763-F-804989	7	SERVICE AIR P & I DIAGRAM
9763-F-604103	9	DIE. GEN BLDG & CONT. BLDG HWS SYS P&ID
9763-F-202109	9	MISC. BLDG. COMP. AIR SHT 2 OF 2 P&ID
9763-F-202108	16	MISC. BLDG. COMP. AIR SHT 1 OF 2 P&ID
9763-F-202105	11	COMP. AIR SYS. KEY PLAN P&ID

NEXTera ENERGY SEABROOK

SEABROOK STATION

SERVICE AIR SYSTEM
MISC. BUILDINGS
DETAIL

PID- 1-SA-B20652

06/11/09

PID- 1-SA-B20653

WASTE PROCESS BUILDING

PRIMARY AUXILIARY BUILDING

FUEL STORAGE BUILDING

FOR P&ID REFERENCE DRAWINGS, SYMBOLS AND ABBREVIATIONS REFER TO DRAWINGS P&ID - LEGEND 1 AND P&ID - LEGEND 2

NOTES:

1. WORK THIS DRAWING WITH DRAWINGS 20649, 20650, 20651, & 20652.
2. ALL LINES, EQUIPMENT, COMPONENTS AND INSTRUMENTS HAVE SYSTEM PREFIX SA, UNLESS NOTED OTHERWISE.
3. ALL PIPING IS SAFETY CLASS NNS UNLESS NOTED OTHERWISE.
4. ALL PIPING RUNNING BETWEEN BUILDING OR TO OUTSIDE EQUIPMENT IS BELOW GROUND EXCEPT AS NOTED.
5. △ INDICATES REVISION LEVEL.
6. DELETED
7. PIPE CAPS OR QUICK DISCONNECTS MAY BE INSTALLED ON SERVICE AIR STATIONS AS DEEMED NECESSARY BY STATION STAFF.
8. VALVE SYMBOL MAY NOT BE REPRESENTATIVE OF INSTALLED COMPONENT TYPE, REFER TO VALVE LIST.

REV	DATE	DSGN	CHKD	CE	DESCRIPTION
10	1/13/11	GPS	JW	DEO	INCORP. EC-145040
9	2/13/03	MPW	BCS	JM	INCORP. CR 02-16892
8	1/31/96	BCS	MPW	RSG	INCORP. MMOD 95-570 CA-0
7	11/16/93	MRB	BCL	RSG	INCORP. DCR 90-60 CA0
6	6/17/93	MRB	BCL	VWS	INCORP. DCR 91-32 CA0
5	2/23/89	GPM	APL	GRM	INCORP. DCR 87-93CA-1
4	10/14/87	MPW	BCL	RRC	INCORP DCR 87/093
3	6/1/87	MPW	DWS	VWS	INCORP ECA 19/1185678
2	11/21/86	FJR	PAL	RRC	ADDED BLDG BOUNDARIES, DWG CONT FLGS, ELEV LEVEL & PIPE CAP PER UE&C ERECTION ISO, CORRECTED DRAFTING ERRORS PER UE&C P&ID, RELOCATED 3/4" LINE TO REFLECT ASBUILT CONDITION. DELETED NOTE 6.
1	6/18/86	JDM	DWS	RRC	CHG ITEMS 1 & 2 RESOLVED BY DR 82/322A, UPDATE REV DWG & REVISE ACCORDINGLY, DELETED CHANGE ITEM 3
0	03/21/86	TAK	JDM	WFD	ISSUED FOR OPERATIONS INCORP. ECA 19/808134A 19/1109836 74/80

NEXTera ENERGY SEABROOK

SEABROOK STATION

SERVICE AIR SYSTEM
MISC. BUILDINGS
DETAIL

PID- 1-SA-B20653

REF. DRAWING NO.	REV	TITLE
9763-F-900123	3	SERVICE AIR MITD
9763-F-900032	4	COMPRESSED AIR SYSTEM MITD
9763-F-804989	7	SERVICE AIR P & ID
9763-F-202105	11	COMPRESSED AIR SYS. KEY PLAN P & ID

01/11/11

PID- 1-SS-B20516

FOR P&ID REFERENCE DRAWINGS, SYMBOLS AND ABBREVIATIONS REFER TO DRAWINGS P&ID - LEGEND 1 AND P&ID - LEGEND 2

20520 (NUCLEAR-POST ACCIDENT)

REACTOR CONTAINMENT 20518 (NUCLEAR)

20519 (NUCLEAR)

20520

20518

20521

20522

WASTE PROCESSING BUILDING

PRIMARY AUXILIARY BUILDING

CONT. RECIRC. SUMP

BRS-TK-66B 28854 1/2"T
BRS-TK-66A 28854 1/2"T
BRS-TK-66A 28854 1/2"T
BRS-TK-66B 28854 1/2"T
3/8"T 3/8"T 3/4" 3/8"T 3/8"T
NO SYSTEM 28135 3/8"T
DEMIN. WATER 28351 3/8"T
1/2"T BRS-P-99A 28854
1/2"T BRS-P-99B 28854
CP-521
3/8"T
P-382

CP-419 POST-ACCIDENT SAMPLE PANEL
POST ACCIDENT SAMPLE SYSTEM HX E-186
3/8" T 1/4" T 3/8" T
1/4" T RC SS
DCR #1-0002

RC 3/8" T
RC 1/2"
RC 3/8" T PRZR STM 28848 RC-E-10
RC 1/2" RC 3/8" T PRZR. LIQ. 28848 RC-E-10
RC 1/2" RC 3/8" T RPV LOOP 3 28848 RC-E-11C
RC 1/2" RC 3/8" T RPV LOOP 1 28848 RC-E-11A
RC 1/2" RC 3/8" T PRT GAS 28848 RC-TK-11

E-13A PRZR. LIQ. SAMPLE HXS.
E-13B 3/8" T
E-12A PRZR. STM. SAMPLE HXS.
E-12B 3/8" T

CP-166A SAMPLE SINK

PDT 3/4" 28853 BRS-TK-66A & B
CVCT 3/8" T 3/4" 28720 CS-TK-1
LTDN. HX. CS 3/8" T CS 3/4" 28720
CAT. MB DEMIN. CS 3/8" T CS 3/4" 28720
RH HX. RH 3/8" T 28868 RH-E-9A & B
LTDN. DEGAS. CS 3/8" T CS 3/4" 28720 TR. CLR.
TH. REG. DEMIN. CS 3/8" T CS 3/4" 28720
DM DM 3/8" T DM 3/4" 28348

RM-SKD-83
RM-SKD-84
RM-SKD-85
RM-SKD-86
DM 3/4" 28348 (x4)
FTBC DISTR. HDR 1" 23826 A

E-14A 20625 3/8" T 3/8" T
E-14B 20625 3/8" T 3/8" T
STM. GEN. SAMPLE HXS. E-14C 20625 3/8" T 3/8" T
E-14D 20625 3/8" T 3/8" T

CP-166B SAMPLE SINK

SKD-128

NOTES:
1. WORK THIS DRAWING WITH DRAWINGS 20518 THRU 20522.
2. ALL LINES, EQUIPMENT, COMPONENTS AND INSTRUMENTS HAVE SYSTEM PREFIX SS, UNLESS NOTED OTHERWISE.
3. △ INDICATES REVISION LEVEL

REV	DATE	DSGN	CHKD	CE	DESCRIPTION
5	1-10-02	MPV	JML	EES	INCORP. DCR #1-0002 DCN 08
4	5/31/90	MRB	RMB	IW	INCORP. MMOD 89-588 CA 01
3	5/26/89	MRB	PAL	IW	INCORP. DCR 87-118 CA 11. REVISED NOTE 2. ADDED LEGEND REFERENCE NOTE
2	4/21/89	GPM	APL	GRM	REVISED NOTE 1. INCORP. DCR 88-81 CA #2
1	2/2/87	WDS	WRD	WMS	REVISED PER LATEST SYSTEM DRAWINGS. ADDED NOTE 3
0	12/21/85	DWS	DWS	WFD	ISSUED FOR OPERATIONS

REF. DRAWING NO.	REV	TITLE
9763-F-805635	6	EQUIP. VENT SYS. HYDROGENATED, P&ID
9763-F-805825	12	SAMPLE SYS. NUCLEAR P&ID SHT. 1
9763-F-805824	13	STM. GEN. BLOWDOWN SYS. P&ID
9763-F-804978	5	SAMPLE SYS. NUCLEAR-POST ACCIDENT P&ID
9763-F-804977	8	SAMPLE SYS. NUCLEAR, P&ID SHT. 2

North Atlantic Energy Service Corporation

SEABROOK STATION

SAMPLE SYSTEM OVERVIEW

PID- 1-SS-B20516

01/10/02

PID-1-SS-B20518

INSIDE CONT. | TUNNEL AREA | PAB

FOR P&ID REFERENCE DRAWINGS, SYMBOLS AND ABBREVIATIONS REFER TO DRAWINGS P&ID - LEGEND 1 AND P&ID - LEGEND 2

PRIMARY SAMPLE PANEL SINK CP-166A 20519

E-12A PRZR. LIQ. & STM SAMPLE HX NNS

E-12B PRZR. LIQ. & STM SAMPLE HX NNS

E-13A RC LOOP 1 & 3 LIQ SAMPLE HX NNS

E-13B RC LOOP 1 & 3 LIQ SAMPLE HX NNS

PART OF 1-SS-CP-166A

LETDOWN DEGASIFIER

DETAIL A
SEE NOTE 12

NOTES:

1. WORK THIS DRAWING WITH DRAWINGS 20516, 20519 THRU 20522.
2. ALL LINES, EQUIPMENT, COMPONENTS AND INSTRUMENTS HAVE SYSTEM PREFIX SS, UNLESS NOTED OTHERWISE.
3. ALL SAMPLE INSTRUMENTATION INDICATION SHALL BE LOCATED ON A PANEL AT THE SAMPLE SINK.
4. REACH ROD OPERATED FROM THE SAMPLE ROOM SIDE OF THE SAMPLE HX. ROOM-SAMPLE WALL.
5. THIS VALVE SHALL BE ADJUSTED AND SET TO GIVE A 0.8 GPM SAMPLE FLOW FROM RPV LOOP 1 OR 3.
6. ALL FLOW INDICATORS ON SS-CP-166A & B HAVE INTEGRAL NEEDLE VALVES WHICH ARE NOT SHOWN ON THE P&ID.
7. ⬡ TYPICAL CONNECTION IDENTIFICATION FOR SS-CP-166A & B
8. DELETED
9. △ INDICATES REVISION LEVEL.
10. VENTS, DRAINS AND TEST CONNECTION CODEBREAKS ARE AT THE DOWNSTREAM END OF THE OUTER ISOLATION VALVE PER 1-NHY-8051 UNLESS OTHERWISE NOTED.
11. VALVE DISABLED IN THE LOCKED CLOSED POSITION BY LOCKING BREAKERS B4T & B4U OPEN.
12. SAMPLE BOMBS AND SEPTUMS ARE INSTALLED DURING SAMPLING FUNCTIONS. EITHER THE SAMPLE BOMB OR THE SAMPLE SEPTUM MAY BE USED, SEE DETAIL A (A-6).

PORTIONS OF THIS DRAWING ARE
NUCLEAR SAFETY RELATED

REV	DATE	DSGN	DRWN	CHKD	CDE	SES	DESCRIPTION
12	R/2/E2	BCS	—	PA	—	DHO	INCORP DCR 98-081 DCN#28
11	6/13/97	DWS	—	MPW	FAC	DHO	INCORP DCR 97A008 DCN#28
10	12/9/94	DWS	—	BCL	MPW	MHO	INCORP MHOD 930545 CA#8
9	4/21/93	MRB	—	BCL	DWS	JEV	INCORP MHOD 93-515 CA8
8	5/23/90	MRB	FCB	JM	CDM	BCL	INCORP MHOD 90-586 CA84
7	8/25/89	MRB	FCB	JM	APL	WFD	RE-INCORP DCR 87-76 CA81
6	8/21/89	MRB	JM	APL	BCL	GLM	INCORPORATED MHOD 89-555 CA 88
5	12/28/88	MRB	FCB	PAL	APL	ES	INCORP. DCR'S 86-113 CA81, 87-268 CA5, 87-76 CA1 REVISED: NOTE 4.6, DELETED: NOTE 8, ADDED: REACH ROD SYMBOL TO VALVES V199 & V281 PER NOTE 4.
4	2/1/88	GPH	RHC	MRB	APL	DJM	INCORPORATED DRR 88-51 REV 1 REVISED: NOTES 1 & 2
3	3/22/88	GPH	RHC	BCL	APL	RAC	REVISED: EQUIP. TITLES INCORP: ECA 85/114987B, NOTE 10 ADDED: EQUIPMENT SAFETY CLASS DELETED: INCOMPLETE ITEM
2	10/9/86	JDH	DWS	MAP	BCL	RAC	ADDED NOTE 10 & DELETED CODE BREAKS, REVISED VALVE NUMBERS, LOCATION OF V321, ADDED V343, V344, CONFIGURATION & V313 TAG NO. REVISED VALVE END CONN'S, CORRECTED INCORP. ECA 79/1184736 LOCATION OF FLEX HOSE FROM UPSTR OF FV-2848 TO UPSTR OF FV-2876. ADDED NOTE 9 , PARTIAL INCORP OF ECA 86/114987B, ADDED V313 TAG NO, & OMITTED ON PREVIOUS REV.!
1	5/22/86	DWS	WES	MLH	—	GFS	GENERAL REV. INCORP. ECA 85/085114AB 49/112-18A, REVISED NOTE 8
0	1/3/86	DWS	MRB	DJH	JMC	WFD	INCORP. ECA 80/108954 ISSUED FOR OPERATIONS

North Atlantic Energy Service Corporation

SEABROOK STATION

SAMPLE SYSTEM (NUCLEAR-NORMAL OPERATION) DETAIL

PID- 1-SS-B20518

REF. DRAWING NO.	REV	TITLE
9763-F-895825	12	SAMPLE SYS NUCLEAR P&ID SHT 1

08/22/02

PID- 1-SS-B20519

PRIMARY SAMPLE PANEL
CP-166A

FOR P&ID REFERENCE DRAWINGS, SYMBOLS AND ABBREVIATIONS REFER TO DRAWINGS P&ID - LEGEND 1 AND P&ID - LEGEND 2

NOTES :

1. WORK THIS DRAWING WITH DRAWING 20516, 20518, 20520 THRU 20522.
2. ALL LINES, EQUIPMENT, COMPONENTS AND INSTRUMENTS HAVE SYSTEM PREFIX 'SS', UNLESS OTHERWISE NOTED.
3. ALL TUBING 3/8" T AND MAT'L 2S00 UNLESS OTHERWISE NOTED.
4. DELETED
5. DELETED
6. THESE REDUCERS ARE TO BE AS CLOSE AS POSSIBLE TO ROOT VALVE.
7. ✱THIS VALVE TO BE REACH ROD OPERATED FROM THE SAMPLE RM SIDE OF THE SAMPLE HX ROOM -SAMPLE WALL.
8. THIS EQUIPMENT HAS 1/4" TUBING CONNECTORS.
9. △ INDICATES REVISION LEVEL. DCR 99-0818 (3)
10. DELETED.
11. ⬡ CONTINUATION CONNECTION, SEE FP-74082.

PORTIONS OF THIS DRAWING ARE
NUCLEAR SAFETY RELATED

REV	DATE	DSGN	DRWN	CHKD	CDE	SES	DESCRIPTION
10	11-15-99	BCS	——	DWS	MPW	RWS	INCORP. DCR 99-0818 DCN-00, 01
9	8/18/97	MPW	——	BCS	DWS	VWS	INCORP. MMOD 96-550 DCN 01
8	8/3/95	DWS	——	BCL	MPW	RPC	INCORP. MMOD 920550 CA#0
7	9/3/91	GPM	FCB	JM	MRB	RRC	INCORP. MMOD 90-597 CA01
6	5/23/91	MRB	RMC	JM	CDM	BCL	INCORPORATED MMOD 90-586 CA04
5	1/4/91	MRB	RMC	JM	DWS	BCL	INCORPORATED MMOD 90-639 CA01
4	2/23/90	MRB	JM	APL	MPW	IW	INCORPORATED DCR 87-76, CA01
3	2/1/89	GPM	RMC	MRB	APL	DJM	INCORPORATED DRR 88-51 REV 1 REVISED: DWG CONT NUMBER, NOTES 1 & 2 ADDED, P & ID LEGEND NOTE, NOTE 9 DWG CONT COORD'S & SYSTEM INTERFACE DELETED: NOTES 4 & 5, NNS-1 CL BOUNDARY, INCOMPLETE ITEM ECA 85/1149878 SUPERCEDED BY DRR 88-51.
2	9/17/86	BCL	TAK	MAP	VNK	RRC	RE-INCORP. PORTION OF ECA 85/114987B (ECA REMAINS AS PARTIALLY INCORPORATED)
1	8/12/86	JDM	TAK	WRD	BCL	RRC	INCORP. ECA 85/114987A AND PARTIAL INCORP. ECA 85/1149878, REV PER VENDOR FP-7144B, ADDED NOTE 8.
0	12/31/85	DWS	MRB	JDM	JVC	WFD	ISSUED FOR OPERATIONS

REF. DRAWING NO.	REV	TITLE
9763-F-805025	12	SAMPLE SYSTEM NUCLEAR P&ID SHT 1
9763-F-804977	8	SAMPLE SYSTEM NUCLEAR P&ID SHT 2

North Atlantic Energy Service Corporation

SEABROOK STATION

SAMPLE SYSTEM
PRIMARY SAMPLE PANEL
CP-166A

PID- 1-SS-B20519

11/12/99

PID- 1-SS-B20521

E-14A STM GEN SAMPLE HX NNS
E-14B STM GEN SAMPLE HX NNS
E-14C STM GEN SAMPLE HX NNS
E-14D STM GEN SAMPLE HX NNS

CP-166B

SGBD SB-3/8"-T 20626 I (F-12) SG LOOP 1
SGBD SB-3/8"-T 20626 J (F-12) SG LOOP 2
SGBD SB-3/8"-T 20626 K (E-12) SG LOOP 3
SGBD SB-3/8"-T 20626 L (E-12) SG LOOP 4

CC-1" 20206 (G-11) CCW LOOP A
CC-1" 20206 (G-11) CCW LOOP A
CC-1" 20206 (F-11) CCW LOOP A
CC-1" 20206 (F-11) CCW LOOP A

S/G A SAMPLE CONST TEMP COOLER E-173 NOTE 7
S/G B SAMPLE CONST TEMP COOLER E-174 NOTE 7
S/G C SAMPLE CONST TEMP COOLER E-175 NOTE 7
S/G D SAMPLE CONST TEMP COOLER E-176 NOTE 7

VAR. PRESS. REG. ELEMENT NOTE 7

F-177 NOTE 12
F-178 NOTE 12
F-179 NOTE 12
F-180 NOTE 12

50 PSIG BACK PRESSURE REGULATOR

SET @ 15 PSIG
SET @ 20 PSIG
SET @ 75 PSIG (TYP)

CATION COND.

S/G SAMPLE SINK MM-741

12 PSIG PRESSURE REGULATOR (MAKE UP WATER SUPPLY)

1-SB-SKD-167 (D-1) A DETAIL 'A' THIS DRAWING

TO WLD SYSTEM (D-6) F 20222 DR-213

FROM DM SYSTEM F 20519 (A-6)

WLD DR 256 (E-11) A 20222

PAB EL. 25'-0"
RCA WALKWAY EL. 25'-0"
WLD DR 256 20222 (E-11) B
FTBC. DISTR. HDR 20626 R (C-10) SB

SET PRESS. @ 135 PSIG NOTE 7
PCV 2771 V790 V37 VAR. PRESS. REG. ELEMENT
PCV 2770 V791 V35 VAR. PRESS. REG. ELEMENT
PCV 2769 V792 V33 VAR. PRESS. REG. ELEMENT
PCV 2768 V793 V31 VAR. PRESS. REG. ELEMENT

3/4" RM-SKD-83
3/4" RM-SKD-84
3/4" RM-SKD-85
3/4" RM-SKD-86

DM-3/4" A 20350 (H-10)
DM-3/4" Z 20350 (H-10)
DM-3/4" Y 20350 (G-10)
DM-3/4" X 20350 (G-10)

SKD-128
CONDENSER E-182
RECEIVER TK-262
COMPRESSOR C-12
EVAPORATOR E-183
ACCUMULATOR TK-299
RESERVOIR TK-244
RECIRC. PUMP P-376
MIXER MM-948
HOT GAS BY-PASS
FILTER DRIER F-201
SIGHT GLASS

FLEX HOSE MM-939 3/4" 1"
FLEX HOSE MM-938 3/4" 1"

TO WLD SYSTEM (D-6) 20222 DR-213
TO SB SYSTEM F 20626 (B-12)
SAMPLE DRAINS (A-8) DETAIL 'A' C THIS DRAWING
1-SS-MM- 741 (A-12) DETAIL 'A' A THIS DRAWING
SAMPLE DRAINS (A-8) DETAIL 'A' B THIS DRAWING
1-SB-SKD-167
DETAIL 'A'

FOR P&ID REFERENCE DRAWINGS, SYMBOLS AND ABBREVIATIONS REFER TO DRAWINGS P&ID - LEGEND 1 AND P&ID - LEGEND 2

NOTES:

1. WORK THIS DRAWING WITH DRAWINGS 20516, 20518, 20519, 20520 & 20522.
2. ALL LINES, EQUIPMENT COMPONENTS AND INSTRUMENTS HAVE SYSTEM PREFIX SS, UNLESS NOTED OTHERWISE.
3. ALL TUBING 3/8" T AND MATL CLASS 2508 UNLESS NOTED OTHERWISE.
4. SEE DWG 20518 FOR ADDITIONAL NOTES.
5. LOW CRACKING PRESSURE VALVE.
6. ONLY ONE S/G AT A TIME IS LINED UP TO THE SACC ANALYZER
7. THIS EQUIPMENT HAS 1/4" TUBING CONNECTIONS.
8. DISPOSE OF COOLANT IN A PROPER CONTAINER FOR OFF SITE DISPOSAL. DO NOT DIRECT TO FLOOR DRAINS.
9. DRAINS ARE SLOPED TO OUTLET CONNECTION (*B).
10. ALL LINES, EQUIPMENT, COMPONENTS AND INSTRUMENTS ARE SAFETY CLASS NNS UNLESS NOTED OTHERWISE.
11. △ INDICATES REVISION LEVEL.
12. FILTER ELEMENTS OF THE FOLLOWING FILTERS MAY BE OPTIONALLY INSTALLED PER THE DIRECTION OF CHEMISTRY: 1-SS-F-177, 178, 179, 180

REV	DATE	DSGN	CHKD	CE	DESCRIPTION
18	9/21/10	JM	MPW	SAK	REVISED TO ELECTRONICALLY INCORP EC*12718 PER AR*578748
17	9/9/10	BCS	MW	SAK	INCORP. EC*12718
16	6/9/10	JM	MPW	SAK	INCORP. EC*12718
15	12/6/01	BCS	MPW	DEA	INCORP. MSE 01-0231 REV. 00
14	6/22/01	JM	BCS	SB	INCORP. DCR 00-0028, DCN-00, 05
13	11-2-95	BCL	MPW	RCP	INCORP. DCR 92-42 CA04, 5
12	8/25/93	MRB	BCL	JWB	INCORP. DCR 90-39 CA08

REF. DRAWING NO.	REV	TITLE
9763-M-506815	3	SS-DGBD RAD MONITERING CONTROL LOOP DIA
9763-F-805025	12	SAMPLE SYSTEM NUCLEAR P&ID SHEET 1
9763-F-804977	8	SAMPLE SYSTEM NUCLEAR P&ID SHEET 2

NEXTera ENERGY SEABROOK

SEABROOK STATION

SAMPLE SYSTEM
STEAM GENERATOR
SAMPLE PANEL 166B P&ID

PID- 1-SS-B20521

09/21/10

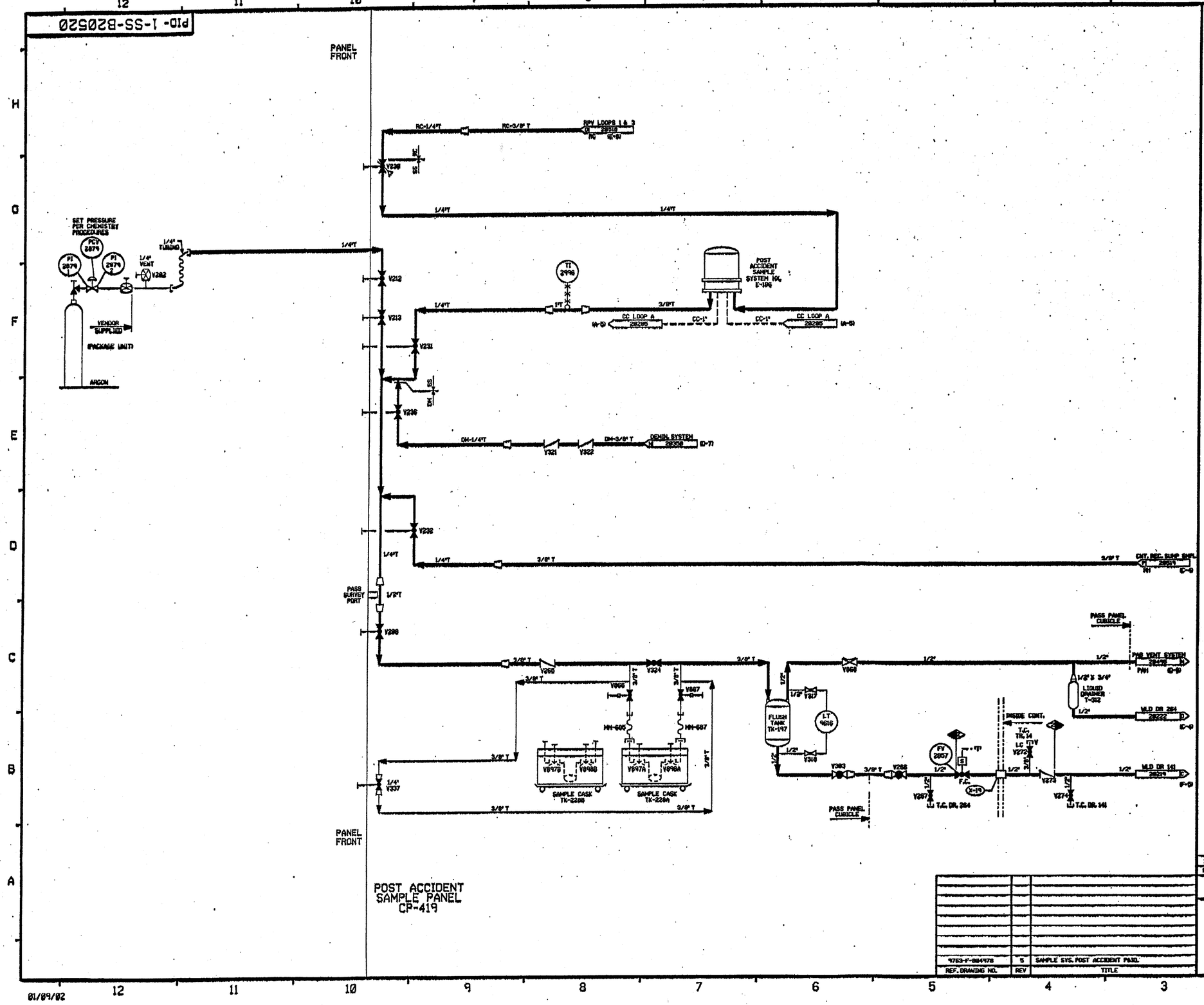

FOR P&ID REFERENCE DRAWINGS, SYMBOLS AND ABBREVIATIONS REFER TO DRAWINGS P&ID - LEGEND 1 AND P&ID - LEGEND 2

NOTES:

1. WORK THIS DRAWING WITH DRAWINGS 20516, 20518, 20519, 20521 AND 20522.
2. ALL PIPING, VALVES, EQUIPMENT, AND INSTRUMENTS HAVE SYSTEM PREFIX SS, UNLESS NOTED OTHERWISE.
3. VENT AND DRAIN CODE BREAKS ARE AT THE DOWNSTREAM END OF THE OUTER ISOLATION VALVE PER 1-NHY-005111, UNLESS NOTED OTHERWISE.
4. △ INDICATES REVISION LEVEL.
5. MAINTAIN LEVEL OF DEMIN. WATER IN REFERENCE LEG.
6. ALL LINES, EQUIPMENT, COMPONENTS AND INSTRUMENTS ARE SAFETY CLASS NNS, UNLESS NOTED OTHERWISE.
7. QUICK DISCONNECT COUPLINGS.

PORTIONS OF THIS DRAWING ARE

NUCLEAR SAFETY RELATED

REV	DATE	DSGN	CHKD	CE	DESCRIPTION
13	1-10-02	HPW	JM	ZZB	REVISED ENTIRE PID PER DCR 01-002 DCN 00

REF. DRAWING NO.	REV	TITLE
9763-F-004978	5	SAMPLE SYS. POST ACCIDENT P&ID.

North Atlantic Energy Service Corporation

SEABROOK STATION

SAMPLE SYSTEM (NUCLEAR-POST ACCIDENT) DETAIL

PID- 1-SS-B20520

01/09/02

P10- 1-WLD-B20216

1-WLD-B20224

MULTIPLE DRAINS
SUMP B P-77B
SUMP A P-23B
SUMP C P-77C
CHEMICAL DRAIN TANK TK-86
P-141 CHEMICAL DRAIN TRANSFER PUMP
RCA WALKWAY BETWEEN UNIT 1 & UNIT 2
ADMIN. SERVICES BLDG.
RCA WALKWAY - UNIT 1

1-WLD-B20225 THRU 1-WLD-B20229

DR 471
SB-P-232 20626 WASTE HOLDUP SUMP
CHEMICAL DRAIN TREATMENT TANK TK-87B
CHEMICAL DRAIN TREATMENT TANK TK-87A
A-5 CHEMICAL DRAIN MIXER
P-142 CHEMICAL DRAIN TREATMENT PUMP
FLOOR DRAIN TANK STRAINER S-7
FLOOR DRAIN TANK TK-59A
FLOOR DRAIN TANK TK-59B
TO WL SYSTEM 20828
SUMP B P-181C & D
SUMP A P-181A & B

1-WLD-B20222 1-WLD-B20223

DCR 488
FROM CC SYSTEM
CHROMATED WATER COLLECTION TANK TK-118
P-25B CHROMATED WATER PUMP
TO CC SYSTEM
SUMP A P-70A & B

PRIMARY AUXILIARY BLDG.

WASTE PROCESSING BLDG.

1-WLD-B20221

MULTIPLE DRAINS
SUMP B P-71C & D
SUMP A P-71A & B

RESIDUAL HEAT REMOVAL EQUIPMENT VAULT

1-WLD-B20218 1-WLD-B20219

REACTOR VESSEL & REACTOR COOLANT PUMPS SEALS LEAKOFFS
VALVE STEM LEAK OFF SYSTEM
REACTOR COOLANT DRAIN TANK TK-55
NG SYSTEM 20132
BRS-TK-68A & B 20853
REACTOR COOLANT DRAIN TANK HX E-43
P-33B
P-33A REACTOR COOLANT DRAIN TANK PUMPS
SUMP B P-5C & D
SUMP A P-5A & B
MULTIPLE DRAINS
CONTAINMENT TRENCH

CONTAINMENT

1-WLD-B20220

SUMP B P-72C & D
SUMP A P-72A & B
MULTIPLE DRAINS

FUEL STORAGE BLDG.

INCOMPLETE ITEMS

ITEM	NUMBER

NOTES:
1. WORK THIS DWG WITH DWGS 20218 THRU 20224.
2. ALL LINES, EQUIPMENT, COMPONENTS & INSTRUMENTS HAVE SYSTEM PREFIX WLD UNLESS NOTED OTHERWISE.
3. △ INDICATES DRAWING REVISION

REF. DRAWING NO.	REV	TITLE
9763-F-805619	11	WL STOR. & FILT.
9763-F-805644	1	WPB FLR. & EQUIP. DRN. SYS. SHT 2
9763-F-805617	10	WPB FLR. & EQUIP. DRN. SYS. SHT 1
9763-F-805633	9	WPB FLR. & EQUIP. DRN. SYS. SHT 4
9763-F-805634	3	WPB FLR. & EQUIP. DRN. SYS. SHT 5
9763-F-805645	2	WPB FLR. & EQUIP. DRN. SYS. SHT 3
9763-F-804995	7	RCA WALKWAY TUNNEL DRNS. & SUMPS
9763-F-805632	10	CHEMICAL DRAIN SYS. NUCLEAR
9763-F-804959	4	PAB FLR. & EQUIP. DRN. SYS. SHT. 2
9763-F-804992	10	PAB FLR. & EQUIP. DRN. SYS. SHT. 1
9763-F-804993	11	PAB FLR. & EQUIP. DRN. SYS. SHT. 3
9763-F-804958	5	RHR FLR. & EQUIP. DRNS. & FUEL STO. BLDG. SUMPS
9763-F-804994	8	CONT. FLR. & EQUIP. DRN. SYS. SHT. 1
9763-F-805040	13	REACTOR COOLANT DRN. TK. CNTMNT. BLDG.
9763-F-805191	4	VALVE STEM LEAKOFF SYS.-CONTAINMENT

REV	DATE	DSGN	DRWN	CHKD	CE	LDE	DESCRIPTION
2	8/30/87	WDS	DWS	JNM	BCL	RRL	INCORP DCR 488. REVISED REF DWG REVISIONS. ADDED NOTE 3. REMOVED "B" FROM DWG NO'S IN NOTE 1. REVISED PER LATEST SYSTEM DWG'S. ADDED LINE SIZES.
1	4/2/86	GD	SKN	JNM	DJM	WFD	ISSUED FOR OPERATIONS
0	3/29/86	MLS	RI	JNM	JWK	WFD	ISSUED FOR FIELD VERIFICATION

PSNH PUBLIC SERVICE OF NEW HAMPSHIRE

SEABROOK STATION

WASTE PROCESSING LIQUID DRAINS OVERVIEW

PID- 1-WLD-B20216

07/28/84

PID- 1-WLD-B20218

NHY P1D20218.DGN1

FOR P&ID REFERENCE DRAWINGS, SYMBOLS AND ABBREVIATIONS
REFER TO DRAWINGS P&ID = LEGEND 1 AND P&ID = LEGEND 2

NOTES:
1. WORK THIS DRAWING WITH DRAWINGS 20216, & 20219 THRU 20229.
2. ALL LINES, EQUIPMENT, COMPONENTS, AND INSTRUMENTS HAVE SYSTEM PREFIX WLD UNLESS NOTED OTHERWISE.
3. VALVES V69 THRU V73 ARE REACH ROD OPERATED.
4. ALL LINES, EQUIPMENT, COMPONENTS, AND INSTRUMENTS ARE SAFETY CLASS NNS, UNLESS NOTED OTHERWISE.
5. △ INDICATES REVISION LEVEL
6. REFER TO DRAWING VSL-20774 FOR VALVE LEAKOFFS.

PORTIONS OF THIS DRAWING ARE
NUCLEAR SAFETY RELATED

REV	DATE	DSGN	CHKD	CE	DESCRIPTION
14	4/21/08	JM	BCS	WD	INCORP MMOD 07-523 DCN 00
13	6/13/97	DWS	MPW	DMQ	INCORP DCR 970008 DCN#00
12	1/31/97	DWS	BCS	AM	INCORP DCR 970005 CA#0
11	11/27/95	MPW	BCS	DMQ	INCORP DCR 95-23 CA-6
10	11/13/95	BCS	MPW	RJF	PARTIAL INCORP DCR 95-23 CA-6
9	6-3-94	MPW	DWS	JLD	INCORP DCR 91-13 CA0 & DCR 93-23 CA 3
8	4-3-92	DWS	BCL	ES	INCORP DCR'S 90-3 CA0
7	9-24-91	MRB	RMC	JEV	INCORP. MMOD 91-610 CA0 REVISED NOTE 4 PER ENGINEERING DESIGN STANDARD 37160 SEC 3.0
6	4/20/88	MPW	BCL	RRC	REVISED: DRAIN LINES TO SUMP, CONTINUATION LETTER, REF. COORD AND DUPLICATED PIPING SHOWN IN PHANTOM.
5	7/2/87	GPM	PAL	VWS	REVISED: PIPING TO REFLECT AS INSTALLED CONFIG. ADDED: NOTE 6
4	2/27/87	WDS	PAL	VWS	INCORP. WR 87-W000155
3	1/19/87	MAP	PAL	VWS	ADDED VSL CONT FLAGS & REF COORD'S & WR TO 1IL. RELOCATED PIPING FROM V112 & V56, REMOVED CAPILLARY FROM PI 1418 & PI 1411 AND RELOCATED TE-401 PER AS-BUILT CONDITION. PLUGGED CONN. SHOWN PER UE&C ISOMETRIC. ADDED REF COORD TO REF FLAGS. UPDATED REF DWG BLOCK & ADDED NOTE 5.
2	6/17/86	TAK	BCL	RRC	ADDED REF. RWG. 884994
1	4/2/86	GD	JDM	WFD	ISSUED FOR OPERATIONS
0	3/29/85	MLS	JNM	WFD	ISSUED FOR FIELD VERIFICATION

9763-F-805040	13	REACTOR COOLANT DRAIN TK. CNTMNT. BLDG. P & ID
REF. DRAWING NO.	REV	TITLE

FPL ENERGY Seabrook Station

WASTE PROCESSING LIQUID DRAINS
REACTOR COOLANT SYSTEM

PID- 1-WLD-B20218

03/31/08

PID- 1-WLD-B20219

NHY-PID-20219.DGN1

FOR P&ID REFERENCE DRAWINGS, SYMBOLS AND ABBREVIATIONS REFER TO DRAWINGS P&ID - LEGEND 1 AND P&ID - LEGEND 2.

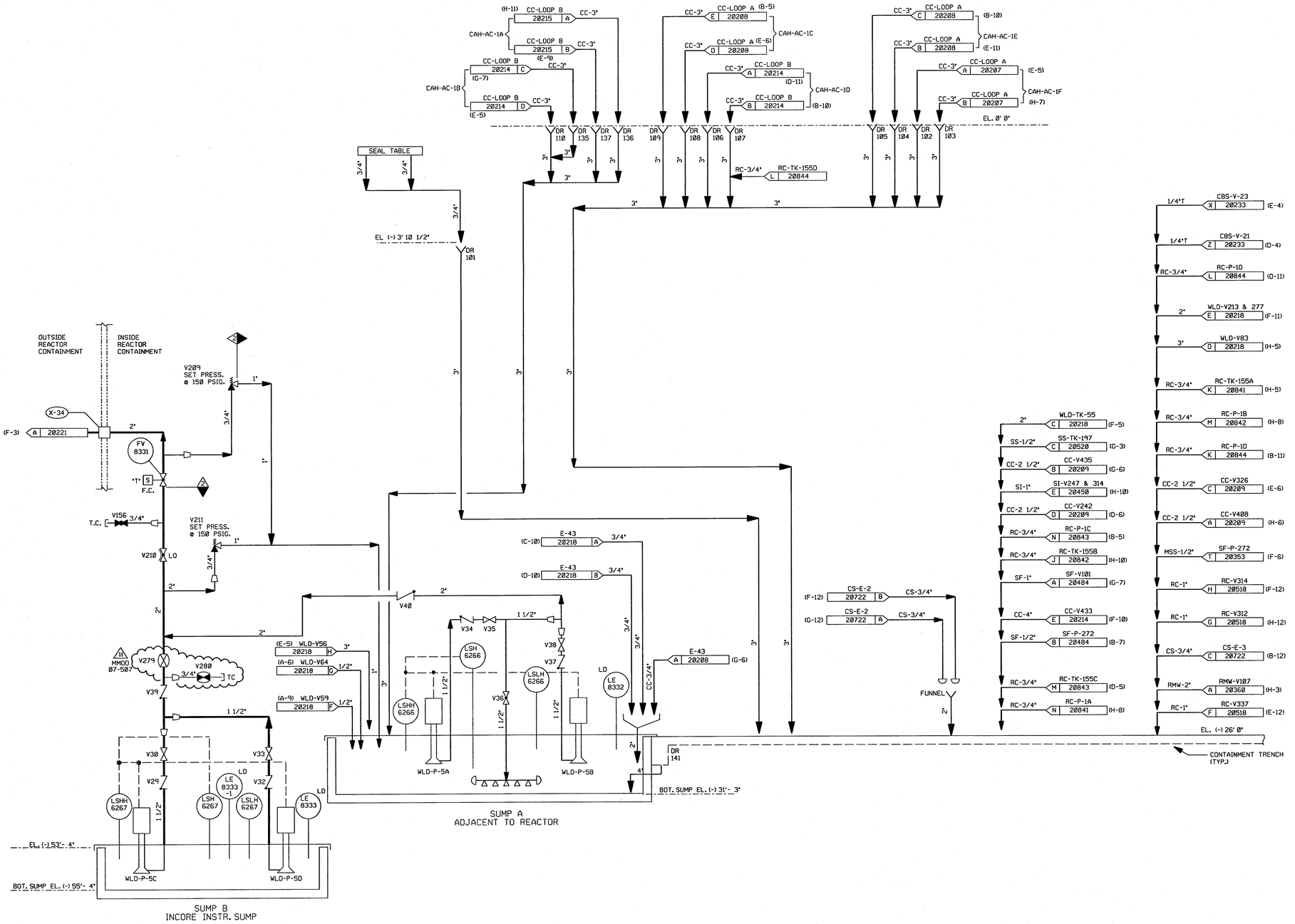

DRAINS SHOWN ON THIS DRAWING

101	106	135
102	107	136
103	108	137
104	109	141
105	110	

NOTES:

1. WORK THIS DRAWING WITH DRAWINGS 20216,20218 & 20220 THRU 20229.
2. ALL LINES, EQUIPMENT, COMPONENTS, AND INSTRUMENTS HAVE SYSTEM PREFIX WLD UNLESS NOTED OTHERWISE.
3. ALL LINES, EQUIPMENT, COMPONENTS, AND INSTRUMENTS ARE SAFETY CLASS NNS UNLESS NOTED OTHERWISE.
4. △ INDICATES REVISION LEVEL.
5. DELETED

PORTIONS OF THIS DRAWING ARE

NUCLEAR SAFETY RELATED

REV	DATE	DSGN	CHKD	CE	DESCRIPTION
11	4/14/08	JM	BCS	JME	INCORP MMOD 07-507 DCN 00.01
10	4/6/05	JM	MPW	RRB	INCORP MSE 04-196 REV 01.00
9	8/18/97	MPW	BCS	VWS	INCORP MMOD 96-550 DCN 01
8	6/13/97	DWS	MPW	DMQ	INCORP DCR 970008 DCN#00
7	1/17/97	DWS	MPW	DMQ	INCORP DCR 970002 CA#0 & 1
6	10/14/88	MRB	GPM	RRC	INCORP. NCR 86-60 REV 1 DELETED NOTE 5
5	4/20/88	MPW	BCL	RRC	ADDED: LINE SIZES; REVISED: DRAIN LINES TO SUMP A AND NOTE 3.
4	12/22/86	WDS	WRD	RRC	DELETED REF. DOC.,REVISED DRAFTING ERRORS, DRAIN LOC. FOR HX-E-43, ADDED DRAIN FOR RC-P-1D, NOTE 5 & DESIGNATION AND NCR 86/60A AS INCOMP. ITEM. INCORP NCR 86/111 REV.0 & NCR 86/112 REV.0
3	10/10/86	JDM	MPW	RRC	DELETED VQ DRAIN LINE, ADDED CONT. REF. LOCATIONS AND NOTE 4. INCORP'D ECA 19/118341A, 19/118443A
2	6/16/86	TAK	DWS	RRC	REMOVED CHANGE ITEM #1 PER ECA 19/108566A. INCORP. ECA 19/118102A & 74/102536B & C
1	4/2/86	GD	JDM		INCORP. ECA 19/108566A ISSUED FOR OPERATIONS
0	3/29/85	MLS	JNM	WFD	ISSUED FOR FIELD VERIFICATION

REF. DRAWING NO.	REV	TITLE
9763-F-804994	8	CNTMNT. FLR. & EQUIP. DR. SYS. SHT. 1 P & ID

FPL ENERGY Seabrook Station

WASTE PROCESSING LIQUID DRAINS CONTAINMENT BUILDING SUMPS

PID- 1-WLD-B20219

04/03/08

NMY P1D:28220.DGN:1

PID- 1-WLD-B20220

FOR P&ID REFERENCE DRAWINGS, SYMBOLS AND ABBREVIATIONS
REFER TO DRAWINGS P&ID - LEGEND 1 AND P&ID - LEGEND 2

SF-3/4" G 28482 (F-10)
SF-3/4" H SF-V58 28482 (E-10)
SF-3/4" D SF-V44 28482 (E-10)
SF-1" F SF-V-45 28482 (G-10)
SF-3/4" I SF-V70 28482 (F-10)
SF-3/4" J SF-V69 28482 (E-10)
SF-3/4" C SF-V71 28482 (F-10)
SF-1" E SF-V-74 28482 (G-10)

(A-11) FAH-F-41 828497 A DEMISTER DRAIN 2"
(C-11) FAH-F-74 828497 B DEMISTER DRAIN 2"

FL. EL. 64' 0"
DR 128 DR 127 DR 148 DR 126
FL. EL. 21' 0"
DR 138 DR 134
DR 131 DR 130 DR 129 DR 132
7'-9" FL. EL.
DR 133
4' 0" FL. EL.
8' 0" BOT. SUMP EL.

DCR 94-005 A
SF-3/4" C FROM 1-SF-P-10C 28482 (B-6)
DM-1"T P FROM 1-SS-SS-003 28482 (B-3)
SF-1/2" A SF-P-12 28483 (A-11)
SF-3/4" A SF-P-10B 28482 (C-5)
SF-3/4" B SF-P-10A 28482 (C-6)
CC-2" A CC-V-171 28212 (B-11)
CC-2" A CC-V-647 28205 (C-4)

SF-3/4" L SF-V184 20796 (E-4)
SF-1" K SF-V183 20796 (F-4)
SF-3/4" M SF-V185 20796 (E-4)
SF-3/4" N SF-V186 20796 (E-4)

FL. EL. 25' 0"
DR 139
2"
CD 1139 FL. EL. 28' 0"
3"

WL-TK-59A & B A 28223 (C-12) 2" 2"

V12 2" V13 2"
1 1/2" V8 V9 V11 V7 V10
LSHH 6273 LSH 6273 LSLH 6273
1 1/2" 1 1/2" 1 1/2"
10' 8" FL. EL.
6' 8" BOT. SUMP EL.
P-72C P-72D
SUMP B

DM-1" A DM-V82 28352 (B-6)
1 1/2" V15 V16 V18 V14 V17
LSHH 6274 LSH 6274 LSLH 6274
1 1/2" 1 1/2" 1 1/2"
P-72A P-72B
SUMP A

DRAINS ON THIS DRAWING

126	132
127	133
128	134
129	138
130	139
131	140

CLEANOUT ON THIS DRAWING

1139

NOTES:
1. WORK THIS DRAWING WITH DRAWINGS 28216, 28218, 28219, & 28221 THRU 28229.
2. ALL LINES, EQUIPMENT, COMPONENTS, AND INSTRUMENTS HAVE SYSTEM PREFIX WLD UNLESS NOTED OTHERWISE.
3. ALL LINES, EQUIPMENT, COMPONENTS, AND INSTRUMENTS ARE SAFETY CLASS NNS.
4. △ -INDICATES REVISION LEVEL.

REV	DATE	DSGN	DRWN	CHKD	CDE	SES	DESCRIPTION
6	3/21/97	BCS	—	MRB	DWS	RRC	INCORP. DCR 94-005 CA8
5	12/03/91	JM	—	MRB	MPW	RRC	INCORP. DCR 90-42 CA32
4	8/14/91	MRB	JM	FCB	GPM	BCL	INCORP. DCR 90-42 CA8
3	5/21/91	MRB	RMC	APL	BCL	GRM	INCORP. DCR 87-294 CA84
2	12/12/88	FJR	TAK	MRJ	BCL	RRC	ADDED CONTINUATION FLAG COORDS, REFERENCE DRAWINGS AND NOTE 4.
1	4/2/88	GD	GJS	JDM	DFM	WFD	ISSUED FOR OPERATIONS
0	3/24/88	MLS	MRB	JNM	JWK	WFD	ISSUED FOR FIELD VERIFICATION

North Atlantic Energy Service Corporation

SEABROOK STATION

WASTE PROCESSING LIQUID DRAINS
FUEL STORAGE BUILDING

PID- 1-WLD-B20220

REF. DRAWING NO.	REV	TITLE
9763-F-804958	4	RHR FLR & EQUIP DRNS & FUEL STO. BLDG SUMPS-P&ID

03/21/97

PID- 1-WLD-B20221

NHY PID:20221.DGN;1

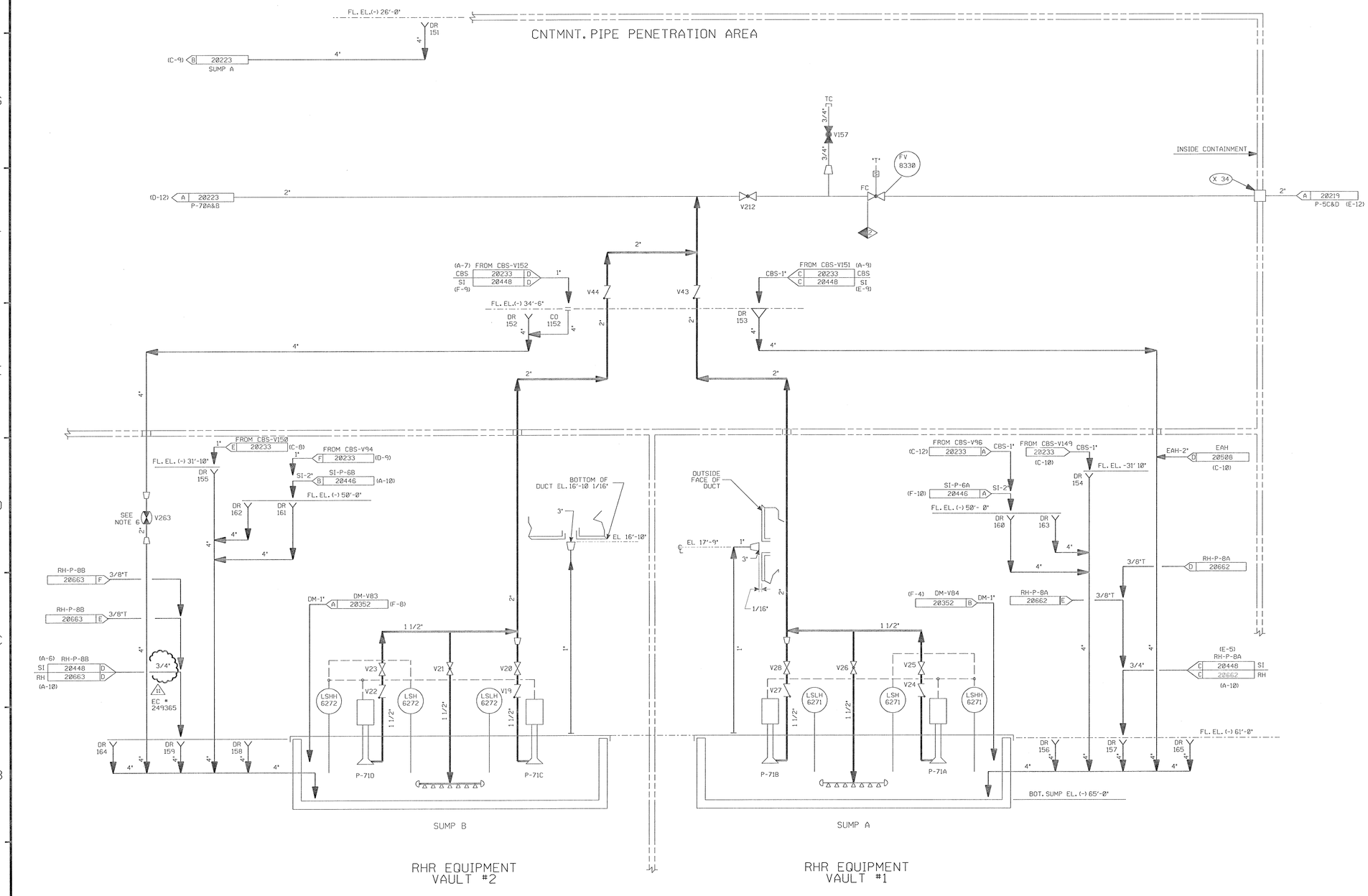

FOR P&ID REFERENCE DRAWINGS, SYMBOLS AND ABBREVIATIONS REFER TO DRAWINGS P&ID - LEGEND 1 AND P&ID - LEGEND 2

DRAINS ON THIS DRAWING

151	156	161
152	157	162
153	158	163
154	159	164
155	160	165

CLEANOUT ON THIS DRAWING

1152

NOTES:

1. WORK THIS DRAWING WITH DRAWINGS 20216, 20218 THRU 20220, & 20222 THRU 20229.
2. ALL LINES, EQUIPMENT, COMPONENTS, AND INSTRUMENTS HAVE SYSTEM PREFIX WLD UNLESS NOTED OTHERWISE
3. DELETED
4. ALL LINES, EQUIPMENT, COMPONENTS, AND INSTRUMENTS ARE SAFETY CLASS NNS UNLESS NOTED OTHERWISE
5. △ INDICATES REVISION LEVEL.
6. V263 IS A SPRING LOADED, SELF-CLOSING VALVE, PROVIDING MELB PROTECTION FROM CROSS-TRAIN FLOODING OF VAULTS.

PORTIONS OF THIS DRAWING ARE

NUCLEAR SAFETY RELATED

REV	DATE	DSGN	CHKD	CE	DESCRIPTION
11	11/25/19	GPS	JWL	BCS	INCORP. EC #249365
10	1/10/02	MPW	BCS	RRB	INCORP. DCR 01-0002 DCN 00
9	3/25/99	BCL	MRB	GPM	INCORP MMOD 92-552 CA0
8	10/29/98	MRB	JM	BCL	INCORP MMOD 98-601 CA00
7	11/11/89	MRB	APL	GRM	COMPLETE INCORP DCR 87-311 CA16
6	9/6/89	MRB	APL	WFD	PARTIAL INCORP. OF DCR 87-311 CA 07
5	4/21/89	MPW	APL	GPM	ADDED: LINES FROM DWG #20520 SHOWN ON THIS DWG. PER CHEMISTRY REQUEST REVISED: CONT. REF. COORD., EAH CONT. & NOTE 4 DELETED: PIPE SPECS.
4	7/10/87	MPW	PAL	VWS	INCORP DCR 86-482.
3	11/4/86	MAP	WRD	RRC	REVISED REF DWG REV, ADDED P&ID LEGEND NOTE, DWG COORDS. REMOVED ALFA FROM DWG REF NOTE 1.
2	9/2/86	MAP	JDM	RRC	DELETED NOTE 3 & INCORPED ECA 74/116567B
1	4/2/86	GD	JDM	WFD	ISSUED FOR OPERATIONS
0	3/29/85	MLS	JNM	WFD	ISSUED FOR FIELD VERIFICATION

REF. DRAWING NO.	REV	TITLE
9763-F-804958	5	RHR FLR & EQUIP DRNS & FUELS TO BLDG SUMP-P&ID

NEXTera ENERGY SEABROOK

SEABROOK STATION

WASTE PROCESSING LIQUID DRAINS RHR EQUIPMENT VAULTS #1 & #2

PID- 1-WLD-B20221

09/27/10

PID- 1-WLD-B20222

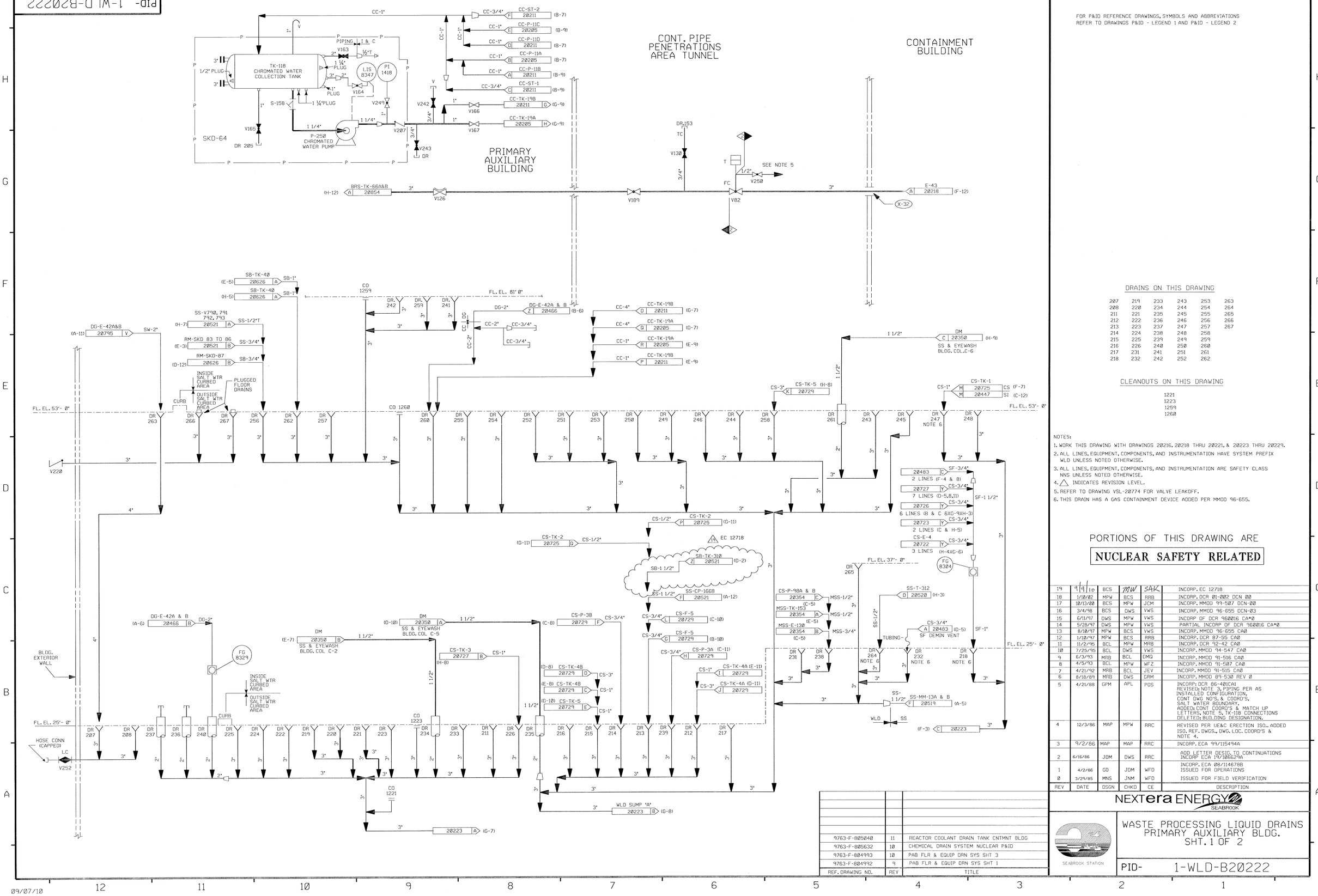

FOR P&ID REFERENCE DRAWINGS, SYMBOLS AND ABBREVIATIONS REFER TO DRAWINGS P&ID - LEGEND 1 AND P&ID - LEGEND 2

DRAINS ON THIS DRAWING

207	219	233	243	253	263
208	220	234	244	254	264
211	221	235	245	255	265
212	222	236	246	256	266
213	223	237	247	257	267
214	224	238	248	258	
215	225	239	249	259	
216	226	240	250	260	
217	231	241	251	261	
218	232	242	252	262	

CLEANOUTS ON THIS DRAWING

1221
1223
1259
1260

NOTES:

1. WORK THIS DRAWING WITH DRAWINGS 20216, 20218 THRU 20221, & 20223 THRU 20229.
2. ALL LINES, EQUIPMENT, COMPONENTS, AND INSTRUMENTATION HAVE SYSTEM PREFIX WLD UNLESS NOTED OTHERWISE.
3. ALL LINES, EQUIPMENT, COMPONENTS, AND INSTRUMENTATION ARE SAFETY CLASS NNS UNLESS NOTED OTHERWISE.
4. △ INDICATES REVISION LEVEL.
5. REFER TO DRAWING VSL-20774 FOR VALVE LEAKOFF.
6. THIS DRAIN HAS A GAS CONTAINMENT DEVICE ADDED PER MMOD 96-655.

PORTIONS OF THIS DRAWING ARE

NUCLEAR SAFETY RELATED

REV	DATE	DSGN	CHKD	CE	DESCRIPTION
19	9/9/10	BCS	MW	SAK	INCORP. EC 12718
18	1/18/02	MPW	BCS	RRB	INCORP. DCR Ø1-002 DCN Ø2
17	12/13/00	BCS	MPW	JCM	INCORP. MMOD 99-507 DCN-Ø2
16	3/4/98	BCS	DWS	VWS	INCORP. MMOD 96-655 DCN-03
15	6/11/97	DWS	MPW	VWS	INCORP OF DCR 960016 CA#Ø
14	5/28/97	DWS	MPW	VWS	PARTIAL INCORP OF DCR 960016 CA#Ø
13	8/18/97	MPW	BCS	VWS	INCORP. MMOD 96-655 CAØ
12	1/18/97	MPW	BCS	RRB	INCORP. DCR 87-55 CAØ
11	11/2/95	BCL	MPW	MRB	INCORP. DCR 92-42 CAØ
1Ø	7/25/95	BCL	DWS	VWS	INCORP. MMOD 94-547 CAØ
9	6/3/93	MRB	BCL	DMQ	INCORP. MMOD 91-516 CAØ
8	4/5/93	BCL	MPW	WFZ	INCORP. MMOD 91-507 CAØ
7	4/21/92	MRB	BCL	JEV	INCORP. MMOD 91-515 CAØ
6	8/18/89	MRB	DWS	GRM	INCORP. MMOD 89-530 REV Ø
5	4/21/88	GPM	APL	POS	INCORP. DCR 86-401CA1 REVISED NOTE 3, PIPING PER AS INSTALLED CONFIGURATION. CONT DWG NO'S. & COORD'S, SALT WATER BOUNDARY. ADDED: CONT COORD'S & MATCH UP LETTERS, NOTE 5, TK-118 CONNECTIONS DELETED: BUILDING DESIGNATION.
4	12/3/86	MAP	MPW	RRC	REVISED PER UE&C ERECTION ISO.. ADDED ISO. REF. DWGS., DWG. LOC. COORD'S & NOTE 4.
3	9/2/86	MAP	MAP	RRC	INCORP. ECA 99/115494A
2	6/16/86	JDM	DWS	RRC	ADD LETTER DESIG. TO CONTINUATIONS INCORP ECA 19/106629A
1	4/2/86	GD	JDM	WFD	INCORP. ECA Ø8/114678B ISSUED FOR OPERATIONS
Ø	3/29/85	MNS	JNM	WFD	ISSUED FOR FIELD VERIFICATION

REF. DRAWING NO.	REV	TITLE
9763-F-805040	11	REACTOR COOLANT DRAIN TANK CNTMNT BLDG
9763-F-805632	1Ø	CHEMICAL DRAIN SYSTEM NUCLEAR P&ID
9763-F-804993	1Ø	PAB FLR & EQUIP DRN SYS SHT 3
9763-F-804992	9	PAB FLR & EQUIP DRN SYS SHT 1

NEXTera ENERGY SEABROOK

SEABROOK STATION

WASTE PROCESSING LIQUID DRAINS PRIMARY AUXILIARY BLDG. SHT. 1 OF 2

PID- 1-WLD-B20222

09/07/10

PID- 1-WLD-B20223

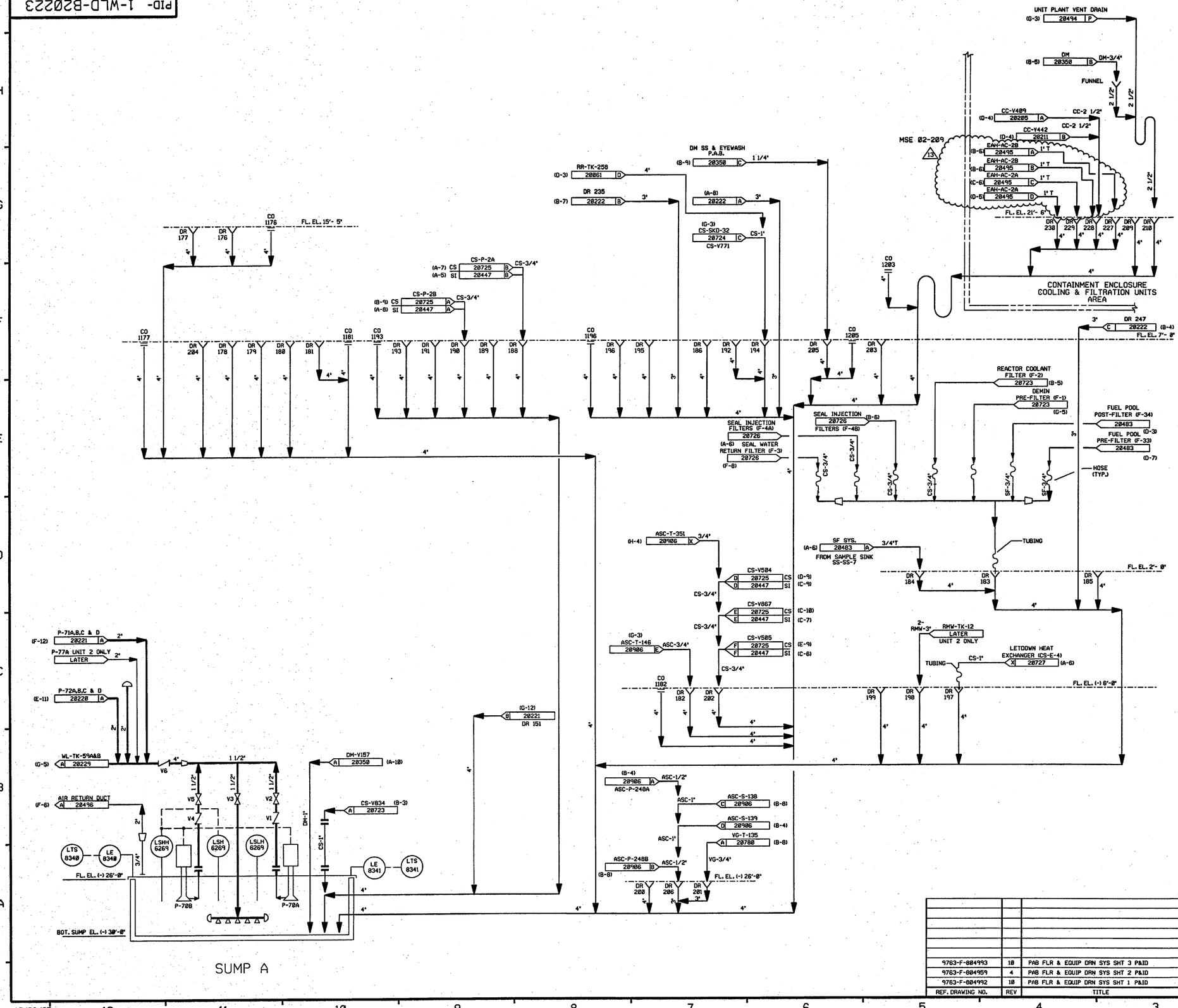

FOR P&ID REFERENCE DRAWINGS, SYMBOLS AND ABBREVIATIONS REFER TO DRAWINGS P&ID - LEGEND 1 AND P&ID - LEGEND 2

DRAINS ON THIS DRAWING

176	183	191	198	205	238
177	184	192	199	206	
178	185	193	200	209	
179	186	194	201	218	
180	188	195	202	227	
181	189	196	203	228	
182	190	197	204	229	

CLEANOUTS ON THIS DRAWING

1176	1193	1446 (UNIT #2)
1177	1196	
1181	1203	
1182	1205	

NOTES:

1. WORK THIS DRAWING WITH DRAWINGS 20216, 20218 THRU 20222, & 20224 THRU 20229.
2. ALL LINES, EQUIPMENT, COMPONENTS, & INSTRUMENTS HAVE SYSTEM PREFIX WLD UNLESS NOTED OTHERWISE.
3. ALL LINES, EQUIPMENT, COMPONENTS, & INSTRUMENTS ARE SAFETY CLASS NNS, UNLESS NOTED OTHERWISE.
4. △ INDICATES REVISION LEVEL.

REV	DATE	DSGN	CHKD	CE	DESCRIPTION
13	10-27-05	BCS	JM	RSB	INCORP. MSE 02-209 REV. 00
12	1/18/02	MPW	BCS	RRB	INCORP. DCR 01-0006 DCN 00
11	8/18/97	BCL	BCS	VWS	INCORP. MMOD-91-587 CA-0
10	11/2/92	BCL	DWS	DJM	INCORP. DCR 88-179 CA0
9	4/23/92	MRB	BCL	JEV	INCORP. MMOD 91-515 CA0
8	7/25/91	MRB	JM	JEV	INCORP. DCR 86-244 CA0
7	3-16-90	MRB	APL	RSG	INCORPORATED DCR 87-33 CA7 REVISED: NOTE 3 ADDED: CONTINUATION TAG DESCRIPTIONS
6	3/22/88	MPW	BCL	RRC	LINE FROM DWG 20520 SHOWN GOING TO SUMP PER CHEMISTRY REQUEST.
5	2/3/87	JDM	MPW	RRC	INCORP DCR 480
4	12/11/86	WDS	MRJ	RRC	REVISED REF. DWG. REVISIONS, ADDED FLANGES AT SUMP A
3	10/10/86	MAP	JDM	RRC	ADDED DWG. LOCATION COORD. & NOTE 4. RE-INCORPORATED ECA 99/114510A INC. ECA'S 99/806183C,19/1800419A
2	6/13/86	TAK	DWS	RRC	INC ECA'S 99/114510A & 99/806183A
1	4/2/86	GD	JDM	WFD	ISSUED FOR OPERATIONS
0	3/24/85	MLS	RSL	WFD	ISSUED FOR FIELD VERIFICATION

REF. DRAWING NO.	REV	TITLE
9763-F-804993	10	PAB FLR & EQUIP DRN SYS SHT 3 P&ID
9763-F-804959	4	PAB FLR & EQUIP DRN SYS SHT 2 P&ID
9763-F-804992	10	PAB FLR & EQUIP DRN SYS SHT 1 P&ID

FPL ENERGY Seabrook Station

WASTE LIQUID DRAINS
PRIMARY AUXILIARY BLDG.
SHT. 2 OF 2

PID- 1-WLD-B20223

10/26/05

RCA WALKWAY BETWEEN UNIT 1 & UNIT 2

ADMINISTRATION & SERVICE BUILDING

RCA WALKWAY UNIT 1

FOR P&ID REFERENCE DRAWINGS, SYMBOLS AND ABBREVIATIONS REFER TO DRAWINGS P&ID - LEGEND 1 AND P&ID - LEGEND 2

TK-87A &87B 20223 A (A-7) THIS DWG

RCA CHECK POINT

PERSONNEL HATCH AREA

PIPE TUNNEL

FL. EL. 21'- 0"

EL. 12'-0"

FL. EL. 5'-0"

FL. EL. 0'- 0"

FL. EL. (-) 5'- 8"

SUMP A

SUMP B

SUMP C

P-230

P-77B

P-77C

MSS-1/2" P-141 P 20353 (G-6)

DCW-4" RCA SHOPS SUMP

DCW-3" RCA LOCKER ROOM FLRS,SINKS,SHOWERS

SEC. CHEM LAB DCW-3" 20182 (B-12) SINK DRAINS

HOT CHEM LAB DCW-3" 20182 (B-12) ALL DRAINS

DECON. RM DCW-4" 20182 (B-12) ALL DRAINS

VENT TO ATMOS

TK-86 CHEMICAL DRAIN TANK

SB-P-292 20628 D (E-3) SB-2"

DR 471 20225 B (B-4)

TK-87 A & B 20228 A (G-8)

DR 414 (D-5) A 20227

DM-SS-1 DECON SINK 20225 A (B-5)

P-77B, 77C & P-230 THIS DWG A (H-4)

P-141 CHEMICAL DRAIN TRANSFER PUMP

RCA TUNNEL OUTSIDE

PLUG

SCAFFOLD STORAGE BLDG

FD

EC 145021

NOTE 3

DRAINS ON THIS DRAWING

Ø10	Ø16	Ø22	Ø28
Ø11	Ø17	Ø23	Ø29
Ø12	Ø18	Ø24	Ø30
Ø13	Ø19	Ø25	Ø31
Ø14	Ø20	Ø26	Ø43
Ø15	Ø21	Ø27	

CLEANOUTS ON THIS DRAWING

1010
1014

NOTES:

1. WORK THIS DRAWING WITH DRAWINGS 20216,20218 THRU 20223 & 20225 THRU 20229.
2. ALL LINES, EQUIPMENT, COMPONENTS, AND INSTRUMENTS HAVE SYSTEM PREFIX WLD UNLESS NOTED OTHERWISE.
3. ALL LINES, EQUIPMENT, COMPONENTS, AND INSTRUMENTS ARE SAFETY CLASS N.
4. △ INDICATES REVISION LEVEL.

REV	DATE	DSGN	CHKD	CE	DESCRIPTION
7	9/12/07	BCS	MW	MDK	INCORP. EC 145021
6	11/14/87	BCS	JM	RRB	INCORP. MSE 87-034 REV. 00, 01
5	2/3/87	JDM	PAL	RRC	INCORP. DCR 480.
4	11/12/86	CSB	WRD	RRC	REMOVED SIGNAL LINE FROM LEVEL INSTR. (FOUND ON I&C LOOP DWG.) REMOVED PIPE SPEC., ADDED V8000 PER INSTALLED CONDITION.
3	10/9/86	JDM	MPW	RRC	ADDED CONT. REF. LOCA. & NOTE 4 INCORP. ECA 19/1151698 & 19/118170A
2	6/12/86	DWS	DWS	RRC	ADDED DCW CONTINUATIONS
1	4/2/86	GD	JDM	WFD	INCORP. ECA 06/114859C ISSUED FOR OPERATIONS
0	5/29/85	MLS	RSL	WFD	ISSUED FOR FIELD VERIFICATION

NEXTera ENERGY SEABROOK

SEABROOK STATION

WASTE PROCESSING LIQUID DRAINS ADMINISTRATION BUILDING & RCA WALKWAY DETAILS

PID- 1-WLD-B20224

REF. DRAWING NO.	REV	TITLE
9763-F-805632	9	CHEMICAL DRAIN SYS. NUCLEAR P&ID
9763-F-804995	6	RCA WALKWAY TUNNEL DRAINS & SUMPS P&ID

09/03/09

NHY P1D:20224.DGN:1

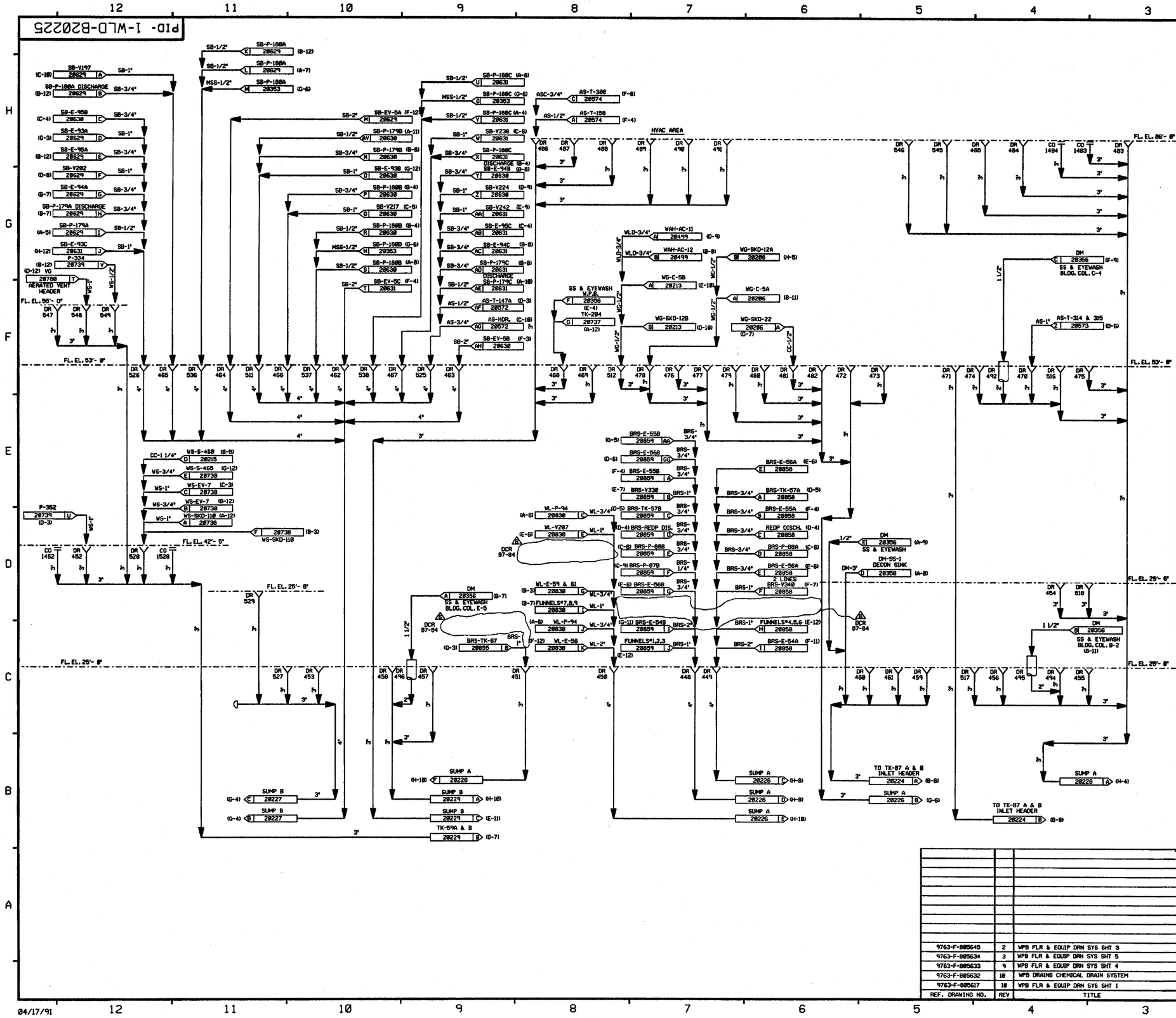

FOR P&ID REFERENCE DRAWINGS, SYMBOLS AND ABBREVIATIONS REFER TO DRAWINGS P&ID - LEGEND 1 AND P&ID - LEGEND 2

DRAINS ON THIS DRAWING

448	458	468	478	489	517	545
449	459	469	479	490	518	546
450	460	470	480	491	525	547
451	461	471	481	492	526	548
452	462	472	482	493	527	549
453	463	473	483	494	528	
454	464	474	484	495	529	
455	465	475	485	496	536	
456	466	476	486	511	537	
457	467	477	487	512	538	
			488	516		

CLEANOUTS ON THIS DRAWING

1452
1483
1484
1520

NOTES:

1. WORK THIS DRAWING WITH DRAWINGS 20216, 20218 THRU 20224, & 20226 THRU 20229.
2. ALL LINES, EQUIPMENT, COMPONENTS, AND INSTRUMENTATION HAVE SYSTEM PREFIX WLD UNLESS NOTED OTHERWISE.
3. ALL LINES, EQUIPMENT, COMPONENTS, AND INSTRUMENTATION ARE SAFETY CLASS NNS. UNLESS NOTED OTHERWISE.
4. △ INDICATES REVISION LEVEL.

REV	DATE	DSGN	DRWN	CHKD	CE	LDE	DESCRIPTION
6	11/9/92	MRB	FCB	RMC	DJM	DJM	INCORP. DCR 87-84 CA0
5	3/16/90	MRB	RMC	APL	WCL	RSG	INCORPORATED DCR 87-33 CA07 REVISED: DECON SINK CONT. TO CLARIFY DUPLICATION OF SYSTEM INTERFACE, CONT. TAGS & COORD. PER SYSTEM. ADDED: CONT DESCRIPTIONS
4	11/7/88	MRB	RMC	GPM	APL	RRC	INCORP. ECA 19/802229A REVISED: NOTE 3 ADDED: CONTINUATION COORD'S DELETED: REDUNDANT CONTINUATION TAGS
3	12/17/86	MAP	OPO	MRJ	BCL	RRC	REVISED PIPING TIE-IN CONNECTION PER UE&C PIPING DIAG. ADDED DWG. LOC. COORDS & REVISED REVISION NOS. ADDED NOTE 4.
2	6/12/86	TAK	TAK	DWS	JMS	RRC	INCORP. DR 94/327B, AND ADDED REF. DWGS.
1	4/2/86	GD	GJS	JDM	DJM	WFD	INCORP. ECA 99/114053A INCORP. ECA 19/113059A ISSUED FOR OPERATIONS
0	3/29/86	MLS	MRB	JMN	JWK	WFD	ISSUED FOR FIELD VERIFICATION

REF. DRAWING NO.	REV	TITLE
9763-F-805645	2	WPB FLR & EQUIP DRN SYS SHT 3
9763-F-805634	3	WPB FLR & EQUIP DRN SYS SHT 5
9763-F-805633	9	WPB FLR & EQUIP DRN SYS SHT 4
9763-F-805632	10	WPB DRAINS CHEMICAL DRAIN SYSTEM
9763-F-805617	10	WPB FLR & EQUIP DRN SYS SHT 1

PSNH PUBLIC SERVICE OF NEW HAMPSHIRE

SEABROOK STATION

WASTE PROCESSING LIQUID DRAINS WASTE PROCESSING BUILDING DRAINS SHT 1 OF 3

PID- 1-WLD-B20225

04/17/91

NHY PID:220226.DGN:1

FOR P&ID REFERENCE DRAWINGS, SYMBOLS AND ABBREVIATIONS REFER TO DRAWINGS P&ID - LEGEND 1 AND P&ID - LEGEND 2

DR 451 F 20225 (B-9) DR 450 20225 E (B-6)

WL-P-95 (A-9) 20830 A WL-1/2"
CC-PCV-38 (D-5) 20206 A CC-3/4"
WL-P-93 (A-9) 20830 B WL-3/4"
WL-P-95 (A-10) 20830 C WL-3/4"
WL-V208 (A-12) 20830 E WL-1"
WL-P-95 (G-6) 20353 D MSS-1/2"
WL-P-93 (G-6) 20353 C MSS-1/2"

CC-V669 (C-9) 20213 A CC-1"

DR 449 (B-6) 20225 C
DR 448 (B-6) 20225 D

BRS-V366 (F-12) 20860 G BRS-1"
BRS-V365 (D-12) 20860 H BRS-1"
MSS-TK-154 (G-6) 20354 C MSS-1/2"
MSS-E-131 (G-6) 20354 D MSS-3/4"

BRS-V344 (D-12) 20858 A BRS-1"
BRS-P-87A (C-9) 20858 B BRS-1/4"
BRS-P-89A (C-10) 20858 C BRS-3/4"
BRS-P-89A (D-11) 20858 D BRS-3/4"
BRS-P-89A (G-6) 20353 K MSS-1/2"
BRS-P-87A (G-6) 20353 I MSS-1/2"

(D-11) BRS-REBP DIS. 20859 A BRS-3/4"
(D-12) BRS-V337 20859 B BRS-1"
(G-6) BRS-P-89B 20353 L MSS-1/2"
(G-6) BRS-P-87B 20353 J MSS-1/2"
(C-10) BRS-P-89B 20859 C BRS-3/4"

RR-1" RR-TK-253 A 20061 (C-8)
ASC-1/2" ASC D 20903 6 LINES (G-3)(F-4)(E-5) (D-5)(D-6)(B-6)
AS-3/4" & AS-1/2" AS-T-150B 20574 2 LINES (C-5)
BRS-6" BRS-TK-56B B 20857 (E-7)
ASC-1/2" ASC C 20903 6 LINES (G-8)(F-9)(E-9) (D-10)(D-6)(C-11)
AS-3/4" & AS-1/2" AS-T-150A 20574 2 LINES (C-5)
BRS-6" BRS-TK-56A A 20857 (E-7)
DR-472 B 20225 (B-5)

RMW-2" RMW-TK-12 V-88 B 20360 (F-12)
(B-3) 20225 A 3"

CO 1509
TANK FARM UNIT 1 ONLY
FILTER CUBICLE DRAINS 500-509

EL. 25'- 0"
FL. EL. 20'- 0"
EL. 15'- 3"
FL. EL. 13'- 0"
FL. EL. (-) 3'- 0"

DR 445 DR 446 DR 447
DR 500 DR 501 DR 502 DR 503 DR 504 DR 505 DR 506 DR 507 DR 508 DR 509
3/4" V109 LC V278 LC
LC V108
DR 443 DR 444
S-7 A 20229 2 LINES (G-6) (G-7)
FOR REF. CALLOUTS SEE DETAIL B-B
(G-5) 20856 AA RM-SKD-74

DR 441 DR 442 DR 439 DR 440 DR 533
CO 1442 DR 434 DR 433 CO 1430 DR 430 DR 429 DR 432 DR 431 DR 435 DR 436
DR 417 DR 416 DR 531 DR 530
CO 1421 DR 420 DR 421 DR 532 DR 519 DR 437 DR 422 DR 423

SUMP-A 20229 B (D-4)
SUMP-A 20229 E (D-5)
SUMP-A 20229 C (D-4)
SUMP-A 20229 F (D-5)
SUMP-A 20229 G (D-5)
SUMP-A 20229 D (D-4)

TK-193 (F-5) 20856 M 3"
WL-DM-15 (E-4) 20831 L WL-1"
BRS-DM-14A & B (D-9) 20861 R BRS-1"
BRS-DM-13B (D-12) 20856 OO BRS-1"
BRS-DM-13A (F-12) 20856 O BRS-1"
BRS-F-51A (C-7) 20856 NN BRS-3/4"
BRS-F-51B (F-7) 20856 N BRS-3/4"
BRS-F-52B (H-9) 20860 PP BRS-3/4"
BRS-F-52A (C-9) 20860 P BRS-3/4"
BRS-F-53B (H-5) 20861 Q BRS-3/4"
BRS-F-53A (E-5) 20861 QQ BRS-3/4"
WL-F-54A (C-3) 20829 KK WL-3/4"
WL-F-54B (D-3) 20829 K WL-3/4"
WL-F-59 (E-4) 20831 K WL-3/4"
BRS-F-60 (D-5) 20854 S BRS-3/4"

BRS-3/4" BRS-F-51B VV 20856 (A-7)
BRS-3/4" BRS-F-51A V 20856 (D-7)
BRS-3/4" BRS-F-52B XX 20860 (F-9)
BRS-3/4" BRS-F-52A X 20860 (A-9)
BRS-3/4" BRS-F-53B W 20861 (G-5)
BRS-3/4" BRS-F-53A WW 20861 (D-5)
WL-3/4" WL-F-54A & B J 20829 (B-3)
BRS-3/4" BRS-F-60 U 20854 (C-5)
WL-3/4" WL-F-59 J 20831 (D-4)
WL-1" WL-V153 K 20829 (E-4)
BRS-1" BRS-V364 Y 20860 (F-3)
ASC-3/4" ASC F 20905 6 LINES
CC-3/4" CC-V481 A 20212 (H-7)
ASC-3/4" ASC-PCV-9247 & 9249 M 20904 (C-10)
CC-2 1/2" CC-V411 B 20206 (E-9)

BRS-P-86B (B-7) 20857 T BRS-3/4"
BRS-P-86B (B-5) 20857 TT BRS-3/4"
BRS-P-86A (B-8) 20857 TA BRS-3/4"
BRS-P-86A (B-10) 20857 TB BRS-3/4"
WG-TK-124 (D-3) 20771 A WG-1/2"
WG-S-426 (E-4) 20771 VT WG-1/2"
WL-V247 (G-3 20829 H WL-3/4"
BRS-P-86A (E-4) 20353 G MSS-1/2"
BRS-P-86B (E-4) 20353 H MSS-1/2"

AS-T-149B (E-7) 20572 AS-1/2"
AS-V681 (B-7) 20572 AS-3/4"
AS-T-149A (B-7) 20572 AS-1/2"
AS-V687 (E-7) 20572 AS-3/4"
AS-T-148B (E-6) 20572 AS-1/2"
AS-V669 (C-6) 20572 AS-3/4"
AS-T-148A (C-6) 20572 AS-1/2"
AS-V675 (E-6) 20572 AS-3/4"

AS-3/4" AS-V826 20572 (G-6)

AS-HDR F 20573 (A-12)
AS D 20573 (D-11)
AS-HDR A 20573 (F-11)
BRS-E-70 A 20855 (B-4)
AS-T-155 C 20573 (E-10)
AS-T-154 B 20573 (F-10)
AS-T-112 E 20573 (A-10)
BRS-P100A & B E 20354 2 LINES (G-5)
MSS-1/2"

EC#12627

FG 8349

DR 416 DR 531 DR 530 DR 420 DR 421 CO 1421 DR 532 DR 519 DR 437 DR 422 DR 423

DETAIL B-B

DRAINS ON THIS DRAWING

416	431	440	500	508
417	432	441	501	509
420	433	442	502	519
421	434	443	503	530
422	435	444	504	531
423	436	445	505	533
429	437	446	506	532
430	439	447	507	

CLEANOUTS ON THIS DRAWING

1421
1430
1442
1509

NOTES:

1. WORK THIS DRAWING WITH DRAWINGS 20216, 20218 THRU 20225, 20227 THRU 20229.
2. ALL LINES, EQUIPMENT, COMPONENTS, AND INSTRUMENTATION HAVE SYSTEM PREFIX WLD, UNLESS NOTED OTHERWISE.
3. ALL LINES, EQUIPMENT, COMPONENTS, AND INSTRUMENTS ARE SAFETY CLASS NNS, UNLESS NOTED OTHERWISE.
4. △ INDICATES REVISION LEVEL.

REV	DATE	DSGN	CHKD	CE	DESCRIPTION
7	3/17/09	JM	BCS	DSM	INCORPORATED EC#12627
6	7/11/00	BCS	MPW	DEA	INCORP MMOD 99-594 DCN-00
5	11/7/92	MRB	BCL	DJM	INCORP DCR 87-84 CA0
4	9/27/91	MRB	JM	WFD	INCORP DCR 90-07 CA0 REVISED NOTE 3 PER ENG DESIGN STANDARD 31780 SECT. 3.0
3	12/9/86	MPW	WRD	RRC	ADDED CONT. REF. LOCS., CAPS TO DRAINS PER ERECTION ISO., NOTE 4, DELETED WL LINE, DUPLICATED SHOWN ON DWG. 20829
2	6/24/86	GD	VFS	RRC	SIZES OF DRAINS 437, 519, & 532 CHANGED & GENERAL REVISION PER P&ID REVIEW.
1	3/29/85	GD	JDM		ISSUED FOR OPERATIONS
0	3/29/85	MLS	JNM	WFD	ISSUED FOR FIELD VERIFICATION

REF. DRAWING NO.	REV	TITLE
9763-F-805634	3	WPB FLR & EQUIP DRN SYS P&ID SHT 5
9763-F-805645	2	WPB FLR & EQUIP DRN SYS SHT 3
9763-F-805617	10	WPB FLR & EQUIP DRN SYS SHT 1
9763-F-805644	1	WPB FLR & EQUIP DRN SYS SHT 2

FPL ENERGY Seabrook Station

WASTE PROCESSING LIQUID DRAINS
WASTE PROCESSING BUILDING DRAINS
SHT. 2 OF 3

PID- 1-WLD-B20226

03/09/09

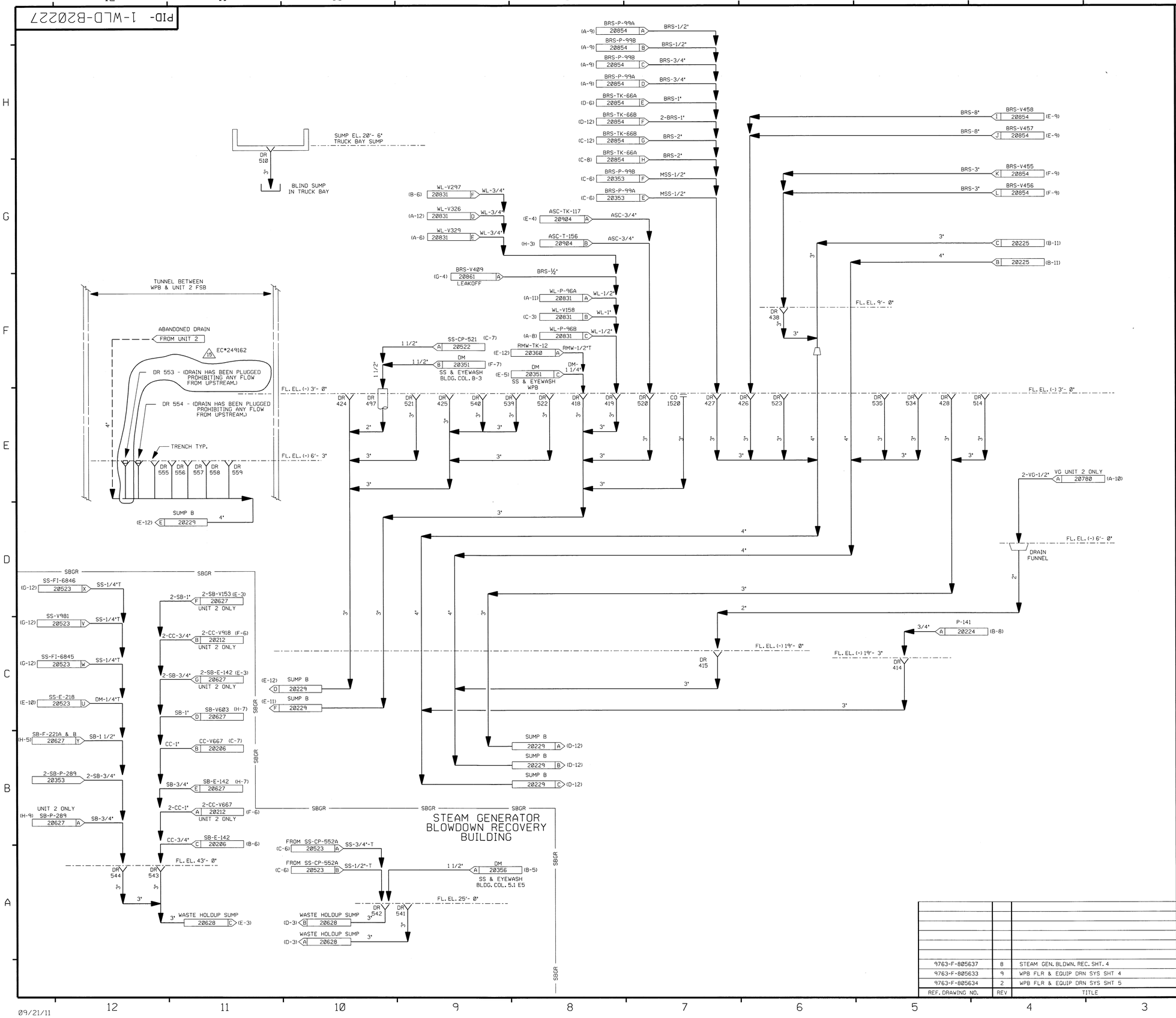

FOR P&ID REFERENCE DRAWINGS, SYMBOLS AND ABBREVIATIONS REFER TO DRAWINGS P&ID - LEGEND 1 AND P&ID - LEGEND 2

DRAINS ON THIS DRAWING

414	425	497	522	540	553	558
415	426	510	523	541	554	559
418	427	514	534	542	555	
419	428	520	535	543	556	
424	438	521	539	544	557	

CLEANOUTS ON THIS DRAWING

1520

NOTES:

1. WORK THIS DRAWING WITH DRAWINGS 20216, 20218 THRU 20226, 20228 & 20229.
2. ALL LINES, EQUIPMENT, COMPONENTS, AND INSTRUMENTS HAVE SYSTEM PREFIX WLD UNLESS NOTED OTHERWISE.
3. ALL LINES, EQUIPMENT, COMPONENTS, AND INSTRUMENTS ARE SAFETY CLASS NNS. UNLESS NOTED OTHERWISE.
4. △ INDICATES REVISION LEVEL.
5. DELETED

REV	DATE	DSGN	CHKD	CE	DESCRIPTION
15	9/21/11	JM	GPS	MAP	EC#249162 INCORPED
14	11-2-04	BCS	JM	RRB	INCORP MSE 04-152 REV. 0
13	7-24-03	BCS	JM	MKC	INCORP MSE 03-147 REV. 0
12	1-21-94	DWS	MRB	RSG	INCORP DCR 86-174 CA 0
11	7-17-92	MRB	BCL	RSG	INCORP DCR 86-538 CA 0
10	3/23/92	MRB	BCL	RSG	INCORP MMOD 91-501 CA 0
9	8/21/91	MRB	JM	PEB	INCORPORATED 90-7 CA 03
8	3/16/90	MRB	APL	RSG	INCORPORATED 87-33 CA 5
7	5/26/89	GPM	PAL	IW	INCORPORATED 87-110 CA 11
6	11/7/88	MRB	GPM	RRC	REVISED: NOTE 3 ADDED: CONTINUATION TAG AND LOCATION COORDINATE MADE MINOR DRAFTING ENHANCEMENTS FOR CLARITY
5	10/23/87	MPW	BCL	PAG	ADDED: DRAIN LINES FROM P-99 A&B CONT. DWG NUMBERS AND LOCATION COORDINATES. DELETED: UNIT 2 LINE, AS LINES (SHOWN ON DWG. 20576)
4	4/8/87	WDS	MRJ	VWS	INCORP DCR 87-0013.
3	12/11/86	CSB	WRD	RRC	ADDED P&ID REF DWG NOTE, DRAIN LINES TO DR 419 PER ECA 19/111538C, CONT FLG COORDS, UNIT 2 DRAIN LINE PER LINE BY LINE VERIFICATION.
2	6/19/86	JDM	DWS	JMS	REV PER UE&C P&ID 805637 REV-7
1	4/2/86	GD	JDM	WFD	ISSUED FOR OPERATIONS
0	3/29/85	MLS	JNM	WFD	ISSUED FOR FIELD VERIFICATION

REF. DRAWING NO.	REV	TITLE
9763-F-805637	8	STEAM GEN. BLDWN. REC. SHT. 4
9763-F-805633	9	WPB FLR & EQUIP DRN SYS SHT 4
9763-F-805634	2	WPB FLR & EQUIP DRN SYS SHT 5

NEXTera ENERGY SEABROOK

SEABROOK STATION

WASTE PROCESSING BUILDING DRAINS SHT. 3 OF 3

PID- 1-WLD-B20227

09/21/11

NHY P1D20228.DGN#1

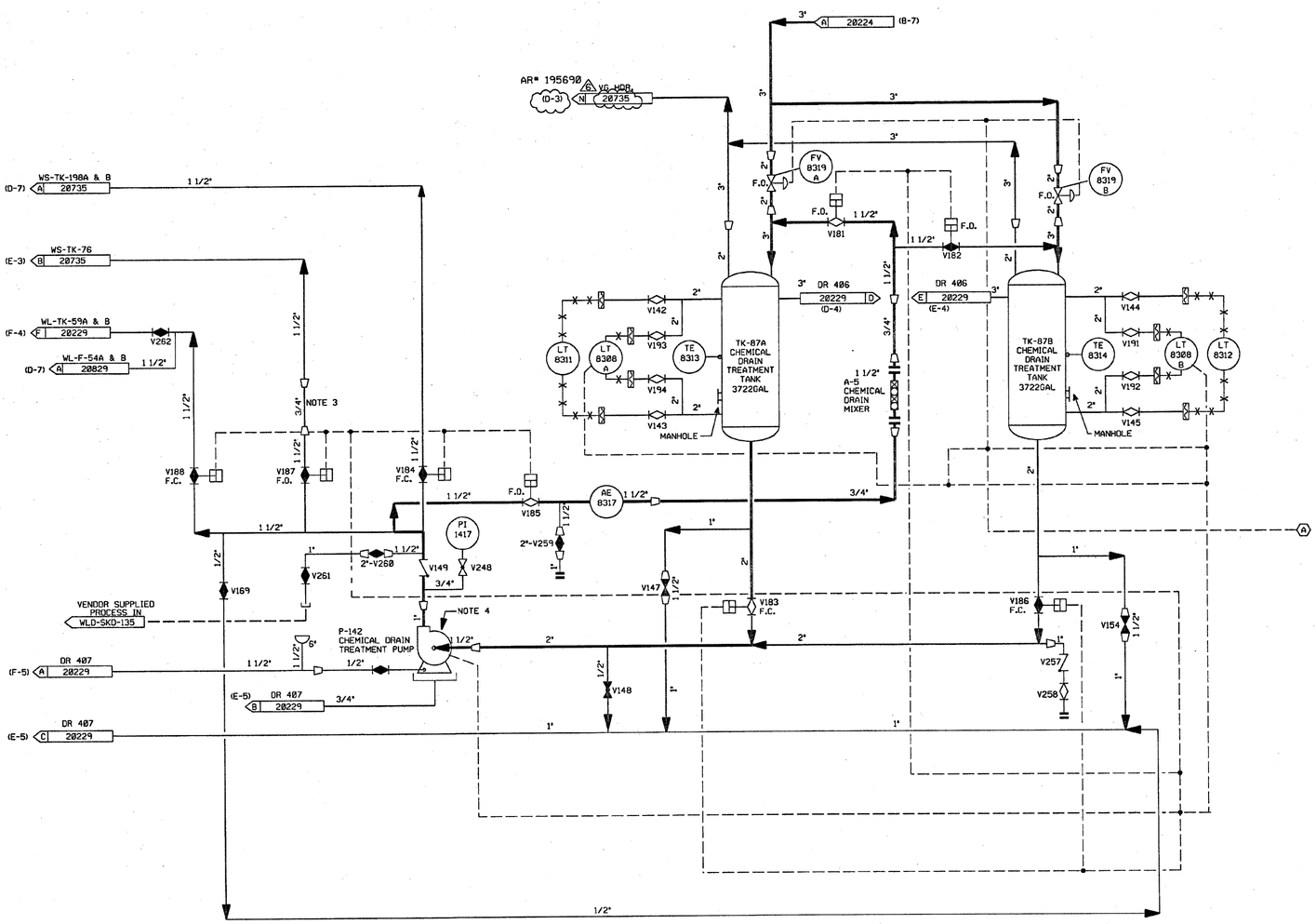

FOR P&ID REFERENCE DRAWINGS, SYMBOLS AND ABBREVIATIONS REFER TO DRAWINGS P&ID - LEGEND 1 AND P&ID - LEGEND 2

INSTRUMENTATION IDENTIFICATION

(A) TO WLD-LT-8305 & WLD-P-141 ON DWG. B20224.

NOTES:

1. WORK THIS DRAWING WITH DRAWINGS 20216, 20218, THRU 20227 & 20229.
2. ALL LINES, EQUIPMENT, COMPONENTS, AND INSTRUMENTS HAVE SYSTEM PREFIX WLD UNLESS NOTED OTHERWISE.
3. FLOW RESTRICTION PIPE SECTION.
4. SEE DWG. DM-20353 FOR DM SUPPLY TO MECHANICAL SEALS.
5. ALL LINES, EQUIPMENT, COMPONENTS, AND INSTRUMENTS ARE SAFETY CLASS N.
6. △ INDICATES REVISION LEVEL.

REV	DATE	DSGN	CHKD	CE	DESCRIPTION
5	6-18-09	BCS	JM	RRB	INCORP AR# 195690
4	4/24/08	BCS	JM	MAP	INCORP MSE 06-011 REV. 00
3	6/30/87	MPW	DWS	RRC	INCORP DCR 86-673 AND DCR 86-266 CA03.
2	11/18/86	FJR	WRD	RRC	ADDED CONT. FLAG COORD'S. & NOTE 6.
1	4/2/86	GD	JDM	WFD	ISSUED FOR OPERATIONS
0	3/24/85	MLS	JNM	WFD	ISSUED FOR FIELD VERIFICATION

REF. DRAWING NO.	REV	TITLE
9763-F-805632	10	CHEMICAL DRN SYSTEM NUCLEAR

NEXTera ENERGY SEABROOK

SEABROOK STATION

WASTE PROCESSING LIQUID DRAINS
WASTE PROCESSING BUILDING
CHEMICAL DRAIN SYSTEM

PID- 1-WLD-B20228

06/15/09

PID- 1-WLD-B20229

FOR P&ID REFERENCE DRAWINGS, SYMBOLS AND ABBREVIATIONS REFER TO DRAWINGS P&ID - LEGEND 1 AND P&ID - LEGEND 2

WL PDIS 1407

VENDOR SUPPLIED WL-SKO-135

V274 MMOD 85-524

S-7 FLOOR DRAIN TANK STRAINER

V245 V246 V122 V123 V128 V121 V107 V105 V104 V106 V103 V101 V100 V98 V97 V99 V96 V102

DM-V86 DM-V85

WL-TK-59A FLOOR DRAIN TANK

WL-TK-59B FLOOR DRAIN TANK

LSHH 6265 LSH 6265 LSHH 6264 LSH 6264 LSHH 6264 LSH 6265 LC

FL. EL. -31' 8"

BDT. SUMP EL. -35' 0" (TYP. 2)

P-101D P-101C P-101B P-101A

SUMP B SUMP A

TRENCH

DR 486 20225 A (B-9)

DR 458

EVS 20780 R (D-10) 3/4"

EVS 20780 D (A-12)

SS & EYEWASH BLDG. COL. B-4

DM 20351 A (A-9)

DM 20351 C (A-8) DM-1"

DM 20351 B (B-12) DM-1"

FOR REF. CALLOUTS SEE DETAIL C-C BELOW

CO 1515

DR 401 DR 402 DR 515 DR 411 DR 410 DR 412 DR 513 DR 413 DR 499 DR 498 DR 483 DR 524 DR 404 DR 409 DR 408 DR 407 DR 406 DR 405

2-SF-2" 2-SF-3/4" 2-SF-V91 2-SF-V93 NOTE 4

DR-415

BRS-1" BRS-P-88A & B A 20857 (D-5)

SB-2" SB-E-88A & B T 28626 (B-12)

P-78A & B A 20223 (C-12)

WL-2" WL-P-96B A 20831 (A-6)

SF-2" SF-P-272 A 20484 (F-3)

DR 417 20226 A (F-5)

DR 528 20225 B (B-9)

WL-P-94 20830 A (B-12)

RS-3" RS-F-19 C 20252 (E-4)

1 1/2" P-142 F 20228 (E-12)

(G-5) DM 20829 DM-1 1/2"

WL-P-91A & B 20829 (H-12) WL-1 1/2"

DM 20829 (G-12) DM-1 1/2"

WL-P-91A & B 20829 (H-6) WL-1 1/2"

P-142 20228 A (C-11) 1 1/2"

P-142 20228 B (C-11) 3/4"

P-142 20353 Q (E-5) MSS-1/2"

TK-87A & B 20228 C (C-12) 1"

WS-TK-228 20742 K (F-6) DM-3/4"

WS 20735 B (D-3) 2 LINES WS-2"

20226 E (D-3) 3"

WS-TK-76 20735 C WS-2"

DR 435 20226 G (D-3)

DR 436 20226 F (D-3)

EVS 20780 P (B-12)

TK-87B 20228 E (F-7)

TK-87A 20228 D (F-8)

20226 B (D-3)

20226 C (D-3)

20226 D (C-3)

20227 F (C-11)

20227 G (C-11)

DR 486 20225 C (B-9)

20227 B (C-8)

20227 A (C-8)

20227 C (C-8)

WL-P-91A 20829 J (C-11) WL-3/4"

FUNNEL NO. 2

WL-P-91B 20829 K (C-7) WL-3/4"

FUNNEL NO. 1

WL-TK-59A & B 20829 M (G-5, G-7) 2 LINES WL-6"

WL-TK-59A&B 20829 L (F-8, F-9) 2 LINES WL-2"

WL-P-91A&B 20829 D (B-11, B-7) 2 LINES WL-3/4"

WL-P-91A 20353 A (E-5) MSS-1/2"

WL-P-91B 20353 B (E-5) MSS-1/2"

ASC-P-249B 20984 A (D-5) ASC-1/2"

ASC-S-148 20984 B (C-5) ASC-1 1/2"

ASC-P-249A 20984 C (D-7) ASC-1/2"

ASC-S-149 20984 D (C-7) ASC-1 1/2"

RS-1/2 RS-P-13A & B A 20252 4 LINES (A-7)

MSS-1/2" RS-P-13A R 20353 (E-5)

MSS-1/2" RS-P-13B S 20353 (E-5)

RS-4" RS-V77 & 76 B 20252 (C-9)

FL. EL. (-) 31'- 8"

DETAIL C-C

DRAINS ON THIS DRAWING

401	408	486
402	409	498
403	410	499
404	411	513
405	412	515
406	413	524
407	458	

CLEANOUT ON THIS DRAWING

1515

NOTES:

1. WORK THIS DRAWING WITH DRAWINGS 20216, 20218 THRU 20228.
2. ALL LINES, EQUIPMENT, COMPONENTS, & INSTRUMENTS HAVE SYSTEM PREFIX WLD UNLESS NOTED OTHERWISE.
3. ALL LINES, EQUIPMENT, COMPONENTS, & INSTRUMENTS ARE SAFETY CLASS NNS.
4. J LINES CAPPED TO ISOLATE UNIT 1 FROM UNIT 2.
5. △ INDICATES REVISION LEVEL.

REF. DRAWING NO.	REV	TITLE
9763-F-805633	9	WPB FLR. & EQUIP. DRAIN SYS. SHT. 4
9763-F-805619	11	WL STOR. & FILT.
9763-F-805644	1	WPB FLR. & EQUIP. DRAIN SYS. SHT. 2
9763-F-805634	3	WPB FLR. & EQUIP. DRAIN SYS. SHT. 5

REV	DATE	DSGN	CHKD	CE	DESCRIPTION
9	6/13/06	BCS	JM	DSM	INCORP MMOD 85-524 DCN-02
8	2/13/03	BCS	MPW	JM	INCORP MSE 01-288 REV. 8
7	6/17/98	MRB	BCL	VWS	INCORP DCR 98-32 CA8
6	1/4/91	HP	JM	BCL	INCORP. DCR 86-556 CA-8; REVISED: NOTE 3
5	8/28/87	MPW	PAL	RRC	ADDED: CONT NO'S; INCORP DCR 86-266
4	4/8/87	WDS	PAL	VWS	INCORP. DCR 87-0013
3	12/17/86	WDS	PAL	RRC	ADDED CONT. DWG. COORDS. DRAIN NO'S 458, 486 & 528. NOTE 5 AND NOTE FOR P&ID LEGENDS 1 & 2. REVISED CONT DWG NUMBERS AND REF DWG REVISIONS. DELETED ALPHA PREFIX FROM DWG NO'S IN NOTE 1.
2	6/16/86	DWS	DWS	RRC	INCORP. ECA 19/1161248 & 19/116172A ADDED DM CONT. CORRECTED STRAINER CONFIGURATION.
1	4/2/86	GD	JDM	WFD	ISSUED FOR OPERATIONS
0	3/24/85	GD	JNM	WFD	ISSUED FOR FIELD VERIFICATION

FPL ENERGY Seabrook Station

WASTE PROCESSING LIQUID DRAINS
WASTE PROCESSING BUILDING SUMPS

PID- 1-WLD-B20229

06/12/06

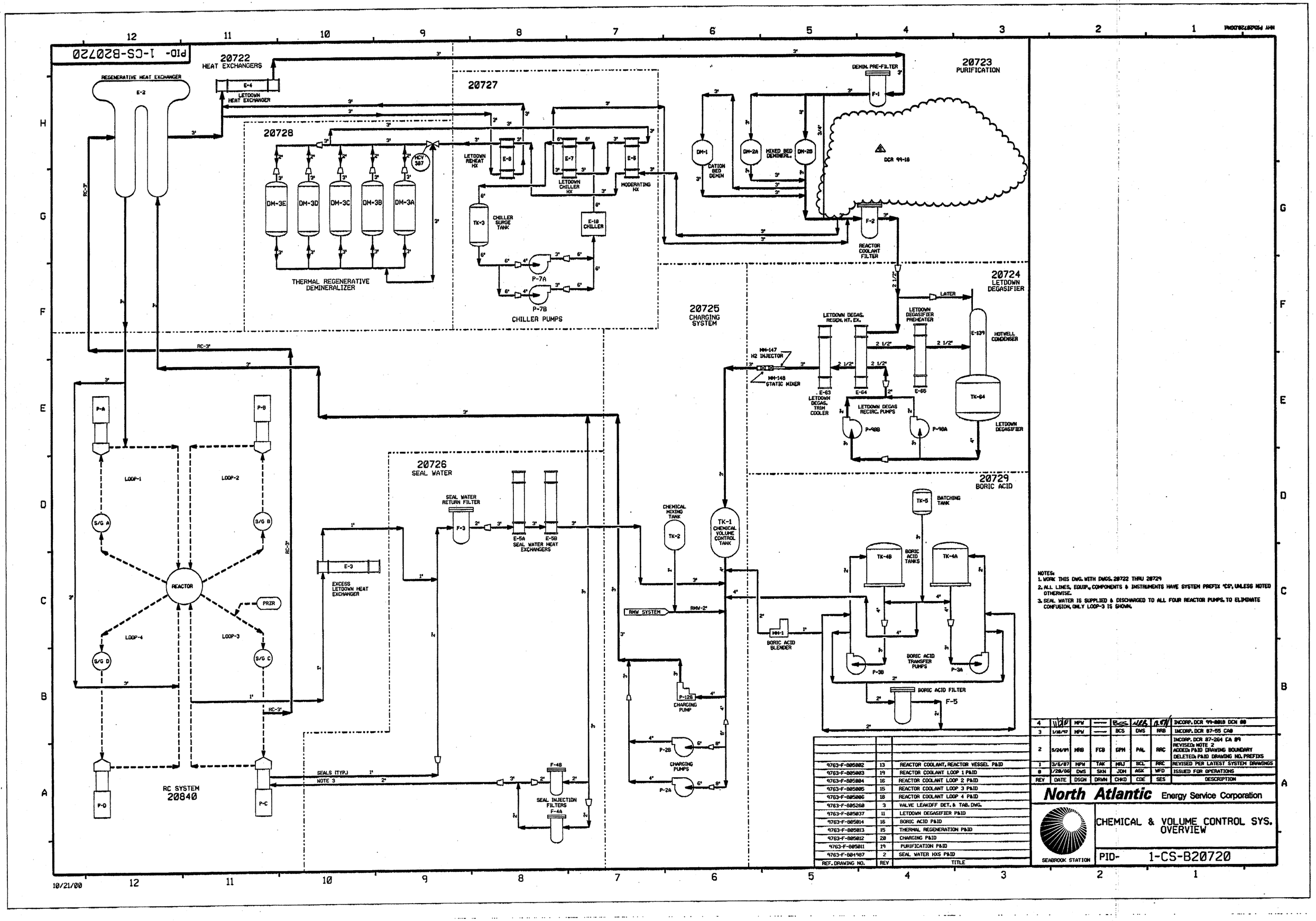

NOTES:
1. WORK THIS DWG. WITH DWGS. 20722 THRU 20729
2. ALL LINES, EQUIP., COMPONENTS & INSTRUMENTS HAVE SYSTEM PREFIX "CS", UNLESS NOTED OTHERWISE.
3. SEAL WATER IS SUPPLIED & DISCHARGED TO ALL FOUR REACTOR PUMPS. TO ELIMINATE CONFUSION, ONLY LOOP-3 IS SHOWN.

REF. DRAWING NO.	REV	TITLE
9763-F-805002	13	REACTOR COOLANT, REACTOR VESSEL P&ID
9763-F-805003	19	REACTOR COOLANT LOOP 1 P&ID
9763-F-805004	16	REACTOR COOLANT LOOP 2 P&ID
9763-F-805005	15	REACTOR COOLANT LOOP 3 P&ID
9763-F-805006	18	REACTOR COOLANT LOOP 4 P&ID
9763-F-805260	3	VALVE LEAKOFF DET. & TAB. DWG.
9763-F-805037	11	LETDOWN DEGASIFIER P&ID
9763-F-805014	16	BORIC ACID P&ID
9763-F-805013	15	THERMAL REGENERATION P&ID
9763-F-805012	20	CHARGING P&ID
9763-F-805011	19	PURIFICATION P&ID
9763-F-804987	2	SEAL WATER HXS P&ID

REV	DATE	DSGN	DRWN	CHKD	CDE	SES	DESCRIPTION
4	11/20/00	MPW	—	BCS	[illegible]	[illegible]	INCORP. DCR 99-0018 DCN 00
3	1/18/97	MPW	—	BCS	DWS	RRB	INCORP. DCR 87-55 CA0
2	5/24/89	MRB	FCB	GPM	PAL	RRC	INCORP. DCR 87-264 CA 09 REVISED: NOTE 2 ADDED: P&ID DRAWING BOUNDARY DELETED: P&ID DRAWING NO. PREFIXS
1	3/6/87	MPW	TAK	MRJ	BCL	RRC	REVISED PER LATEST SYSTEM DRAWINGS
0	1/20/86	DWS	SKN	JDH	ASK	WFD	ISSUED FOR OPERATIONS

North Atlantic Energy Service Corporation

SEABROOK STATION

CHEMICAL & VOLUME CONTROL SYS. OVERVIEW

PID- 1-CS-B20720

INSIDE REACTOR CONTAINMENT

OUTSIDE REACTOR CONTAINMENT (PAB)

MECHANICAL PENETRATION AREA

SAFETY CLASS 2 REGENERATIVE HEAT EXCHANGER E-2

E-3 EXCESS LETDOWN HEAT EXCHANGER SAFETY CLASS 2

E-4 LETDOWN HEAT EXCHANGER SAFETY CLASS 2 & 3

CNTMT. TR A 20219 (D-6)

CNTMT. TR B 20219 (D-6)

RCP 20843 M (A-5) SUCTION

RC-3"

PRZR A 20846 (E-4) RC-E-1Ø

RCL-4 E 20844 (C-3)

RCL-1 L 20841 (D-4)

RCP DISH 20843 P (A-12)

CNTMT TR. C 20219 (D-3)

RCDT 20218 A WLD-TK-55 (F-7)

RCP SEAL WTR 20726 F OUTLET (D-12)

CC LOOP B 20214 (F-11)

RCP SEAL WTR 20726 F (D-12)

RC-TK-11 PRT 20846 G (G-12)

LTDN REHT HX G 20727 (B-5) E-8

LTDN REHT HX J 20727 (C-3) E-8

FD-152 TC

FD-153 TC

FD-203 TC

DR-141 TC

DR-141 DR

DR-141 V

SET @ 600 PSIG

SET @ 240 PSIG

CVCS A 20727 (D-3)

DM-PRE FILTER 20723 B F-1 (H-3)

SS & HOOD 20519 R SS-CP-166A (B-4)

WLD DR 218 20222 Y (C-4)

CC LOOP A 20206 (B-11)

CC LOOP A 20206 (B-1Ø)

WLD DR 197 20727 S (A-6)

SI A 20449 (F-12)

RH A 20662 (H-1Ø)

P-12B 20725 E (E-12)

F-4B 20726 C (C-3)

LO

SEE NOTE 1Ø

SEE NOTE "4"

NOTE "5"

NOTE 7

EC*272299 15

DETAIL A

FLEXIBLE HOSE OR TUBING LOOP (NOT SHOWN)

TYPICAL VALVE STEM LEAKOFF PIPING (SEE NOTE 8)

SEE DETAIL "A" (B-5) (TYP)

FOR P&ID REFERENCE DRAWINGS, SYMBOLS AND ABBREVIATIONS REFER TO DRAWINGS P&ID - LEGEND 1 AND P&ID - LEGEND 2

NOTES:

1) WORK THIS DWG WITH DWGS. 20720 & 20723 THRU 20729.
2) ALL LINES, EQUIP., COMPONENTS & INSTRUMENTS HAVE SYSTEM PREFIX "CS", UNLESS NOTED OTHERWISE.
3) VENT AND DRAIN CODE BREAKS ARE AT THE DOWNSTREAM END OF THE OUTER ISOLATION VALVE PER 1-NHY-8Ø5111 UNLESS NOTED OTHERWISE.
4) DELAY TIME RCS TO HERE MUST BE 45 SECONDS MIN.
5) VALVE FAILS WITH FLOW TO SEAL WATER RETURN FILTER.
6) DELETED
7) SPRING LOADED CHECK VALVE.
8) REFER TO DRAWING VSL-2Ø774, FOR VALVE LEAKOFFS
9) INSTRUMENT REFERENCE.
   - (A) TO CONTROL VALVE TV-13Ø ON DWG. 2Ø2Ø6.
   - (B) TO 3-WAY VALVE TCV-129 ON DWG. 2Ø723.
   - (C) TO TIS-382 ON DWG. 2Ø728.
   - (D) TO TCV-381A, TE-381, TCV-386 & TE-386 ON DWG. 2Ø727.
   - (E) FOR AUTO CLOSE SIGNALS SEE LOGIC 1-NHY-5Ø3367
10) TW-126 AND TW-127 TO BE ABANDONED IN PLACE.

PORTIONS OF THIS DRAWING ARE

NUCLEAR SAFETY RELATED

REV	DATE	DSGN	CHKD	CE	DESCRIPTION
15	5/11/11	JM	BCS	TAS	INCORP. EC*272299
14	10/11/09	BCS	JM	RRB	INCORP. EC 12368
13	10/17/06	BCS	JM	RRB	INCORP. DCR Ø2-ØØ2 DCN-09
12	10/14/06	BCS	JM	RRB	INCORP. DCR Ø5-Ø23 DCN ØØ & MMOD Ø3-5Ø4 DCN ØØ PARTIAL INCORP. DCR Ø2-ØØ2 DCN-09
11	10/16/03	BCS	MPW	RRB	INCORP. DCR Ø2-ØØ2 DCN Ø1, Ø2, Ø3
1Ø	9/12/02	BCS	JM	TAS	INCORP. DCR ØØ-ØØ1 DCN ØØ
9	6/11/ØØ	MPW	BCS	RWM	INCORP. DCR 99-18 DCN ØØ
8	6/1Ø/99	DWS	RWS	DJM	INCORP MMOD 97Ø618 DCN=ØØ
7	4/13/92	MRB	BCL	JEV	INCORP. MMOD 91-515 CAØ
6	12/5/89	MRB	PAL	WFD	INCORP. DCR 89-12 CAØ
5	5/9/89	MRB	GPM	GRM	INCORP. DCR B7-299 CA Ø4 REVISED: NOTE 2
4	1Ø/3Ø/87	GPM	DWS	PAS	REVISED: NOTE 3 & 8, PIPING PER AS INSTALLED CONFIGURATION, DET "A" NOTE. ADDED: NOTE AT CS-V921 AND DWG CONT COORD. DELETED: REF DWG'S, NNS-1 CL BOUNDARY.
3	11/26/86	MRJ	WRD	RRC	ADDED DWG CONT COORD'S. REMOVED CODE FLAGS PER NOTE 3, LEAKOFF VLV CODES PER DETAIL A. REVISED DRAIN PIPING PER ASBUILT CONDITION.
Ø	1/2Ø/86	DWS	JDM	WFD	ISSUED FOR OPERATIONS

REF. DRAWING NO.	REV	TITLE
9763-F-8Ø5Ø11	19	CVCS PURIFICATION P & ID
9763-F-8Ø5Ø13	15	CVCS THERM REGEN P & ID

NEXTera ENERGY SEABROOK

SEABROOK STATION

CHEMICAL & VOLUME CONTROL SYS
HEAT EXCHANGERS
DETAIL

PID- 1-CS-B20722

5/10/11

NHY P1D20723.DGN;1

2" FLEX HOSE-50'

TK-15 PORTABLE RESIN FILL TANK

MATING FLANGE FOR CATION & MIXED BED DEMINERALIZERS

DETAIL "A"
(F-11) (F-9) (F-8)

RMW-2"

RMW-V43

RMW-V42

RMW-P-16A & B
H 20360 (C-6)

WLD DR 232
20483 A (C-8)

WLD DR 232
20483 C (C-8)

WLD DR 232
20483 B (C-8)

V83 V91 V100

V86 V90 V98

3/4" 1/2"-V488 FE 136 FI 136 1/2"-V489 3/4"

RESIN FILL CONN DET 'A'-NOTE 4

V87 V89 V97

V532 V534 V536

DM-1 CATION BED DEMIN. SAFETY CLASS 3

DM-2A MIXED BED DEMIN. SAFETY CLASS 3

DM-2B MIXED BED DEMIN. SAFETY CLASS 3

PDIS 7487 PDIS 7488 PDIS 7489

V533 V535 V537

V84 V70 V48 V71 V85 V92 V95 V49 V96 V93 V99 V103 V50 V104 V101

RS-3" RS-4"

V120 SS-CP-166A 20519 T (C-4)

V920 V137 V945 V72 V282 FO V74 V75 V118

CR 08-07452

CS-V302
E 20727
MOD. HX. E-6 (E-12)

MOD. HX. E-6 (C-12)
20727 F

NOTE 5 V744 RS-TK-79A & B 20252 P (G-4)

RS-V67 NOTE5 RS-V59 RS-P-13A & B 20252 D (G-3)

PI 135 B PI 135 A

V110 V109 V108 V111 V107 V112 V540

3/4" WLD DR 218 20222 Y (D-4)

F-1 DEMIN. PRE-FILTER

3/4" 20223 B (E-4) V114

NOTE 3 TCV 129 V915 V106 V538

SF-P-272 D 20484 (G-3) SF-V110

CS-V326 B 20722 (H-3) LTDN HX E-4

20222 Y (D-4) WLD. DR 218 V78 V79 PI 134

V76 V80 F-2 REACTOR COOLANT FILTER V1190 V77 V117

3/4" PLUG

LTDN DEGAS 20724 C (G-12) TK-64

SEE DETAIL 'B' (A-6) (TYP) V963 SET @ 300 PSIG V834

WLD 20223 A (B-10) SUMP 'A'

RH-P-8A & B
RH 20662 B (C-7)
SI 20448 B (F-12)

3/4" WLD DR 183 (E-4) 20223 C V502

FLEXIBLE HOSE OR TUBING LOOP (NOT SHOWN) 1/2" TYPICAL VALVE STEM LEAKOFF PIPING (SEE NOTE 6)

DETAIL B

FOR P&ID REFERENCE DRAWINGS, SYMBOLS AND ABBREVIATIONS REFER TO DRAWINGS P&ID - LEGEND 1 AND P&ID - LEGEND 2

NOTES:
1. WORK THIS DWG WITH DWGS. 20720, 20722, & 20724 THRU 20729,
2. ALL LINES, EQUIPMENT, COMPONENTS & INSTRUMENTS HAVE SYSTEM PREFIX 'CS', UNLESS NOTED OTHERWISE.
3. VALVE FAILS WITH FLOW BY-PASSING THE DEMINERALIZERS & GOING TO CS-F-2
4. BLIND FLGS. INSTALLED WITHOUT GASKET
5. THIS VALVE TO BE CLOSED PRIOR TO ANY RESIN SLUICING OPERATIONS.
6. REFER TO DRAWING VSL-20774 FOR VALVE LEAKOFFS.
7. INSTRUMENT REFERENCE (A) LETDOWN EXCHANGER CS-E-4 & CS-E-8 OUTLET TEMP. TIS-129 & TIS-382 ON DWG. 20722
8. VENTS, DRAINS AND TEST CONNECTION CODE BREAKS ARE AT THE DOWNSTREAM END OF THE OUTER ISOLATION VALVE PER 1-NHY-805111, UNLESS NOTED OTHERWISE.
9. △ INDICATES REVISION LEVEL.
10. DELETED
11. DELETED

PORTIONS OF THIS DRAWING ARE

NUCLEAR SAFETY RELATED

REV	DATE	DSGN	CHKD	CE	DESCRIPTION
20	7/31/08	JM	BCS	RRB	INCORP. CR 08-07452 REV 00
19	11/16/06	JM	BCS	RRB	INCORP MMOD 03-504 DCR 00
18	11/2/00	MPW	BCS	RPN	INCORP DCR 99-18 DCN 00
17	6/12/00	BCS	DWS	RWM	PARTIAL INCORP DCR 99-18 DCN 00
16	1/10/97	MPW	BCS	RRB	INCORP DCR 87-55 CA0 AND DCN 01
15	3/21/96	BCS	DWS	RJF	INCORP MMOD 940574 CA*01
14	2/28/96	DWS	BCS	VWS	INCORP MMOD 940574 CA*0
13	3/4/94	MRB	BCL	GRM	INCORP. MMOD 92-553, CA01
12	4/5/93	BCL	MPW	WFZ	MMOD 91-507, CA0
11	4/13/92	MRB	BCL	JEV	MMOD 91-515, CA0
10	10/8/91	MRB	JM	ES	INCORP. MMOD 91-511 CA0 AND MMOD 91-625, CA0
9	2/26/91	MRB	RMC	BCL	INCORP. MMOD 90-648 CA01
8	9/24/90	MRB	BMC	BCL	INCORP MMOD 90-516 CA0
7	5/24/89	MRB	GPM	RRC	INCORPORATED DCR 87-264 CA 09 REVISED: NOTE 2
6	5/25/88	GPM	APL	DJM	INCORP. DCR 87-323 REVD: PIPING PER AS INSTALLED CONF.; VALVE POSITION PER DWG. 506272 ADDED: DETAIL B, NOTE AT CS-V963 & CLASS DESIGNATION. DELETED: REF. DWG. NNS-1 CL. BOUNDARY
5	3/20/87	MRJ	WDS	RRC	ADDED 3" AND FLANGE PER ECA 99/116756A ADDED NOTE AND DWG COORD'S. FOR DETAIL A, ADDED CONT FLAG LETTERS AND NOTE 9, DELETED DETAIL 'B'.
4	12/12/86	JDM	PAL	RRC	INCORP ECA 99/116756A
3	10/17/86	MAP	WRD	RRC	ADDED DWG LOC COORD, DELETED CLASS BREAKS & CODE BREAKS, ADDED NOTE 8 REVISED TO CLARIFY DUPLICATION OF ASSOCIATED SYSTEMS.
2	8/22/86	MPW	GRD	PHH	REINCORP ECA 99/114510A, INCORP NCR 82/1279F, DCN 68/177A. ADDED VALVES RM-V8026 THRU V8030. ADDED VALVE V8069 PER FP-71272. CORRECTED CONTINUATIONS & REVD PER AS-BUILT CONFIG.
1	6/23/86	WES	DWS	RRC	INCORPORATED ECA 99/114510A, 19/100269A, INCORP 805011-REV 19
0	1/22/86	DWS	JDM	WFD	ISSUED FOR OPERATIONS

FPL ENERGY Seabrook Station

CHEMICAL & VOLUME CONTROL SYS. PURIFICATION DETAIL

PID- 1-CS-B20723

REF. DRAWING NO.	REV	TITLE
9763-F-805011	19	CVCS PURIFICATION P&ID

07/29/08

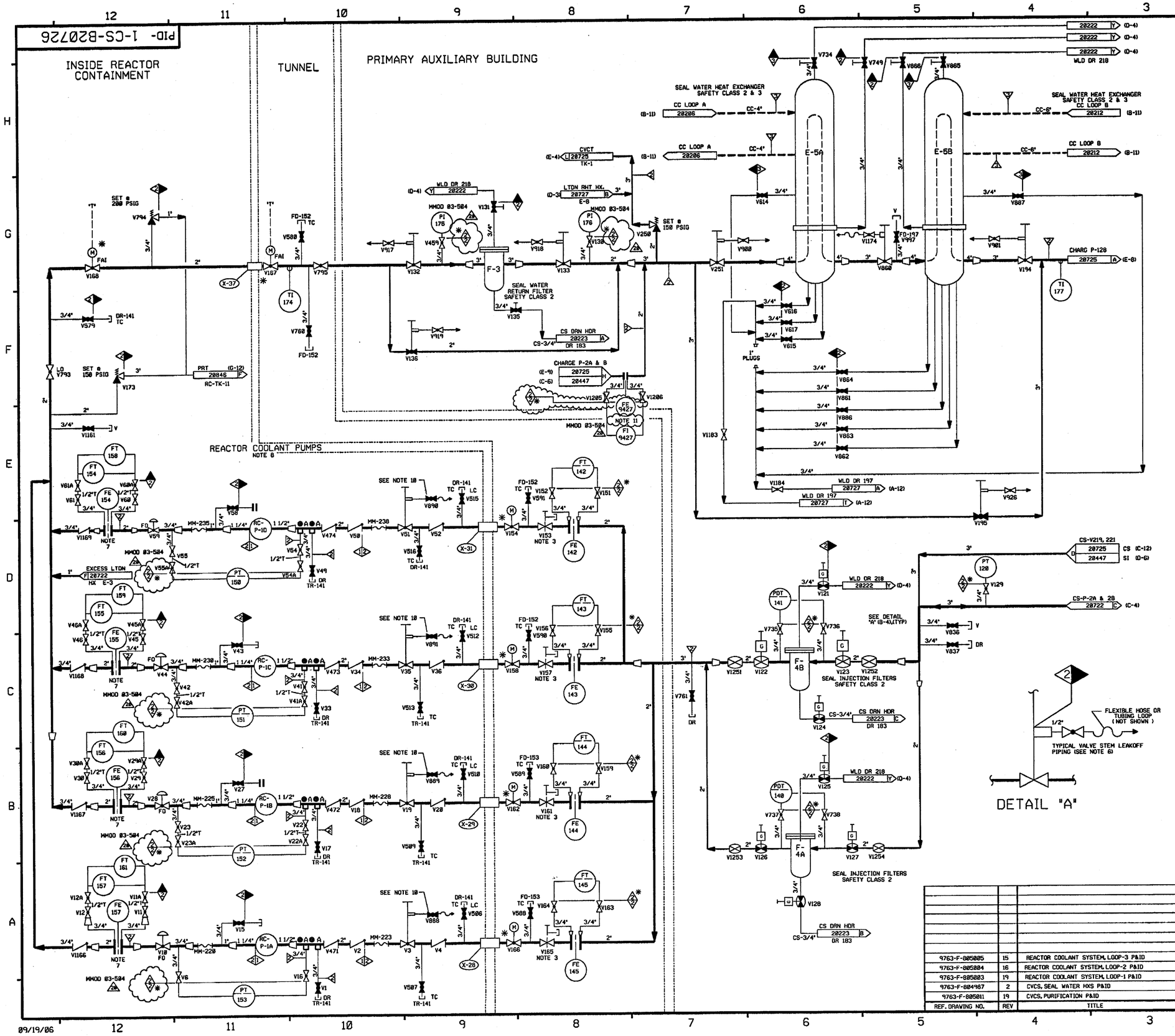

FOR P&ID REFERENCE DRAWINGS, SYMBOLS AND ABBREVIATIONS REFER TO DRAWINGS P&ID - LEGEND 1 AND P&ID - LEGEND 2

NOTES:

1. WORK THIS DWG WITH DWGS. 20720, 20722 THRU 20725 & 20727 THRU 20729.
2. ALL PIPING, VALVES, EQUIP. & INSTRUMENTS HAVE SYSTEM PREFIX "CS", UNLESS NOTED OTHERWISE.
3. 2" NEEDLE VALVE WITH 1" INTERNALS.
4. ● -INDICATES 3/8" FLOW RESTRICTOR INSTALLED. SEE APPLICABLE DETAIL ON DWG RC-20848.
5. VENTS, DRAINS & TEST CONN. CODE BREAKS ARE AT THE DOWNSTREAM END OF THE OUTER ISOLATION VALVE PER 1-NHY-805111, UNLESS NOTED OTHERWISE.
6. REFER TO DRAWING VSL-20774 FOR VALVE LEAKOFFS.
7. ORIFICE PLATE IS NON-ASME.
8. REACTOR COOLANT PUMPS SHOWN ON DWG'S:
   RC P-1A-20841
   RC P-1B-20842
   RC P-1C-20843
   RC P-1D-20844
9. △ INDICATES REVISION LEVEL.
10. VALVE STEM LEAK-OFF ISOLATION VALVES V888, V889, V890 & V891 ARE TO BE MAINTAINED CLOSED. VALVE STEMM LEAK-OFF TO BE CONSIDERED INOPERABLE.
11. NON-ASME FLOW ELEMENT. MMOD 03-504

PORTIONS OF THIS DRAWING ARE

NUCLEAR SAFETY RELATED

REV	DATE	DSGN	CHKD	CE	DESCRIPTION
20	9/22/06	BCS	JM	PJT	INCORP MMOD 03-504 DCN-00
19	4/23/99	DWS	BCS	GRM	INCORP DCR 980045 DCN#04
18	7/1/97	MPW	DWS	JEV	DCR 960007 CA#00 (FINAL)
17	6/13/97	DWS	MPW	JEV	INCORP DCR 970008 DCN#00 & DCR 960007 CA#00 (PARTIAL)
16	5/16/97	MPW	DWS	WFZ	INCORP. DCR 97-16 CA-0
15	2/25/97	BCS	MPW	RCP	INCORP. DCR 94-46 CA-0
14	11/28/95	MPW	BCS	RRB	INCORP. DCR 86-110 CA-0
13	4-14-94	BCL	MPW	DMD	INCORP. MMOD-93-517 CA-0
12	4-5-93	BCL	MPW	WFZ	INCORP. MMOD-91-507 CA-0

REF. DRAWING NO.	REV	TITLE
9763-F-805005	15	REACTOR COOLANT SYSTEM, LOOP-3 P&ID
9763-F-805004	16	REACTOR COOLANT SYSTEM, LOOP-2 P&ID
9763-F-805003	19	REACTOR COOLANT SYSTEM, LOOP-1 P&ID
9763-F-804987	2	CVCS, SEAL WATER HXS P&ID
9763-F-805011	19	CVCS, PURIFICATION P&ID

FPL ENERGY Seabrook Station

CHEMICAL & VOLUME CONTROL SYS.
SEAL WATER
DETAIL

PID- 1-CS-B20726

PID- 1-CS-B20725

NHY P1D:20725.DGN:1

FOR P&ID REFERENCE DRAWINGS, SYMBOLS AND ABBREVIATIONS REFER TO DRAWINGS P&ID - LEGEND 1 AND P&ID - LEGEND 2

NOTES:

1. WORK THIS DWG WITH 20720 THRU 20724 & 20726 THRU 20729. PORTIONS OF THIS DRAWING ARE DUPLICATED ON DRAWING SI-20447 DUE TO DUAL SYSTEM FUNCTIONS.
2. ALL LINES, EQUIPMENT, COMPONENTS & INSTRUMENTS HAVE SYSTEM PREFIX 'CS', UNLESS NOTED OTHERWISE.
3. MIN. OF 5' OF STRAIGHT RUN AFTER MIN. FLOW ORIFICE.
4. PERMANENT SPOOL PIECE INSTALLATION SHOWN TEMP. SPOOL PIECE WITH STRAINER, PRESSURE INSTRUMENTS, VENTS & DRAINS INSTALLED ONLY DURING FLUSHING OPERATIONS & IS REMOVED BEFORE START-UP.
5. VENT AND DRAIN CODE BREAKS ARE AT THE DOWNSTREAM END OF THE OUTER ISOLATION VALVE PER 1-NHY-805111 UNLESS NOTED OTHERWISE.
6. REFER TO DRAWING VSL-20774 FOR VALVE LEAKOFFS.
7. ORFICE PLATE NON-ASME
8. INSTRUMENT REFERENCE
   - (A) TO LCV-112A & LV-112A ON DWG. 20724.
   - (B) TO WG-PIC-8156 ON P&ID WG-20773
   - (G) TO LCV-112E & LCV-112D ON DWG. 20233.
9. △ INDICATES REVISION LEVEL.
10. CONNECTION USED FOR PRE-PLANNED MAKEUP STRATEGY. SEE FP59989.

PORTIONS OF THIS DRAWING ARE

NUCLEAR SAFETY RELATED

REV	DATE	DSGN	CHKD	CE	DESCRIPTION
29	4/14/11	GPS	JM	RJF	INCORP. EC-12725
28	03/17/10	BCS	JM	RJF	INCORP. EC 12725
27	10/29/09	BCS	JM	TAS	INCORP. EC 12368
26	1/31/08	JM	GPS	RJF	INCORP. MMOD 03-504 DCN00 & MSE 07-183 REV 00
25	5/19/03	BCS	JM	MPW	REINCORP. MSE 02-312 REV. 00
24	3/5/03	BCS	JM	MPW	INCORP. MSE 02-312 REV. 00
23	5/12/02	MPW	JM	RRB	PARTIAL INCORP. DCR 02-0002 DCN 00
22	8/08/01	JM	BCS	RRB	INCORP. DCR 98-0048 DCN 00
21	4/05/01	BCS	MPW	RRB	PARTIAL INCORP. DCR 98-0048 DCN 00
20	11/7/00	BCS	MPW	RRB	INCORP. DCR 98-0052 DCN 00
19	11/2/00	MPW	BCS	RPN	INCORP. DCR 99-0018 DCN 00
18	10/18/00	BCS	MPW	WA	INCORP. DCR 99-0036 DCN-00
17	10/13/00	BCS	MPW	JCM	INCORP. MMOD 99-507 DCN-00

REF. DRAWING NO.	REV	TITLE
9763-F-805023	13	CONTAINMENT SPRAY SYSTEM P&ID
9763-F-805010	18	SAFETY INJECTION SYS HIGH HEAD PID
9763-F-805012	20	CVCS CHARGING P & ID

NEXTera ENERGY SEABROOK

SEABROOK STATION

CHEMICAL & VOLUME CONTROL CHARGING SYSTEM DETAIL

PID- 1-CS-B20725

04/07/11

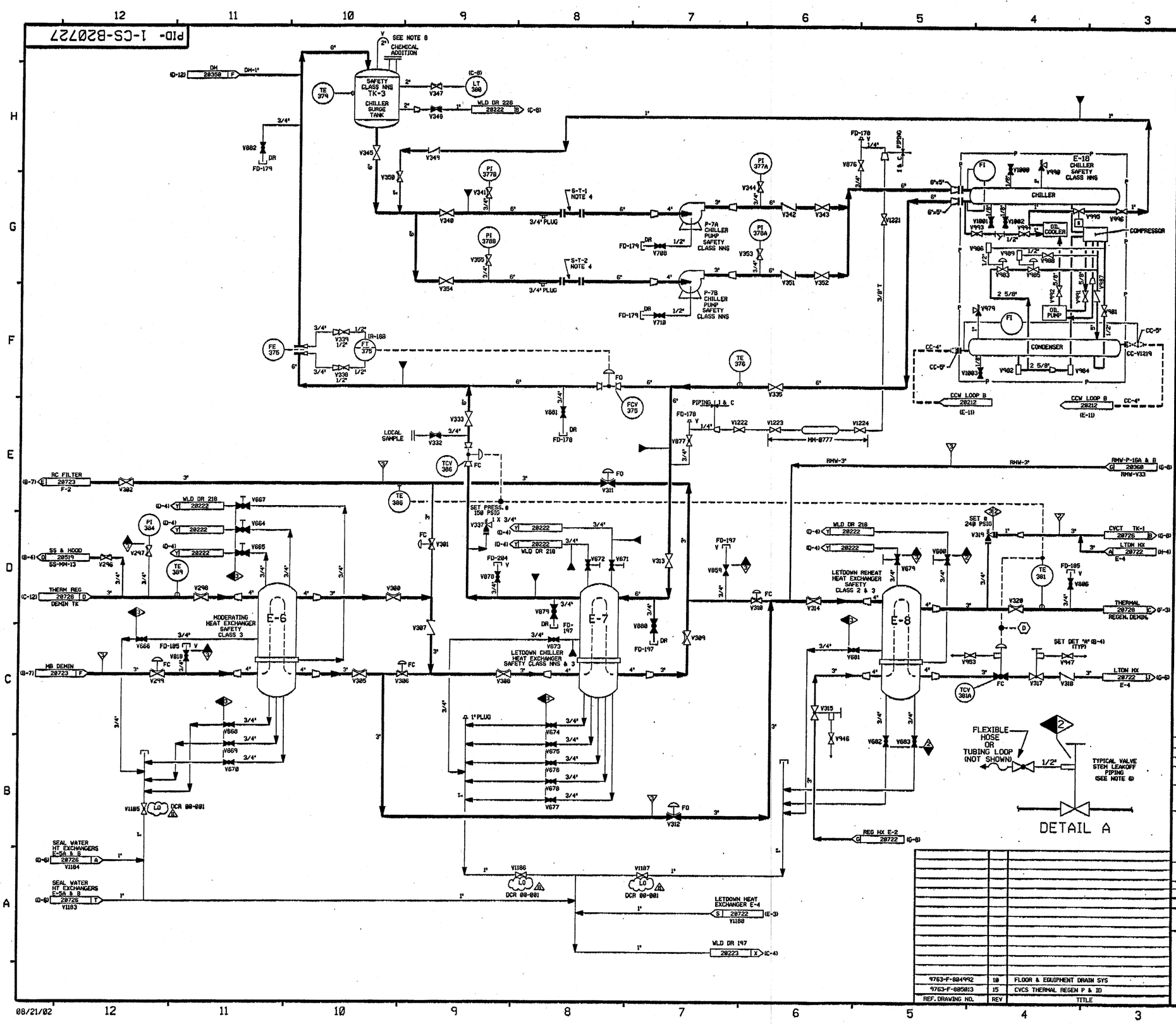

FOR P&ID REFERENCE DRAWINGS, SYMBOLS AND ABBREVIATIONS REFER TO DRAWINGS P&ID - LEGEND 1 AND P&ID - LEGEND 2

NOTES:

1) WORK THIS DWG WITH DWGS 20720 THRU 20726, 20728 & 20729.
2) ALL LINES, EQUIPMENT, COMPONENTS & INSTRUMENTS HAVE SYSTEM PREFIX "CS", UNLESS NOTED OTHERWISE
3) MAIN FLOW SHOWN DURING BORATION PHASE.
4) PERMANENT SPOOL PIECE INSTALLATION SHOWN, TEMP. SPOOL PIECE WITH STRAINER, PRESS. INSTR., VENTS & DRAINS INSTALLED ONLY DURING FLUSHING OPERATIONS AND IS REMOVED BEFORE START-UP.
5) VENT AND DRAIN CODE BREAKS ARE AT THE DOWNSTREAM END OF THE OUTER ISOLATION VALVE PER 1-NHY-805111 UNLESS OTHERWISE NOTED.
6) REFER TO DRAWING VSL-20774 FOR VALVE LEAKOFFS.
7) INSTRUMENT REFERENCES:
   (D) TO CONTROL VALVE TCV-381B ON DWG. B20722
8) WHEN CHILLER LOOP IS IN DRY LAYUP, NITROGEN IS SUPPLIED THROUGH THE TANK VENT. (SEE PID NO-20136)

PORTIONS OF THIS DRAWING ARE

NUCLEAR SAFETY RELATED

REV	DATE	DSGN	DRWN	CHKD	CDE	SES	DESCRIPTION
8	9/12/02	BCS	——	[illegible]	——	[illegible]	INCORP DCR 00-001 DCN-00
7	6/6/00	BCS	——	MRB	MPW	SPF	INCORP MMOD 98-560 DCN-00
6	12/9/94	MPW	——	BCL	DWS	MHO	INCORP MMOD 93-545 CA0
5	3/20/89	MRB	RMC	GPM	APL	DJM	INCORPORATED DCR 88-10 CA1 REVISED: NOTE 2 & 5 ADDED: CONTINUATION COORDINATES.
4	5/25/86	GPM	RMC	APL	BCL	DJM	INCORP. DCR 87-323 ADDED: SET PRESS. FOR V337 PER WESTINGHOUSE "PRECAUTIONS, LIMITATIONS & SET POINTS".
3	10/30/87	GPM	JM	DWS	BCL	PAS	REV'D: NOTE 6, EQUIP CL PER UE&C P&ID, PIPING PER AS INSTALLED CONFIGURATION, AND ECA 99/806183C. DET "A" NOTE, CCW PIPING TO E-18, ADDED: NOTE FOR CS-V-947, CONT. COORD'S, P&ID REF NOTE, FLG'S FOR CS-V-337 & 319. DELETED: REF DWG, TEST BOUNDARY SYMBOL, NNS-1 CL BOUNDARY.
2	9/12/86	MPW	DWS	MAP	BCL	RRC	INCORP. ECA 99/806183C. ADDED SKID PIPING & CLOSED V859, REV CONTINUATION, REF REV & NOTE 6
1	6/16/86	TAK	TAK	BCL	JMCS	RRC	INCORP ECA 99/113343A
0	1/20/86	DWS	GBS	JDM	ASK	WFD	ISSUED FOR OPERATIONS

REF. DRAWING NO.	REV	TITLE
9763-F-804992	10	FLOOR & EQUIPMENT DRAIN SYS
9763-F-805013	15	CVCS THERMAL REGEN P & ID

North Atlantic Energy Service Corporation

SEABROOK STATION

CHEMICAL VOLUME & CONTROL SYSTEM THERMAL REGENERATION DETAIL

PID- 1-CS-B20727

PID- 1-CS-B20728

FOR P&ID REFERENCE DRAWINGS, SYMBOLS AND ABBREVIATIONS REFER TO DRAWINGS P&ID - LEGEND 1 AND P&ID - LEGEND 2

DM-3E THERMAL REGENERATIVE DEMINERALIZER SAFETY CLASS 3

DM-3D THERMAL REGENERATIVE DEMINERALIZER SAFETY CLASS 3

DM-3C THERMAL REGENERATIVE DEMINERALIZER SAFETY CLASS 3

DM-3B THERMAL REGENERATIVE DEMINERALIZER SAFETY CLASS 3

DM-3A THERMAL REGENERATIVE DEMINERALIZER SAFETY CLASS 3

NOTE 7 RESIN FILL (TYP.)

VALVE STEM LEAKOFF PIPING (SEE NOTE 6)

FLEXIBLE HOSE OR TUBING LOOP (NOT SHOWN)

NOTES 4, 5

NOTES:
1) WORK THIS DWG WITH DWGS 28728, 28722 THRU 28727 & 28729.
2) ALL PIPING, VALVES, EQUIPMENT & INSTRUMENTS HAVE SYSTEM PREFIX "CS" UNLESS NOTED OTHERWISE.
3) MAIN FLOW IS SHOWN IN THE BORATION PHASE.
4) ALL VALVES ALIGNED FOR BORON REMOVAL (DILUTION).
5) FAILS TO BORON RELEASE POSITION (BORATION)
6) THESE VALVES TO BE CLOSED PRIOR TO ANY RESIN SLUICING OPERATIONS.
7) INSTALLED BLIND FLANGES WITHOUT GASKET.
8) REFER TO DRAWING VSL-28774 FOR VALVE LEAKOFFS.
9) INSTRUMENT REFERENCES:
   (A) TO THERMOWELL TIS-12A ON DWG 28722

PORTIONS OF THIS DRAWING ARE
NUCLEAR SAFETY RELATED

REV	DATE	DSGN	DRWN	CHKD	CDE	SES	DESCRIPTION
5	3/19/96	BCS	—	DWS	MPW	VWS	INCORP MMOD 948574 CA#81
4	2/28/96	DWS	—	BCS	MPW	VWS	INCORP MMOD 948574 CA#8
3	4/13/95	MRB	—	BCL	DWS	JEV	INCORP. MMOD 91-515 CA#2
2	8/21/87	GPH	HIW	BCL	WDS	RRC	REVD NOTE 1, 2 & 9, REF DWG REV NO. ADDED P&ID REF DWG NOTE, COMT COORD'S & NOTES FOR VLV HCV 387 DELETED, REF DWG, NMS-1 CL. BOUNDARY
1	6/22/88	BCL	TAK	WRD	VNK	PHH	ADDED CONTINUATION DETAILS, REVISED VALVE TYPE AND NOTE 8.
0	1/28/88	DWS	GJK	JDM	ASK	WFD	ISSUED FOR OPERATIONS

REF. DRAWING NO.	REV	TITLE
9763-F-885013	15	CVCS THERMAL REGENERATION P & ID

North Atlantic Energy Service Corporation

SEABROOK STATION

CHEMICAL VOLUME & CONTROL SYS
THERMAL REGENERATION
DETAIL

PID- 1-CS-B20728

03/20/96

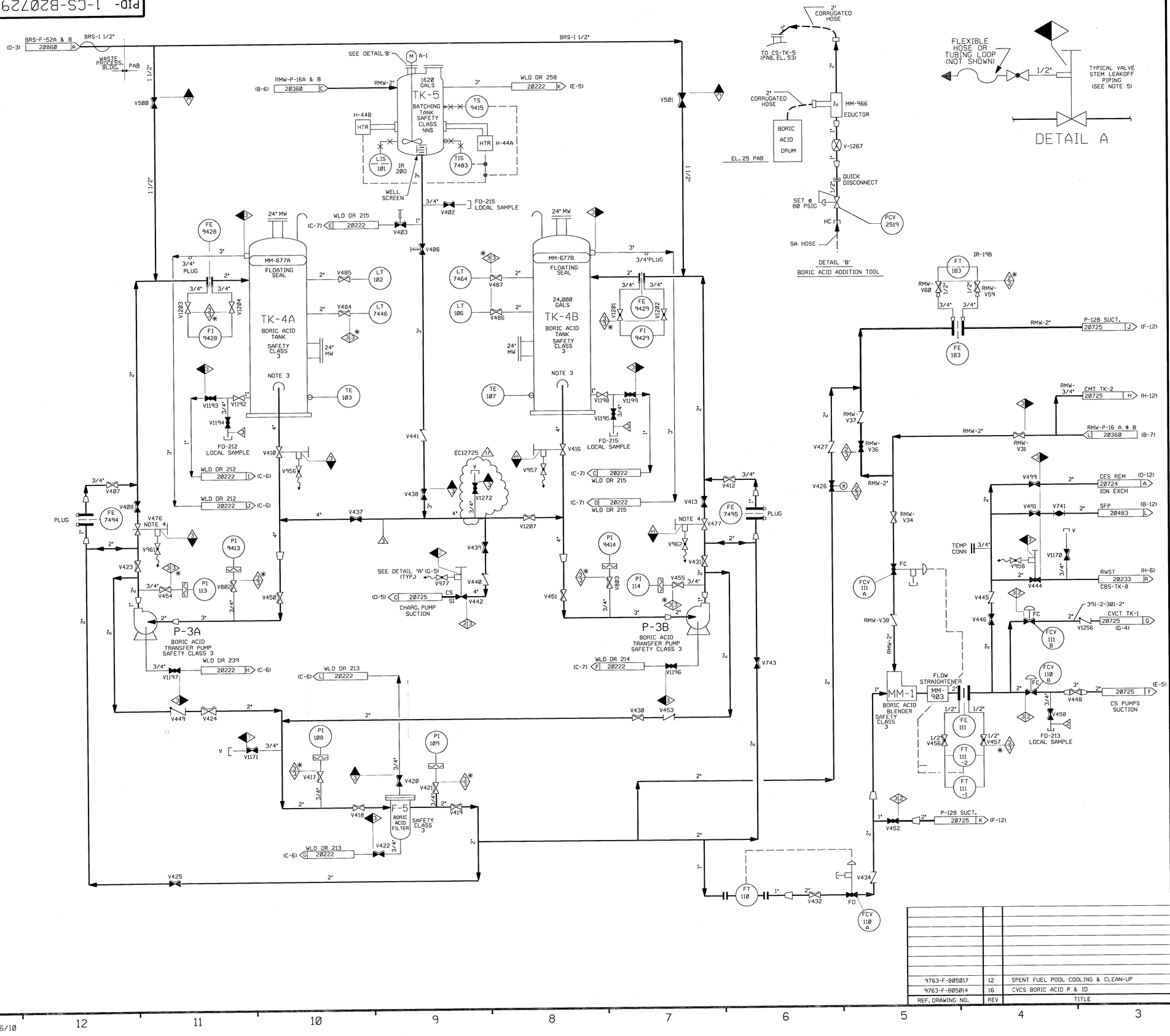

FOR P&ID REFERENCE DRAWINGS, SYMBOLS AND ABBREVIATIONS REFER TO DRAWINGS P&ID - LEGEND 1 AND P&ID - LEGEND 2

NOTES:

1. WORK THIS DWG WITH 20720 & 20722 THRU 20728.
2. ALL LINES, EQUIPMENT, COMPONENTS AND INSTRUMENTS HAVE SYSTEM PREFIX CS, UNLESS NOTED OTHERWISE.
3. ALL BORIC ACID & BATCHING TANK EQUIP & PIPING SHOWN IS LOCATED IN AREA MAINTAINED AT A CONTROLLED TEMPERATURE
4. VALVE IS LOCKED INTO POSITION DURING OPERATIONAL TESTING TO LIMIT PUMP RUNOUT TO 75 GPM WHEN TRANSFERRING BATCHING TANK CONTENTS TO BORIC ACID TANK.
5. REFER TO DWG VSL-20774 FOR VALVE LEAKOFFS.
6. DELETED

PORTIONS OF THIS DRAWING ARE

NUCLEAR SAFETY RELATED

REV	DATE	DSGN	CHKD	CE	DESCRIPTION
17	4-27-10	BCS	MW	RAB	PARTIAL INCORP EC 12725
16	11/16/06	JM	BCS	RRB	INCORP MMOD 03-504 DCN 00
15	1/27/05	BCS	JM	RRB	INCORP. CR 05-00234 REV. 00
14	10/16/03	BCS	MPW	RRB	INCORP. DCR 02-013 DCN-00, 01, 02
13	8/27/03	BCS	JM	MR	INCORP. MMOD 03-515 DCN-00
12	5/12/03	JM	MPW	BCS	INCORP. CR 02-07592 REV 00
11	4/22/99	DWS	RWS	GRM	INCORP DCR 980052 DCN*00, DCR 980045 DCN*00 & REINCORPORATED DCR 950030 DCN*03
10	9/16/97	BCS	MPW	BAW	INCORP DCR 95-30 DCN 03
9	6/13/97	MPW	DWS	WNF	INCORP DCR 95-30 DCN 00
8	10/8/92	DWS	MRB	DMP	INCORP DCR 890073 CA*0 & 1
7	4/20/92	MRB	BCL	RRB	INCORP. MMOD 91-515 CA0
6	12/16/91	FCB	RMC	BCL	INCORP. MMOD 91-511 CA01
5	3/16/89	MRB	GPM	MJY	INCORPORATED DCR 88-142 CA0 REVISED NOTE 2, V403 & V406 OPERATOR SYMBOL
4	12/15/87	GPM	DWS	PAG	REVISED NOTE 5, VALVE NO. ADDED FLO.S. AT FT110, PLUGS AT 7494 & 7495, NOTE FOR V955, CONT COORD'S CLASS DESIGNATION, P&ID REF DWG NOTE & HEAC P&ID REF. DWG. DELETED; REF. DWG. NNS-1 CL BOUNDARY, REDUNDANT SYS DWG. CONT.
3	10/6/86	JDM	MAP	RRC	INCORP ECA'S 88/118317A & 88/118448A
2	8/22/86	BCL	WRD	PHH	REVISED TO REFLECT AS-BUILT CONFIGURATIONS, ADDED HEAT TRACING & CONTINUATION REF. REVISED NOTE 5.
1	6/13/86	JDM	DWS	RRC	UPDATE REF DWG REV NO & REVISE ACCORDINGLY. INCORP NCR 87/1179D, REVISED RMW SUPPLY TO TK-5. INCORP ECA 99/112818A & ECA 19/8002028.
0	1/22/86	DWS	JDM	WFD	ISSUED FOR OPERATIONS

REF. DRAWING NO.	REV	TITLE
9763-F-805017	12	SPENT FUEL POOL COOLING & CLEAN-UP
9763-F-805014	16	CVCS BORIC ACID P & ID

NEXTera ENERGY SEABROOK

SEABROOK STATION

CHEMICAL & VOLUME CONTROL SYS. BORIC ACID DETAIL

PID- 1-CS-B20729

4/26/10

PID- 1-CS-B20724

NHY PID20724.DGN1

FOR P&ID REFERENCE DRAWINGS, SYMBOLS AND ABBREVIATIONS REFER TO DRAWINGS P&ID - LEGEND 1 AND P&ID - LEGEND 2

NOTES:
1. WORK THIS DWG WITH DWGS 20720, 20722, 20723, & 20725 THRU 20729.
2. ALL PIPING, VALVES, EQUIP & INSTRUMENTS HAVE SYSTEM PREFIX "CS", UNLESS NOTED OTHERWISE.
3. VALVE FAILS WITH FLOW TO CVCT
4. VALVE FAILS WITH FLOW TO LCV-112A
5. SEE DWG 20354 FOR WATER SUPPLY TO PUMP DOUBLE MECHANICAL SEALS.
6. REFER TO DWG VSL-20774 FOR VALVE LEAKOFFS.
7. INSTRUMENTATION REFERENCES
   (A) CHEM VOL CONTROL TK (CS-TK-1) LEVEL LT-112E & LT-185 ON DWG CS-20725
   (D)(E)(F) TO 1-CS-CV-3, 1-CS-CV-4 (AS-20570), 1-DM-V285 (DM-20350) AND 1-CS-FV-7456 (CS-20724).
8. △ INDICATES REVISION LEVEL

PORTIONS OF THIS DRAWING ARE

NUCLEAR SAFETY RELATED

REV	DATE	DSGN	CHKD	CE	DESCRIPTION
16	4/16/08	JM	BCS	JAL	INCORP DCR 02-002 DCN-12, 15
15	9/28/06	JM	SPF	RRB	INCORP MMOD 03-504 DCN 00
14	3/21/06	BCS	JM	RRB	INCORP MSE 05-160, REV. 00
13	2/27/01	BCS	MRB	RCP	INCORP MMOD 98-641 DCN-00
12	4/23/99	DWS	BCS	GRM	INCORP DCR 980045 DCN*04
11	3/3/93	BCL	MRB	DJM	INCORP DCR 880179 CA*16
10	11/02/92	DWS	MRB	DJM	INCORP DCR 880179 CA*0
9	10/26/92	DWS	BCL	WFZ	INCORP. DCR 890091 CA*0, CHANGE SYS PREFIX ON CS-V52 TO WG-V52 PER WG-20773.
8	4/13/92	MRB	BCL	JEV	INCORP. MMOD 91-515 CA0
7	12/28/89	MRB	PAL	ES	INCORP. DCR 86-113 CA 1
6	6/30/88	GPM	APL	PAS	REVISED: VALVE SYMBOL V640, 638, 639, 725, 637, 724, 654, 641, 642, 651 & 652 PER FP 53072. ADDED: LINE SIZE & RESTRICTING ORIFICE AND FLANGES TO INLET HOTWELL CONDENSOR PER 53758. FLANGES TO CLARIFY LINE SIZE BOUNDARY FOR INLET TO E-139 FROM E65. FAI DESIGNATION FOR V750 AND V838 PER NHY DWG 506294 DELETED. FAI DESIGNATION FOR V625 AND V633 PER NHY DWG'S 506274 AND 506272. I.E. DESIGNATION FOR V635 PER UE&C DWG 805837.
5	12/15/87	GPM	DWS	PAS	REVISED: EQUIP. CL PER UE&C P&ID. REMOVED DUPLICATED PIPING. REV'D NOTE 6. DELETED FLEX HOSE & DESIGNATED VALVES AS CLOSED FOR CS-V907, 964, 965, 966, 975 & 972 PER NCR 86/145A. ADDED NOTE FOR CS-V907 & CAPILLARY SYMBOL.
4	1/23/87	JDM	WRD	RRC	INCORP DCR 618, REVISED VALVE TYPE PER FP.
3	10/16/86	JDM	WRD	RRC	INCORP NCR 95/116A & 99/113027A & ECA 19/105527C ADDED CON REFS NOTE 8, REMOVED DUPLICATED PIPING SHOWN ON NG PID, ADDED SYSTEM PREFIX TO CV-4, CV-3, CORRECTED VALVE TYPES PER UE&C P&ID
2	8/22/86	MPW	WRD	PHH	REVISED CONTINUATIONS
1	6/16/86	DWS	DWS	RRC	DESIGN CHG1 RESOLVED PER F-805037-R11 & 2 RESOLVED PER ECA 19/104696. REMOVED CS-SKD-93, DM-V285, DM-VENTV234 & DM DRN 10821 FROM DWG. ADDED BRS, AS, ASC CONT. INCORP ECA 05/1061028 & ECA 19/106828C.
0	1/22/86	DWS	JDM	WFD	ISSUED FOR OPERATION. ECA 19/104469A

REF. DRAWING NO.	REV	TITLE
9763-F-805037	11	CVCS LETDOWN DEGASIFIER P & ID

FPL ENERGY Seabrook Station

CHEMICAL & VOLUME CONTROL SYS.
LETDOWN DEGASIFIER
DETAIL

PID- 1-CS-B20724

04/04/08

P10- 1-BRS-B20853

INCOMPLETE ITEMS	
ITEM	NUMBER

WG SYSTEM 20768 — WG-1"
WLD SYSTEM 20216 — WLD-3"
WLD-4"
SI SYSTEM 20445 — SI-¾"
SI SYSTEM 20445 — SI- 1"
SS SYSTEM 20516 — SS-¾"
CS SYSTEM 20720 — CS - 3"
CS SYSTEM 20720 — CS-6"
CS SYSTEM 20720 — CS-1"
SI SYSTEM 20445 — SI-4"
SI-6"
V452
PRIMARY DRAIN TANK TK-68B
PRIMARY DRAIN TANK TK-68A
PRIMARY DRAIN TANK TRANSFER PUMP P-99A
PRIMARY DRAIN TANK TRANSFER PUMP P-99B
PRIMARY DRAIN TANK DEGASIFIER PREFILTER F-68
FCV 7931
PDT DEGAS REG HX E-69
PDT DEGAS PREHEATER E-68
PDT DEFGASIFIER RECIRC PUMP P-100A
PDT DEFASIFIER RECIRC PUMP P-100B
CV 1
11/2"
PRIMARY DRAIN TANK DEGASIFIER TK-67
PDT DEGAS TRIM COOLER E-70
V488
V487
V1
CESIUM REMOVAL ION EXCHANGER DM-13A
CESIUM REMOVAL ION EXCHANGER DM-13B
RADIATION MONITORING
RM-SKD-74
RECOVERY FILTER F-51A
RECOVERY FILTER F-51B
BORON WASTE STORAGE TANK TK-56A
BORON WASTE STORAGE TANK TK-56B
RECOVERY EVAP FEED PUMP P-86A
RECOVERY EVAP FEED PUMP P-86B
SF SYSTEM 20480
MATCH LINE BELOW LEFT
20854
20855
20856
20857
20858
20859
20860
20861
SEE C-10 FOR CONT.
SEE E-9 FOR CONT.
RECOVERY EVAPORATOR EV-3A
RECOVERY EVAPORATOR REBOILER E-54A
RECOVERY EVAPORATOR DISTILLATE CONDENSER E-55A
RECOVERY EVAPORATOR ACCUMULATOR TK-57A
RECOVERY EVAPORATOR DISTILLATE PUMP P-88A
RECOVERY EVAPORATOR DISTILLATE COOLER E-56A
RECOVERY EVAPORATOR BOTTOMS PUMP P-89A
RECOVERY BOTTOMS COOLER E-57A
LCV 2-A
LCV 17-A
V319
V89
V88
RECOVERY EVAPORATOR EV-3B
RECOVERY EVAPORATOR REBOILER E-54B
RECOVERY EVAPORATOR DISTILLATE CONDENSER E-55B
RECOVERY EVAPORATOR ACCUMULATOR TK-57B
RECOVERY EVAPORATOR DISTILLATE PUMP P-88B
RECOVERY EVAPORATOR DISTILLATE COOLER E-56B
RECOVERY EVAPORATOR BOTTOMS PUMP P-89B
RECOVERY BOTTOMS COOLER E-57B
LCV 2-B
LCV 17-B
RECOVERY TEST TANK TK-58A
RECOVERY TEST TANK TK-58B
RECOVERY TEST TANK PUMP P-98A
RECOVERY TEST TANK PUMP P-98B
RECOVERY DEMIN DM-14B
RECOVERY DEMIN DM-14A
RECOVERY DEMIN FILTER F-53B
RECOVERY DEMIN FILTER F-53A
RECOVERY EVAPORATOR BOTTOMS FILTER F-52B
RECOVERY EVAPORATOR BOTTOMS FILTER F-52A
WL SYSTEM 20828
RMW SYSTEM 20360
CS SYSTEM 20720
MATCH LINE ABOVE RIGHT

NOTES:
1. ALL LINES, EQUIPMENT, COMPONENTS AND INSTRUMENTS HAVE SYSTEM PREFIX "BRS" UNLESS NOTED OTHERWISE.
2. WORK THIS DWG WITH DWG'S 20854, 20855, 20856, 20857, 20858, 20859, 20860 & 20861
3. △ INDICATES REVISION LEVEL.

REF. DRAWING NO.	REV	TITLE
9763-F-805614	10	BORON RECOVERY SYSTEM FILTRATION & STORAGE
9763-F-805615	11	BORON RECOVERY SYSTEM EVAPORATOR EV-3A P&ID
9763-F-805616	9	BORON RECOVERY SYSTEM EVAPORATOR EV-3B P&ID
9763-F-805618	10	BORON RECOVERY SYSTEM PRIMARY DRAIN TANK
9763-F-805623	8	BORON RECOVERY SYSTEM EVAPORATOR BOTTOM
9763-F-805624	8	BORON RECOVERY SYS TESTING & DEMINERALIZATION
9763-F-805626	11	BORON RECOVERY SYSTEM-PRIMARY DRAIN TANKS P&ID

REV	DATE	DSGN	DRWN	CHKD	CE	LDE	DESCRIPTION
1	1/21/87	MPW	OPD	WRD	BCL	JWS	ADDED NOTE 3. REVISED PER LATEST SYSTEM DRAWINGS
0	2/13/86	GD	SKN	JDM	ASK	WFD	ISSUED FOR OPERATIONS

PSNH — PUBLIC SERVICE OF NEW HAMPSHIRE

SEABROOK STATION

BORON RECOVERY SYSTEM OVERVIEW

PID- 1-BRS-B20853

NHY PID:20856.DGN:1

PID- 1-BRS-B20856

FOR P&ID REFERENCE DRAWINGS, SYMBOLS AND ABBREVIATIONS
REFER TO DRAWINGS P&ID - LEGEND 1 AND P&ID - LEGEND 2

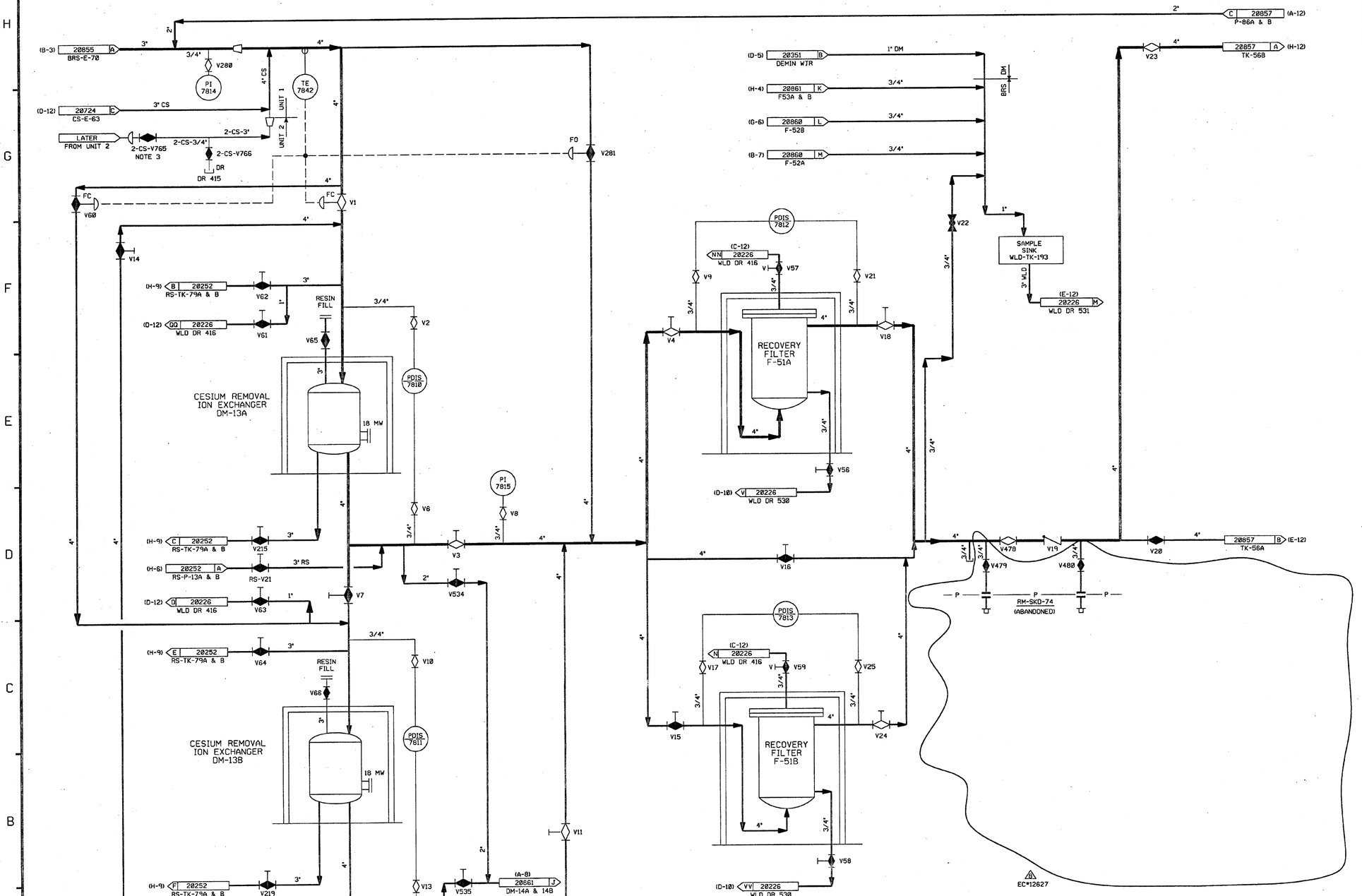

NOTES:

1. ALL LINES, EQUIPMENT, COMPONENTS AND INSTRUMENTS HAVE SYSTEM PREFIX "BRS" UNLESS NOTED OTHERWISE.
2. WORK THIS DWG WITH DWG'S 20853, 20854, 20855, 20857, 20858, 20859, 20860 & 20861
3. VALVE IS CLOSED DURING UNIT 2 CONSTRUCTION
4. △ INDICATES REVISION LEVEL
5. ALL LINES, EQUIPMENT, COMPONENTS AND INSTR. ARE SAFETY CLASS NNS UNLESS NOTED OTHERWISE.
6. DELETED. △8 EC*12627

REV	DATE	DSGN	CHKD	CE	DESCRIPTION
8	3/17/09	JM	BES	DJM	INCORP. EC*12627
7	10/8/91	MRB	JM	ES	INCORP. MMOD 91-625 CA0
6	9/18/91	GPM	JM	MAC	INCORP. DCR 90-14 CA01
5	2/28/91	MRB	RMC	BCL	INCORP. MMOD 90-648 CA01
4	10/29/90	MRB	JM	BCL	INCORP MMOD 90-601 CA00 ADDED: NOTE 5 FOR INFORMATION
3	12/12/86	MPW	PAL	RRC	ADDED CONT REF LOC'S, VALVE RM V8122 PER FP-71282 AND NOTE 4.
2	9/26/86	MAP	JDM	RRC	ADDED VALVING & INSTRUMENT INFO FOR RM-SKD-74 PER FP-71200. REVISED DWG CONTINUATION. DELETED REF DWGS N/A.
1	6/23/86	GD	DWS	RRC	INCORP. ECA 19/110012A & 99/886008, CHANGE ITEM #1 RESOLVED PER ECA 19/802819A
0	1/13/86	GD	JDM	WFD	ISSUED FOR OPERATIONS

REF. DRAWING NO.	REV	TITLE
9763-F-805614	10	BORON RECOVERY SYS FILTR & STOR P&ID

FPL ENERGY Seabrook Station

BORON RECOVERY SYSTEM
FILTRATION
DETAIL

PID- 1-BRS-B20856

03/10/09

PID- 1-BRS-B20857

FOR P&ID REFERENCE DRAWINGS, SYMBOLS AND ABBREVIATIONS REFER TO DRAWINGS P&ID - LEGEND 1 AND P&ID - LEGEND 2

NOTES:
1. ALL LINES, EQUIPMENT, COMPONENTS AND INSTRUMENTS HAVE SYSTEM PREFIX "BRS" UNLESS NOTED OTHERWISE.
2. WORK THIS DWG WITH DWG'S 28853, 28854, 28855, 28856, 28858, 28859, 28860 & 28861.
3. SEE DRAWING DM-28353 FOR WATER SUPPLY TO PUMP DOUBLE MECHANICAL SEALS.
4. INSTRUMENT REFERENCES:
   (A) TO TV-9287 ON DWG AS-28574 (D-11)
   (B) TO TV-9288 ON DWG AS-28574 (E-18)
5. VALVE IS CLOSED DURING UNIT 2 CONSTRUCTION
6. △ INDICATES REVISION LEVEL.
7. REFER TO DRAWING VSL-20774 FOR VALVE LEAKOFFS.
8. ALL LINES, EQUIPMENT, COMPONENTS AND INSTRUMENTS ARE SAFETY CLASS NNS, UNLESS NOTED OTHERWISE.

REV	DATE	DSGN	CHKD	CE	DESCRIPTION
6	6/13/06	BCS	JMA	DJM	INCORP. MMOD 05-524 DCN-88, 83
5	11/7/92	MRB	BCL	DJM	INCORP. DCR 87-84 CAB REVISED: NOTE 4, VALVE SYMBOL PER NOTE 5, ADDED: FLOW ARROWS, NOTE 8, DWG LOC COORDS. DELETED: NNS-1 SYMBOL.
4	5/28/92	MRB	MPW	DWS	INCORP. MMOD 91-511 CAB
3	6/18/87	GPM	BCL	VWS	REVISED: TO CLARIFY DUPLICATION OF ASSOC. SYS. REF LETTER FOR CONT. DWG'S; ADDED: NOTE 7; CONT. COORD'S DELETED: REF DWG'S.
2	9/12/86	MPW	BCL	RRC	ADDED CONTINUATIONS & REV LOCATION OF PT-7816, 7817, LT-7863, 7864, 7866 & 7867 PER ERECTION ISO'S 7414 WALKDOWN
1	6/17/86	GD	JMCS	RRC	RESOLVED CHG ITEMS 1 & 2 PER REF DWG 885614-REV 10, INCORP. ECA 19/35898 & ECA 19/1182-48, REV VALVE TAG
0	1/13/86	GD	ASK	WFD	ISSUED FOR OPERATIONS

REF. DRAWING NO.	REV	TITLE
9763-F-885614	10	BORON RECOVERY SYS-FLTRA & STORG P&ID

FPL ENERGY Seabrook Station

BORON RECOVERY SYSTEM
STORAGE
DETAIL

PID- 1-BRS-B20857

06/13/06

PID- 1-BRS-B20858

FOR P&ID REFERENCE DRAWINGS, SYMBOLS AND ABBREVIATIONS REFER TO DRAWINGS P&ID-LEGEND 1 AND P&ID-LEGEND 2.

NOTES:

1) ALL LINES, EQUIPMENT, COMPONENTS AND INSTRUMENTS HAVE SYSTEM PREFIX "BRS" UNLESS NOTED OTHERWISE.
2) WORK THIS DWG WITH DWG'S 20853, 20854, 20855, 20856, 20857, 20859, 20860 & 20861.
3) SEE DWG DM-20353 FOR WATER SUPPLY TO PUMP DOUBLE MECHANICAL SEALS.
4) ENTIRE LINE IS FLEX CONN.
5) INSTRUMENT REFERENCES:
   - (A) HIGH E-57A OUTLET TEMP, HIGH WS-TK-76 LEVEL AND LOW EV-3B LEVEL WS-TK-76 TRANSFER VALVE INTERLOCK.
   - (B) BRS-P-89A, DISTILLATE FLUSH V316 INTERLOCK.
   - (F) TO 1-DM-V88 ON DWG DM-20351 (H-7) & 1-BRS-FCV-1A ON DWG AS-20572 (D-6).
   - (G) TO 1-DM-V88 ON DWG DM-20351 (H-7) & 1-BRS-FCV-1A ON DWG AS-20572 (D-6).
6) △ INDICATES REVISION LEVEL
7) ALL LINES, EQUIPMENT COMPONENTS AND INSTRUMENTS ARE SAFETY CLASS NNS UNLESS NOTED OTHERWISE.

REV	DATE	DSGN	CHKD	CE	DESCRIPTION
7	6/13/06	BCS	JMJ	DJM	INCORP MMOD 85-524 DCN-83
6	12/7/92	MRB	DWS	DJM	INCORP DCR 87-84 CA 28
5	11/7/92	MRB	BCL	DJM	INCORP DCR 87-84 CA8
4	12/18/91	MRB	JM	GRM	INCORP: DCR 86-634 CA8 REVISED: VALVE POSITION PER NHY PID DM-20351 ADDED: LINE SIZE FOR CLARITY DELETED: REDUNDANT INTERFACE INFO. & VALVE DIAPHRAGM SYMBOL PER UE&C PID 9763-F-805615
3	9/16/87	JDM	BCL	RRC	INCORP DCR 86-597, CORRECTED DRAFTING ERRORS. REVISED NOTE 7.
2	10/3/86	MRJ	BCL	RRC	RE-INCORP. ECA 86/116967A, ADDED V8800 CONTINUATION FLAG REF'S & NOTE 6. REVISED TUBING SYMBOL FOR PT-7982 PER UE&C P&ID AND CONTINUATION FLAG REF. ADDED P&ID LEGEND NOTE.
1	6/24/86	JDM	JNK	RRC	INCORP. ECA 86/116967A & 19/116983C ADDED REDUCER & FLAGS. CHANGE ITEM ◇ RESOLVED PER LATEST UE&C P&ID
0	1/13/86	GD	JDM	WFD	ISSUED FOR OPERATIONS

REF. DRAWING NO.	REV	TITLE
9763-F-805615	13	BORON RECOVERY SYS-EVAPOR EV-3A P&ID

FPL ENERGY Seabrook Station

BORON RECOVERY SYSTEM
EVAPORATION
DETAIL

PID- 1-BRS-B20858

06/12/06

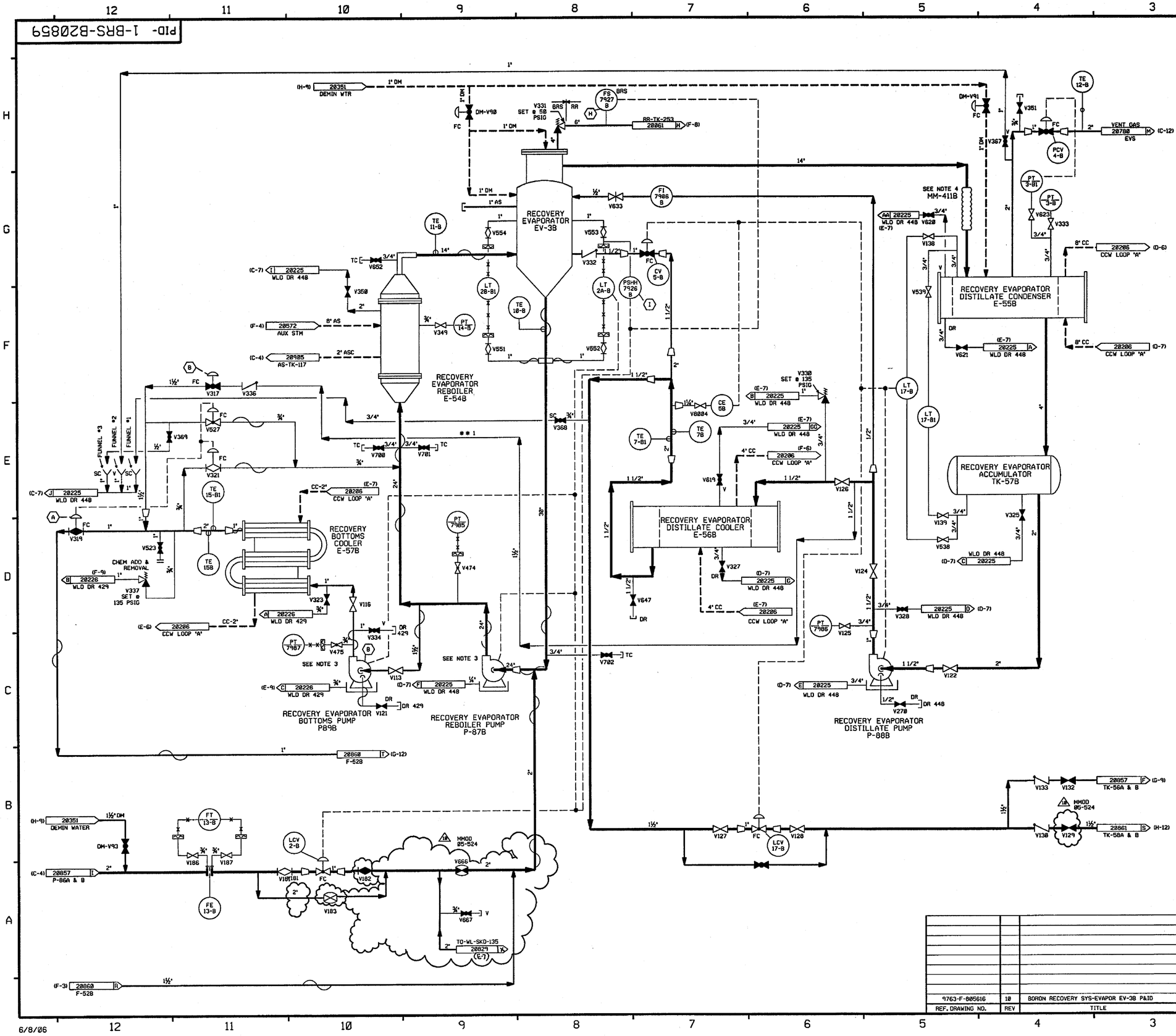

FOR P&ID REFERENCE DRAWINGS, SYMBOLS AND ABBREVIATIONS REFER TO DRAWINGS P&ID - LEGEND 1 AND P&ID - LEGEND 2

NOTES:

1) ALL LINES, EQUIPMENT, COMPONENTS AND INSTRUMENTS HAVE SYSTEM PREFIX "BRS" UNLESS NOTED OTHERWISE.
2) WORK THIS DWG WITH DWG'S 20853, 20854, 20855, 20856, 20857, 20858, 20860 & 20861.
3) SEE DWG DM-20353 FOR WATER SUPPLY TO PUMP DOUBLE MECHANICAL SEALS.
4) ENTIRE LINE IS FLEX CONN.
5) INSTRUMENT REFERENCES:
   - (A) HIGH E-57B OUTLET TEMP, HIGH WS-TK-76 LEVEL AND LOW EV-3B LEVEL WS-TK-76 TRANSFER VALVE INTERLOCK.
   - (B) BRS-P-89B, DISTILLATE FLUSH V317 INTERLOCK.
   - (H) TO 1-DM-V90 ON DWG DM-20351 (H-9) & 1-BRS-FCV-1B ON DWG AS-20572 (G-6).
   - (I) TO 1-DM-V90 ON DWG DM-20351 (H-9) & 1-BRS-FCV-1B ON DWG AS-20572 (G-6).
6) △ INDICATES REVISION LEVEL
7) DELETED
8) ALL LINES, EQUIPMENT, COMPONENTS AND INSTRUMENTS ARE SAFETY CLASS NNS, UNLESS NOTED OTHERWISE.

REV	DATE	DSGN	CHKD	CE	DESCRIPTION
10	6/13/06	BCS	JM	DJM	INCORP. MMOD 05-524 DCN 00, 03
9	8/18/97	MPW	BCS	VWS	INCORP. MMOD 96-550 DCN 01
8	12/7/92	MRB	DWS	DJM	INCORP. DCR 87-84 CA 28
7	11/7/92	MRB	BCL	DJM	INCORP. DCR 87-84 CA0
6	12/18/91	MRB	JM	GRM	INCORP. DCR 86-634 CA0
5	5/25/88	GPM	APL	DJM	INCORP. DCR 88-003 REVISED: PIPING TO CLARIFY DUPLICATION OF ASSOCIATED SYSTEMS. NOTE 8. ADDED: HEAT TRACE SYMBOL PER LINE LIST. LINE SIZE PER UE & C ISO F-411852 DELETED: CHANGE ITEM 1 PER DCR 88-003.
4	9/16/87	JDM	BCL	RRC	INCORP DCR 86-587, ADDED V-8004 PER EXISTING FIELD CONFIG. DELETED NOTE 7, CORRECTED DRAFTING ERRORS, REVISED TO CLARIFY DUPLICATION OF ASSOCIATED SYSTEMS. ADDED: NOTE 8 PER 805616, CHG. ITEM 1
3	2/18/87	JDM	WRD	VWS	APPROVED CHANGE ITEM #1 PER COMPLETION OF WR#86W010018.
2	12/22/86	FJR	WRD	RRC	INCORP. ECA 19/802818A. ADDED & REV'D CONT. FLAG COORD'S. CORRECTED DRAFTING ERRORS PER UE&C P&ID. REV. REF. DWG. LIST. ADDED & REV. CONT. FLAG REF. DWGS. ADDED NOTES 6 & 7.
1	6/26/86	GD	BCL	RRC	INCORP. ECA 19/116080A, ECA 08/802817C & ECA 19/114273A. CHANGE ITEM 1 RESOLVED PER LATEST UE&C P&ID. CHANGE ITEM 2 RESOLVED PER ECA 19/801285A.
0	1/13/86	GD	JDM	WFD	ISSUED FOR OPERATIONS

REF. DRAWING NO.	REV	TITLE
9763-F-805616	10	BORON RECOVERY SYS-EVAPOR EV-3B P&ID

FPL ENERGY Seabrook Station

BORON RECOVERY SYSTEM EVAPORATION DETAIL

PID- 1-BRS-B20859

6/8/06

P10- 1-BRS-B20860

FOR P&ID REFERENCE DRAWINGS, SYMBOLS AND ABBREVIATIONS REFER TO DRAWINGS P&ID LEGEND 1 & LEGEND 2.

INCOMPLETE ITEMS

ITEM	NUMBER

RECOVERY EVAPORATOR BOTTOMS FILTER F-52B

RECOVERY EVAPORATOR BOTTOMS FILTER F-52A

NOTES:

1) ALL LINES, EQUIPMENT, COMPONENTS AND INSTRUMENTS HAVE SYSTEM PREFIX "BRS" UNLESS NOTED OTHERWISE.
2) WORK THIS DWG WITH DWG'S 20853, 20854, 20855, 20856, 20857, 20858, 20859 & 20861.
3) VALVE AND EQUIPMENT NUMBERS PRECEDE BY A "2" ARE FOR UNIT 2.
4) INSTRUMENT SYMBOLS:
   (A) INTERLOCK WITH EVAPORATOR CONCENTRATES DISCHARGE VALVES.
5) △ INDICATES REVISION NUMBER △

REV	DATE	DSGN	DRWN	CHKD	CE	LDE	DESCRIPTION
							ADDED DWG COOR FO ALL CONT FLAGS, CS-TK-4A TO CONT FLAG FOR DWG 20729, 3 LETTER IDENTIFIERS FOR CONT FLAGS, NOTE 5 & SYMBOLS & ABBREV
2	4/26/86	CSB	DWS		BCL	RRC	REF DWGS NOTE, DELETED 7 REF DWGS & PIPE CLASSES, REVISED IDENT LETTERS FROM P TO PF & X TO XX FOR FILTER F-52B & CONT DWG FROM 20732 TO 20735.
1	6/17/86	GD	GJS	BCL	JMCS	RRC	INCORP ECA 19/1159644
0	1/13/86	GD	SKN	JDM	ASK	WFD	ISSUED FOR OPERATIONS

REF. DRAWING NO.	REV	TITLE
9763-F-805623	7	BORON RECOVERY SYSTEM-EVAPORATOR BOTTOMS-P & ID DIAGRAM

PSNH PUBLIC SERVICE OF NEW HAMPSHIRE

SEABROOK STATION

BORON RECOVERY SYSTEM EVAPORATION DETAIL

PID- 1-BRS-B20860

04/26/85

PID- 1-BRS-B20861

NHY PID20861.DGN

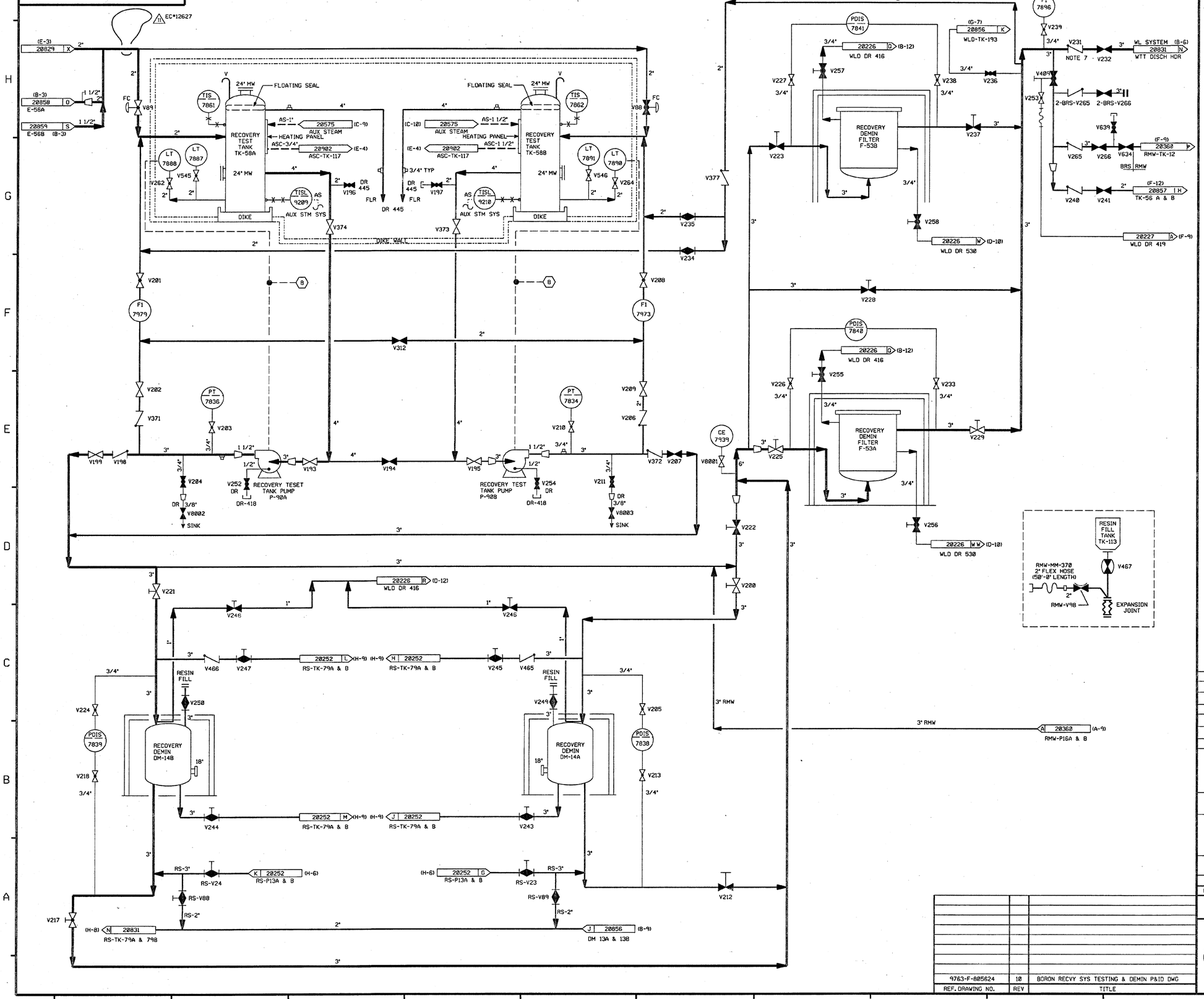

FOR P&ID REFERENCE DRAWINGS, SYMBOLS AND ABBREVIATIONS REFER TO DRAWINGS P&ID - LEGEND 1 AND P&ID - LEGEND 2

NOTES:

1. ALL LINES EQUIPMENT, COMPONENTS AND INSTRUMENTS HAVE SYSTEM PREFIX "BRS" UNLESS OTHERWISE NOTED.
2. WORK THIS DWG WITH DWGS 20853,20854, 20855, 20856, 20857, 20858, 20859 & 20860.
3. VALVE & EQUIPMENT NUMBERS PRECEDED BY A "2" ARE FOR UNIT 2.
4. △ INDICATES REVISION LEVEL
5. ALL LINES, EQUIPMENT, COMPONENTS AND INSTRUMENTS ARE SAFETY CLASS NNS UNLESS OTHERWISE NOTED.
6. INSTRUMENT REFERENCES
   (B) TO WL-FCV-1458-1 & 2, DRAWING WL-20831
7. INTERNALS OF CHECK VALVE BRS-V231 HAVE BEEN REMOVED.

REV	DATE	DSGN	CHKD	CE	DESCRIPTION
11	3/17/09	JM	BCS	DJM	INCORPORATED EC*12627
10	6/13/06	BCS	JM	DJM	INCORP. MMOD 05-524 DCN-00, 02
9	9/25/03	BCS	JM	JET	INCORPORATED MSE 03-133 REV. 00
8	11/17/98	BCS	MPW	JCM	INCORPORATED DCR 98-029 DCN-01
7	10/21/98	BCS	DWS	DJM	INCORPORATED DCR 98-029 DCN-00
6	7/24/94	BCL	MPW	VWS	INCORPORATED MMOD 95-506 CA-0
5	3/28/89	MRB	PAL	MJY	INCORPORATED DCR 86-185 CA 3
4	5/25/88	GPM	APL	DJM	INCORP DCR 88-003 REVISED: INLETS TO DM-14A & B PER UE & C ISO. V8002, 3 SYMBOL PER AS BUILT CONDITION. PIPING TO CLARIFY ASSOCIATED SYSTEMS ADDED: NOTE 5 PER UE & C P & ID 805624. DWG CONT LETTERS.
3	1/7/87	MRJ	WRD	RRC	RESOLVED CHANGE ITEM 1 PER AS-BUILT COND., CORRECTED INCORP. OF ECA 19/1159648, DELETED NOTE 5.
2	10/17/86	CSB	MAP	RRC	INCORP ECA'S 99/117127A & 19/1159648. ADDED DWG DOOR ID CONT FLAGS. DIKE WALL BOUNDARY. REF DWG NOTE & NOTE FOR DWG REV LEVEL. CHANGED V277 TO V227. REVISED P-90A & B DISCH HDR DRAIN VALVE & PIPING FOR DEMIN TKS DM-TK-14A & B.
1	6/18/86	DWS	DWS	RRC	CORRECTED V194 TO GATE, REVISED CONTINUATION, RESOLVED CHNG. ITEM NO.1 INC. 805624 REV. 10
0	1/13/86	GD	JDM	WFD	INCORPORATE ECA 00/188833 ISSUED FOR OPERATIONS

REF. DRAWING NO.	REV	TITLE
9763-F-805624	10	BORON RECVY SYS TESTING & DEMIN P&ID DWG

FPL ENERGY Seabrook Station

BORON RECOVERY SYSTEM TESTING & DEMINERALIZATION DETAIL

PID- 1-BRS-B20861

03/09/09

NHY PID.20854.DGN1

FOR P&ID REFERENCES DRAWINGS, SYMBOLS AND ABBREVIATIONS REFER TO DRAWINGS P&ID - LEGEND 1 AND P&ID - LEGEND 2.

PRIMARY AUXILARY BUILDING | WASTE PROCESSING BUILDING

WG 1" from (E-3) A 20771 WG-P-263

(G-10) 20222 A WLD-E-43 — WLD 3"

(H-3) 20450 B SI-TK-9A,B,C & D — SI 3/4"

SI-V170 — SI 1"

(E-3) 20519 C SS-E-12A & B,13A & B — SS 3/4"

(F-12) LCV-112 20724 A CS-F-2 — CS 3"

WLD 4"

WLD 3/4" — WLD-V179 — DR — DR 415

PAB UNIT 2

2-WLD-4" — NOTE 4 — 2-WLD-V170 — CAPPED TO ISOLATE UNIT 1

2-WLD-3/4" — 2-WLD-V176 — DR — DR 415

(G-4) 20725 A CS-V243 — CS 6"

CS-V769 — CS 3/4"

CS-V843 — CS 3/4" — DR — DR 415

CAPPED TO ISOLATE UNIT 1

2-CS-6" — NOTE 4 — 2-CS-V775

V455 SET @ 135 PSIG — (H-4) 20227 K WLD DR 438

V456 SET @ 135 PSIG — (G-4) L 20227 WLD DR 438

(A-7)/(A-6) CS 20725 / SI 20447 — CS 1"

(A-6) 20446 A RV HEADER — SI 6" / SI 4"

PAB WPB

V450

V449 — 3/4" PLUG

V451

PT 7923

PT 7922

(F-8) 20351 B DEMIN WATER — DM 1 1/2"

V457 SET @ 15 PSIG — 20227 J WLD DR 426 (H-4)

V458 SET @ 15 PSIG — (H-4) I 20227 WLD DR 426

(G-10) E 20522 SS-CP-521 UNIT 2 — 1/2" T

(G-12) N 20780 H_2 VENT HDR — 2-BRS-2"

(E-12) F 20135 NG SYS — 1/2" T

(G-5) 20522 F SS-CP-521 — 1/2" T

(H-7) F 20227 WLD DR 427 — 2-BRS-1"

(E-12) 20135 D NG SYS. — 1"

SS BRS — MSE-07-149 — LO — 2-BRS-V551

2-BRS-3/4" — 2-BRS-V550 — 2-BRS-V505 LO

2-BRS-V453

V657 — V656

SS-CP-521 20522 D (G-11)

3/4" V660 C — H_2 VENT HDR 20780 J (E-12)

2" — BRS SS — V504 LO — 1/2" T — NG SYS 20135 E (E-12)

V661 LO — MSE-07-149 — SS-CP-521 20522 C (G-7)

1" — V454 — WLD DR 427 20227 E (H-7)

1" — NG SYS 20135 C (E-10)

AT 7972 — H_2

PDIS 7930 — (B-12) 20226 S WLD DR 416

V438 — V440 — V439

3/4" — 3" — 3/4" — V442

3/4" — V441 — 20226 U WLD DR 530 (C-10)

PRIMARY DRAIN TANK DEGASIFIER PREFILTER F-60

V615 — 20724 B CS-TK-64 (H-12)

V444 — 20855 A TK-67 (G-12)

V433 — V434 — 1 1/2"

FQ 7963 — FQ 7964

PRIMARY DRAIN TANK TK-66B — PRIMARY DRAIN TANK TK-66A — 18" MW

LT 7947 — LT 7943 — TE 7962 — TE 7961 — LT 7942 — LT 7946

V445 — V549 — V550 — V446 — V447 — V547 — V548 — V448 — 2"

V430 — 1 1/2"

V429 — V428 — V432 — V431 — 3"

(G-7) G 20227 WLD DR 427 — V418 — 2"

(G-7) H 20227 WLD DR 427 — V419 — 2"

V421 — V422 — V495 — FC — FCV 7931 — V496 — 3"

V497 — 3"

V631 — DR — DR 427 — 3/4"

V501 — DR — DR 415 — 3/4"

V437 — V443 — 3"

FE 7931 — FT 7931 — V435 — V436 — 1/2"

V423 — V424 — 1 1/2"

J D E

BRS SS — V420 — SS-CP-521 20522 B (F-6) — SS-CP-521 (F-8) A 20522 — V427 — 3/4"

PT 7933 — PT 7932

(D-12) 20135 B NITROGEN NG-SKD-30 — NG 1"

V413 — V463 — 3/4"

V416 — NG 1" — (D-12) A 20135 NITROGEN NG-SKD-30

SEE NOTE 3 — V414 — 3" 1 1/2" — 1"

SEE NOTE 3 — V417 — 1 1/2" 3" — 1"

(H-7) C 20227 WLD DR-427 — V464 — (H-7) B 20227 WLD DR-427

(H-7) D 20227 WLD DR 427 — V425 — (H-7) A 20227 WLD DR 427

V415 — 3"

PRIMARY DRAIN TANK TRANSFER PUMP P-99B

PRIMARY DRAIN TANK TRANSFER PUMP P-99A

NOTES:

1. ALL LINES, EQUIPMENT, COMPONENTS AND INSTRUMENTS HAVE SYSTEM PREFIX "BRS" UNLESS NOTED OTHERWISE.
2. WORK THIS DWG WITH DWG'S 20853, 20855, 20856, 20857, 20858, 20859, 20860 & 20861.
3. SEE DRAWING DM-20353 FOR WATER SUPPLY TO PUMP DOUBLE MECHANICAL SEALS.
4. VALVE IS CLOSED DURING UNIT 2 CONSTRUCTION.
5. △ INDICATES REVISION LEVEL
6. ALL LINES, EQUIPMENT, COMPONENTS AND INSTRUMENTS ARE SAFETY CLASS NNS, UNLESS NOTED OTHERWISE.
7. INSTRUMENT REFERENCES:
   - (D) FROM 1-BRS-FS-7925 ON DWG BRS-20855 (F-7)
   - (E) FROM 1-BRS-PSHH-7924 ON DWG BRS-20855 (F-7)
   - (J) FROM 1-BRS-PSH-3-1 ON DWG BRS-20855 (F-5)

REV	DATE	DSGN	CHKD	CE	DESCRIPTION
9	9-7-07	JM	BCS	RFB	INCORP MSE 07-149 REV. 0
8	5/30/00	BCS	DWS	WFZ	INCORP MSE 00-124 REV. 0
7	6/6/99	DWS	RWS	DJM	INCORP MMOD 970618 DCN#00
6	11/7/92	DWS	BCL	DJM	INCORP DCR 870084 CA#0 & 5
5	4-23-92	MRB	MPW	JEV	REMOVED REF. TO UNIT 2 (LATER) INCORP MMOD'S 91-511 CA0 & 91-515 CA0
4	5/26/89	MRB	PAL	IW	INCORP. DCR 87-110 CA 11 REVISED: CONT. COORD. ADDED: NOTE 6
3	1/6/88	MPW	DWS	MJY	INCORP.: DCR 87-314 & ECA 19/101717A UNIT 2 VALVES SHOWN CLOSED PER NOTE 4. REVISED: FLOW ON BYPASS LINE, CONT. COORDINATES ADDED: FLOW ARROW TO TK-66A.
2	10/3/86	CSB	BCL	RRC	REV'D WG 1" LINE (FROM WG-P-263) TO AGREE WITH P&ID 20222 & REV'D CONT FLAG (20771). ADDED PAB/WPB BOUNDARY, CONT FLAG IDENT LETTER "C" (20519) & "A" (20855). ADDED ECV-112A" TO CONT FLAG (20724). ADDED NOTE 5.
1	6/19/86	JDM	DWS	RRC	REMOVED CHANGE ITEMS 1 & 2, INCORP. ECA'S 19/2489B, 19/116021A, 19/116172A, AND 805626 REV. 11
0	1/13/86	GD	JDM	WFD	ISSUED FOR OPERATIONS

REF. DRAWING NO.	REV	TITLE
9763-F-805626	11	BORON RECOVERY SYS PRI DRAIN TKS P&ID

FPL ENERGY Seabrook Station

BORON RECOVERY SYSTEM
DEGASIFICATION
DETAIL

PID- 1-BRS-B20854

9/17/07

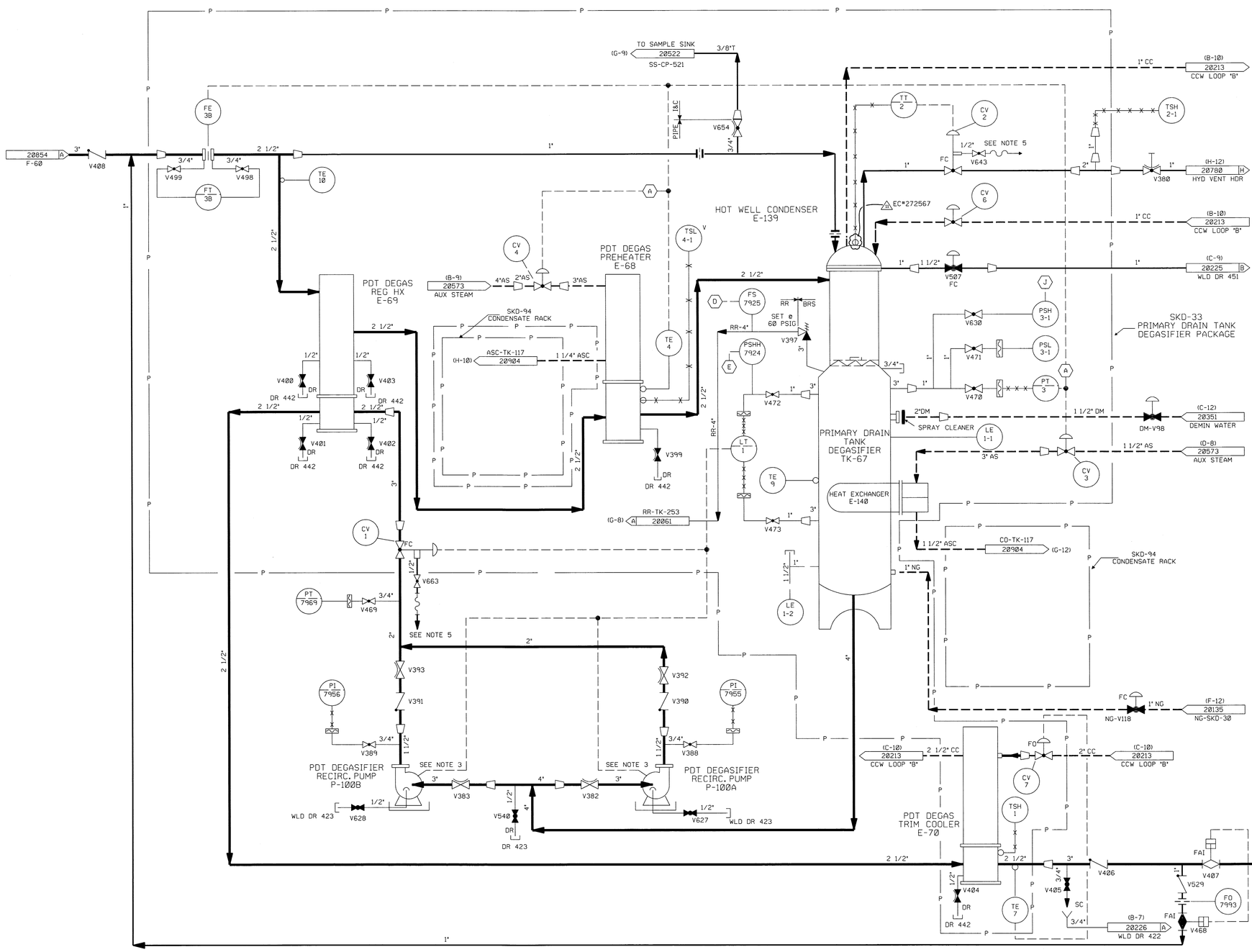

FOR P&ID REFERENCE DRAWINGS, SYMBOLS AND ABBREVIATIONS REFER TO DRAWINGS P&ID - LEGEND 1 AND P&ID - LEGEND 2

NOTES:

1. ALL LINES, EQUIPMENT, COMPONENTS AND INSTRUMENTS HAVE SYSTEM PREFIX "BRS" UNLESS NOTED OTHERWISE.
2. WORK THIS DWG WITH DWG'S 20853, 20854, 20856, 20857, 20858, 20859, 20869 & 20861
3. SEE DWG DM-20354 FOR WATER SUPPLY TO PUMP DOUBLE MECHANICAL SEALS.
4. △ INDICATES REVISION LEVEL
5. REFER TO DRAWING VSL-20774 FOR VALVE LEAKOFF.
6. ALL LINES, EQUIPMENT, COMPONENTS AND INSTRUMENTS ARE SAFETY CLASS NNS UNLESS NOTED OTHERWISE.
7. INSTRUMENT REFERENCES:
   - (A) TO 1-BRS-CV-3 & 4 ON DWG AS-20573 (D-10).
   - (D)(E)(J) TO 1-AS-CV-3, 1-AS-CV-4 ON DWG AS-20573 (D-9). TO 1-BRS-P-99A & B ON DWG BRS-20854 (C-8) (C-10). TO 1-DM-V98 ON DWG DM-20351 (C-12)

REV	DATE	DSGN	CHKD	CE	DESCRIPTION
11	6/1/11	JM	BCS	JWB	INCORP. EC*272567
10	12/8/04	BCS	JM	RRB	INCORP CR 04-09401 REV. 00
9	8/30/00	BCS	MPW	RCP	INCORP MMOD 98-641 DCN-00
8	12/7/92	MRB	DWS	DJM	INCORP DCR 87-84 CA 28
7	11/7/92	MRB	BCL	DJM	INCORP. DCR 87-84 CA*0, 5 & 25 ADDED: NOTE 14 & INSTR. REFERENCE REMOVED FLANGES FROM B P&ID
6	12/20/89	MRB	PAL	ES	INCORP. DCR 86-113 CA01.
5	5/25/88	GPM	APL	DJM	INCORP. DCR 88-003 REVISED: V382, 383, 393, 397, 399, 400, 401, 402, 403, & 404 VALVE SYMBOL PER FP 53578. ADDED: RESTRICTING ORIFICE SYMBOL TO INLET E-139 PER FP 53758, NOTE 6 PER UE & C P & ID 805618.
4	8/14/87	GPM	MPW	RRC	INCORP. ECA 19/107980 REV'D. TO CLARIFY DUPLICATION OF ASSOC SYSTEM & NOTE 3. ADDED: NOTE 5, CONT COOR'D, LINE SIZE & FLG'S
3	1/23/87	JDM	WRD	RRC	INCORP. DCR-618
2	9/26/86	MPW	MAP	RRC	REMOVED NONAPPLICABLE REF DWGS. INCORP NCR 95/116A, ECA 19/117127A SYSTEM CHANGED TO BRS ON VALVES CV-3, CV-4, CV-6 & CV-7 ; WAS AS AND CC IN ERROR, ADDED CONTINUATIONS.
1	6/16/86	DWS	JDM	RRC	INCORP'D ECA 99/114788A
0	1/13/86	GD	JDM	WFD	ISSUED FOR OPERATIONS

REF. DRAWING NO.	REV	TITLE
9763-F-805618	10	BORON RECOV SYS-PRIM DRAIN TK DEGAS P&ID

NEXTera ENERGY SEABROOK

SEABROOK STATION

BORON RECOVERY SYSTEM DEGASIFICATION DETAIL

PID- 1-BRS-B20855

5/31/11

NHY P10:20855.DGN:1

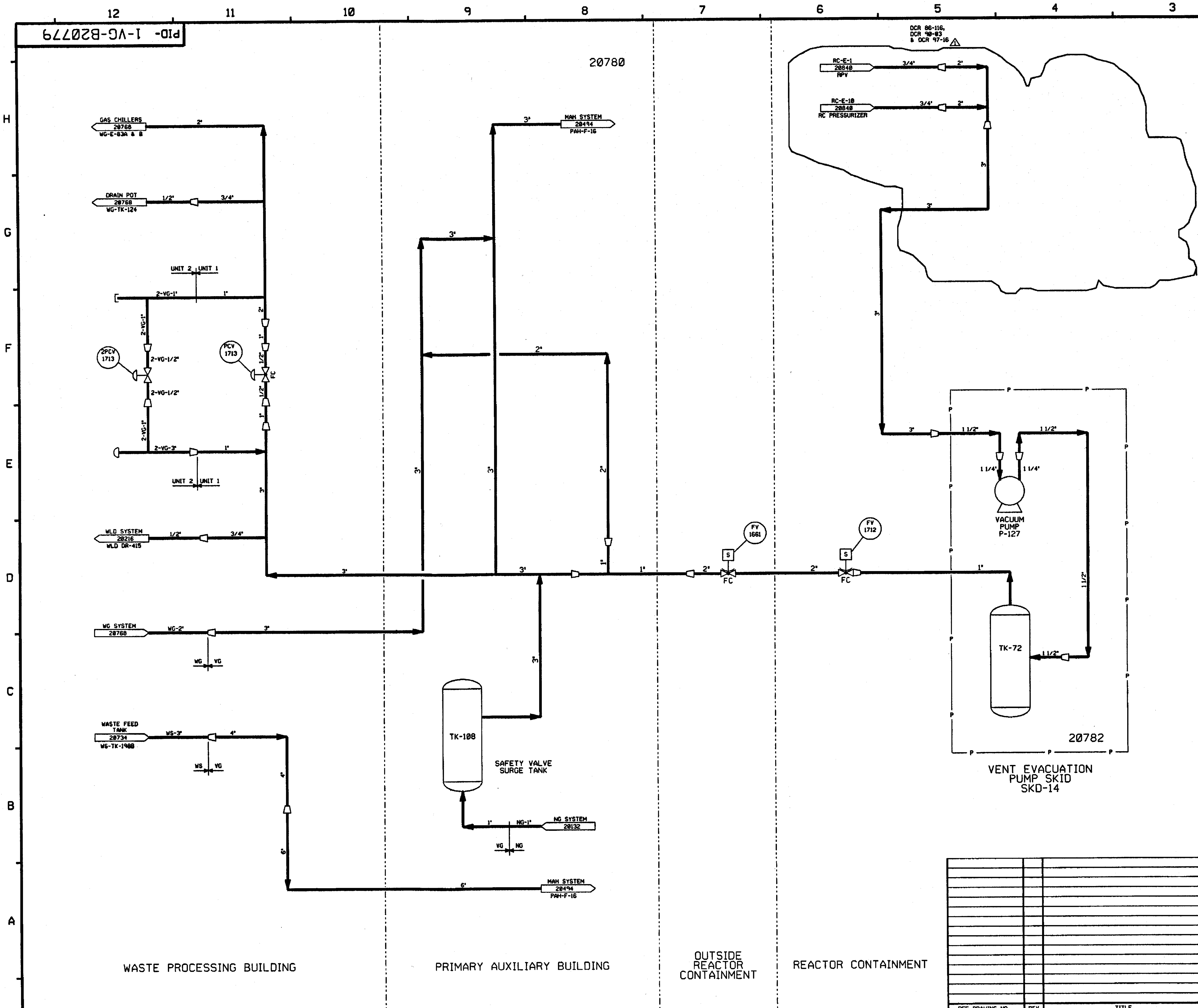

FOR P&ID REFERENCE DRAWINGS, SYMBOLS AND ABBREVIATIONS REFER TO DRAWINGS P&ID - LEGEND 1 AND P&ID - LEGEND 2

NOTES:

1. WORK THIS DRAWING WITH DRAWINGS 20780 & 20782.
2. ALL LINES, EQUIPMENT, COMPONENTS AND INSTRUMENTS HAVE SYSTEM PREFIX 'NG' UNLESS NOTED OTHERWISE.
3. △ -INDICATES REVISION LEVEL.

REV	DATE	DSGN	DRWN	CHKD	CDE	SES	DESCRIPTION
1	12/10/97	MPW	—	DWS	BES	EM	INCORP. DCR 86-116 CA 0, DCR 90-03 CA 0 & DCR 97-16 DCN 00 & 04
0	2/3/87	MPW	TAK	PAL	BCL	VWS	ISSUED FOR OPERATIONS

North Atlantic Energy Service Corporation

SEABROOK STATION

VENT GAS SYSTEM OVERVIEW

PID- 1-VG-B20779

PID- 1-VG-B20780

WASTE PROCESSING BUILDING | PRIMARY AUXILIARY BUILDING | OUTSIDE REACTOR CONTAINMENT | INSIDE REACTOR CONTAINMENT

GAS CHILLERS WG-E-63A & B 28778
DRAIN PDT WG-TK-124 28771
PDT DEGAS BRS-TK-67 28855
DRAIN PDT WG-TK-124 28771
2-SS-MM-1516 UNIT 2
CAPPED TO ISOLATE UNIT 1 FROM UNIT 2.
PIC 1713
PCV 1713
H2 COMP (WG) 28773 UNIT 2
VENT THRU ROOF TO ATMOSPHERE
BRS-TK-66B 28854 UNIT 2
2-VG-TK-188 UNIT 2
CAPPED TO ISOLATE UNIT 1 FROM UNIT 2.
SET @ 15 PSIG.
SET @ 2 PSIG.
SET PRESS. @ 15 PSIG.
1-LG 1734
1-LG 1733
1-LG 1735
H2 COMP-WG 28773
PDT BRS-TK-66A 28854
RGWS-WG 28773
2-PAH-F-18 LATER UNIT 2
WLD DRAIN 546
RESIN CENT. WS-MM-611 28735
SR HOPPER WS-TK-81 28735
BWST BRS-TK-56A & B 28857
REC. EV. DIST. COND. BRS-E-55B 28859
BRS-E-55A 28858
WST. EV. DIST. COND. WL-E-53 28838
WTT WL-TK-63A & B 28831
WLD SUMP A WLD-P-101A & B 28229
FDT WL-TK-59A & B 28829
WST. CONC. TK WS-TK-76 28735
SRST RS-TK-79A & B 28252
WLD SUMP B WLD-P-101C & D 28229
ALT. SOLID STATE WS-HV-18278 28741
CRYST. VAPOR BODY WS-EV-6 28739
CRYST. VG COOLER WS-E-161 28740
WASTE FEED TK WS-TK-198A 28736
CRYST. VG COOLER WS-E-158 28736
WASTE FEED TK WS-TK-198B 28736
SB-E-93A, B & C 28624
2-T-165
WLD DR 415 28227
FROM CS-TK-64 28724 LETDOWN DEGAS.
SAMPLE CONNECTION (TYP 2 PLACES)
L-TDN DEGAS CS-TK-64 28724
SAMPLE VESSEL SS-MM-15-16 28916
NOR. VENT CL FLTR. PAH-F-16 28494
2" PLUG
CVCT 01-41 28725
DCR 97-37
FLASH STM COND. SB-E-93B 28626
NOR. VENT CL. FLTR. PAH-F-16 28494
TK-188 SAFETY VALVE SURGE TANK
NG 28135
WLD DR. 281 28223
HYDROGENATED VENT HEADER
AERATED VENT HEADER
RCDT WLD-TK-55 28218
RC VENT EVAC. PUMP SKID-14 28782
APV RC-E-1 28845
PZR RC-E-1B 28846
DR-141 SEE NOTE 12
REACTOR COOLANT VENT HEADER
RC VENT EVAC. PUMP SKID-14 28782

FOR P&ID REFERENCE DRAWINGS, SYMBOLS AND ABBREVIATIONS REFER TO DRAWINGS P&ID - LEGEND 1 AND P&ID - LEGEND 2

NOTES:

1. WORK THIS DRAWING WITH DRAWING 28779 & 28782.
2. DELETED
3. ALL PIPING, VALVES, EQUIPMENT AND INSTRUMENTS HAVE SYSTEM PREFIX VG UNLESS NOTED OTHERWISE.
4. ALL LINES, EQUIPMENT, COMPONENTS AND INSTRUMENTS ARE SAFETY CLASS NNS UNLESS NOTED OTHERWISE.
5. DELETED
6. DELETED
7. DELETED
8. △ INDICATES REVISION LEVEL.
9. 2-3"-VG-V5I, 2-1" VG-V69 AND 2-3"-VG-V95 SHOULD BE CLOSED AND LOCKED DURING CONSTRUCTION OF UNIT NO 2.
10. (A) TO 2-3"-VG-V57 (UNIT 2) VG-V76 SHALL BE ADMINISTRATIVELY MAINTAINED OPEN BY ISOLATING THE AIR SUPPLY VALVE TO THE ACTUATOR DURING UNIT 2 CONSTRUCTION
11. INSTALL THREADED CAP WHEN HOSE CONN. IS NOT INSTALLED.
12. QUICK DISCONNECTS MAY BE INSTALLED UPSTREAM OF PIPE CAPS AS DEEMED NECESSARY BY STATION STAFF TO FAICILITATE VENT AND DRAIN OPERATIONS.

PORTIONS OF THIS DRAWING ARE
NUCLEAR SAFETY RELATED

REF. DRAWING NO.	REV	TITLE
9763-F-805636	8	EVS. AERATED VENT SYSTEM P&ID.
9763-F-805635	8	EVS. HYDROGENATED VENT HDR. P&ID.
9763-F-805622	6	EVS. REACTOR COOLANT VENT HDR. P&ID.

REV	DATE	DSGN	DRWN	CHKD	CDE	SES	DESCRIPTION
20		BCS					INCORP DCR 97-37 DCN#88
19	12/18/97	DWS		MPW	BCS	ETM	INCORP. DCR 97#816 DCN#8 & 4
18	6/12/97	MPW		DWS	FAC	RRC	INCORP. MM00 96-531 DCN 88
17	5/14/97	MPW		DWS	HWM	WFZ	PARTIAL INCORP DCR 97-16 CAB
16	11/12/96	MPW		BCS	HWM	MHO	INCORP DCR 92-37 CA01
15	3/4/96	BCL		MPW	DWS	DMO	INCORP MM00 92-548 CA8
14	6/6/94	BCL		DWS	MPW	GRM	INCORP DCR 89-881 CA8
13	6/15/93	MRB		BCL	DWS	VWS	INCORP DCR 91-32 CA8
12	11/3/92	DWS		BCL	MRB	WFZ	INCORP DCR 90-3 CA8 & ECA 19/1157554
11	10/26/92	BCL		DWS	MRB	DJM	INCORP DCR'S 90-19 CA8, 1 & 88-82 CA8, PARTIAL INCORP DCR 89-1 CA8.2
10	4/23/92	MRB		BCL	DWS	JEV	INCORP. MM00 91-515 CA8
9	10/4/91	GPM	JM	FCB	MRB	RSG	INCORP. DCR 89-67 CA8
8	10/24/90	MRB	JM	FCB/RHC	APL	BCL	INCORP. MM00 90-681 CA88 DELETED OPEN ITEM REFERENCE PER CHANGE DOCUMENT TRACKING SYS. (CDT)
7	12/28/89	MRB	RHC	PAL	APL	MAC	INCORP. DCR 86-116 CA & 86-113 CA 1 REVISED CONTINUATION TAG LETTER
6	5/17/88	GPM	RHC	APL	BCL	PAS	INCORP. DCR 88-57 REVISED: NOTE 4 ADDED: NOTE 9, REFERENCE FOR 2-V69 PER UE & C DWG 805635 DELETED: NOTE 9, REFERENCE FOR 2-V129 PER UE & C DWG 805635
5	1/6/88	MPW	RHC	DWS	BCL	MJY	INCORPORATED DCR 87-314. ADDED: NOTE 10 AND LINE SIZE. REINCORP. 87-812. MOVED 3" WLD LINE TO P & ID WS-28735. REVISED I&C TUBING & SAMPLE CONN'S NOTE 4, AND SYSTEM PREFIX.
4	4/7/87	WDS	HJW	JDM	BCL	VWS	INCORP. DCR 87-0812. REVISED REF DWG REVISIONS. INCORP DCR 87-0813, ADDED NOTE 9.
3	12/3/86	MAP	DWS	WRD	BCL	RRC	INCORP DR 82/2768, ECA'S 86/1168888 19/1161544 & 19/1161648, REVISED PER UE&C PIPING ERECTION ISO'S & P&ID'S. DELTD NOTE 5, ADDED DWG LOC CORRD'S. AND NOTE 8. INCORP'D ECA 86/1183830
2	6/25/86	JDM	MRB	DWS	JMS	RRC	UPDATE CONTINUATIONS ADDED UNIT 2 PIPING TO SHOW CAPS TO ISOLATE UNIT 1. UPDATE REF DWG INCORP. ECA'S 19/1160544, 19/1151484 & 74/114774A, 19/1153228 ECA 85/1108863A
1	2/25/86	DH	SKN	DWS	DHF	WFD	ISSUED FOR OPERATIONS
0	3/19/85	DS	MRB	DWS	DHF	WFD	ISSUED FOR FIELD VERIFICATION

North Atlantic Energy Service Corporation

SEABROOK STATION

VENT GAS SYSTEM

PID- 1-VG-B20780

05/26/00

PID- 1-VG-B20782

NHY PID20782.DGN1

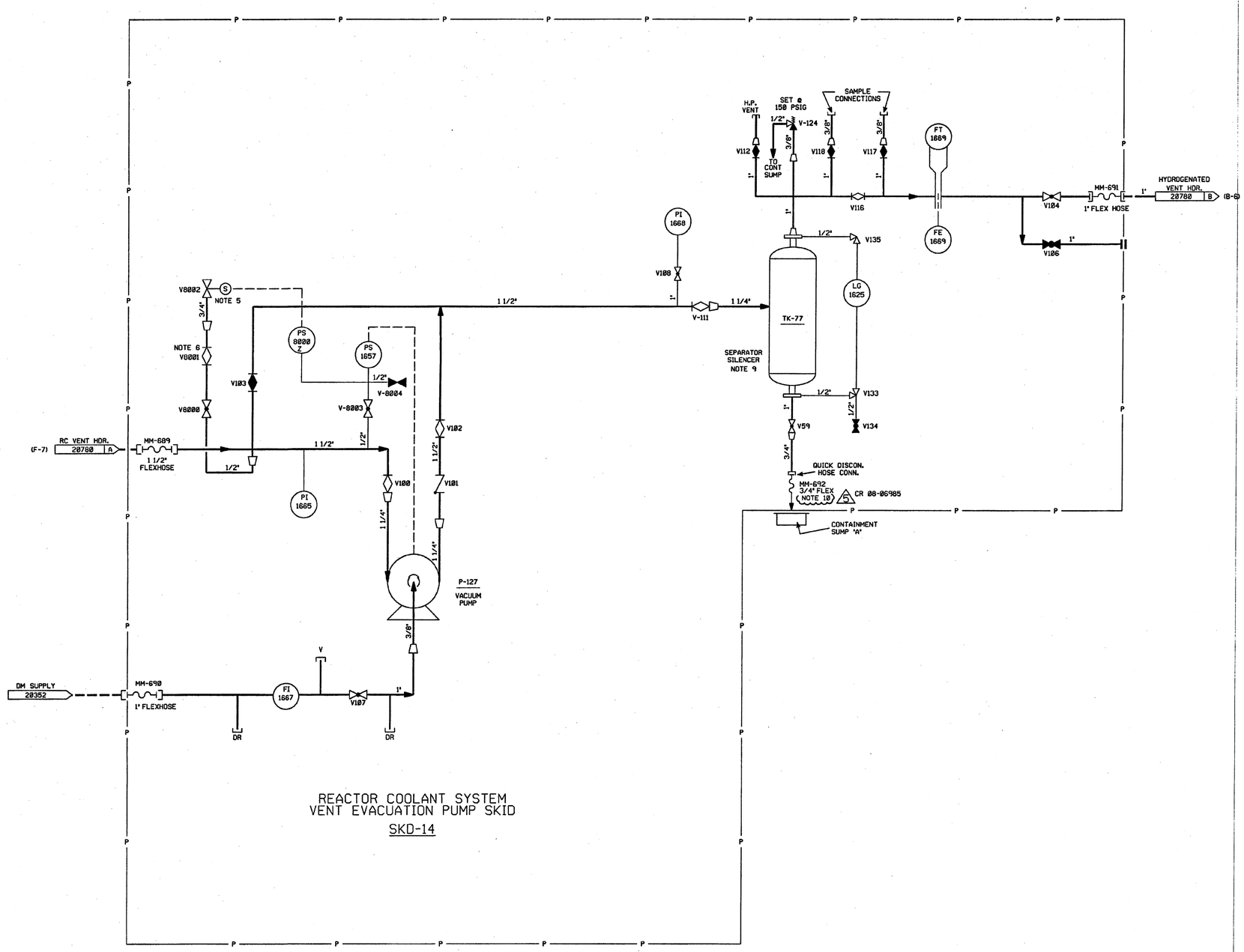

FOR P&ID REFERENCE DRAWINGS, SYMBOLS AND ABBREVIATIONS REFER TO DRAWINGS P&ID - LEGEND 1 AND P&ID - LEGEND 2

NOTES:

1. WORK THIS DRAWING WITH 20780.
2. SYSTEM DESCRIPTION NO IS 34.
3. SYSTEM PREFIX IS "VG" UNLESS OTHERWISE NOTED.
4. SYSTEM DESIGN PRESSURE (EXCLUDING PUMP) =150 PSIG.
   PUMP DESIGN PRESSURE =15 PSIG
   SYSTEM DESIGN TEMPERATURE =160° F
5. VACUUM BREAKER ASSEMBLY CONSISTING OF V-8000, V-8001 V-8002, AND PS-8000Z-SET AT 20 IN. HGVAC.
6. VALVE V-8001 IS SET TO METER FLOW TO MAINTAIN 19 1/2 IN. HGVAC.
7. ALL PIPING AND INSTRUMENTS ARE SAFETY CLASS NNS UNLESS NOTED OTHERWISE.
8. △ INDICATES REVISION LEVEL.
9. DURING PERIODS OF PRESSURIZER PURGING, 1-VG-SKD-143 MAY BE INSTALLED IN PLACE OF 1-VG-TK-77. REF. DCR 97-16.
10. FLEX HOSE MM-692 IS STORED LOCALLY AND INSTALLED AS NEEDED FOR SYSTEM OPERATION. CAP INSTALLED WHEN NOT IN USE. △5 CR 08-06985

REV	DATE	DSGN	CHKD	CE	DESCRIPTION
5	8/15/08	JM	BCS	VWS	INCORP CR 08-06985 REV 00
4	12/10/97	MPW	BCS	ETM	INCORP. DCR 97-16 DCN 00 & 04. REMOVED LATER CONTINUATION
3	9/24/90	MRB	JM	BCL	INCORP. MMOD 90-516 CA 0
2	11/18/86	JDM	WRD	RRC	INCORP. ECA 00/1167968, REV'D VALVE TYPES & POSITION PER UE&C P&ID. REV'D REVISION BLOCK & ADDED NOTE 8, DWG. LOC. COORD'S.
1	6/16/86	BCL	JDM	RRC	ISSUED FOR OPERATIONS, ADDED TAG NUMBERS
0	2/28/85	MOB	JNM	WFD	INITIAL ISSUE

REF. DRAWING NO.	REV	TITLE
9763-F-805622	6	EVS. REACTOR COOLANT VENT HDR. P & ID

FPL ENERGY Seabrook Station

VENT GAS SYSTEM
RCS AIR EVACUATION SKID
P & I DIAGRAM

PID- 1-VG-B20782

08/08/08