# DOE-Idaho TMI-2 ISFSI License Renewal Pre-Application Meeting with NRC

June 15, 2016

# Discussion Topics

- ***TMI-2 License Renewal Team***
- ***TMI-2 ISFSI Overview***
- ***Overview of LRA Approach***
- ***Project Schedule Milestones***
- ***Summary of Aging Management Activities***
- ***Supplemental Environmental Report***
- ***Closing Remarks***

# TMI-2 ISFSI License Renewal Team

- ***Scott Ferrara – ISFSI Licensing Manager***
- ***Nick DiNunzio – General Counsel***
- ***Brian Gutherman – ISFSI LRA Team Leader***
- ***Greg Hall – ISFSI LRA Engineering***
- ***John Coody – ISFSI LRA Project Manager***
- ***Chris Backus – ISFSI LRA Engineering***
- ***Chuck Temus – ISFSI LRA Engineering***

# TMI-2 ISFSI

## TMI-2 ISFSI (cont'd)

- ***SNM license 2508 expires 3/19/2019***
- ***NUHOMS 12T system***
  - ***30 total Horizontal Storage Modules (HSMs); 29 HSMs loaded***
  - ***Modified (unventilated) version of Standardized NUHOMS HSM***
  - ***Modified (ventilated) version of the Dry Shielded Canister (DSC)***
- ***DSCs are coated carbon steel, vented, with HEPA filters***
- ***HSMs have rear access door with vent holes***

# TMI-2 ISFSI (cont'd)

- ***HSM 15 contains an empty DSC overpack and overpack support structure***
- ***HSM 16 was the first loaded***
- ***Each DSC contains up to 12 of some combination of the following (all contents are canistered):***
  - ***Fuel canister (large fuel pieces)***
  - ***Knockout canister (small debris, up to fuel pellet size)***
  - ***Filter canister (very small debris, 0.5-800 µm)***
- ***About 83 MTU total in storage***

## TMI-2 ISFSI (cont'd)

- ***267 fuel canisters, 12 knockout canisters, 62 filter canisters contain the remains of 177 TMI-2 fuel assemblies***
- ***Each TMI-2 canister is about 150 inches long and 14 inches in diameter, weighing about 2,900 lbs***
- ***No additional material can be stored at the ISFSI per license***
  - ***Limited to only TMI-2 reactor core debris***

# TMI-2 ISFSI (cont'd)

- ***Site location has large controlled area boundary (CAB)***
  - ***CAB is INL site boundary***
  - ***Distance to nearest CAB is 13.7 km (southern edge)***
- ***TMI-2 was a B&W reactor and operated for about three months; fuel burnup only about 3.2 GWd/MTU***
- ***15x15 fuel w/maximum initial enrichment of about 3 wt %***
- ***38 years cooling between date of accident (March, 1979) and LRA submittal (March, 2017)***
- ***HSMs and DSCs have 50-year design life***

# TMI-2 Canisters (FSAR Figures 3.3-1, -2, and -3)

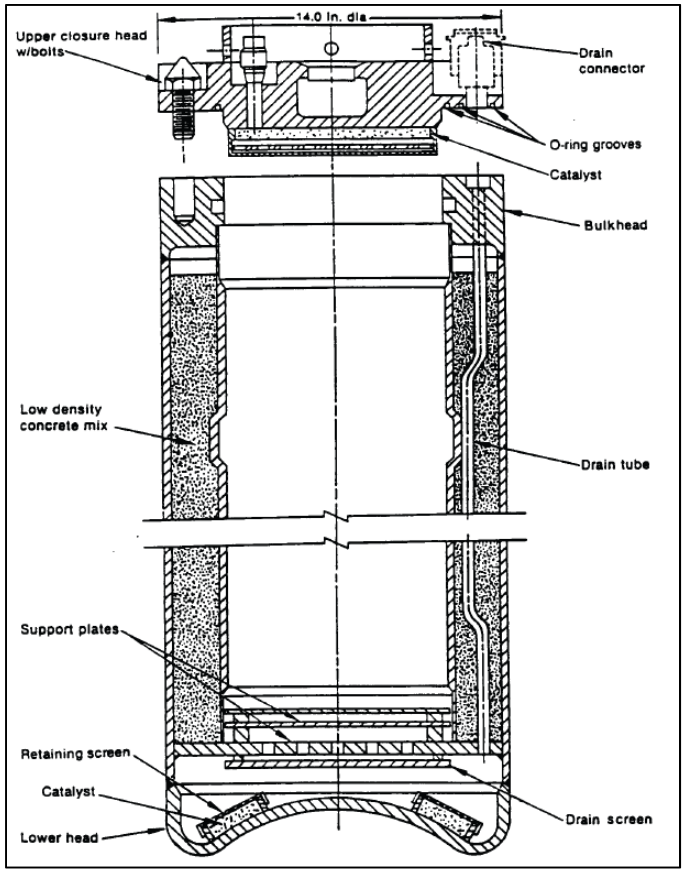


***Fuel Canister***

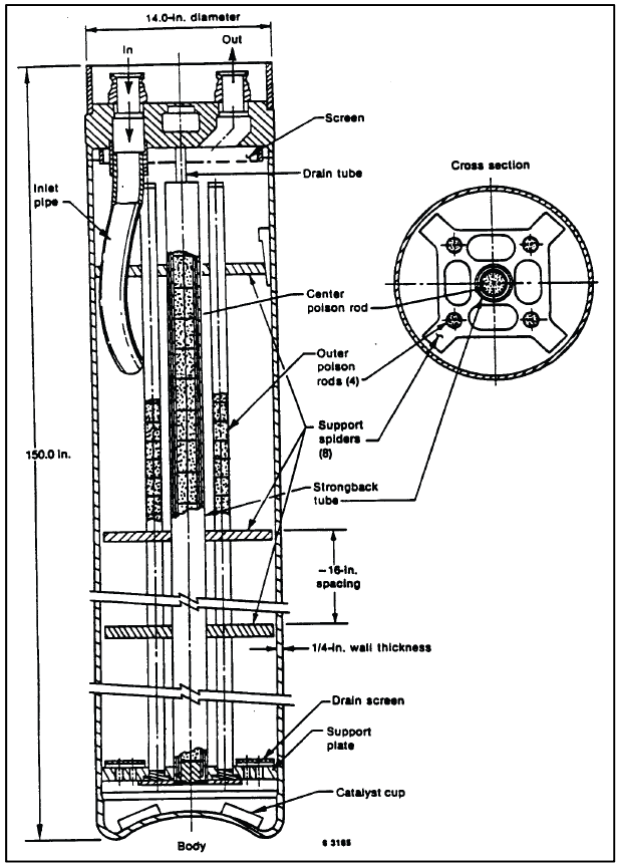


***Knockout Canister***

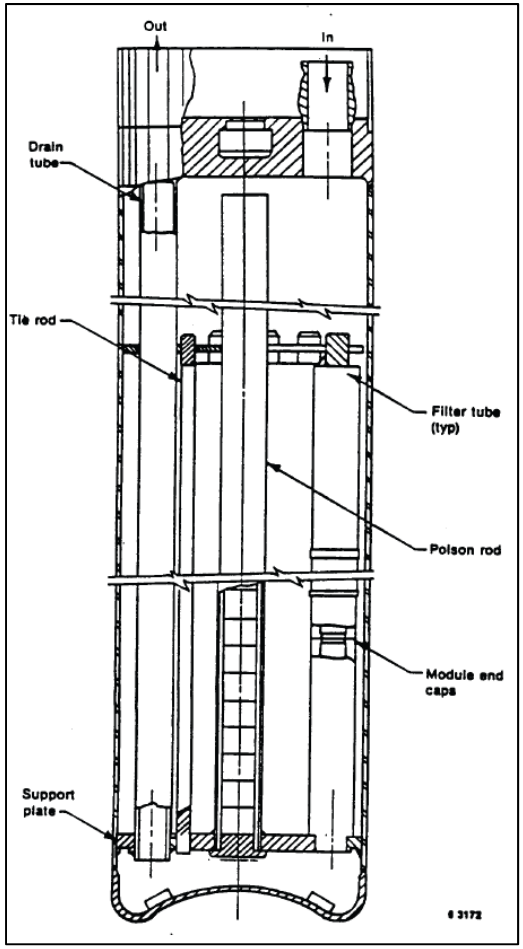


***Filter Canister***

# DSC Cutaway (FSAR Figure 1.2-4)

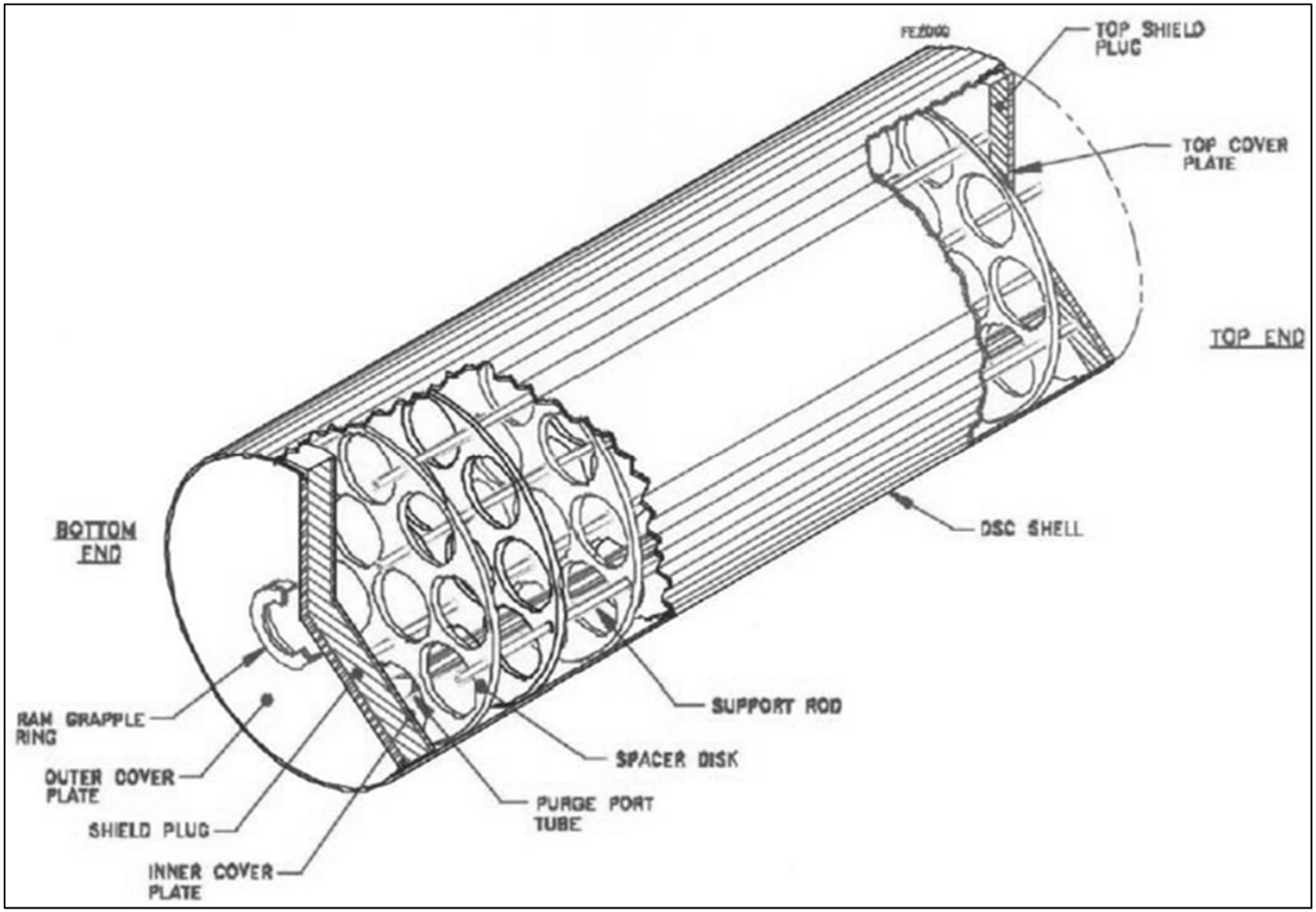

# DSC Vent/Purge Assemblies and HEPA Filters (FSAR Figure 4.3-1)

## *Vent*

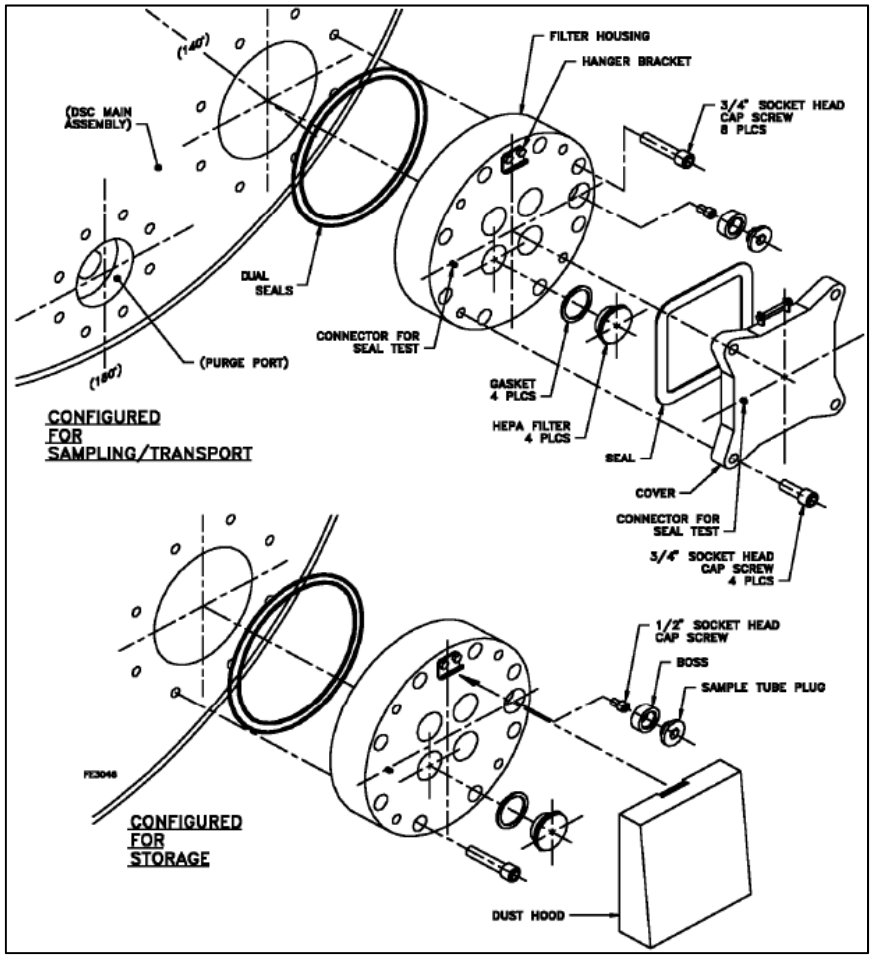


## *Purge*

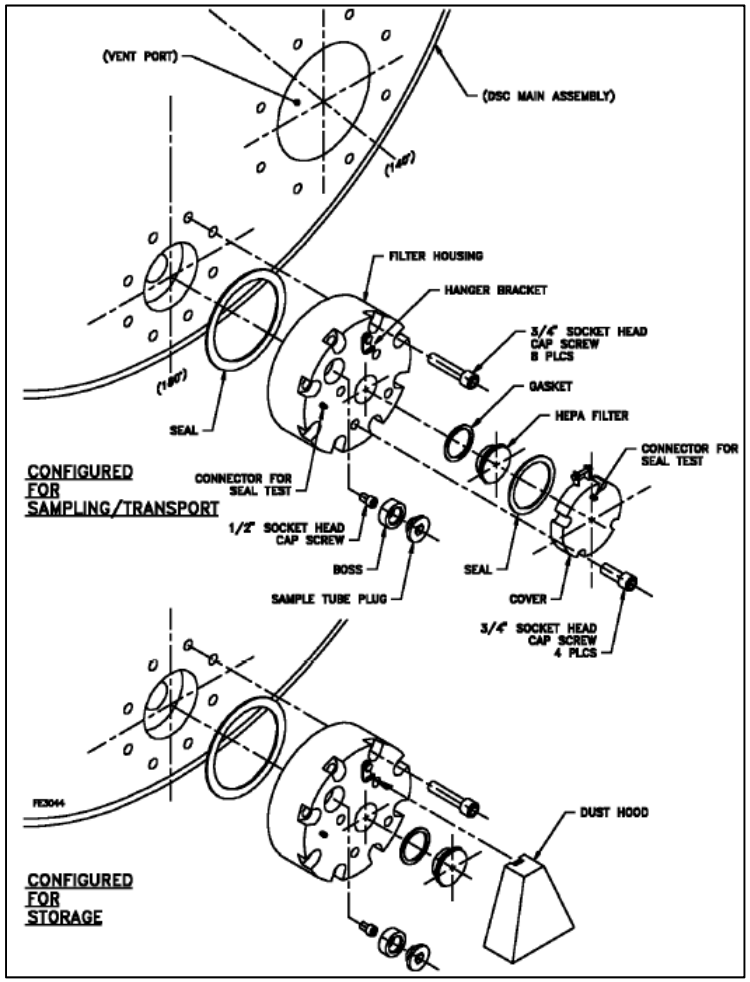

# TMI-2 ISFSI (cont.)

## *TMI-2 DSC Loading*

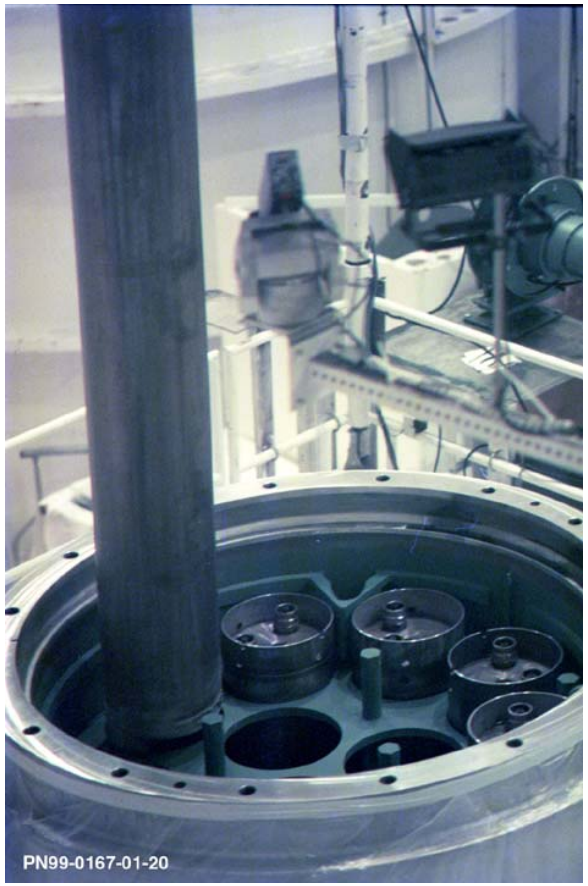


## *DSC Purge and Vent Ports*

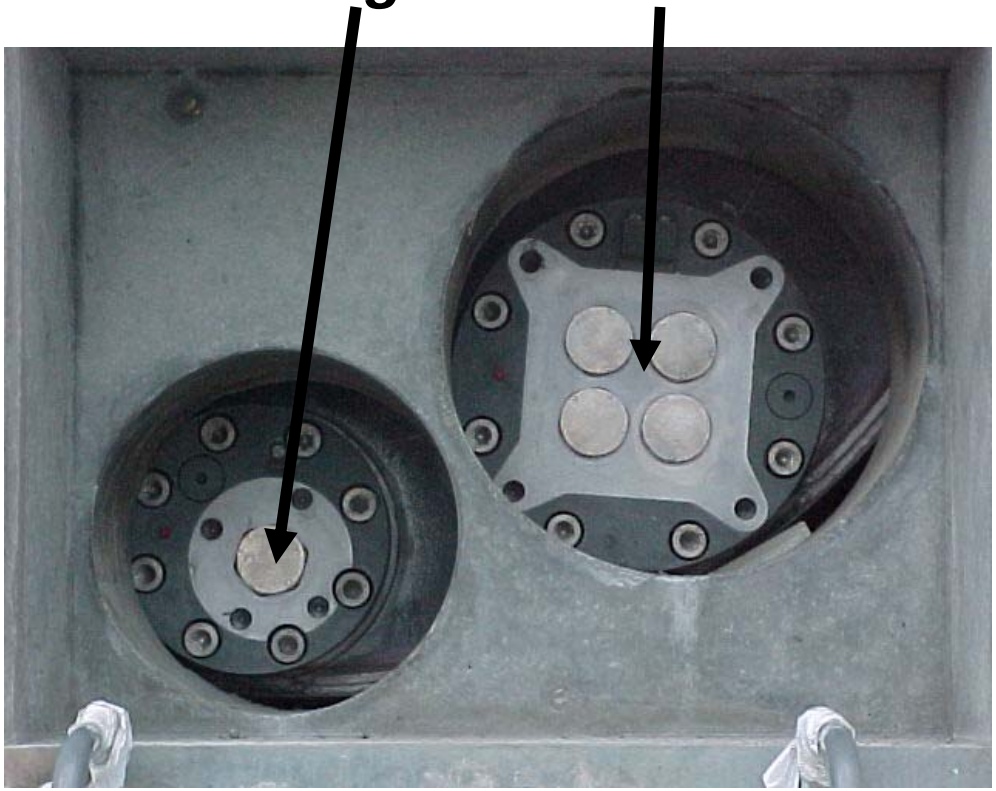

***View via HSM Rear Access Door***

# HSM Cutaway - Front (FSAR Figure 1.2-2)

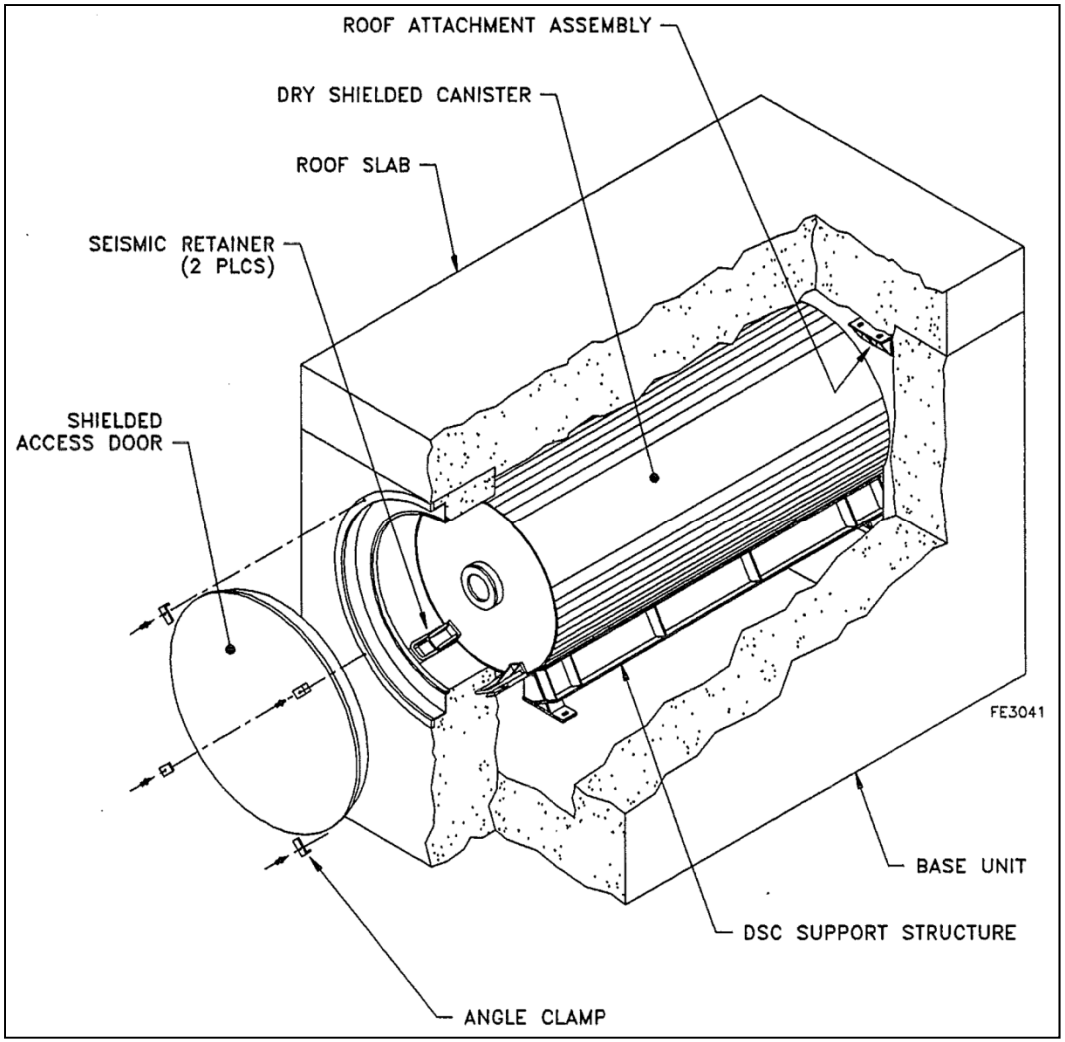

# HSM Cutaway - Rear (FSAR Figure 1.2-3)

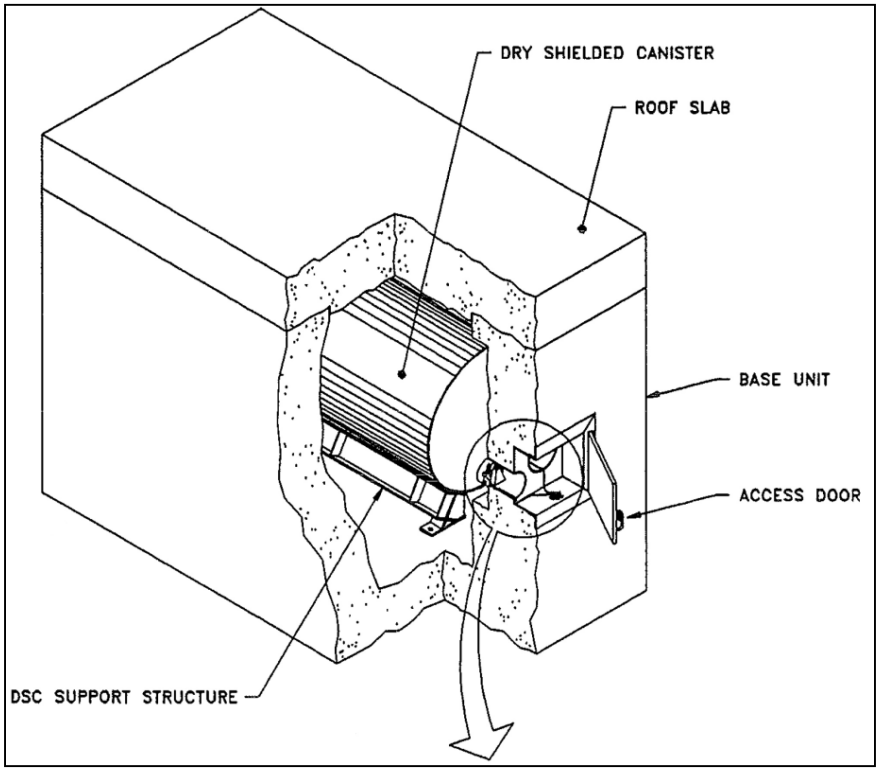


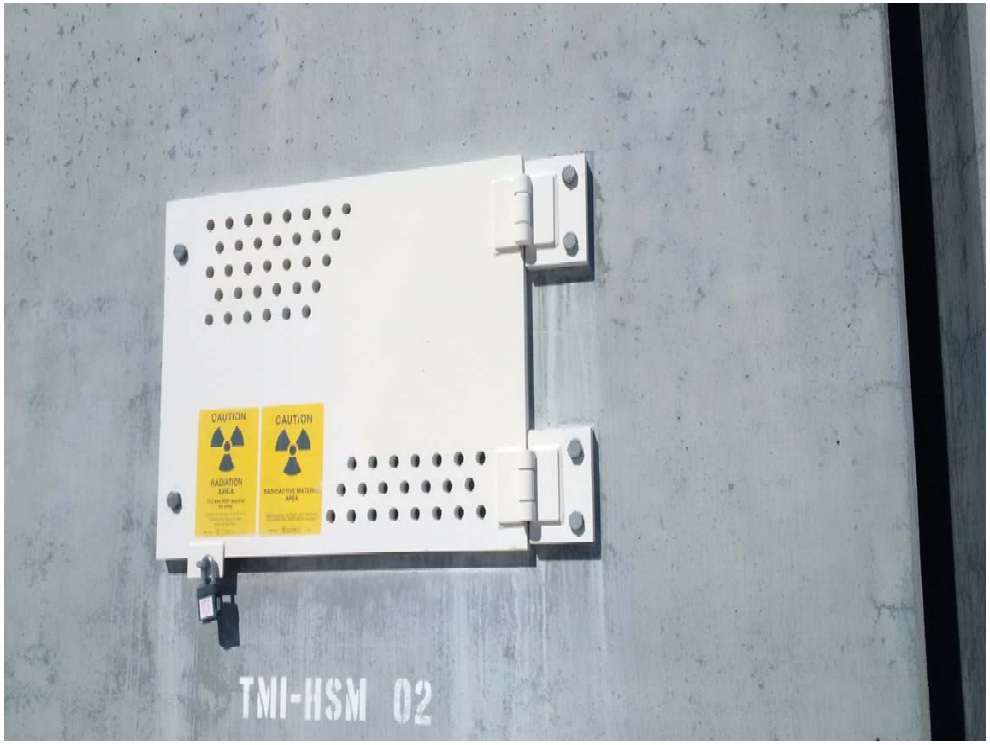


***Rear Access Door***

# Overview of LRA Approach

- ***Preparation of the LRA will consider the guidance in NUREG-1927, Rev. 1 and NEI 14-03, Rev. 1***
  - ***LRA work began in advance of these efforts***
- ***Consider relevant elements of FSV, Calvert Cliffs, VSC-24, NUHOMS 1004, North Anna, and other renewal applications***
- ***DOE-ID is evaluating the use of tollgates in the LRA***
- ***DOE-ID is evaluating participation in ISFSI Aging Management INPO Database (AMID) via AREVA-TN***

## Overview of LRA Approach (cont'd)

- ***20-year period of extended operation (PEO) to 2039***
- ***ANL report on dry cask storage AMPs and MAPS Report will be considered***
- ***ASME XI Task Group Code Case schedule is beyond LRA submittal schedule***
- ***Some key issues generally pertaining to ISFSI and CoC renewal either do not apply or are not significant***
  - ***No high burnup fuel***
  - ***DSCs are coated carbon steel***

# LRA Format

- **Section 1: General Information**
- **Section 2: Scoping Evaluation**
- **Section 3: Aging Management Review (AMR)**
- **Section 4: Time Limited Aging Analyses (TLAAs)**
- **Appendix A: Aging Management Programs (AMPs)**
- **Appendix B: Exemptions**
- **Appendix C: Proposed license/TS changes**
- **Appendix D: FSAR Supplement**
- **Appendix E: ER Supplement**

# Overview of LRA Approach (cont'd)

- ***Ongoing HSM monitoring and corrective maintenance program is likely the HSM AMP***
  - ***Will evaluate the need for any changes to make it the AMP***
- ***Four exemptions currently embedded directly in the license***
  - ***10 CFR 72.102(f)(1) – Seismic design criteria***
  - ***10 CFR 72.124(b) – Fuel basket neutron absorber efficacy***
  - ***10 CFR 72.82(e) – Pre-op test reporting***
  - ***10 CFR 20.1501(c) – Dosimetry instrument calibration***
- ***One existing TS surveillance can serve as an AMP***
- ***Use of TLAAs***

# TMI-2 ISFSI LRA Project Milestones

- ***2011 - License renewal project plan developed***
- ***2011 – HSM corrective maintenance plan implemented***
- ***2012 – Initial scoping evaluation and AMRs performed***
- ***2012-2015 - Remote visual inspections of DSC externals/HSM internals***
- ***2012-2016 – HSM external inspections***
- ***2016 – Finalize scoping, AMRs, and AMAs***
- ***Early 2017 – Final LRA material preparation, review and approval***
- ***3/5/2017 – Target date for submittal of LRA to NRC***

# Summary of Aging Management Activities

- ***Pre-application inspections***
- ***Scoping evaluation***
- ***AMR – Materials/environments/aging mechanisms/effects***
- ***Technical disciplines***
  - ***Structural***
  - ***Thermal***
  - ***Shielding***
  - ***Criticality***
  - ***Confinement***
  - ***Retrievability***
- ***Aging management activities***

# Pre-Application Inspections – HSM Exterior

- ***2009: In response to observations of HSM surface degradation, a consultant performed a comprehensive study of the HSM concrete***
- ***2011: Repairs implemented to stop water intrusion***
  - ***Roof bolt holes***
  - ***Concrete cracks***
- ***2012: Inspected HSM external surfaces, end shield walls, and basemat to determine effectiveness of repairs***
- ***Findings***
  - ***HSM: Repairs holding up well, negligible water intrusion***
  - ***No new unexpected cracking***
  - ***Existing minor cracking stable***
  - ***Epoxy injections (corner cracks) bonding good condition***

## Pre-application Inspections (cont'd)

- ***DSC exterior and HSM interior (2012)***
  - ***Remote visual inspections***
    - ***HSM-16 storing DSC-2 chosen for inspection***
  - ***DSC was first DSC loaded – longest service time***
  - ***DSC support structure components (e.g., DSC rails, hardware, support embedments***
  - ***DSC Findings:***
    - ***Light general corrosion (staining) in some areas and moderate corrosion in the uncoated areas (adjacent to closure welds)***
    - ***Coating in overall good condition; remains intact (not in scope)***

# Scoping Evaluation

- ***SSCs are scoped in under one of three criteria from NUREG-1927:***
  - ***Criterion 1 – Important to Safety***
  - ***Criterion 2 – Not important to safety but failure could impact a safety function***
  - ***Section 2.4.2.1 - Internals***

# Results of Scoping Evaluation – HSM

- ***HSMs (Criterion 1)***
  - ***Concrete base unit***
  - ***Roof slab***
  - ***End shield wall***
  - ***Shielded (front) door assembly***
  - ***Carbon steel reinforcement (re-bar)***
  - ***DSC support structure***
- ***Shielding, structural, thermal, retrievability***

# Results of Scoping Evaluation – DSC Externals

- ***DSC (Criterion 1)***
  - ***Shell***
  - ***Top outer cover plate (no inner coverplate)***
  - ***Bottom inner and outer cover plates***
  - ***Top and bottom shield plugs***
  - ***RAM grapple ring***
  - ***Vent/purge housing seals***
  - ***HEPA filters***
- ***Structural, shielding, thermal, confinement, retrievability***

## Results of Scoping Evaluation – DSC Internals

- ***TMI-2 canisters (in scope per Section 2.4.2.1 of NUREG-1927, Revision 1)***
  - ***Shell and head***
  - ***Lower plate***
  - ***Neutron absorbers***
  - ***Internal structures***
- ***DSC basket assembly (Criterion 2) (still evaluating)***
  - ***Spacer disks***
  - ***Support rod***
  - ***Spacer sleeve***

# Results of Scoping Evaluation – Other SSCs

- ***Transfer Cask (Criterion 1) MP-187 & OS-197***
  - ***Shielding, structural, thermal, retrievability***
- ***Basemat/Approach Slab (Criterion 2)***
  - ***Retrievability***

# Materials/Environments

- ***Materials***
  - ***Carbon steel***
    - ***DSC shell***
  - ***Reinforced concrete***
    - ***HSM***
    - ***Basemat/approach slabs***
  - ***Stainless steel***
    - ***TMI-2 canisters***

# Materials/Environments

- ***Environments:***
  - **HSM exterior concrete and doors**
    - **Outdoors - High Dry Desert**
    - **Average Monthly Min and Max Temps. (4°F - 87°F)**
    - **Average annual precipitation 8.71 inches**

    **(FSAR, Chapter 2)**
  - **Concrete reinforcement**
    - **Embedded**
  - **HSM interior surfaces, DSC exterior, and DSC support structure**
    - **Sheltered - ambient**
  - **DSC Interior & TMI-2 Canisters**
    - **Sheltered – torturous path to ambient**

# Aging Effects and Mechanisms Requiring Management

- **HSM concrete**
  - **Scaling, cracking, and spalling from freeze-thaw-cycles**
  - **Increase of porosity and permeability from leaching of calcium hydroxide**
- **HSM steel support components**
  - **Loss of material from corrosion**
- **DSC exterior and interior coated carbon steel**
  - **Loss of material from corrosion**
- **Basemat/approach slab**
  - **Differential settling from changing subgrade conditions**

# Structural

- ***HSMs/DSCs designed for normal, off-normal, seismic & wind/tornado loadings***
- ***Current aging assessment:***
  - ***Minimal changes to concrete HSM and shield wall thickness and integrity***
  - ***Carbon steel DSC shell and top/bottom outer cover plate aging effects bounded by corrosion assumptions in design basis structural analyses***
    - ***Current AMR estimates uniform carbon steel corrosion at less than 4 mils over 40 years***
    - ***50-year design basis is uniform corrosion of 10 mils on DSC top and bottom cover plates, 75 mils on DSC shell***
    - ***No credit taken for oxidation protection provided by zinc primer coating***

# Thermal

- ***Maximum - DSC decay heat load 1996, 314W***
  - ***20 years additional cooling (195W in 2019)***
  - ***No credit for heat removal provided by DSC vents***
  - ***HSM not credited for convection due to low heat (no vents)***
- ***Current aging assessment:***
  - ***Aging of DSC and HSM has an insignificant effect on storage system thermal performance***
  - ***DSC and HSM heat transfer properties essentially unchanged***

# Shielding

- ***HSM walls, roofs, end shield walls, DSC, and TMI-2 canister modeled in shielding analysis***
  - ***Source term decayed 20 more years since license***
  - ***No additional material to be stored***
  - ***No additional structures, e.g., earthen berms credited***
- ***Current aging assessment:***
  - ***HSM/DSC thickness (negligible changes over PEO)***
  - ***Measured dose rates on surfaces of HSMs is lower than original estimates in FSAR***
  - ***DSC and HSM shielding effectiveness won't significantly change with age***
  - ***No polymeric neutron shield materials used in DSC or HSM***

# Criticality

- ***Neutron-absorbing materials inside the TMI-2 canisters (boron and stainless steel)***
- ***Geometric control of the fissile material within the TMI-2 canister***
- ***Current aging assessment (TLAA):***
  - ***Neutron absorber efficacy remains high over long time periods in dry storage***
  - ***Only 75% initial poison loading credited in FSAR***
  - ***Low neutron flux (negligible poison burnup) and structural stability limits deterioration***

# Confinement

- ***DSC primary confinement boundary***
  - ***No additional material to be stored***
  - ***Source term decayed 20 more years since license***
  - ***Majority of volatile fission products released during TMI-2 accident or during 10 years of TAN storage***
  - ***No driving pressure forcing material into environment***
- ***Current aging assessment:***
  - ***TMI-2 canisters' function under review***
    - ***Limit dispersion inside DSC but not credited in confinement analysis***
  - ***Vent/purge housing seal integrity governed by TS LCO***
  - ***Insignificant impact to DSC lid corrosion allowance of 10 mils and shell allowance of 75 mils over 50 years***
  - ***Pitting/crevice corrosion impacts under review (no significant driver)***

## Retrievability

- ***There are no bare fuel assemblies being stored***
- ***All core debris is contained within the TMI-2 canisters***
- ***Retrievability for TMI-2 material is on a DSC basis, per ISG-2, Revision 2***
- ***DSCs are retrievable by removing them from the HSM directly into a transfer cask***

# HSM AMA

- ***HSM concrete AMP already implemented and working successfully***
  - ***Continue to monitor in accordance with existing program***
  - ***Concrete continues to perform its intended functions***
  - ***Annual visual inspections of HSM externals***
  - ***Inspect repaired items for any premature aging***
  - ***Current concrete management program to be integrated into AMP, with any modifications, as appropriate***
  - ***AMP based on ACI 349.3R and GALL Report***
  - ***Verify coating and sealant performance***
  - ***Repair as necessary (coat seal cracks, repair spalled areas)***

# HSM Roof Corner

2012
Pre/App
Inspection

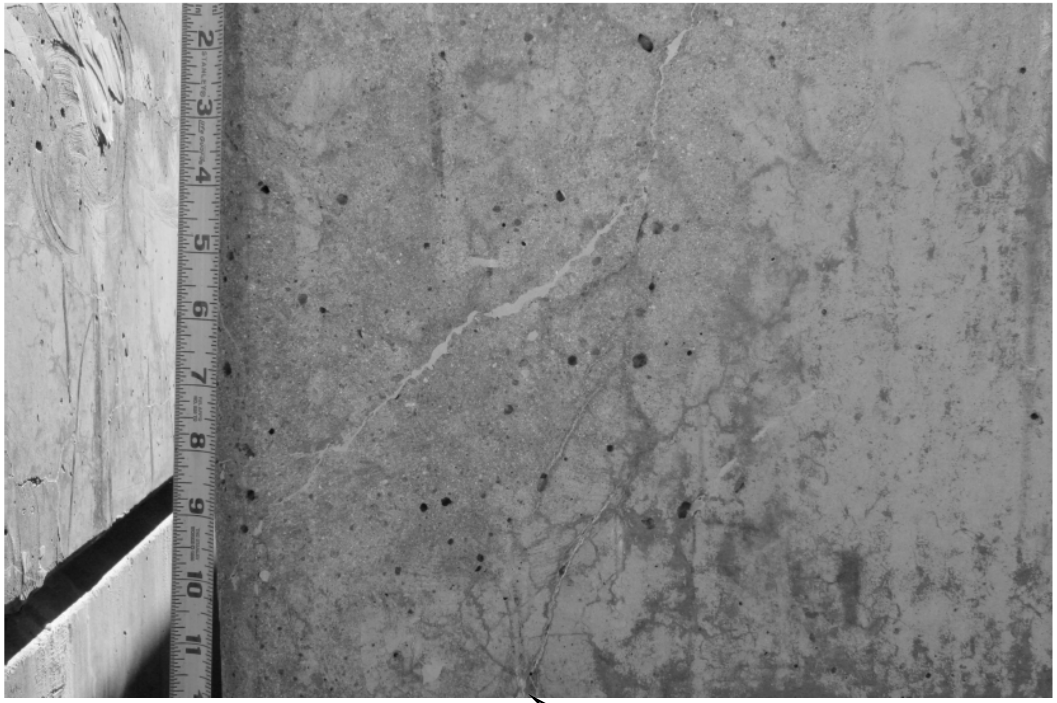

2015
Annual
Inspection

# DSC – External AMA

- ***DSC External AMP under development***
- ***Considerations:***
  - ***Perform additional baseline DSC borescope inspections (DSC #2, DSC overpack, and additional DSCs)***
  - ***Corroborate aging expectations from earlier 2012 inspections***
  - ***Trend any changes during the upcoming storage period***
  - ***Corrosion rates compared with nearby facility coupons***

    ***(Irradiated Fuel Storage Facility - IFSF: spent fuel stored in similar environment)***
  - ***Vent/purge housing seals governed by TS LCO 3.1.1 that ensures continued operability***

# DSC – Internals AMA

- ***DSC Internals AMA under review***
- ***Considerations:***
  - ***Vented DSCs (sheltered ambient environment)***
  - ***Venting is unique to TMI-2 DSCs (no precedent)***
  - ***Hydrogen monitoring governed by TS***
  - ***Indicates radiolysis not the driver***
  - ***Instead related to corrosion actions within DSC***
- ***Use measurements to evaluate corrosion rates***
  - ***Continued use of hydrogen monitoring to estimate carbon steel corrosion may be incorporated into the AMA***
  - ***Corrosion rates compared with nearby facility coupons***

# TMI-2 Canister AMA

- ***TMI-2 Canister AMA under development***
- ***Considerations:***
  - ***Fissile/source material configuration***
  - ***Stainless steel less susceptible to general corrosion***
  - ***Low halide environments (e.g. chlorides)***
  - ***Inaccessible – inside DSC***
  - ***20 mils corrosion allowance used in original pressure vessel structural analysis***

# Basemat/Approach Slab AMA

- ***Basemat/approach slab AMA under development***
- ***Considerations:***
  - ***Provides firm/level surface for alignment of TC with HSM during DSC insertion/retrieval***
  - ***Evaluate current impact of differential settling at ISFSI***
  - ***Review of previous biennial inspection results***

# OS-197 Transfer Cask/MP-187 Transport Cask AMA

- ***DOE-ID would use an ITS procurement process to acquire a TC if and when needed***
  - ***Several TCs are owned by AREVA-TN***
  - ***Single MP-187 located at Rancho Seco***
- ***No AMP will be proposed for either cask***
- ***As part of that procurement, AREVA-TN would ensure the TC offered:***
  - ***Meets all design and licensing basis requirements for use at the TMI-2 ISFSI***
  - ***Has been appropriately maintained and is ready for use***

# Summary of TMI-2 In-Scope SSCs

| SSC | Scoping Criterion | Aging Effect(s) | Aging Mechanism(s) | AMA |
|---|---|---|---|---|
| HSM and end shield walls | 1 | Scaling, cracking, spalling; porosity, permeability | Freeze-thaw cycles; leaching of calcium hydroxide | AMP-inspection |
| HSM Steel Support Structures | 1 | Loss of material | Corrosion types under evaluation | AMP-inspection |
| DSC Externals | 1 | Loss of material | Corrosion types under evaluation | AMP-inspection |
| DSC Vent/Purge housing seals and HEPA filters | 1 | Material degradation | Thermal, moisture, radiation effects | AMP – seal operability governed by TS. HEPA filters under review |
| DSC Internals | 2 | Loss of material | Corrosion types under evaluation | Under development |
| TMI-2 Canisters | (NUREG-1927, Section 2.4.2.1) | Loss of material | Corrosion types under evaluation | Under development |
| ISFSI Basemat/Approach Slabs | 2 | Differential settling | Changing subgrade conditions | Under development |
| TC: OS-197 or MPC-187 | 1 | Loss of material | Corrosion types under evaluation | None - not under DOE-ID control |

## *Supplemental Environmental Report*

- ***Identifies the evaluation of potential impacts of the continued storage of TMI-2 core debris at the existing facility***
- ***There have been no significant changes to site operations during the operating period that would adversely affect the conclusions of the original TMI-2 ISFSI ER***
- ***Will address changes in climatic conditions, population, local flora and fauna***

## Summary

- ***DOE-ID must continue operation of the TMI-2 ISFSI beyond its current license term***
- ***DOE-ID will submit a 10 CFR Part 72-compliant LRA no later than March 2017 to ensure timely renewal***
- ***The LRA will consider relevant recent and ongoing NRC, industry, and DOE Laboratory work and lessons learned from previous LRA submittals***