UNITED STATES
NUCLEAR REGULATORY COMMISSION
WASHINGTON, D.C. 20555-0001

April 18, 1999

Mr. David A. Lochbaum
Union of Concerned Scientists
1616 P Street, NW., Suite 310
Washington, DC 20036-1495

Dear Mr. Lochbaum:

I am responding to Petitions you submitted on behalf of the Union of Concerned Scientists (UCS), pursuant to Section 2.206 of Title 10 of the Code of Federal Regulations (10 CFR 2.206) on September 25, 1998, and November 9, 1998. In accordance with 10 CFR 2.206, the Office of Nuclear Reactor Regulation was assigned to prepare a response to your requests.

In the Petition of September 25, 1998, you requested that the U.S. Nuclear Regulatory Commission (NRC) order the River Bend Station (River Bend), operated by Entergy Operations, Incorporated (the licensee), to be immediately shut down and its operating license suspended or modified until the facility's design and licensing bases were properly updated to permit operation with failed fuel assemblies or until all failed fuel assemblies were removed from the reactor core. In the Petition of November 9, 1998, you filed a similar request that the NRC order the Perry Nuclear Power Plant, Unit 1 (Perry), operated by FirstEnergy Nuclear Operating Company (the Perry licensee), to also be immediately shut down for the same reasons stated for River Bend. Attached to the Petitions was a copy of a UCS report titled "Potential Nuclear Safety Hazard—Reactor Operation With Failed Fuel Cladding," dated April 2, 1998. In addition, you requested a hearing in the Washington, D.C., area to present new plant-specific information regarding the operation of River Bend and Perry, as well as to discuss the April 1998 UCS report. By letters dated October 29, 1998, and December 16, 1998, respectively, the NRC acknowledged receipt of the River Bend and Perry Petitions and extended the UCS an opportunity to present the new information at an informal public hearing.

In its report of April 2, 1998, the UCS asserted that existing design and licensing requirements for nuclear power plants preclude their operation with known fuel cladding leakage. The UCS position is based on the assessment of updated final safety analysis reports (UFSARs) of four plants, vendor documentation, standard technical specifications, and pertinent NRC correspondence. In addition to recommending that the NRC take steps to prohibit nuclear power plants from operating with fuel cladding damage, the report specifically recommends plant shutdowns upon detection of fuel leakage and that safety evaluations be included in plant licensing bases that consider the effects of operating with leaking fuel to justify operation under such circumstances.

The River Bend Petition stated that the licensing basis for worker radiation protection, as described in USAR Sections 12.1.1, "Policy Considerations," and 12.1.2.1, "General Design Considerations for ALARA Exposures," was violated whenever the licensee operated the plant with potential fuel cladding failures. The Perry Petition also asserted that the licensee appeared to be violating its licensing basis for worker radiation protection under its ALARA program. The Perry Petition referenced NRC Information Notice 87-39, "Control of Hot Particle Contamination at Nuclear Plants," and stated that industry experience has demonstrated that reactor operation with failed fuel cladding increased radiation exposures for plant workers.

20272

On February 22, 1999, a combined informal public hearing was held at NRC Headquarters regarding the River Bend and Perry 10 CFR 2.206 Petitions.

As stated in its April 1998 report, the UCS raises the following regulatory and safety concerns for plants operating with leaking fuel:

- 10 CFR 50.59, "Changes, tests and experiments," is violated because operation with fuel cladding leakage constitutes an unapproved change to the licensing basis for a plant.

- 10 CFR 50.71, "Maintenance of records, making of reports," is violated because the licensing basis as documented in the technical specifications and the analyses contained in the UFSAR for the facility do not accommodate operation with leaking fuel.

- Safety analyses for postulated accidents assume intact fuel cladding before the event; therefore, plants with known fuel leakage could have accidents with more severe consequences than predicted as a result of fuel damage.

- 10 CFR 50.34a, "Design objectives for equipment to control releases of radioactive material in effluents—nuclear power reactors," and other regulations related to the as low as is reasonably achievable (ALARA) principle for radioactive materials release are violated since plant workers are exposed to a greater risk than necessary because of higher coolant activity levels attributable to leaking fuel.

The Petition of September 25, 1998, also referred to several quotations taken from accident analyses described in the River Bend USAR. When taken alone or read literally, some of these statements could be interpreted that operation with preexisting failed fuel assemblies is not permitted. However, in each of the specific cases identified in the River Bend Petition, the technical basis clearly permits operation with a limited amount of fuel leakage and the design basis does not preclude the possibility of limited fuel leakage during operation. The Petition filed for Perry did not include similar references to its USAR.

The staff acknowledges that the wording associated with the specific River Bend USAR excerpts cited in the first Petition could be improved. However, when the USAR and other elements of the RBS licensing basis are taken as a whole, the intent of the statements in question is unambiguous and explicitly understood by the staff. Therefore, the staff does not agree with the UCS argument equating these concerns with issues relating to the spent fuel pool cooling system operation and refueling activities at Millstone, Unit No. 1, first raised in 1995 by the UCS. As previously stated and further explained in the Director's Decision, the River Bend licensing basis permits operation with a limited amount of fuel leakage as long as the licensee remains within the bounds prescribed by the technical specifications. Since the intent of the USAR references cited in the Petition is clearly understood when the entire licensing basis is considered, the staff finds that the licensee's USAR is acceptable on this issue. Although the licensee could improve the USAR if it clarified the language in the referenced sections to eliminate the apparent inconsistencies cited in the Petition, such an improvement is not required by either 10 CFR 50.59 or 10 CFR 50.71(e).

I have granted part of your Petitions by holding the informal hearing. However, as discussed in the enclosed Director's Decision, the staff does not agree with the conclusion that preexisting fuel cladding defects and resultant fuel leakage necessarily violate a plant's licensing basis, as previously stated. For the reasons stated in the Director's Decision, the specific actions requested in your Petitions of September 25, 1998, and November 9, 1998, are denied.

The denial notwithstanding, we appreciate your concern for nuclear safety and your willingness to bring matters, such as the importance of maintaining the integrity of a plant's licensing basis, to the attention of the NRC. Public health and safety are better served whenever individuals and organizations, such as the UCS, speak out.

A copy of the Director's Decision will be filed with the Secretary of the Commission for the Commission's review in accordance with 10 CFR 2.206(c). As provided for by this regulation, the Director's Decision will constitute the final action by the Commission 25 days after issuance, unless the Commission, on its own motion, institutes review of the Decision in that time.

I have enclosed a copy of the notice "Issuance of Director's Decision Under 10 CFR 2.206," which contains the complete text of DD-99-08 that is being filed with the Office of the Federal Register for publication.

Sincerely,

Samuel J. Collins, Director
Office of Nuclear Reactor Regulation

Enclosures: 1. Director's Decision DD-99-08
2. Federal Register Notice

cc w/encls: See next page

cc:

Winston & Strawn
1400 L Street, N.W.
Washington, DC 20005-3502

Manager - Licensing
Entergy Operations, Inc.
River Bend Station
P. O. Box 220
St. Francisville, LA 70775

Senior Resident Inspector
P. O. Box 1050
St. Francisville, LA 70775

President of West Feliciana
Police Jury
P. O. Box 1921
St. Francisville, LA 70775

Regional Administrator, Region IV
U.S. Nuclear Regulatory Commission
611 Ryan Plaza Drive, Suite 1000
Arlington, TX 76011

Ms. H. Anne Plettinger
3456 Villa Rose Drive
Baton Rouge, LA 70806

Administrator
Louisiana Radiation Protection Division
P. O. Box 82135
Baton Rouge, LA 70884-2135

Mr. Randall K. Edington
Vice President - Operations
Entergy Operations, Inc.
River Bend Station
P.O. Box 220
St. Francisville, LA 70775

Executive Vice President and
Chief Operating Officer
Entergy Operations, Inc.
P. O. Box 31995
Jackson, MS 39286

General Manager - Plant Operations
Entergy Operations, Inc.
River Bend Station
P. O. Box 220
St. Francisville, LA 70775

Director - Nuclear Safety
Entergy Operations, Inc.
River Bend Station
P. O. Box 220
St. Francisville, LA 70775

Vice President - Operations Support
Entergy Operations, Inc.
P. O. Box 31995
Jackson, MS 39286-1995

Attorney General
State of Louisiana
P. O. Box 94095
Baton Rouge, LA 70804-9095

Wise, Carter, Child & Caraway
P. O. Box 651
Jackson, MS 39205

cc:

Mary E. O'Reilly
FirstEnergy Corporation
76 South Main St.
Akron, OH 44308

Resident Inspector's Office
U.S. Nuclear Regulatory Commission
P.O. Box 331
Perry, OH 44081-0331

Regional Administrator, Region III
U.S. Nuclear Regulatory Commission
801 Warrenville Road
Lisle, IL 60532-4531

Sue Hiatt
OCRE Interim Representative
8275 Munson
Mentor, OH 44060

Henry L. Hegrat
Regulatory Affairs Manager
FirstEnergy Nuclear Operating Company
Perry Nuclear Power Plant
P.O. Box 97, A210
Perry, OH 44081

Lew W. Myers
Vice President - Nuclear, Perry
FirstEnergy Nuclear Operating Company
P.O. Box 97, A200
Perry, OH 44081

Mayor, Village of Perry
P.O. Box 100
Perry, OH 44081-0100

William R. Kanda, Jr., Plant Manager
FirstEnergy Nuclear Operating Company
Perry Nuclear Power Plant
P.O. Box 97, SB306
Perry, OH 44081

James R. Williams
Chief of Staff
Ohio Emergency Management Agency
2855 West Dublin Granville Road
Columbus, OH 43235-2206

Donna Owens, Director
Ohio Department of Commerce
Division of Industrial Compliance
Bureau of Operations & Maintenance
6606 Tussing Road
P.O. Box 4009
Reynoldsburg, OH 43068-9009

Mayor, Village of North Perry
North Perry Village Hall
4778 Lockwood Road
North Perry Village, OH 44081

Radiological Health Program
Ohio Department of Health
P.O. Box 118
Columbus, OH 43266-0118

Ohio Environmental Protection
Agency
DERR--Compliance Unit
ATTN: Mr. Zack A. Clayton
P.O. Box 1049
Columbus, OH 43266-0149

Chairman
Perry Township Board of Trustees
3750 Center Road, Box 65
Perry, OH 44081

State of Ohio
Public Utilities Commission
East Broad Street
Columbus, OH 43266-0573

7590-01-P

U S NUCLEAR REGULATORY COMMISSION

DOCKET NOS. 50-458 AND 50-440

LICENSE NOS. NPF-47 AND NPF-58

ENTERGY OPERATIONS, INC.

FIRSTENERGY NUCLEAR OPERATING COMPANY

NOTICE OF ISSUANCE OF DIRECTOR'S DECISION UNDER 10 CFR 2.206

Notice is hereby given that the Director, Office of Nuclear Reactor Regulation, has issued a Director's Decision with regard to Petitions dated September 25, 1998, and November 9, 1998, filed by Mr. David A Lochbaum on behalf of the Union of Concerned Scientists (UCS), hereinafter referred to as the "Petitioner." The Petitions concern the operation of the River Bend Station (River Bend) located in St. Francisville, Louisiana, and the Perry Nuclear Power Plant (Perry) located in Perry, Ohio.

The Petitions requested that River Bend and Perry should be immediately shut down and their respective operating licenses suspended or modified until the facilities' design and licensing bases were updated to permit operation with failed fuel assemblies, or until all failed fuel assemblies were removed from the reactor core. The Petitioner also requested that a public hearing be held to discuss this matter in the Washington, DC, area.

As the basis for the September 25, 1998, request, the Petitioner raised concerns stemming from the Nuclear Regulatory Commission (NRC) Daily Event Report No. 34815, dated September 21, 1998, whereby Entergy Operations, Inc. (the licensee for River Bend) reported a possible fuel cladding defect. The Petitioner referred to concerns raised in a UCS report of April 2, 1998, regarding nuclear plant operation with fuel cladding leakage. The UCS considers such operation to be potentially unsafe and to be in violation of Federal regulations. In the Petition, a number of references to the River Bend Updated Safety Analysis Report (USAR) were cited that the UCS believes prohibit operation of the facility with known fuel leakage.

The Petition of November 9, 1998, raises concerns originating from the NRC's Weekly Information Report for the week ending October 30, 1998, in which the staff discussed the licensee's findings of possible fuel cladding defects. The Perry Petition also referred to concerns raised in the UCS report of April 2, 1998.

In its report of April 2, 1998, the UCS expresses the opinion that existing design and licensing requirements for nuclear power plants preclude their operation with known fuel cladding leakage. The UCS position is based on the assessment of updated final safety analysis reports (UFSARs or USARs) of four plants, vendor documentation, standard technical specifications, and pertinent NRC correspondence. In addition to recommending that the NRC take steps to prohibit nuclear power plants from operating with fuel cladding damage, the report specifically recommends plant shutdowns upon detection of fuel leakage and that safety evaluations be included in plant licensing bases, which consider the effects of operating with leaking fuel to justify operation under such circumstances.

Finally, the two Petitions also stated that the licensing basis for worker radiation protection was violated whenever the licensee operated the plant with potential fuel cladding failures The Petitions references included various USAR Sections and NRC Information Notice 87-39, "Control of Hot Particle Contamination at Nuclear Plants," and stated that industry experience has demonstrated that reactor operation with failed fuel cladding increased radiation exposures for plant workers.

On February 22, 1999, the NRC conducted an informal public hearing regarding the River Bend Petition as well as a similar petition submitted pursuant to 10 CFR 2.206 involving Perry, operated by the FirstEnergy Nuclear Operating Company. The hearing gave the Petitioner, the licensees, and the public an opportunity to provide additional information and to clarify issues raised in the Petitions.

The Director of the Office of Nuclear Reactor Regulation has determined that the two requests, to require River Bend and Perry to be immediately shut down and their operating licenses suspended or modified until the facilities' design and licensing bases were updated to permit operation with failed fuel assemblies, or until all failed fuel assemblies were removed from the reactor core, be denied. The reasons for this decision are explained in the Director's Decision pursuant to 10 CFR 2.206 (DD-99-08), the complete text of which follows this notice and is available for public inspection at the Commission's Public Document Room, the Gelman Building, 2120 L Street, NW., Washington, DC, and at the local public document rooms located at the Government Documents Department, Louisiana State University, Baton Rouge, Louisiana, and the Perry Public Library, 3753 Main Street, Perry, Ohio.

A copy of the Director's Decision will be filed with the Secretary of the Commission for the Commission's review in accordance with 10 CFR 2.206 of the Commission's regulations. As provided for by this regulation, the Decision will constitute the final action of the Commission 25 days after the date of issuance, unless the Commission, on its own motion, institutes a review of the Decision in that time.

Dated at Rockville, Maryland, this 18th day of April 1999.

FOR THE NUCLEAR REGULATORY COMMISSION

Samuel J. Collins, Director
Office of Nuclear Reactor Regulation

UNITED STATES
NUCLEAR REGULATORY COMMISSION
OFFICE OF NUCLEAR REACTOR REGULATION

Samuel J. Collins, Director

In the Matter of	)	
	)	
ENTERGY GULF STATES, INC.	)	Docket No. 50-458
AND	)	
ENTERGY OPERATIONS, INC.	)	License No. NPF-47
	)	
(River Bend Station, Unit No. 1)	)	
	)	
AND	)	
	)	
FIRSTENERGY NUCLEAR OPERATING COMPANY	)	Docket No. 50-440
	)	
	)	License No. NPF-58
(Perry Nuclear Power Plant, Unit No. 1)	)	
	)	
	)	(10 CFR 2.206)

DIRECTOR'S DECISION UNDER 10 CFR 2.206

I. INTRODUCTION

By Petitions submitted pursuant to 10 CFR 2.206 on September 25, 1998, and November 9, 1998, respectively, Mr. David A. Lochbaum, on behalf of the Union of Concerned Scientists (UCS or Petitioner), requested that the U.S. Nuclear Regulatory Commission (NRC) take immediate action with regard to the River Bend Station (River Bend) and the Perry Nuclear Power Plant (Perry).

In the Petitions, the Petitioner requested that the NRC take immediate enforcement action by suspending the operating license for River Bend and Perry until all leaking fuel rods were removed from the reactor core or until the facilities' design and licensing bases were updated to permit operation with leaking fuel assemblies. Accompanying the Petitions was the

UCS report "Potential Nuclear Safety Hazard—Reactor Operation With Failed Fuel Cladding," dated April 2, 1998. Entergy Operations, Inc. (the River Bend licensee), provided the NRC with its response to its Petition in a letter dated February 11, 1999. FirstEnergy Nuclear Operating Company (the Perry licensee) provided a response to its Petition in a letter also dated February 11, 1999. On February 22, 1999, the NRC held an informal public hearing at which the Petitioner presented information related to the safety concerns in the Petitions. The NRC staff has determined that the information presented in the Petitions and at the informal public hearing did not support the action requested by the Petitioner. The basis for my decision in this matter follows.

II. BACKGROUND

In support of the requests presented in the Petition dated September 25, 1998, the Petitioner raised concerns stemming from NRC Daily Event Report No. 34815, filed on September 21, 1998, in which Entergy Operations, Inc., reported a possible fuel cladding defect at River Bend. The Petitioner repeated the concerns raised in the UCS report of April 2, 1998, regarding nuclear plant operation with fuel cladding leakage. The UCS considers such operation to be potentially unsafe and to be in violation of Federal regulations. In addition, the Petitioner cites instances in the licensing basis for River Bend that it believes prohibit operation of the facility with leaking fuel.

In the November 9, 1998, Petition, the Petitioner raised similar concerns originating from the NRC Weekly Information Report for the week ending October 30, 1998, in which fuel leaks detected at Perry on September 2, 1998, and on October 28, 1998, were discussed. The Petitioner also repeated the concerns raised in the UCS report of April 2, 1998. The matters raised in support of the Petitioner's requests are discussed herein.

III. DISCUSSION

The September 25, 1998, Petition presents safety concerns for River Bend along with the associated generic concerns addressed in the UCS report of April 2, 1998. The plant-specific concerns are based on portions of the River Bend Updated Safety Analysis Report (USAR) cited in the Petition. The November 9, 1998, Petition presents safety concerns for Perry arising essentially from the associated generic concerns addressed in the UCS report of April 2, 1998. The Perry Petition does not reference plant-specific licensing basis documentation.

Since the generic concerns presented in the UCS report bear upon the plant-specific concerns cited in the two Petitions, the staff's evaluation first considers the UCS report and follows with a discussion of the plant-specific concerns.

A. Generic Safety Concerns

In the UCS report of April 2, 1998, UCS expresses the opinion that existing design and licensing requirements for nuclear power plants preclude their operation with known fuel cladding leakage. The UCS position is based on the assessment of updated final safety analysis reports (UFSARs) of four plants, vendor documentation, standard technical specifications, and pertinent NRC correspondence. The report states that the following regulatory and safety concerns exist for plants operating with leaking fuel:

- 10 CFR 50.59, "Changes, tests and experiments," is violated because operation with fuel cladding leakage constitutes an unapproved change to the licensing basis for a plant. The report states that such operation is an unresolved safety question because the criteria of 10 CFR 50.59(a)(2) are satisfied (e.g., probability and consequences of an accident may be increased by operating with leaking fuel).

- 10 CFR 50.71, "Maintenance of records, making of reports," is violated because the licensing basis as documented in the technical specifications and the analyses contained in the UFSAR for the facility do not accommodate operation with leaking fuel.
- Safety analyses for postulated accidents assume intact fuel cladding before the event; therefore, plants with known fuel leakage could have accidents with more severe consequences than predicted as a result of fuel damage. The report further states that no information was available showing that operation with leaking fuel has been previously evaluated.
- 10 CFR 50.34a, "Design objectives for equipment to control releases of radioactive material in effluents—nuclear power reactors," and other regulations related to the as low as is reasonably achievable (ALARA) principle for radioactive materials release are violated since plant workers are exposed to a greater risk than necessary because of higher coolant activity levels attributable to leaking fuel.

In addition to requesting that the NRC take steps to prohibit nuclear power plants from operating with fuel cladding damage, the report specifically requests that plants be shut down upon detection of fuel leakage, and that safety evaluations be included in plant licensing bases that consider the effects of operating with leaking fuel to justify operation under such circumstances.

Before addressing the regulatory concerns raised in the April 1998 UCS report, the following discussion provides background and bases for current NRC guidance and practices with regard to fuel defects.

1. Defense-in-Depth and ALARA Considerations

In order to protect public health and safety from the consequences of potential uncontrolled releases of radioactive fission products resulting from the operation of nuclear power plants, plants are designed with multiple barriers to fission-product release. This traditional "defense-in-depth" philosophy is key to assuring that radiological doses from normal operation and postulated accidents will be acceptably low, as outlined in 10 CFR Part 100, "Reactor Site Criteria." Fuel cladding is integral to the defense-in-depth approach to plant safety, serving as the first barrier to fission-product release.

The premise of the defense-in-depth philosophy with regard to the potential for fission-product release is that plant safety does not rely on a single barrier for protection. In this way, a limited amount of leakage from each of the barriers—the fuel cladding, the reactor coolant system pressure boundary, and the containment—is a design consideration and some leakage from each barrier, within prescribed limits, is acceptable during operation. These limits, defined within the technical specifications, are established as a key component of a plant's design and licensing basis. The leakage associated with fuel cladding defects is accounted for in plant safety analyses, as discussed later in this evaluation under "Safety Analysis Assumptions."

Therefore, to meet its defense-in-depth objectives, fuel is not required to be leak-free. A limited amount of fuel cladding leakage is acceptable during operation since (1) in the event of an accident, other fission-product barriers besides the fuel cladding (i.e., the reactor coolant system pressure boundary and the containment) help prevent uncontrolled releases, (2) limits for reactor coolant system activity, as prescribed in the technical specifications, limit the level of fuel leakage that is permitted so that the release guidelines of 10 CFR Part 100,

"Reactor Site Criteria," will not be exceeded during accidents, and (3) plant design features and operating procedures anticipate leaking fuel and provide means to deal with the effects.

Sources of activity in reactor coolant are fission products released from fuel, corrosion products activated in the reactor during operation, and fission products released from impurities in fuel cladding, tritium produced from the irradiation of water, lithium, and boron. Although reactor operators should strive to maintain low levels of coolant activity from all of these sources, the staff has long recognized that reactor coolant activity cannot be entirely eliminated and that some fission products from leaking fuel could be present (see Standard Review Plan (SRP), NUREG-0800, Section 4.2, "Fuel System Design"). Thus, plant design considerations, such as reactor coolant cleanup systems, shielding, and radwaste controls, have been devised to minimize risk to plant workers from exposure to radiation from reactor coolant. Plants also implement procedures to respond to leaking fuel when leakage is discovered, as was demonstrated by the example of the follow-up actions taken by the River Bend and Perry operators to limit the production of fission products in the vicinity of the leaking fuel rods.

By containing fuel and fission products, cladding also helps maintain radioactive releases to as low a level as is reasonably achievable. As previously stated, the technical specifications contain limits for the maximum level of coolant activity so that the dose guidelines in 10 CFR Part 100 are not exceeded during accidents. These are the maximum levels of activity assumed to exist in the reactor coolant from normal operating activities. The limits on reactor coolant system specific activity are also used for establishing standardization in radiation shielding and procedures for protecting plant personnel from radiation (see Section B3.4.16 of NUREG-1431, "Standard Technical Specifications, Westinghouse Plants"). Thus, they are consistent with NRC regulations requiring licensees to follow an ALARA approach to radiation protection.

The connection between technical specification limits for coolant activity and ALARA requirements is key to demonstrating that limited fuel leakage during operation is consistent with safe plant operation. The ALARA requirement is given in 10 CFR 50.34a and 50.36a. The Statement of Considerations for these NRC regulations (35 FR 18385, December 3, 1970) contains a discussion of the "reasonableness" aspect of the ALARA approach. When the Statement of Considerations was written, the Commission believed that releases of radioactivity in plant effluents were generally within the range of "as low as practicable." The Commission also stated, therein, that "as a result of advances in reactor technology, further reduction of those releases can be achieved." Advances in fuel integrity, design of waste treatment systems, and appropriate procedures were cited as areas in which the plants had taken steps to meet the reasonableness standard. It is important to note that the Commission did not require leak-free fuel as a means to satisfy ALARA requirements. In addition to the physical barriers to the release cited above, other factors, such as radwaste cleanup and plant procedures, provide confidence that fission-product release from the fuel can be controlled so as to prevent undue risks.

Later in the same Statement of Considerations, the Commission acknowledged the need to allow flexibility of plant operation. "Operating flexibility is necessary to take into account some variation in the small quantities of radioactivity, as a result of expected operational occurrences, which may temporarily result in levels of radioactive effluents in excess of the low levels normally released" but still within regulatory limits. The Commission recognized that a balance should be maintained between limiting exposure to the public and plant operational requirements. Therefore, the NRC regulations allow the possibility of increased reactor coolant activity levels that might result from limited fuel cladding leaks, but require the use of plant equipment to maintain control over radioactive materials in gaseous and liquid effluents produced during normal reactor operations, including expected operational occurrences. The

Commission went as far as to define "as low as practicable" (the phrase later replaced with "as low as is reasonably achievable" in 40 FR 19440, May 5, 1975) in terms of the state of technology, the economics of improvements in relation to benefits to public health and safety that could be derived by improved technology and methods of controlling radioactive materials, and "in relation to the utilization of atomic energy in the public interest." This definition appears in Section 50.34a itself, mandating that the Commission maintain the balance between safety and plant operational requirements.

By publishing 10 CFR Part 50, Appendix I, "Numerical Guides for Design Objectives and Limiting Conditions for Operation To Meet the Criterion 'As Low As Is Reasonably Achievable' for Radioactive Material in Light-Water-Cooled Nuclear Power Reactor Effluents," the Commission took steps to provide more definitive guidance for licensees to meet the "as low as practicable" requirement. Appendix I was published as guidance that presented an acceptable method of establishing compliance with the "as low as practicable" requirement of 10 CFR 50.34a and 50.36a. In the Statement of Considerations for Appendix I (40 FR 19439, May 5, 1975), the Commission characterized the guidance as the "quantitative expression of the meaning of the requirement that radioactive material in effluents released to unrestricted areas from light-water nuclear power reactors be kept 'as low as practicable'." The technical basis for Appendix I contained assumptions for a small fraction of leaking fuel rods, as is stated in the Atomic Energy Commission's report of July 1973, WASH-1258, "Final Environmental Statement Concerning Proposed Rule Making Action: Numerical Guides for Design Objectives and Limiting Conditions for Operation To Meet the Criterion 'As Low as Practicable' for Radioactive Material in Light-Water-Cooled Nuclear Power Reactor Effluents."

2. Associated Regulations and Guidance

Fuel integrity is explicitly addressed in NRC regulations in several instances, and plant licensing bases specifically discuss fuel performance limits. To implement NRC regulations, the staff developed a number of guidance documents for licensees to use in developing their licensing basis. This section outlines the regulatory framework on fuel integrity during normal plant operation and discusses instances in which the staff has considered the safety implications of fuel integrity.

a. Regulatory Requirements

The General Design Criteria (GDC) of 10 CFR Part 50, Appendix A, "General Design Criteria for Nuclear Power Plants," contain references to fuel design criteria. When fuel performance is used as a criterion for a safety function, system, or component, the phrase "specified acceptable fuel design limits" (SAFDLs) appears in the following GDC:

- GDC 10, "Reactor Design"
- GDC 12, "Suppression of Reactor Power Oscillations"
- GDC 17, "Electric Power Systems"
- GDC 20, "Protection System Functions"
- GDC 25, "Protection System Requirements for Reactivity Control Malfunctions"
- GDC 26, "Reactivity Control System Redundancy and Capability"
- GDC 33, "Reactor Coolant Makeup"
- GDC 34, "Residual Heat Removal"

GDC 10, 17, 20, and 26 use this wording in conjunction with anticipated operational occurrences and conditions of normal operation. For example, GDC 10 requires "appropriate

margin to assure that specified acceptable fuel design limits are not exceeded during any condition of normal operation, including the effects of anticipated operational occurrences." As discussed later in this section, SAFDLs for a plant are described in plant documentation, typically the UFSAR or the FSAR, and are met by operating within technical specifications limits.

NRC regulations also specify that certain conditions beyond steady-state operation be included in evaluations of the normal operating regime for a plant. These are called anticipated operational occurrences (AOOs) and are sometimes referred to as "anticipated operating transients." In Appendix A to 10 CFR Part 50, the staff defines AOOs as "those conditions of normal operation which are expected to occur one or more times during the life of the nuclear power unit." GDC 29, "Protection Against Anticipated Operational Occurrences," gives a general requirement for protection system and reactivity control system performance during AOOs, but does not mention fuel integrity. Examples of AOOs are the loss of all reactor coolant pumps, turbine trip events, and loss of control power. Such occurrences are distinct from events termed "accidents," such as a loss-of-coolant accident (LOCA) or a main steamline break. The references to fuel integrity requirements related to accidents and those regarding emergency core cooling system (ECCS) performance are beyond conditions of normal operation.

The UCS report relates other regulations beyond the GDC to fuel integrity during normal operation as follows:

- 10 CFR 50.34a, "Design objectives for equipment to control releases of radioactive material in effluents—nuclear power reactors"
- 10 CFR 50.36, "Technical specifications"
- 10 CFR 50.59, "Changes, tests and experiments"

- 10 CFR 50.71, "Maintenance of records, making of reports"
- Appendix I to 10 CFR Part 50, "Numerical Guides for Design Objectives and Limiting Conditions for Operation To Meet the Criterion 'As Low As Is Reasonably Achievable' for Radioactive Material in Light-Water-Cooled Nuclear Power Reactor Effluents"

Although 10 CFR 50.36a, "Technical specifications on effluents from nuclear power reactors," was not directly referenced in the report, by citing 10 CFR 50.36, the staff inferred that Section 50.36a is linked to fuel integrity when considering the discussion on the UCS report.

b. NRC Staff Guidance Documents

To implement NRC regulations, several NRC staff guidance documents are used, including the following:

- Regulatory Guide 1.3, "Assumptions Used for Evaluating the Potential Radiological Consequences of a Loss of Coolant Accident for Boiling Water Reactors"
- Regulatory Guide 1.4, "Assumptions Used for Evaluating the Potential Radiological Consequences of a Loss of Coolant Accident for Pressurized Water Reactors"
- Regulatory Guide 1.77, "Assumptions Used for Evaluating a Control Rod Ejection Accident for Pressurized Water Reactors"
- Regulatory Guide 1.112, "Calculation of Releases of Radioactive Materials in Gaseous and Liquid Effluents From Light-Water-Cooled Power Reactors"
- SRP Section 4.2, "Fuel System Design"
- SRP Section 4.4, "Thermal and Hydraulic Design"

Along with the regulations, licensees use the guidance documents listed above to form the licensing basis for fuel integrity at their plant. The licensing basis for a nuclear power plant, as defined in 10 CFR Part 54, "Requirements for Renewal of Operating Licenses for Nuclear Power Reactors," is "the set of NRC requirements applicable to a specific plant and a licensee's written commitments for ensuring compliance with and operation within applicable NRC requirements and the plant-specific design basis...that are docketed and in effect." The definition continues by listing elements of the licensing basis, such as technical specifications, the FSAR, and licensee commitments documented in NRC safety evaluations. Several components form the plant's licensing basis for fuel performance: (1) NRC regulations that specifically refer to fuel integrity; (2) technical specification limits on coolant activity; (3) fuel rod performance specifications and analysis assumptions defined in the plant's FSAR and referenced topical reports; and (4) commitments to NRC regulatory guidance and to generic communications addressing fuel performance.

Acceptance criteria in the SRP sections, which may be adopted by licensees to implement the regulations, are based on meeting the requirements of GDC 10 with appropriate margin to ensure that SAFDLs are not exceeded during normal operation, including AOOs. Specifically, SRP Section 4.2 has as an objective of the safety review "to provide assurance that the fuel system is not damaged as a result of normal operation and anticipated operational occurrences." The reviewer should ensure that fuel does not leak as a result of specific causes during normal operation and AOOs, and that leaking fuel is accounted for in the dose analyses for postulated design-basis accidents. Further, fuel rod failure is defined in SRP Section 4.2 as "the loss of fuel rod hermiticity," meaning fuel rod leakage. However, in SRP Section 4.2, the staff also states that "it is not possible to avoid all fuel rod failures and that cleanup systems are installed to handle a small number of leaking rods." Such leaks typically occur as a result of

manufacturing flaws or loose parts wear. Therefore, on the basis of this review guidance, the staff accepts the possibility that fuel may leak during normal operation.

In the case of the Calvert Cliffs Nuclear Plant, a plant cited as an example in the UCS report, the plant's licensing basis contains a commitment to adhere to the guidance in the SRP. The following four objectives for fuel design given in SRP Section 4.2 may be used as fuel design objectives within a plant's licensing basis as is done in the Calvert Cliffs FSAR:

- Fuel is not damaged as a result of normal operation and AOOs.
- Fuel damage is never so severe as to prevent control rod insertion when required.
- The number of fuel rod failures is not underestimated for postulated accidents.
- Coolability is always maintained.

SRP Section 4.4 has as an objective that the thermal and hydraulic design of the core should provide acceptable margins of safety from conditions that would lead to fuel damage during normal reactor operation, including anticipated operational transients. It gives two examples of acceptable approaches to meet the acceptance criteria: one based on a 95-percent probability at a 95-percent confidence level that the hottest rod in the core does not exceed prescribed thermal limits during normal operation, including AOOs, and the other using a limiting value for thermal limits so that at least 99.9 percent of the fuel rods are not expected to exceed thermal limits during normal operation, including AOOs. These criteria are limits that strive to maintain a very low likelihood of fuel damage during operation; however, they do not preclude the possibility that some fuel defects could occur.

A plant's licensing basis contains fuel performance criteria that are specified for normal operation, including AOOs, and analyses are conducted to ensure that these criteria will not be exceeded. The criteria are related to the SAFDLs mentioned in the GDC and are normally presented in terms of prescribed thermal limits, which can be calculated and are reliable

predictors of the onset of fuel damage. For boiling-water reactors (BWRs), critical heat flux or the critical power ratio is used as the predictor of fuel damage onset, and for pressurized-water reactors (PWRs), the criterion is the departure from nucleate boiling (DNB), or the DNB ratio (DNBR).

An example of fuel design limits given in plant documentation is found in the FSAR for Calvert Cliffs Units 1 and 2. Section 3.6 of the FSAR presents fuel design and analysis bases. Fuel rod cladding is designed to stress and strain limits, considering the operating temperature, the cladding material, the expected property changes as a result of irradiation, and the predicted life span of the fuel. Extensive fuel mechanical analyses are detailed, along with pertinent fuel test data, which help to confirm the analysis results. The calculations are used to demonstrate that the criteria are satisfied for limiting cases under limiting assumptions. Chapter 14 of the Calvert Cliffs FSAR gives the fuel behavior acceptance criteria for each category of design-basis event analyzed. For AOOs, the minimum DNBR is chosen to provide at least a 95-percent probability with a 95-percent confidence level that DNB will not be experienced along the fuel rod with that DNBR (i.e., the SRP Section 4.4 criteria). This limit ensures that there is a low probability of fuel rod damage as a result of overheated cladding. The fuel temperature SAFDL is set so that no significant fuel melting will occur during steady-state operation or during a transient. Compliance with the limit offers assurance that the fuel rod will not be damaged as a result of material property changes and increases in fuel pellet volume, which could be associated with fuel melting. Again, as with the limits discussed in SRP Section 4.4, these limits are set to prevent fuel damage, but the possibility of fuel leakage is recognized.

The key to plant licensing bases regarding fuel integrity is the technical specification limiting the concentration of activity allowed in reactor coolant during plant operation. These limits are based on maintaining a margin to the dose guidelines in 10 CFR Part 100 for steam

generator tube rupture (SGTR) accidents in PWRs and main steamline break (MSLB) accidents in BWRs. The specific activity limits of the reactor coolant system are stated in terms of dose equivalent iodine-131, which is attributable solely to fuel leaks. That is distinct from gross coolant activity, which is the aggregate activity from all sources, including fuel leaks and corrosion product activation. The technical basis for these limits can be traced to the guidance given in Appendix I, which is, in turn, based on assumptions that fuel leaks would exist during operation. Technical specifications for reactor core safety limits, including the reactor protection system setpoints, are set so that the SAFDLs are not exceeded during normal operation or AOOs. The technical specifications for protection system action are intended to prevent fuel damage, but the specifications for coolant activity levels recognize that some small amount of fuel leakage is allowable during operation. The technical specifications concerning coolant activity are based on meeting the dose acceptance criteria in the SRP for the limiting design-basis accident (usually SGTR or MSLB for PWRs and MSLB for BWRs). These limits are used as assumptions in design-basis accident dose analyses to show compliance with dose acceptance criteria for the control room operators and the public. By maintaining the levels of coolant activity within these limits during normal operation, the continued validity of the design-basis analyses is maintained.

The staff has addressed fuel performance problems in several generic communications to licensees. Prominent among these were NRC Information Notice (IN) 93-82, "Recent Fuel and Core Performance Problems in Operating Reactors," and Generic Letter (GL) 90-02, "Alternative Requirements for Fuel Assemblies in Design Features Section of Technical Specifications." In IN 93-82, the staff discussed fuel leaks occurring during normal operation from a specific cause—fretting wear in PWR fuel, which was partly attributed to mixed fuel core designs. The staff alerted licensees to the introduction of modified fuel designs that requires added attention to ensure that the core design basis is not violated. This information notice is

an example of staff action to use operating information gathered from fuel leaks at a few plants to avoid similar problems at other reactors, thus reducing the potential for more widespread fuel leakage. In GL 90-02, the staff provided licensees with added flexibility to take actions to reduce fission-product releases during operation by removing defective fuel rods during refueling outages.

The staff has previously considered the safety implications of operation with fuel leakage on a generic basis. Generic Safety Issue (GSI) B-22, "LWR [Light Water Reactor] Fuel," which is related to fuel leakage, is discussed in NUREG-0933, "A Prioritization of Generic Safety Issues," Supplement 22, March 1998. In GSI B-22, the staff considered the ability to accurately predict fuel performance under normal and accident conditions. The GSI review was conducted to determine if predictions of fuel behavior under normal operating and accident conditions were sufficient to demonstrate that regulatory requirements were being met. In its evaluation of the issue, the staff concluded that releases during normal operation would be increased because of fuel defects, but would not be increased beyond regulatory limits. The staff also stated that, "additional requirements would not decrease the number of fuel defects significantly." Furthermore, the staff concluded that the release from fuel damaged during design-basis accidents and severe accidents would be much larger than the release attributed to preexisting fuel defects, and the magnitude of the release would not be significantly affected by preexisting fuel defects. Thus, the consequence from leaking fuel was determined to be very small. The staff concluded that because fuel manufacturers have taken an active role to improve fuel performance, fuel leaks are now rare, and the significance of the issue has diminished. Therefore, the issue was dropped from further consideration.

In the resolution of GSI B-22, the staff concluded that the influence of additional restrictions to operation with fuel leaks on core damage frequency and public consequence would be insignificant. Thus, operation with a limited number of fuel defects and leaks under

normal operating conditions is not associated with an excessive level of risk, provided that the plant continues to operate within technical specifications limits for reactor coolant activity.

3. Evaluation of Generic Concerns

The staff evaluated the generic concerns associated with fuel leakage identified previously by the Petitioner, as follows:

a. 10 CFR 50.59, "Changes, tests and experiments"

A premise of the UCS report is that 10 CFR 50.59 is violated because reactor operation with limited fuel leakage constitutes an unapproved change to the licensing basis for a plant. The report states that "Federal regulations require formal NRC approval prior to any nuclear plant operating with fuel cladding failures." The attachment to the report is an assessment of operation with fuel leaks as an unreviewed safety question on the basis of the criteria in 10 CFR 50.59. The report states that such operation is an unreviewed safety question because operation with leaking fuel (1) increases the probability and consequences of an accident, (2) creates an accident different from any in the safety analysis for the plant, and (3) reduces safety margins.

The staff does not agree that operation with leaking fuel necessarily constitutes a change to or violation of the licensing basis for a plant. A small amount of fuel leakage during operation is permitted by NRC staff guidance implementing NRC regulations and is accounted for in plant licensing bases. A key component of the licensing basis regarding fuel performance is the technical specification limiting reactor coolant system activity. The fission-product release from the level of leaking fuel associated with the technical specification limit is included in the design-basis accident dose analyses described in the FSAR for a plant to show compliance with the dose acceptance criteria in the SRP. Therefore, operating with

leaking fuel, within the coolant activity technical specification limits, does not constitute a change in the plant licensing basis, and 10 CFR 50.59 does not apply.

b. 10 CFR 50.71, "Maintenance of records, making of reports"

The Petitioner states in the report that "any plant operating with fuel cladding failures is violating its design and licensing bases requirements, a condition not allowed by Federal safety regulations." The Petitioner further states that when plants operate with leaking fuel, 10 CFR 50.71 is violated since the licensing basis for a plant, as documented in the technical specifications and in the analyses contained in the FSAR, does not accommodate such operation.

This concern is closely linked to the previous discussion regarding 10 CFR 50.59, in that FSARs for plants operating with leaking fuel should, in the view of the UCS, include safety analyses accounting for the effects of fuel leaks. As previously discussed, plant licensing bases do incorporate assumptions for limited levels of fuel leakage through technical specifications requirements and designs for plant reactor water cleanup systems. Plant FSARs, including the example discussed earlier in this evaluation, typically contain information on fuel leakage effects, and the safety analyses explicitly allow for coolant activity levels attributable to leaking fuel under normal operation. Thus, the staff does not consider 10 CFR 50.71 to be violated by operation with fuel leakage.

c. Safety Analysis Assumptions

The UCS report states that "safety analyses assume that <u>all</u> three barriers [to radioactive material release] are intact prior to any accident." Therefore, according to the UCS, plants with known fuel leakage could have accidents with more severe consequences than

predicted. The report also states the following: "Pre-existing fuel cladding failures have not been considered in the safety analyses for this accident [LOCA], or any other accident."

In the discussion that follows, the staff explains that preexisting fuel cladding leaks are accounted for in plant licensing bases and that safety analyses do not assume that all the fission-product barriers are fully intact before an accident.

The analyses of limiting postulated design-basis releases do not assume that all the fission-product barriers are fully intact before an accident. For the loss-of-coolant accident, which typically yields the most limiting postulated releases, all three barriers are assumed to allow the release of some fission products. The methodology used to analyze this accident is given in Regulatory Guides 1.3 and 1.4, and SRP Section 15.6.5, "Loss-of-Coolant Accidents Resulting From Spectrum of Postulated Piping Breaks Within the Reactor Coolant Pressure Boundary."

For the containment and reactor coolant system (RCS) barriers, these assumptions are explicitly given. The containment is assumed to leak at the leak rate incorporated in the plant technical specifications when the containment is at positive pressure. The RCS inside the containment is assumed to completely fail as a fission-product barrier at the beginning of the accident. Systems outside the containment that interface with the RCS are also assumed to experience failures.

The assumption of preexisting leakage for the fuel cladding barrier, although not explicitly given, is inherent in the assumption of a conservative nonmechanistic release from the fuel. The entire iodine and noble gas inventory of the core is assumed to be released to the reactor coolant. A conservative fraction of this inventory is assumed to be released into the containment and subsequently released to the environment. Assuming that this release occurs instantaneously further enhances the conservatism of these analyses. This assumption

disregards the fission-product containment function of the fuel cladding at the beginning of the accident.

Accidents, which may not be bounded by the radiological consequences of a LOCA, include the control rod drop accident for BWRs and MSLB outside of containment for PWRs. However, the conservatism of the source term assumptions for these analyses parallels those for a LOCA. Some of the same assumptions used for radiological consequence evaluation of a LOCA are used for the analysis of MSLB outside of containment. Appendix A to SRP Section 15.1.5, "Radiological Consequences of Main Steam Line Failures Outside Containment of a PWR," contains an acceptance criterion that references Regulatory Guide 1.4. The radiological assumptions for the control rod drop analysis are similar to those for a LOCA, as stated in Appendix A to SRP Section 15.4.9, "Radiological Consequences of Control Rod Drop Accident (BWR)," and Regulatory Guide 1.77. For example, the guidelines assume that the nuclide inventory in the potentially breached fuel elements should be calculated and it should be assumed that all gaseous constituents in the fuel cladding gaps are released.

The radioactivity assumed for release from the LOCA is much greater than that associated with preexisting fuel leakage allowed by plant technical specifications. The staff has compared releases from preexisting defects with the release resulting from fuel damage during an accident. In its consideration of GSI B-22, the staff concluded that, "the magnitude of a release from failed fuel during an accident is much larger than the release from a preexisting fuel defect" and that "the resultant consequence from failed fuel was determined to be very small" (NUREG-0933). These assumptions are made despite the provisions of 10 CFR 50.46 requiring an ECCS that must be designed to prevent exceeding thermal limits that cause such gross fuel failure. In addition, for design-basis accidents in which fuel damage is not assumed, the preexisting fuel cladding defects are typically assumed to serve as release paths facilitating a spike in radioiodine concentration in the coolant.

Additional NRC fuel design requirements complement the conservative defense-in-depth assumptions as previously described to prevent an unanalyzed large release of fission products. To illustrate its concern about fuel leakage influences on accident progression, the UCS report describes a LOCA sequence and postulates that hydraulic loads on the fuel rods could lead to cladding failures, which would result in a large release of fission products into the coolant and prevent control rod insertion. Fuel design requirements and guidance specifically address the ability to insert control rods, and staff review guidance recognizes that preexisting fuel cladding defects could have an effect on fuel performance during accidents. In GDC 27, "Combined Reactivity Control Systems Capability," the staff requires that reactivity control systems, including the control rod system, have the capability to control reactivity changes under postulated accident conditions in order to assure core cooling. SRP Section 4.2 includes the objective that "fuel system damage is never so severe as to prevent control rod insertion when it is required."

To ensure that the preceding objective is met, fuel designs consider external loads on fuel rods. This is discussed in the appendix to SRP Section 4.2, "Evaluation of Fuel Assembly Structural Response to Externally Applied Forces." The basis for much of the appendix to SRP Section 4.2 is contained in NUREG/CR-1018, "Review of LWR Fuel System Mechanical Response With Recommendations for Component Acceptance Criteria," prepared by EG&G Idaho in September 1979. This report states that "Cyclic fatigue and material degradation may cause a failure [of a fuel system component] at any point in the transient [i.e., a LOCA]." Thus, material degradation that could lead to fuel leakage during operation is considered in accident analyses. Furthermore, design considerations, such as control guide tubes in PWRs and fuel channel boxes in BWRs, help separate control rods from the fuel. The separation provided protects control rods from material degradation of fuel that might occur in accidents, thus helping to prevent control rod obstruction. Such safety analysis assumptions as these (which

assume preexisting failures of the fission-product barriers) provide confidence that the preexisting cladding defects allowed by technical specifications limits on coolant activity will not erode the safety margin assumed for accident analyses.

d. 10 CFR 50.34a, "Design objectives for equipment to control releases of radioactive material in effluents—nuclear power reactors"

In its report, the UCS claims that 10 CFR 50.34a and other regulations related to the ALARA principle for radioactive materials release are violated since plant workers are exposed to a greater risk than necessary because of higher coolant activity levels attributable to leaking fuel. The UCS report continues: "Federal regulations require nuclear plant owners to keep the release of radioactive materials as low as reasonably achievable. Therefore, it is both an illegal activity and a serious health hazard for nuclear plants to continue operating with fuel cladding damage." The UCS report cites Appendix I to 10 CFR Part 50 when contending that fuel releases pose an undue risk to plant workers. Appendix I contains the numerical dose guidelines for power reactor operation to meet the ALARA criterion. These dose values are a small fraction of the 10 CFR Part 20 annual public dose limit of 100 millirem (i.e., 3 millirem from liquid effluents and 5 millirem from gaseous effluents).

The bases for the guidelines in Appendix I are given in WASH-1258, which acknowledges that radioactive material from a number of sources, including fission-product leakage to the coolant from defects in the fuel cladding, will be present in the primary coolant during normal operation. Further, in the "Bases" section on RCS specific activity in NUREG-1431, "Standard Technical Specifications, Westinghouse Plants," April 1995, the limits on specific activity are linked to exposure control practices at plants. The section clearly states that the limits on RCS specific activity are used in the design of radiation shielding and plant personnel radiation protection practices.

In addition, occupational dose considerations were discussed in the resolution of GSI B-22. The staff acknowledged that localized dose rates were expected to increase as a result of fuel defects, but effects are limited by requirements for plants to operate within their technical specifications for coolant activity and releases. In some cases, plants will often stay within allowable release limits and coolant activity levels by operating at reduced power until the next refueling outage allows the problem to be corrected.

On the basis of the preceding discussion, operation with a limited amount of leaking fuel is within a plant's licensing basis and, in itself, does not violate ALARA-related regulations. Operation involving leaking fuel, however, will likely require plant operators to take additional measures in order to ensure that ALARA requirements are being met, but these would need to be considered on a case-by-case basis.

4. UCS Report Recommendations

In the report, the UCS recommends that the NRC take steps to prohibit nuclear power plants from operating with fuel cladding damage until the safety concerns raised by the report are resolved. The following steps are specifically recommended: (1) requiring plant shutdown upon detection of fuel leakage, and (2) requiring that safety evaluations that consider the effects of operating with leaking fuel be included in plant licensing bases to justify operation under such circumstances. Further, the UCS recommends that UFSARs be revised to establish safe operating limits to accommodate operation with leaking fuel.

On the basis of the staff's consideration of the stated safety concerns in the report, there is no technical or regulatory basis to require that plants operating with leaking fuel be shut down, provided they are operating within their technical specifications limits and in accordance with their licensing basis. The UCS report, in raising its concerns, does not offer any new

information to demonstrate that the overall risk of operating with fuel defects presents an undue hazard to plant workers or the public.

Further, since the staff does not consider plants operating with leaking fuel to be violating 10 CFR 50.59 or 50.71, there is no basis for requiring plants to perform additional safety analyses to model the effects of fuel defects on accident progressions to update plant safety analysis documentation.

B. Plant-Specific Concerns - River Bend Station

On the basis of the reported fuel leakage at River Bend, the Petitioner states that the generic concerns contained in its report apply to River Bend. The September 25, 1998, Petition then presents a number of references to the River Bend USAR as instances in which, in the opinion of the Petitioner, plant licensing bases do not permit operation of the plant with known fuel leakage.

A reference to the USAR in the Petition is the USAR definition of unacceptable consequences (USAR Table 15A.2-4), which lists as an unacceptable consequence "Failure of the fuel barrier as a result of exceeding mechanical or thermal limits." The Petitioner considers this criterion violated since a fuel failure exists in advance of any design-basis accident that may now occur.

The Petition then discusses USAR Chapter 15 accident analysis descriptions, which state either (1) that fuel cladding integrity will be maintained as designed or (2) radioactive material is not released from the fuel for the event. The following events cited in the Petition have event descriptions in the River Bend USAR, which state that fuel cladding will function and maintain its integrity as designed:

- Loss of Feedwater Heating (USAR Section 15.1.1.4)

- Feedwater Controller Failure—Maximum Demand (USAR Section 15.1.2.4)
- Pressure Regulator Failure—Open (USAR Section 15.1.3.4)
- Pressure Regulator Failure—Closed (USAR Section 15.2.1.4)

The following two events cited in the Petition have event descriptions in the River Bend USAR, which state that "no radioactive material is released from the fuel" during the event:

- Control Rod Withdrawal Error at Power (USAR Section 15.4.2.5)
- Recirculation Flow Control Failure with Increasing Flow (USAR Section 15.4.5.5)

The Petitioner also states that the River Bend licensing basis for worker radiation protection is violated by operation with leaking fuel. Again, the Petition cites the USAR (Sections 12.1.1 and 12.1.2.1) as the pertinent reference to the licensing basis.

Evaluation of Plant-Specific Concerns

As discussed in the consideration of generic safety concerns, the staff does not agree that preexisting fuel cladding defects and resultant fuel leakage violate plant licensing bases. The staff also considers that conclusion valid for River Bend. The basis for this conclusion is supported in the following discussion.

a. USAR Appendix 15A

The Petitioner referenced two sections of USAR Appendix 15A, "Plant Nuclear Safety Operational Analysis (NSOA)" (as stated):

UFSAR 15A.2.8, "General Nuclear Safety Operational Criteria," stated:

> The plant shall be operated so as to avoid unacceptable consequences.

UFSAR Table 15A.2-4, "Unacceptable Consequences Criteria Plant Event Category: Design Basis Accidents," defined 'unacceptable consequences' as follows:

4-1 Radioactive material release exceeding the guideline values of 10CFR100.
4-2 Failure of the fuel barrier as a result of exceeding mechanical or thermal limits.
4-3 Nuclear system stresses exceeding that allowed for accidents by applicable industry codes.
4-4 Containment stresses exceeding that allowed for accidents by applicable industry codes when containment is required.
4-5 Overexposure to radiation of plant main control room personnel.

The current operating condition at the River Bend Station apparently violates the spirit, if not the letter, of Criterion 4-2 since the fuel barrier has already failed, albeit to a limited extent. This UFSAR text does not accept a low level of fuel barrier failure based on meeting the offsite and onsite radiation protection limits. Integrity of the fuel barrier is an explicit criterion in addition to the radiation requirements.

In the Petition, the UCS highlights the table concerning the consequences for the design-basis accident. This plant condition is a highly improbable event, and safety analyses ensure that safety limits and regulatory requirements are not exceeded as a result of the accident occurring. This is why USAR Table 15A.2-4, Item 4-2 states, "Failure of a fuel barrier as a result of exceeding mechanical or thermal limits" (emphasis added). The unacceptable consequences of this type of event are independent of preexisting fuel cladding defects. The unacceptable consequences of this event are additional fuel failures as a result of the accident occurring.

Within the framework of the USAR, "unacceptable consequences" are specified measures of safety and analytically determinable limits on the consequences of different classifications of plant events. They are used for performing a nuclear safety operational analysis. Unacceptable consequences are described for various plant conditions, including "Normal (Planned) Operation," "Anticipated (Expected) Operational Transients," "Abnormal

(Unexpected) Operational Transients," "Design Basis (Postulated) Accidents," and "Special (Hypothetical) Events." USAR Tables 15A.2-1 through 15A.2-5 identify the unacceptable consequences for each of the five plant conditions, and are different for each of the cases.

The USAR text clearly documents the acceptability of a low level of fuel cladding failures based on meeting the offsite and onsite radiation protection limits. For example, USAR Table 15A.2-1 discusses the unacceptable consequences for normal operation. This USAR table defines unacceptable consequences for normal operation as follows:

4-1 Release of radioactive material to the environs that exceeds the limits of either 10 CFR Part 20 or 10 CFR Part 50.

4-2 Fuel failure to such an extent that were the freed fission products released to the environs via the normal discharge paths for radioactive material, the limits of 10 CFR Part 20 would be exceeded.

4-3 Nuclear system stress in excess of that allowed for planned operation by applicable industry codes.

4-4 Existence of a plant condition not considered by plant safety analysis.

Item 4-2 in Table 15A.2-1 implies that fuel cladding failures are not an unanticipated condition during normal operations and is, therefore, consistent with other parts of the River Bend licensing-basis. Fuel cladding defects are acceptable to the extent that they do not jeopardize radiation protection limits established in the plant technical specifications and other licensing-basis documents. USAR Table 15A.2-4 does not apply for normal operations; only USAR Table 15A.2-1 applies. Furthermore, the provisions found in USAR Table 15A.2-4 would continue to be met for postulated design-basis accidents.

USAR Section 15.0.3.1.1 provides further clarification in its list of unacceptable safety consequences for "moderate frequency" events, which lists: "Reactor operation induced

fuel-cladding failure as a direct result of the transient analysis above the minimum critical power ratio (MCPR) uncertainty level (0.1 percent)." Accordingly, preexisting cladding defects are considered during some postulated transients. In fact, the acceptance criteria for moderate-frequency event analyses, based on the GDC (10 CFR Part 50, Appendix A) and the Standard Review Plan, and described in the Safety Evaluation Report (SER) for River Bend (NUREG-0989), state the following expectations for fuel cladding performance: "An incident of moderate frequency...should not result in a loss of function of any fission product barrier other than the fuel cladding. A limited number of fuel rod cladding perforations are acceptable."

USAR Chapter 11, "Radioactive Waste Management," Section 11.1, "Source Terms," details the expected reactor coolant and main steam activities to be used to form the basis for estimating the average quantity of radioactive material released to the environment during normal operations, including operational occurrences. This section further addresses that the offgas release rate of 304,000 μCi/sec at a 30-minute delay time corresponds to design failed fuel conditions, that is, maximum acceptable cladding failure for normal operation, and is also conservatively based upon 105 percent of rated thermal power. This is consistent with limits prescribed in Technical Specification 3.7.4, "Main Condenser Offgas," which requires that the gross gamma activity rate of the noble gases shall be <290 mCi/sec (or <290,000 μCi/sec) after a decay time of 30 minutes.

In addition, two other parts of the fuel system licensing basis for River Bend show that limited fuel leakage during plant operation is a design consideration:

The fuel system design basis for River Bend is given in USAR Section 4.2.1 by reference to the generic topical report "General Electric Standard Application for Reactor Fuel," NEDE-24011-P-A. The generic topical report details fuel cladding operating limits to ensure that fuel performance is maintained within fuel rod thermal and mechanical design and safety analysis criteria. The limits are given for normal operating conditions and AOOs in terms of

specific mechanical and thermal specifications. Evaluations of specific fuel failure mechanisms under normal operation and AOOs were discussed, such as stress/strain, hydraulic loads, fretting, and internal gas pressure to ensure that fuel failure did not result from these causes. The design basis did not preclude the possibility that fuel could fail for other reasons, such as preexisting cladding flaws leading to leakage.

The Technical Specifications (Section 3.4.8) for River Bend contain a limit for reactor coolant system specific activity. The basis for this limit is the same as that discussed in the consideration of the generic safety concerns. Section B 3.4.8 of the River Bend Technical Specifications "Bases" acknowledges that "the reactor coolant acquires radioactive materials due to release of fission products from fuel leaks." Thus, fission products released during plant operation are clearly considered to be contributors to the source term used for safety analysis of the MSLB release consequences. The Technical Specifications state that the limit is set to ensure that any release as a consequence of an MSLB is less than a small fraction of the 10 CFR Part 100 guidelines. These portions of the River Bend licensing basis are consistent with NRC regulations regarding fuel performance and the associated NRC guidance used by licensees to implement those NRC regulations that were covered earlier in the discussion regarding generic concerns.

The River Bend licensing-basis items listed by the Petitioner are consistent with the parts of the fuel licensing basis discussed above with the exception of some minor inconsistencies in documentation (as discussed below). That is, fuel leakage during plant operation is not precluded by licensing-basis provisions requiring that fuel integrity be maintained as designed. The design basis itself allows the possibility of leakage while ensuring that cladding damage does not result from specific operationally related causes. Fuel is also designed to maintain its structural integrity to ensure core coolability and to ensure that control rods can be inserted.

b. Chapter 15 Accident Analysis

The Petitioner also cited references taken from accident analyses described in River Bend USAR Chapter 15 (as stated):

> UCS reviewed the UFSAR Chapter 15 description of accident analyses performed for the River Bend Station. UFSAR Section 15.1.1.4, "Barrier Performance," for the loss of feedwater heating event stated:
>
> > The consequences of this event do not result in any temperature or pressure transient in excess of the criteria for which the fuel, pressure vessel, or containment are designed; therefore, these barriers maintain their integrity and function as designed.
>
> UFSAR Sections 15.1.2.4 for the feedwater controller failure - maximum event, 15.1.3.4 for the pressure regulator failure - open event, and 15.2.1.4 for the pressure regulator failure - closed event all contain comparable statements that barrier performance was not performed because the fuel remained intact.
>
> These analyzed events appear to be valid only when the River Bend Station is operated with no failed fuel assemblies. Operation with pre-existing fuel failures (i.e., the current plant configuration) appear to be outside of the design and licensing bases for these design bases events.
>
> UFSAR Section 15.4.2.5, "Radiological Consequences," for the control rod withdrawal error at power event stated:
>
> > An evaluation of the radiological consequences was not made for this event since no radioactive material is released from the fuel.
>
> UFSAR Section 15.4.5.5, "Radiological Consequences," for the recirculation flow control failure with increasing flow event stated:
>
> > An evaluation of the radiological consequences is not required for this event since no radioactive material is released from the fuel.
>
> These analyzed events also appear valid only when the River Bend Station is operated with no failed fuel assemblies. Operation with pre-existing fuel failures (i.e., the current plant configuration) appear to be outside of the design and licensing bases for these design bases events.
>
> The effect from pre-existing fuel failures was considered, at least partially, for one design bases event. UFSAR Section 15.2.4.5.1, "Fission Product Release from Fuel," for the main steam isolation valve closure event stated:

> While no fuel rods are damaged as a consequence of this event, fission product activity associated with normal coolant activity levels as well as that released from previously defective rods is released to the suppression pool as a consequence of SRV [safety relief valve] actuation and vessel depressurization.

> The aforementioned design bases events (e.g., control rod withdrawal error at power, loss of feedwater heating, et al) are not bound by these results because the radioactive material is not "scrubbed" by the suppression pool water as it is in the MSIV [main steam isolation valve] closure event.

As previously stated, the Petitioner cited four references to the USAR accident analysis section entitled "Barrier Performance." At issue are essentially equivalent statements made where the USAR stated, in part, that the defense-in-depth "barriers maintain their integrity and function as designed." The UCS concluded that operation with preexisting fuel failures is, therefore, outside the River Bend design and licensing bases. In stating that barriers are "maintained," the USAR clearly implies that the events themselves do not result in additional fuel cladding failures. To further support this conclusion, the radiological consequences described for three of the four events (Section 15.1.2, "Feedwater Controller Failure—Maximum Demand"; Section 15.1.3, "Pressure Regulator Failure—Open"; and Section 15.2.1, "Pressure Regulator Failure—Closed") are, indeed, bounded by an event that takes into consideration the effects of preexisting cladding failures. The three preceding events all result in actuation of the safety relief valves (SRVs) to the suppression pool. The USAR discussion (see USAR section titled "Radiological Consequences") notes that radioactivity is discharged to the suppression pool, and that the activity discharged is much less than those consequences identified in USAR Section 15.2.4.5 (for the MSIV closure event).

The MSIV closure event, as described in the USAR, clearly considers the activity released from "previously defective rods" in determining dose consequences. The source term used in these calculations assumes the same iodine and noble gas activity as an initial condition as is used in the basis for determining RCS activity technical specifications limits.

USAR Section 15.2.4.5.1, "Fission Product Release from Fuel," also explains, "Since each of those transients identified previously which cause SRV actuation results in various vessel depressurization and steam blowdown rates, the transient evaluated in this section [the MSIV closure event] is that one which maximizes the radiological consequences for all transients of this nature." Thus, the USAR explicitly describes how "the aforementioned design-basis events" are bounded by the results for the MSIV closure event, for those events resulting in an SRV actuation. Furthermore, USAR Section 15.1.1.5 describing the fourth event, the loss of feedwater heating, also states that "this event does not result in any additional fuel failures," further reinforcing the staff's position.

The quotation taken from the control rod withdrawal error from power and recirculation flow control error event descriptions—"[a]n evaluation of the radiological consequences was not made for this event since no radioactive material is released from the fuel"—appears to be taken out of context. Considering the many references ostensibly permitting operation with preexisting fuel cladding failures found within the USAR, technical specifications, NRC regulations, staff implementing guidelines, and other licensing-basis documents, the intent of this statement is clearly that no additional radioactive material is released from the fuel as a consequence of the event.

Finally, in each of the accident analysis cases listed in the Petition, the event is classified as a "moderate frequency" event (or an "anticipated operational transient"). Specific criteria for unacceptable consequences are delineated in USAR Table 15A.2-2. For this type of anticipated transient, unacceptable performance of the fuel is described as, "[r]eactor operation induced fuel cladding failure as a direct result of the transient analysis above the MCPR [Minimum Critical Power Ratio] uncertainty level (0.1%)" (emphasis added). Therefore, fuel cladding defects existing before the accident are not precluded from consideration.

c. Fuel Cladding Defect Propagation

The Petition then raised concerns regarding the possibility that preexisting fuel cladding defects could propagate under design-basis transients (as stated):

> As detailed in UCS's April 1998 report on reactor operation with failed fuel cladding, it has not been demonstrated that the effects from design basis transients and accidents (i.e., hydrodynamic loads, fuel enthalpy changes, etc.) prevent pre-existing fuel failures from propagating. It is therefore possible that significantly more radioactive material will be released to the reactor coolant system during a transient or accident than that experienced during steady state operation. Thus, the existing design bases accident analyses for River Bend Station do not bound its current operation with known fuel cladding failures.

As previously stated in the evaluation of generic issues raised by the April 1998 UCS report, the staff has previously considered the safety implications of operation with fuel leakage on a generic basis. In GSI B-22, the staff considered the ability to accurately predict fuel performance under normal and accident conditions. In its evaluation of the issue, the staff concluded that releases during normal operation would be increased because of fuel defects, but would not be increased beyond regulatory limits. The staff also concluded that the release from fuel damage during design-basis accidents and severe accidents would be much larger than the release attributed to preexisting fuel defects, and the magnitude of the release would not be significantly affected by preexisting fuel defects. Therefore, the consequence from leaking fuel was determined to be very small.

The Petitioner has, however, noted some apparent inconsistencies in documentation of the licensing basis as found in the USAR for River Bend that could be taken out of context. The statements cited for two events—the control rod withdrawal error from power and recirculation flow control error—are not consistent with the other parts of the River Bend licensing basis discussed in this evaluation. The technical basis for coolant activity limits clearly permits operation with a limited amount of fuel leakage and, as discussed, the design basis does not preclude the possibility of limited fuel leakage during operation. Therefore, although these

events should not cause fuel damage, preexisting leakage could still be a consideration, and only the activity in the reactor system coolant up to the technical specification limit would be available for release. The MSLB is considered the limiting event with respect to release of coolant activity from leaking fuel. The staff expects that the consequences of the MSLB would bound those that would be predicted for the control rod withdrawal error from power or the recirculation flow control error events. Thus, the minor discrepancies uncovered by the Petitioner in the documentation of the plant licensing basis do not constitute a safety concern requiring NRC action.

The licensee has taken actions to limit the effects of the minor fuel rod defects at River Bend reported on September 21, 1998. The control rod pattern has been altered to achieve a depressed flux profile in the vicinity of the leaking rods, thereby suppressing the production of fission products as the plant continues operation at slightly less than full power. Following the initial detection of a leaking rod, the licensee reduced the activity in the pretreatment offgas sample from 22.5 mCi/sec to 1.8 mCi/sec, which was very close to the prefuel-leak level of 1 mCi/sec. The peak value was never more than a small fraction of the technical specification limit of 290 mCi/sec. The offgas treatment system has been effectively eliminating any detectable radioactivity in offgas effluent, and only small dose rate increases were observed in areas of the plant in which offgas system components are located. Since work is not normally performed in those areas, the licensee did not institute any additional exposure controls. However, the licensee is continuing to closely monitor the offgas system to ensure that the coolant activity concentration remains within technical specifications limits.

d. ALARA Concerns

The Petitioner further stated that Entergy Operations, Inc., was violating its licensing basis with regard to the ALARA worker protection program (as stated):

In addition to operating with non-bounding design bases accident analyses, it appears that the River Bend licensee is also violating its licensing basis for worker radiation protection. UFSAR Section 12.1.1, "Policy Consideration," stated:

> The purpose of the ALARA [as low as reasonably achievable] program is to maintain the radiation exposure of plant personnel as far below the regulatory limits as is reasonably achievable.

UFSAR Section 12.1.2.1, "General Design Considerations for ALARA Exposures," stated that River Bend's efforts to maintain in-plant radiation exposure as low as is reasonably achievable included:

> Minimizing radiation levels in routinely occupied plant areas and in vicinity of plant equipment expected to require the attention of plant personnel.

According to the NRC Information Notice No. 87-39, "Control of Hot Particle Contamination at Nuclear Plants:"

> A plant operating with 0.125 percent pin-hole fuel cladding defects showed a five-fold increase in whole-body radiation exposure rates in some areas of the plant when compared to a sister plant with high-integrity fuel (<0.01 percent leakers). Around certain plant systems the degraded fuel may elevate radiation exposure even more.

Industry experience demonstrated that reactor operation with failed fuel cladding increased radiation exposures for plant workers. The River Bend licensee has a licensing basis requirement to maintain radiation exposures for plant workers as low as is reasonably achievable. The River Bend licensee informed the NRC about potential fuel cladding failures. It could shut down the facility and remove the failed fuel assemblies from the reactor core. Instead, it continues to operate the facility with higher radiation levels.

In its letter to the NRC dated February 11, 1999, the River Bend licensee stated that if the plant were to shut down solely to remove leaking fuel bundles, worker exposure would be increased since additional exposure would later be incurred for normal shutdown and maintenance activities. Also, during the February 22, 1999, informal public hearing on the Petition, the River Bend licensee stated that dose rates in the general plant areas are essentially unchanged and that the average daily dose to plant workers has remained at the historical level of approximately 0.14 person-rem per day during normal operations. River Bend has seen some increased levels in dose rates in isolated areas, such as in rooms containing

offgas system equipment; however, these areas are not routinely occupied and access to the rooms are controlled by the health physics department. The licensee stated that if a 14-day outage were conducted to remove defective fuel bundles, the outage would incur a worker dose on the order of 9 person-rem for reactor disassembly, reassembly, and refueling activities. This exposure would be in addition to that incurred from activities planned for the scheduled refueling outage. The licensee contends that shutting down in this situation to replace leaking fuel would be an action contrary to ALARA. The staff agrees that conducting plant shutdown only to address the current situation at River Bend would be contrary to the ALARA principle for plant workers, provided exposure levels remain at their current values.

River Bend has two independent radiation-detection systems capable of sensing fission-product release from leaking fuel rods—main steam line radiation monitors and offgas system radiation monitors. The main steam line radiation monitors are used to detect high radiation levels from gross fuel failure. The offgas system radiation monitors can detect low-level emissions of noble gases, which are indicative of minor fuel damage. The offgas system monitor indication signaled the recent fuel damage found at River Bend.

The actions taken by the licensee to limit further fuel damage, as well as the continued attention to reactor coolant activity and offgas radiation levels, provide confidence that River Bend can continue safe operation, within its licensing basis, with the limited fuel leakage recently detected.

C. Plant-Specific Concerns - Perry Nuclear Power Plant

On the basis of the reported fuel leakage at Perry, the Petitioner states that the generic concerns contained in the UCS report apply to the Perry plant. In the opinion of the Petitioner, plant licensing bases do not permit operation of the plant with known fuel leakage.

As discussed in the consideration of generic safety concerns, the staff does not agree that pre-existing fuel cladding defects and resultant fuel leakage violate plant licensing bases. The staff also considers that conclusion valid for Perry. Fuel leakage during plant operation is not precluded by licensing basis provisions requiring that fuel integrity be maintained as designed. The Perry design basis itself allows the possibility of leakage while ensuring that cladding damage does not result because of specific operationally related causes. Fuel is also designed to maintain its structural integrity to ensure core coolability and to ensure that control rods can be inserted.

The Updated Safety Analysis report (USAR) for Perry contains unacceptable consequences criteria for different event categories (USAR Tables 15A.2-1 through 15A.2-4). The unacceptable consequences for normal operation do not preclude fuel leakage. The second criterion listed precludes fuel failure to the extent that the limits of 10 CFR Part 20 would be exceeded. The unacceptable consequences for anticipated operational transients prohibit fuel failure predicted as a direct result of transient analysis. For abnormal transients and design- basis accidents, widespread fuel cladding perforations and fuel cladding fragmentation are prohibited.

Two parts of the fuel system licensing basis for Perry show that limited fuel leakage during plant operation is a design consideration. The fuel system design basis for Perry is given in the USAR Section 15B by reference to the generic topical report "General Electric Standard Application for Reactor Fuel," NEDE-24011-P-A. The generic topical report details fuel cladding operating limits to ensure that fuel performance is maintained within fuel rod thermal and mechanical design and safety analysis criteria. The limits are given for normal operating conditions and AOOs in terms of specific mechanical and thermal specifications. Evaluations of specific fuel failure mechanisms under normal operation and AOOs were discussed, such as stress and strain, hydraulic loads, fretting, and internal gas pressure, to ensure that fuel failure did not result from these causes. The design bases did not preclude the

possibility that fuel failure could occur for other reasons, such as pre-existing cladding flaws leading to leakage.

The Technical Specifications for Perry (Section 3.4.8) contain a limit for RCS specific activity. The basis for this limit is the same as that discussed in the consideration of the generic safety concerns. Section B3.4.8 of the Perry Technical Specification "Bases" acknowledges that "the reactor coolant acquires radioactive materials due to release of fission products from fuel leaks." Thus, fission products released during plant operation are clearly considered to be contributors to the source term used for safety analysis of the main steamline break release consequences. The technical specifications state that the limit is set to ensure that any release as a consequence of a main steamline break is less than a small fraction of the 10 CFR Part 100 guidelines. These portions of the Perry licensing basis are consistent with NRC regulations regarding fuel performance and the associated NRC guidance used by licensees to implement those NRC regulations that were covered earlier in the discussion regarding generic concerns.

The licensee has taken actions to limit the effects of the existing minor fuel leaks at Perry. The control rod pattern has been altered to achieve a depressed flux profile in the vicinity of the leaking rods, thereby suppressing the production of fission products as the plant continues operation. The off-gas treatment system has been effectively eliminating radioactivity in off-gas effluent, and there has been no change in general radiation area dose rates. However, the licensee is continuing to closely monitor the off-gas system pre-treatment radiation levels and is ensuring that the coolant activity concentration remains within technical specifications limits.

Perry has two independent radiation detection systems capable of sensing fission product release from leaking fuel rods: main steamline radiation monitors and off-gas system radiation monitors. The main steamline radiation monitors are used to detect high radiation levels from gross fuel failure. The off-gas system radiation monitors can detect low-level emissions of noble gases, which are indicative of minor fuel damage.

In its letter to the NRC dated February 11, 1999, the Perry licensee stated that if the plant were to shut down solely to remove fuel bundles exhibiting leakage, plant worker exposure would be increased since additional exposure would later be incurred for normal shutdown and maintenance activities. The licensee contends that shutting down in this situation to replace leaking fuel would be an action contrary to ALARA. The staff agrees that conducting plant shutdown only to address the current situation at Perry would be contrary to the ALARA principle for plant workers, provided exposure levels remain at their current values.

The actions taken by the licensee to limit further fuel damage, as well as the continued attention to reactor coolant activity and off-gas radiation levels, provide confidence that Perry can continue safe operation, within its licensing basis, with the limited fuel leakage detected.

IV. CONCLUSION

The Petitioner's requests are denied for the reasons specified in the preceding sections that discuss the Petitioner's information supporting the request. The Petitioner did not submit any significant new information about safety issues. Neither the information presented in the Petition nor any other subsequent information of which the NRC is aware warrants the actions requested by the Petitioner.

A copy of this Director's Decision will be filed with the Secretary of the Commission for review in accordance with 10 CFR 2.206(c). This Decision will become the final action of the Commission 25 days after its issuance unless the Commission, on its own motion, institutes a review of the Decision within that time.

FOR THE NUCLEAR REGULATORY COMMISSION

Samuel J. Collins, Director
Office of Nuclear Reactor Regulation

Dated at Rockville, Maryland,
this 18th day of April 1999.

UNION OF
CONCERNED
SCIENTISTS

September 25, 1998

Mr. L. Joseph Callan
Executive Director for Operations
United States Nuclear Regulatory Commission
Washington, DC 20555-0001

SUBJECT: PETITION PURSUANT TO 10 CFR 2.206, RIVER BEND STATION

Dear Mr. Callan:

The Union of Concerned Scientists submits this petition pursuant to 10 CFR 2.206 requesting that the River Bend Station be immediately shut down and its operating license suspended or modified until such time that the facility's design and licensing bases are properly updated to permit operation with failed fuel assemblies or until all failed fuel assemblies are removed from the reactor core.

Background

On April 2, 1998, UCS provided the Nuclear Regulatory Commission with a copy of our report titled "Potential Nuclear Safety Hazard / Reactor Operation with Failed Fuel Cladding." We concluded:

> UCS considers nuclear plants operating with fuel cladding failures to be potentially unsafe and to be violating federal regulations.

NRC Daily Event Report No. 34815 dated September 21, 1998, provided the following information about an event notification received from the River Bend Station licensee:

> The licensee notified the Louisiana Department of Environmental Quality of a possible defect in fuel cladding. The notification is required by plant procedures. The possible clad defect was identified by the offgas pretreatment radiation monitor. The monitor is located upstream of offgas treatment equipment and indicated a small increase from 80 to 100 millirem per hour followed by a subsequent rise to about 300 millirem per hour. The level since then has been slowly decreasing.
>
> There has been no measurable increase in radioactive releases from the plant and radioactive releases remain well below the limits of the technical requirements manual and 10CFR20. Plant personnel are implementing site procedures to address the issue and taking appropriate actions.

On September 22, 1998, UCS reviewed the latest Updated Final Safety Analysis Report (UFSAR) available in the NRC's Public Document Room and confirmed that the generic concerns documented in our April 1998 report appear to apply to the River Bend Station.

Washington Office: 1616 P Street NW Suite 310 • Washington DC 20036-1495 • 202-332-0900 • FAX: 202-332-0905
Cambridge Headquarters: Two Brattle Square • Cambridge MA 02238-9105 • 617-547-5552 • FAX: 617-864-9405
California Office: 2397 Shattuck Avenue Suite 203 • Berkeley CA 94704-1567 • 510-843-1872 • FAX: 510-843-3785

UFSAR Section 15A.2.8, "General Nuclear Safety Operational Criteria," stated:

> The plant shall be operated so as to avoid unacceptable consequences.

UFSAR Table 15A.2-4, "Unacceptable Consequences Criteria Plant Event Category: Design Basis Accidents," defined 'unacceptable consequences' as follows:

- 4-1 Radioactive material release exceeding the guideline values of 10CFR100.
- 4-2 Failure of the fuel barrier as a result of exceeding mechanical or thermal limits.
- 4-3 Nuclear system stresses exceeding that allowed for accidents by applicable industry codes.
- 4-4 Containment stresses exceeding that allowed for accidents by applicable industry codes when containment is required.
- 4-5 Overexposure to radiation of plant main control room personnel.

The current operating condition at the River Bend Station apparently violates the spirit, if not the letter, of Criterion 4-2 since the fuel barrier has already failed, albeit to a limited extent. This UFSAR text does not accept a low level of fuel barrier failure based on meeting the offsite and onsite radiation protection limits. Integrity of the fuel barrier is an explicit criterion in addition to the radiation requirements.

UCS reviewed the UFSAR Chapter 15 description of accident analyses performed for the River Bend Station. UFSAR Section 15.1.1.4, "Barrier Performance," for the loss of feedwater heating event stated:

> The consequences of this event do not result in any temperature or pressure transient in excess of the criteria for which the fuel, pressure vessel, or containment are designed; therefore, these barriers maintain their integrity and function as designed.

UFSAR Sections 15.1.2.4 for the feedwater controller failure – maximum event, 15.1.3.4 for the pressure regulator failure – open event, and 15.2.1.4 for the pressure regulator failure – closed event all contain comparable statements that barrier performance was not performed because the fuel remained intact.

These analyzed events appear to be valid only when the River Bend Station is operated with no failed fuel assemblies. Operation with pre-existing fuel failures (i.e., the current plant configuration) appear to be outside of the design and licensing bases for these design bases events.

UFSAR Section 15.4.2.5, "Radiological Consequences," for the control rod withdrawal error at power event stated:

> An evaluation of the radiological consequences was not made for this event since no radioactive material is released from the fuel.

UFSAR Section 15.4.5.5, "Radiological Consequences," for the recirculation flow control failure with increasing flow event stated:

> An evaluation of the radiological consequences is not required for this event since no radioactive material is released from the fuel.

These analyzed events also appear valid only when the River Bend Station is operated with no failed fuel assemblies. Operation with pre-existing fuel failures (i.e., the current plant configuration) appear to be outside of the design and licensing bases for these design bases events.

The effect from pre-existing fuel failures was considered, at least partially, for one design bases event. UFSAR Section 15.2.4.5.1, "Fission Product Release from Fuel," for the main steam isolation valve closure event stated:

> While no fuel rods are damaged as a consequence of this event, fission product activity associated with normal coolant activity levels as well as that released from previously defective rods is released to the suppression pool as a consequence of SRV [safety relief valve] actuation and vessel depressurization.

The aforementioned design bases events (e.g., control rod withdrawal error at power, loss of feedwater heating, et al) are not bound by these results because the radioactive material is not "scrubbed" by the suppression pool water as it is in the MSIV closure event.

As detailed in UCS's April 1998 report on reactor operation with failed fuel cladding, it has not been demonstrated that the effects from design bases transients and accidents (i.e., hydrodynamic loads, fuel enthalpy changes, etc.) prevent pre-existing fuel failures from propagating. It is therefore possible that significantly more radioactive material will be released to the reactor coolant system during a transient or accident than that experienced during steady state operation. Thus, the existing design bases accident analyses for River Bend Station do not bound its current operation with known fuel cladding failures.

In addition to operating with non-bounding design bases accident analyses, it appears that the River Bend licensee is also violating its licensing basis for worker radiation protection. UFSAR Section 12.1.1, "Policy Consideration," stated:

> The purpose of the ALARA [as low as is reasonably achievable] program is to maintain the radiation exposure of plant personnel as far below the regulatory limits as is reasonably achievable.

UFSAR Section 12.1.2.1, "General Design Considerations for ALARA Exposures," stated that River Bend's efforts to maintain in-plant radiation exposure as low as is reasonably achievable included:

> Minimizing radiation levels in routinely occupied plant areas and in vicinity of plant equipment expected to require the attention of plant personnel.

According to NRC Information Notice No. 87-39, "Control of Hot Particle Contamination at Nuclear Plants:"

> A plant operating with 0.125 percent pin-hole fuel cladding defects showed a five-fold increase in whole-body radiation exposure rates in some areas of the plant when compared to a sister plant with high-integrity fuel (<0.01 percent leakers). Around certain plant systems the degraded fuel may elevate radiation exposure rates even more.

Industry experience demonstrated that reactor operation with failed fuel cladding increased radiation exposures for plant workers. The River Bend licensee has a licensing basis requirement to maintain radiation exposures for plant workers as low as is reasonably achievable. The River Bend licensee informed the NRC about potential fuel cladding failures. It could shut down the facility and remove the failed fuel assemblies from the reactor core. Instead, it continues to operate the facility with higher radiation levels.

Since it appears that operation with one or more failed fuel assemblies is not permitted by its design and licensing bases, River Bend must be immediately shut down. The facility must remain shut down until:

- The River Bend licensee removes the failed fuel assemblies from the reactor core.

– OR –

- The River Bend licensee properly updates the plant's design and licensing bases to permit the plant to operate with known fuel damage.

Basis for Requested Action

UCS is a non-profit, public-interest organization with sponsors across the United States, including Louisiana. UCS monitors performance at nuclear power plants in the United States against safety regulations promulgated by the NRC to protect the public and plant workers. When real or potential erosion of mandated safety margins is detected, as is currently indicated at this time at River Bend, UCS engages the NRC, the media, and other authorities to resolve the safety concerns.

Requested Actions

UCS petitions the NRC to require the River Bend Station to be immediately shut down and that the facility remain shut down until all of the failed fuel assemblies are removed from the reactor core. Alternatively, the plant could be restarted after its design and licensing bases were properly updated to reflect continued operation with failed fuel assemblies.

UCS respectfully requests a hearing on this petition to present new information on reactor operation with failed fuel assemblies. This new information will include, but is not limited to, a discussion of the April 1998 UCS report and the plant-specific information regarding River Bend. While our concerns apply to River Bend, we respectfully request that this hearing be held in the DC area since the issue affects all operating nuclear power plants.

Sincerely,

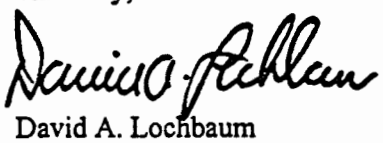

David A. Lochbaum
Nuclear Safety Engineer

enclosure: "Potential Nuclear Safety Hazard / Reactor Operation with Failed Fuel Cladding," April 22, 1998

UNION OF
CONCERNED
SCIENTISTS

Potential Nuclear Safety Hazard
Reactor Operation with Failed Fuel Cladding

The Union of Concerned Scientists has identified a potential safety hazard at nuclear power plants that operate with small cracks and holes in the metal tubing, also called cladding, containing their fuel. The fuel cladding is a vital barrier between highly radioactive materials and the environment. From a review of available documentation, UCS concludes that federal regulations require this barrier to be intact during plant operation. There is a good reason for these regulations – the public cannot be harmed as long as the fuel cladding remains intact. If it is not intact, radioactivity will be released to the plant and the environment. Such a release could affect the health of plant workers and members of the public. In addition, fuel rods with degraded cladding may break apart during an accident and prevent safety equipment from functioning. Despite these potentially serious consequences, nuclear plants routinely operate with defective fuel cladding. In fact, many, if not all, nuclear plants have operated with damaged fuel cladding.

UCS recommends that the Nuclear Regulatory Commission (NRC) enforce federal regulations which prohibit nuclear plants from operating with defective fuel cladding. These regulations allow the NRC to permit nuclear plants to operate with defective fuel cladding, but only when their owners establish acceptable boundaries based on studies of both normal operating and accident conditions. Until these safety concerns are resolved, UCS considers nuclear plants operating with fuel cladding failures to be potentially unsafe and to be violating federal regulations.

Background

The following sections discuss: design and licensing bases requirements for nuclear plants; their specific application to nuclear fuel design; the use of multiple barriers in protecting the public; the role of the fuel cladding as a barrier; the experience with fuel cladding failures, and the potential safety hazards from fuel cladding failures.

Design and Licensing Bases Requirements

Design and licensing bases requirements establish safe operating boundaries which are supported by extensive safety analyses. Operating within the boundaries provides reasonable assurance that the public will be protected if there is an accident. The safety or danger of operating outside the boundaries has not been analyzed. As a result, safety margins may be compromised when boundaries are crossed, increasing the risk to the public. Therefore, federal regulations do not permit plants to operate in unanalyzed conditions.

Fuel Design

Nuclear plant are powered by fuel rods which contain uranium dioxide pellets roughly the size and shape of a large pencil eraser stacked within 12 to 14 feet long metal tubes sealed at each

Washington Office: 1616 P Street NW Suite 310 • Washington DC 20036-1495 • 202-332-0900 • FAX: 202-332-0905
Cambridge Headquarters: Two Brattle Square • Cambridge MA 02238-9105 • 617-547-5552 • FAX: 617-864-9405
California Office: 2397 Shattuck Avenue Suite 203 • Berkeley CA 94704-1567 • 510-843-1872 • FAX: 510-843-3785

end with welded metal caps.[1] A simplified drawing of a fuel rod is shown in Figure 1. The fuel tubes are also called the fuel cladding. Fuel cladding is like the gas tank in a car – if the tank is breached, highly volatile gasoline can spill out to threaten the safety of its passengers and innocent bystanders, as well as degrading the environment. When fuel cladding is breached, highly radioactive material spills out to threaten the safety of plant workers and the public.

All operating US nuclear power plants use fuel assemblies containing square arrays of fuel rods. A typical fuel assembly is illustrated in Figure 2. As shown in this figure, the fuel rods must remain intact to provide the overall structural integrity of the fuel assemblies. The fuel design bases ensure that "the fuel is not damaged as a result of normal operation and anticipated operational occurrences." [2] The phrase "not damaged," as used by both the NRC and nuclear plant owners, means that the fuel rods are not damaged to the point where they would fail.[3] Thus, the fuel design bases includes the explicit requirement that fuel cladding remains intact during normal operation.

Defense-in-Depth Barriers

The splitting, or fissioning, of uranium atoms in the fuel rods releases energy that heats water – nuclear energy that powers the plant. Byproducts of the fission process include radioactive gases and solids. Plutonium is also produced by the nuclear reactions. These radioactive materials emit gamma rays along with alpha and beta particles which can cause damage to the human body. The fuel cladding keeps the radioactive materials contained. If the cladding is defective, radioactive materials will leak into the water which surrounds the cladding and keeps the fuel rods cooled. This water is contained within the reactor vessel and the piping connected to it, which form a second barrier to contain the radioactive materials. If the piping fails, contaminated water spills into the reactor containment building. The reactor vessel and its piping are located within a reactor containment building which forms a third barrier. Because the reactor containment building is not leak tight, it reduces, but does not eliminate, the possibility that radioactive material would escape. Figure 3 shows a simplified drawing of these three barriers.

Three barriers between the radioactive material and the environment imply that one barrier can be breached during plant operation leaving two intact barriers to protect the public. However, the safety analyses assume that all three barriers are intact prior to any accident. Let's assume the rupture of a pipe connected to the reactor vessel breaches one of the barriers. If the pipe rupture occurs when the fuel cladding is defective, then two of the barriers are breached. The remaining barrier, the reactor containment building, only reduces the amount of radioactive material released to the environment. Thus, all three barriers must be intact during plant operation for the public to be protected.

---

[1] Baltimore Gas & Electric Company, Calvert Cliffs Nuclear Plant Updated Final Safety Analysis Report, Section 3.3.2.1, "Fuel Rod Mechanical Design," and General Electric Company, "Licensing Topical Report / General Electric Standard Application for Reactor Fuel," NEDO-24011-A-4, January 1982.

[2] Nuclear Regulatory Commission, NUREG-0800, Standard Review Plan, Section 4.2, Fuel System Design.

[3] Nuclear Regulatory Commission, NUREG-0800, Standard Review Plan, Section 4.2, Fuel System Design, and GPU Nuclear Corporation, Oyster Creek Nuclear Generating Station Updated Final Safety Analysis Report, Section 4.4.2, "Description of Thermal and Hydraulic Design of the Reactor Core."

Potential Nuclear Safety Hazard
Reactor Operation with Failed Fuel Cladding

The fuel cladding is the most important of the three barriers. If the fuel cladding remains intact, the other two barriers can completely fail and the public will still be protected. The intact fuel cladding contains the radioactive gases and solids and prevents them from being released to the atmosphere. The public cannot be harmed from a nuclear plant accident in which the fuel cladding remains intact. But, as the next section indicates, nuclear plants routinely operate with this vital barrier seriously degraded.

Fuel Cladding Failure Experience

Numerous fuel cladding failures from various causes have been reported over the years. For example, the water flowing through the reactor core has caused fuel rods to sway back and forth. In this situation, the fuel rods vibrate against the grid (shown in Figure 2) and damage the cladding. At other plants, debris in the reactor water, such as metal flakes from rusted piping, has lodged against the grid. The friction from the vibration of this debris damaged the cladding. Another failure mode results when fuel pellets expand faster than the fuel rod cladding (see Figure 1) as their temperatures increase. The expanding pellets stretch the cladding, sometimes until it cracks or splits. Finally, the welds holding the upper and lower end plugs to the fuel rod cladding (see Figure 1) have sometimes been defective, causing pinhole leaks or even cracks to form. Other failure modes have been experienced too. Many, if not all, nuclear plants have experienced fuel cladding failures during their lifetimes. Few plants have shut down early to remove failed fuel rods.

Leaking fuel rods are detected by increased radioactivity levels in the reactor vessel's liquid and gaseous releases.[4] Not surprisingly, the radioactivity levels rise significantly when fuel cladding fails. The causes of fuel cladding failures cannot be determined until the plant is shut down and the leaking fuel rods examined.

The following reports illustrate recent fuel cladding failure incidents and include some serious events.

The Vermont Yankee plant recently operated with at least one failed fuel rod for many months.[5] Its owners elected to operate with the leaker(s) until the plant's next scheduled refueling outage in the spring of 1998 rather than incur the cost of an unscheduled shut down.[6] The Brunswick Unit 1 plant in North Carolina operated during 1997 with fuel cladding failures that its owners tolerated.[7] The Surry plant in Virginia also operated in 1997 with failed fuel cladding.[8] These incidents demonstrate that nuclear plants continue to operate with fuel cladding failures.

---

[4] Entergy Operations, River Bend Station Updated Final Safety Analysis Report, Section 4.2.4.2, "Online Fuel System Monitoring," and Section 11.5.2.2.1, "Main Steam Line Radiation Monitoring System."

[5] Nuclear Regulatory Commission, Daily Event Report, DER No. 33152, October 28, 1997.

[6] Vermont Yankee Nuclear Power Corporation, Presentation to Vermont State Nuclear Advisory Panel, December 3, 1997.

[7] Johan Blok and Roger Asay, Centec XXI, "Pinpoint fuel leaks to improve nuclear economics," *Power*, January/February 1998.

Potential Nuclear Safety Hazard
Reactor Operation with Failed Fuel Cladding

A few years ago, the owner of the Point Beach Nuclear Plant in Wisconsin reported a significant event in which "The fuel cladding was failed to the extent that fuel pellets could be seen through the hole in the clad. However, no pellets escaped from the rod." The fuel rod failure was detected when the radioactivity levels of the reactor water rose to a level that was "10 percent of that allowed by [Point Beach Nuclear Plant's operating license]."[9] In other words, the plant's operating license would have allowed it to remain running with up to nine other similarly failed fuel rods. This event suggests that the restrictions on reactor water radioactivity levels are too high to prevent operation with gaping holes in fuel rod cladding.

At the Palisades plant in Michigan, three portions of a broken fuel rod were discovered in different parts of the reactor. One segment, nearly 5½ feet long, was missing about one-third of its fuel pellets. A second segment, 4½ feet long, and a third segment, 1½ feet long, appeared to contain all their fuel pellets.[10] This event is disturbing because it highlights how fragile the cladding can become during normal operation. At Palisades, this fuel rod literally fell apart as it was being removed from the reactor core and radioactive material was lost, including highly toxic plutonium.

Fuel Cladding Failure Consequences

What is the safety threat from a nuclear plant operating with fuel cladding failures? The fact that many plants have operated for many years with failed fuel cladding could be taken to imply an acceptable safety record. However, that is not the case. That fact demonstrates, at most, that the public is protected with fuel cladding failures during normal plant operation. It does not provide any reason to believe that the public will be protected in the event of an accident. It also does not provide any reason to believe that nuclear workers will be protected during normal plant operation with failed fuel cladding.

What might happen if a nuclear plant with failed fuel cladding had an accident? A common accident scenario involves breaking a large pipe connected to the reactor vessel. Water and steam rush out of the reactor vessel through the broken pipe. The water flow in the reactor core, instead of flowing from the bottoms of the fuel assemblies to their tops, may flow across the fuel assemblies. This cross-flow 'pushes' the fuel rods to the side rather than towards the top. Cladding that is weakened may fail under this side force. The plant's response to the pipe break is to shut down. Control rods are automatically inserted into the reactor core to stop the fissioning process. Fuel rods which fail and shift out of their vertical alignment may prevent the insertion of control rods. The safety analyses assume that the control rods can be inserted and shut down the reactor. Can fuel cladding failures cause such problems during this accident scenario? No one knows. Pre-existing fuel cladding failures have not been considered in the

---

[8] Nuclear Regulatory Commission, Inspection Report 50-280/97-10, December 15, 1997.

[9] Wisconsin Electric Power Company, Licensee Event Report No. 85-002-01, "Failed Fuel Rod in Assembly H14, Point Beach Nuclear Plant Unit 1," May 19, 1986.

[10] United States Nuclear Regulatory Commission, Information Notice 93-82, "Recent Fuel And Core Performance Problems In Operating Reactors," October 12, 1993.

safety analyses for this accident or any other accident. Yet, nuclear plants routinely operate with such fuel cladding failures.

What happens if fuel cladding failures increase the severity of nuclear plant accidents? Since plant safety analyses assume that fuel cladding is undamaged when accidents occur, the failures may cause more radioactivity to be released to the environment than has been previously considered. After all, a key barrier confining this highly radioactive material is already breached when the accident begins. Under no circumstances will less radioactivity be released. Thus, it is imperative from a public health standpoint that nuclear plants do not operate with fuel cladding failures unless safety analyses are performed which demonstrate that the consequences from accidents under these conditions are acceptable.

Summary

The fuel cladding is the most important of the three barriers between highly radioactive material and the environment. As long as the fuel cladding remains intact, no nuclear plant accident can threaten public health and safety. Yet, nuclear plants routinely operate with damaged fuel cladding.

Safety analyses assume that the fuel cladding is intact when accident scenarios begin. Operation with pre-existing fuel cladding failures may mean that a nuclear accident will have more severe consequences than predicted by the invalidated safety analyses. Thus, UCS considers a nuclear plant operating with defective fuel cladding to represent an increased risk to the public.

The fuel design bases require the fuel cladding to remain intact during normal plant operation. Federal safety regulations require that plants operate within the boundaries established by their design bases. Therefore, UCS concludes that operating a nuclear plant with failed fuel cladding violates federal safety regulations.

See Attachment 1 for details of UCS's assessment of reactor operation with failed fuel cladding.

ALARA Issue

Nuclear plant owners are required by federal regulations to keep the release of radioactive materials "as low as reasonably achievable" (ALARA).[11] According to the NRC, "a plant operating with 0.125 percent pin-hole fuel cladding defects showed a general five-fold increase in whole-body radiation exposure rates in some areas of the plant when compared to a sister plant with high-integrity fuel (<0.01 percent leakers). Around certain plant systems the degraded fuel may elevate radiation exposure rates even more."[12] The "sister plants" were virtually identical because they were built at the same time by the same owner on the same site. The

[11] Title 10 of the Code of Federal Regulations, Sections 50.34a, "Design objectives for equipment to control releases of radioactive material in effluents – nuclear power reactors," and 50.36, "Technical specifications," and Title 10 of the Code of Federal Regulations, Part 50, Appendix I, "Numerical Guides for Design Objectives and Limiting Conditions for Operation to Meet the Criterion "As Low As Reasonably Achievable" for Radioactive Material in Light-Water-Cooled Nuclear Power Reactor Effluents."

[12] United States Nuclear Regulatory Commission, Information Notice No. 87-39, "Control Of Hot Particle Contamination At Nuclear plants," August 21, 1987.

significant variation in radiation exposure rates is not due to thicker concrete or other design differences – it is due to the failed fuel cladding. UCS is troubled by this NRC evidence because it shows a significantly increased risk to nuclear plant workers at a facility operating with just 0.125 percent fuel cladding failures. Many plants consider it permissible to operate with eight times as many fuel cladding failures (up to 1.0% failures).

Fuel cladding defects release radioactive materials into the reactor water. The water carries them to all parts of the plant, contaminating equipment throughout the facility. Workers conducting equipment inspections and maintenance receive higher radiation exposures. Indeed, some plant workers have received radiation doses far greater than allowed by federal regulations from highly radioactive material released through fuel cladding defects.[13]

It is a well-documented fact that plant operation with defective fuel cladding significantly increases personnel exposures. Federal regulations requires nuclear plant owners to keep the release of radioactive materials as low as reasonably achievable. Therefore, it is both an illegal activity and a serious health hazard for nuclear plants to continue operating with fuel cladding damage.

Conclusions And Recommendations

Conclusions

It is UCS's considered opinion that existing design and licensing requirements do not allow plants to operate with known fuel cladding failures. In addition, federal regulations require formal NRC approval prior to any nuclear plant operating with fuel cladding failures. Such approval has neither been sought nor granted.

UCS's evaluation (see attachment 1) suggests that both the probability and consequences of postulated accidents may be increased when nuclear plants operate with pre-existing fuel cladding failures. Thus, operation with fuel cladding failures is a violation of federal regulations which represents a potential threat to public health and safety.

UCS's assessment was generic. Consequently, this conclusion does not explicitly apply to any operating plant. However, UCS's assessment identified the strong potential for operation with fuel cladding failures to be an illegal activity unless the plant's owners performed a plant-specific safety evaluation which established such operation as acceptable and the NRC has formally reviewed and approved this safety evaluation. Absent both of these conditions, it seems highly probable that any plant operating with fuel cladding failures is violating its design and licensing bases requirements, a condition not allowed by federal safety regulations. It further appears that such illegal operation may have serious safety implications. Finally, operation with fuel cladding damage also seems to violate the ALARA concept mandated by federal regulations, thus exposing plant workers to undue risk.

[13] United States Nuclear Regulatory Commission, Information Notice No. 87-39, "Control Of Hot Particle Contamination At Nuclear plants," August 21, 1987.

Potential Nuclear Safety Hazard
Reactor Operation with Failed Fuel Cladding

UCS's research for this assessment did not locate any information which suggests that operation with failed fuel cladding has been previously evaluated pursuant to federal regulations. There is considerable documentation on fuel cladding failure events, on inspections of failed fuel rods, and on various fuel damage mechanisms. Despite extensive, focused efforts, UCS was unable to find any indication that the safety implications of plant operation with failed fuel cladding have been considered by the fuel vendors, the NRC, or nuclear plant owners. This non-existent data further reinforces UCS's conclusions that operation with failed fuel cladding has not been properly analyzed by the industry, has not been approved by the NRC, and is both potentially unsafe and illegal.

Recommendations

UCS recommends that the Nuclear Regulatory Commission take appropriate steps to prohibit nuclear power plants from operating with fuel cladding damage until the safety concerns raised in this report are resolved. These appropriate steps include, but are not limited to, the following:

- Plant owners should be required to shut down their facilities upon detection of a fuel cladding failure. The plants must not restart until the failed fuel rods are removed.

- Plant owners should be required to evaluate the safety implications of operating with failed fuel cladding in accordance with federal regulations. If these safety evaluations are unable to justify continued operation, the plants should be shut down.

For the long term resolution of the safety concerns raised in this report, UCS recommends that the Updated Final Safety Analysis Reports (UFSARs) be revised. These revisions would establish safe boundaries for operation. After these boundaries are drawn and incorporated into the UFSARs, plants could continue to operate with failed fuel cladding as long as the failures remained within the previously analyzed region. If the amount of failed fuel cladding exceeded the boundaries, then the plant should face the options recommended above.

Attachment 1
Unreviewed Safety Question Assessment

Unreviewed Safety Question Assessment

This attachment contains UCS's evaluation for reactor operation with failed fuel cladding. Our evaluation applied federal regulations for determining when a proposed mode of operation crosses the plant's authorized boundaries and thus requires prior NRC approval. As the results clearly indicate, reactor operation with failed fuel cladding requires NRC approval. Yet, such approval has neither been sought nor granted.

The NRC issues an operating license for a nuclear power plant after reviewing its design and procedures. The plant's owners may modify the facility and revise its procedures as long as the changes do not alter the bases for the NRC's approval of the operating license. A change which alters the operating license bases is called an unreviewed safety question (USQ). For example, a proposed change that reduces the plant's safety margin is an unreviewed safety question because the NRC may have relied on the greater margin in granting the plant's operating license. Likewise, a proposed change that maintains the existing safety margin but does so by operator actions instead of automatic equipment operation is also an USQ because the NRC's approval may have relied on the automatic protective features. When a proposed change involves an USQ, NRC approval must be obtained in advance. Federal regulations specify that a proposed change involves an USQ if:

(1) the probability of occurrence or the consequences of an accident or malfunction of equipment important to safety previously evaluated in the safety analysis report may be increased; or
(2) a possibility for an accident or malfunction of a different type than any evaluated previously in the safety analysis report may be created; or
(3) the margin of safety as defined in the basis for any technical specification is reduced.[14]

Federal regulations require nuclear plant owners to obtain NRC permission prior to conducting any activity for which the answer to one or more of these questions is anything but "NO." As UCS's nuclear safety engineer, I reviewed publicly available documentation to determine if these criteria are satisfied for plants operating with fuel cladding failures. Prior to joining UCS, I worked in the nuclear industry for over 17 years where I developed, reviewed, and assessed literally thousands of USQ determinations.

I divided the first criterion above into the "probability" and "consequences" elements for clarity. The scope of this evaluation was limited to four types of documentation: 1) the Updated Final Safety Analysis Reports (UFSARs) for four of UCS's focus plants (the Calvert Cliffs plant in Maryland, the Oyster Creek plant in New Jersey, the River Bend plant in Louisiana, and the Millstone Unit 3 plant in Connecticut); 2) the non-proprietary version of the fuel design topical report submitted by a vendor (General Electric); 3) the standard technical specifications prepared by all four reactor manufacturers (Westinghouse, General Electric, Babcock & Wilcox, and

[14] Title 10, "Energy," of the Code of Federal Regulations, Section 50.59, "Changes, tests and experiments,"

Combustion Engineering); and 4) NRC correspondence on fuel cladding failure events. The results from this evaluation follow.

- Criterion 1a: May the probability of occurrence of an accident or malfunction of equipment important to safety previously evaluated in the safety analysis report be increased by operation with failed fuel cladding?

The standard technical specifications prepared by Westinghouse, General Electric, Combustion Engineering, and Babcock & Wilcox (vendors for all of the plants operating in the United States) specify that "The fuel cladding must not sustain damage as a result of normal operation."[15] The NRC considers fuel cladding to be damaged when its integrity is lost.[16] The detection of fission products *outside* the fuel rods is irrefutable evidence that fuel cladding integrity has been lost.

The standard technical specifications are the templates from which individual plant operating licenses were derived. Since these specifications establish zero defects as the minimally acceptable standard, operation with fuel cladding failures increases the probability of "malfunction of equipment important to safety," namely the fuel itself, to 100%. For this reason alone, the answer to this question is YES.

To apply the above generic assessment to a specific plant, UCS looked at available documentation for the Oyster Creek Nuclear Generating Station in New Jersey. A design basis for Oyster Creek is "to ensure that no fuel damage will occur in normal operation or operational transients caused by reasonable expected single operator error or equipment malfunction."[17] Fuel rod damage "is defined as a perforation of the cladding which would permit the release of fission product to the reactor coolant."[18] Thus, the detection of failed fuel rod(s) at Oyster Creek would be an equipment malfunction placing the plant outside its design basis. Again, the answer to this question is YES.

A fuel cladding defect may allow gases within a fuel rod to leak out. A defect may also allow water to leak in. It appears that leakage in either direction may also increase the probability that the fuel cladding will not perform its necessary safety function.

---

[15] Babcock & Wilcox Company, Standard Technical Specifications, Section B 2.1.1., "Reactor Core SLs," Combustion Engineering, Standard Technical Specifications, Section B 2.1.1, "Reactor Core SLs," General Electric Company, BWR/4 Standard Technical Specifications, Section B 2.1.1, "Reactor Core SLs," and Westinghouse Electric Corporation, Standard Technical Specifications, Section B 2.1.1, "Reactor Core SLs."

[16] Nuclear Regulatory Commission, NUREG-0800, Standard Review Plan, Section 4.2, "Fuel System Design."

[17] GPU Nuclear Corporation, Oyster Creek Nuclear Generating Station Updated Final Safety Analysis Report, Section 4.4.1, "[Thermal and Hydraulic Design] Design Basis."

[18] GPU Nuclear Corporation, Oyster Creek Nuclear Generating Station Updated Final Safety Analysis Report, Section 4.4.2, "Description of Thermal and Hydraulic Design of the Reactor Core."

A fuel cladding defect which allows gases to leak out of a fuel rod has at least two potentially adverse consequences. The fuel rods are pressurized with helium during their fabrication to minimize a problem called cladding creep-collapse. The pressure inside a nuclear plant ranges from 960 to 2,100 pounds per square inch at full power. The difference between a fuel rod's external pressure and internal pressure can exert sufficient inward force to cause the cladding to fill the gaps between fuel pellets.[19] The stress on the cladding can cause it to break. The leakage of helium from a fuel rod reduces its internal pressure, thus potentially increasing the probability of fuel rod damage from cladding creep-collapse.

Inadequate cooling of the fuel is another potential consequence from gases leaking out of a fuel rod. Helium is used to pressurize fuel rods because of its high thermal conductivity.[20] The leakage of helium through a fuel cladding defect may slow down the transfer of heat from the fuel to the water. When heat cannot be dissipated from the fuel as quickly as assumed, the fuel temperature will increase and may reach the point at which it begins to melt. The leakage of helium from a fuel rod may reduce heat transfer rates, thus potentially increasing the probability that the fuel is seriously damaged during a loss-of-coolant accident.

A fuel cladding defect which allows water to leak into a fuel rod also has at least two potentially adverse consequences. During plant operation, high fuel temperatures prevent water from leaking in through a cladding defect. However, water can enter defects when the plant is shut down and cause fuel rods to become waterlogged. If the plant increases power quickly, the rising fuel temperature may cause the water inside the fuel rods to evaporate and perhaps even boil. The water vapor and steam produced inside the fuel rods, unless it is able to leak out through the defects, increase their pressure. This pressure buildup is suspected to have caused the "bursting" of fuel rods at the Point Beach plant in Wisconsin. Sections of the cladding and several fuel pellets could not be located when the damaged assemblies were later inspected.[21]

There is another potential adverse consequence from water leaking into fuel rods. The high operating temperature dissociates the water into hydrogen and oxygen gases. The hydrogen gas interacts with the cladding to form blisters. The blisters embrittle the cladding, leading to perforations.[22] To minimize the moisture content, the fuel pellets are dried prior to being loaded

[19] Baltimore Gas & Electric Company, Calvert Cliffs Nuclear Plant Updated Final Safety Analysis Report, Section 3.7.1.1.a, "Clad Creepdown/Creep-Collapse."

[20] Baltimore Gas & Electric Company, Calvert Cliffs Nuclear Plant Updated Final Safety Analysis Report, Section 3.3.2.1, "Fuel Rod Mechanical Design."

[21] B. Siegel, Nuclear Regulatory Commission, "Evaluation of the Behavior of Waterlogged Fuel Rod Failures in LWRs," NUREG-0303, March 1978.

[22] Baltimore Gas & Electric Company, Calvert Cliffs Nuclear Plant Updated Final Safety Analysis Report, Section 3.7.2.1, "Burnable Poison Rod Design Evaluation."

into the fuel rods.[23] Thus, water leaking into a fuel rod may increase the probability that fuel cladding suffers this type of damage, which is called hydriding.

In fact, failure propagation due to hydriding has already been identified. Recent inspections of failed fuel rods at the Salem plant in New Jersey, the Beaver Valley plant in Pennsylvania, and the Wolf Creek plant in Kansas revealed that, "In some of the affected assemblies, secondary hydriding also was evident."[24] A fuel rod at the Perry Nuclear plant in Ohio experienced a cladding crack measuring 20 inches long, or nearly 13% of the fuel rod's length, caused by secondary hydriding.[25] In these events, the initial fuel cladding failures were caused by other mechanisms. These failures later propagated due to hydriding.

Thus, operation with fuel cladding failures has the potential for increasing the probability that an important barrier protecting the public, namely the fuel cladding itself, fails to adequately confine radioactive materials during a postulated accident. The fuel cladding is considered "equipment important to safety." A fuel cladding failure is therefore a malfunction of equipment important to safety. For this reason, too, the answer to this criterion is YES.

Finally, the NRC's Standard Review Plan states that the fuel design bases ensure that "fuel damage is never so severe as to prevent control rod insertion when it is required." [26] Nuclear plant operation with failed fuel cladding has caused individual fuel rods to break into segments during fuel handling evolutions. If degraded fuel cladding were to similarly break during an accident, the fuel rod segments might interfere with control rod insertion. Thus, for this additional reason, the answer to this criterion is YES.

- Criterion 1b: May the consequences of an accident or malfunction of equipment important to safety previously evaluated in the safety analysis report be increased by operation with failed fuel cladding?

The NRC reported that the nuclear fuel's design bases are intended to "provide assurance that the fuel system is not damaged as a result of normal operation. 'Not damaged,' as used in the above statement, means that fuel rods do not fail. Fuel rod failure is defined as the loss of fuel rod [integrity]."[27] Thus, the fuel system, including the fuel cladding, must remain undamaged during normal operation.

---

[23] Baltimore Gas & Electric Company, Calvert Cliffs Nuclear Plant Updated Final Safety Analysis Report, Section 3.3.2.1, "Fuel Rod Mechanical Design, and Nuclear Regulatory Commission, NUREG-0800, Standard Review Plan, Section 4.2, "Fuel System Design."

[24] United States Nuclear Regulatory Commission, Information Notice 93-82, "Recent Fuel And Core Performance Problems In Operating Reactors," October 12, 1993.

[25] United States Nuclear Regulatory Commission, Information Notice 93-82, "Recent Fuel And Core Performance Problems In Operating Reactors," October 12, 1993.

[26] Nuclear Regulatory Commission, NUREG-0800, Standard Review Plan, Section 4.2, Fuel System Design.

[27] Nuclear Regulatory Commission, NUREG-0800, Standard Review Plan, Section 4.2, "Fuel System Design."

The safety analysis for the recirculation flow control failure with increasing flow event[28] at the River Bend Station in Louisiana concluded that "An evaluation of the radiological consequences is not required for this event since no radioactive material is released from the fuel."[29] If this event were to occur with pre-existing fuel cladding failures, this analysis would be rendered invalid. Since this analysis assumes that the fuel cladding remains intact, its conclusions are invalidated when there are fuel cladding failures.

The safety analysis for the feedwater controller failure maximum demand event[30] at River Bend concludes that fuel and pressure vessel "barriers maintain their integrity and function as designed."[31] Obviously, this analysis's conclusion is invalidated when the plant operates with pre-existing fuel cladding failures.

The safety analysis for the rod withdrawal error event[32] at River Bend specifies that "An evaluation of the barrier performance was not made for this event since this is a localized event with very little change in the gross core characteristics."[33] Fuel cladding damage is a localized event. The failed fuel rod has a pinhole leak or a hairline split in its cladding or a cracked weld at its end cap. If the rod withdrawal error occurs in the vicinity of the fuel cladding defect, the big change in local characteristics could propagate that defect. Thus, this analysis's conclusion is invalidated when the plant operates with a fuel rod defect.

The safety analysis for a control element assembly ejection event[34] at the Calvert Cliffs Nuclear Plant concluded that "the site boundary [radiological] dose guidelines will be approached." [35]

---

[28] This potential accident is comparable to a mistake using a bellows to flame a wood fire. If too much air is supplied, the fire may blaze up out of control. Likewise, putting too much water through the River Bend reactor core can cause it to run out of control.

[29] Entergy Operations, River Bend Station Updated Final Safety Analysis Report, Section 15.4.5.5, "[Recirculation Flow Control Failure with Increasing Flow] Radiological Consequences."

[30] This potential accident is similar to the recirculation flow control failure with increasing flow event in that too much water to the reactor core results in an uncontrolled power increase.

[31] Entergy Operations, River Bend Station Updated Final Safety Analysis Report, Section 15.1.2.4, "[Feedwater Controller Failure Maximum Demand] Barrier Performance."

[32] This potential accident involves the inadvertent withdrawal of a control rod causing the power produced by the adjacent fuel assemblies to increase significantly.

[33] Entergy Operations, River Bend Station Updated Final Safety Analysis Report, Section 15.4.2.4, "[Rod Withdrawal Error] Barrier Performance."

[34] This potential accident is comparable to car engine throwing one of its pistons. The piston may break the engine casing. Likewise, the ejected control element assembly may break the reactor coolant pressure boundary and allow reactor water to leak out.

[35] Baltimore Gas & Electric Company, Calvert Cliffs Nuclear Plant Updated Final Safety Analysis Report, Section 14.13.2, "Sequence of Events [Control Element Assembly Ejection]."

The analysis found the postulated event acceptable because the plant's design features "will prevent fuel clad failure, will prevent exceeding the [reactor coolant system] Pressure Upset Limit, and will therefore limit the radiological site boundary dose [i.e., the radiation levels experienced by a member of the public at the plant's fence] to below the criteria in 10 CFR 100 guidelines." [36] Since this analysis assumes that fuel cladding failures are prevented, its conclusions are invalidated when there are pre-existing fuel cladding failures.

The NRC's Standard Review Plan states that the fuel design bases ensure that "the number of fuel rod failures is not underestimated for postulated accidents." [37] Yet, the previous accident analyses underestimated the number of fuel rod failures if those plants operated with fuel cladding failures. Thus, the answer to this criterion is YES.

The Wolf Creek plant recently experienced fuel cladding failures affecting 44 fuel rods in three fuel assemblies. According to an NRC report on the problem, "The most severely degraded fuel rod fragmented into three segments during fuel handling operations while offloading the core."[38] Fuel handling operations include removing a fuel assembly from the reactor core, placing it in a device called an upender, lowering the assembly to a horizontal position, transferring it through the reactor containment wall into the fuel handling building, raising the assembly to a vertical position, and moving it to a storage location in the spent fuel pool. These manipulations put dead load force (i.e., gravity) on the fuel assembly and its fuel rods. Fuel assemblies are designed to withstand the force associated with these handling evolutions, at least when their fuel cladding is undamaged. Apparently at Wolf Creek, the force of gravity was sufficient to cause the structural failure of a fuel rod with previously damaged cladding.

What if an accident occurred when the fuel assemblies with the damaged cladding still resided in the reactor core? For example, consider the hydrodynamic forces inside the reactor vessel following a break of a large pipe connected to it. The high energy water escaping through the break exerts considerable force. The side force on the fuel rods may approach, or even exceed, the dead load force during fuel handling. The weakened fuel cladding may experience structural failure as was encountered during fuel handling. Fuel rod structural failure could have very serious consequences during an accident. The dislodged fuel rod segments could interfere with the insertion of control elements attempting to shut down the reactor. Fuel assemblies are tightly packed into the reactor vessel. The clearance between fuel assemblies and control elements is fractions of an inch at most. Fuel rod segments would not have to move much in order to interfere with control elements. Thus, the consequences of previously analyzed accidents could be increased by operation with fuel cladding failures. The answer to this criterion is YES.

---

[36] Baltimore Gas & Electric Company, Calvert Cliffs Nuclear Plant Updated Final Safety Analysis Report, Section 14.13.4, "Conclusion [Control Element Assembly Ejection]."

[37] Nuclear Regulatory Commission, NUREG-0800, Standard Review Plan, Section 4.2, Fuel System Design.

[38] United States Nuclear Regulatory Commission, Information Notice 93-82, "Recent Fuel And Core Performance Problems In Operating Reactors," October 12, 1993.

- Criterion 2: May the possibility for an accident or malfunction of a different type than any evaluated previously in the safety analysis report be created by operation with failed fuel cladding?

After residing in the reactor core for one or more cycles of operation, fuel assemblies are moved to the spent fuel pools. "Spent" fuel assemblies continue to generate considerable amounts of heat and release deadly amounts of radiation for many years. The worst-case spent fuel pool accident is typically assumed to be a fuel handling event. The analysis for this event assumes that a fuel assembly is dropped onto another fuel assembly.[39] Fuel rods in both assemblies are assumed to fail to evaluate the radiological consequences of the event. The spent fuel pools are also analyzed for possible damage resulting from an earthquake. These analyses generally assume that no fuel damage occurs as long as the fuel storage racks remain structurally intact.

Some spent fuel pool accident analyses take credit for operation of the spent fuel building's ventilation system. This system routes the building's exhaust air through filters, thus lowering the radiological dose to the public. At many plants, the ventilation system only performs this safety function when fuel handling operations are underway.

Spent fuel assemblies with cladding failures may have those failures propagate when subjected to earthquake forces. Radioactive gases released from spent fuel assemblies following an earthquake may cause radiological consequences which exceed those for the fuel handing event if (a) the inventory from more than the fuel rods in two assemblies is released, or (b) credit is taken in the fuel handling event analysis for operation of the spent fuel building's ventilation system but the system is unavailable. Consequently, the answer to this criterion is MAYBE.

- Criterion 3: May the margin of safety as defined in the basis for any technical specification be reduced by operation with failed fuel cladding?

The standard technical specifications prepared by Westinghouse, General Electric, Combustion Engineering, and Babcock & Wilcox (vendors for all of the operating plants in the United States) specify that "The fuel cladding must not sustain damage as a result of normal operation and [anticipated operational occurrences]."[40] The NRC considers fuel cladding to be damaged when its integrity is lost.[41] The detection of fission products *outside* the fuel rods is irrefutable evidence that fuel cladding integrity has been lost.

---

[39] Baltimore Gas & Electric Company, Calvert Cliffs Nuclear Plant Updated Final Safety Analysis Report, Section 14.18.2, "Method of Analysis [Fuel Handling Accident]."

[40] Babcock & Wilcox Company, Standard Technical Specifications, Section B 2.1.1., "Reactor Core SLs," Combustion Engineering, Standard Technical Specifications, Section B 2.1.1, "Reactor Core SLs," General Electric Company, BWR/4 Standard Technical Specifications, Section B 2.1.1, "Reactor Core SLs," and Westinghouse Electric Corporation, Standard Technical Specifications, Section B 2.1.1, "Reactor Core SLs."

[41] Nuclear Regulatory Commission, NUREG-0800, Standard Review Plan, Section 4.2, "Fuel System Design."

Attachment 1
Unreviewed Safety Question Assessment

The standard technical specifications are the templates from which individual plant operating licenses are derived. Since these specifications establish zero defects as the minimally acceptable standard, operation with fuel cladding failures clearly represents a safety margin reduction. Consequently, the answer to this question appears is YES.

Conclusion

Federal regulations specify that an unreviewed safety question is indicated when the answer to any one of the criteria is non-negative. UCS's assessment determined that none of the answers is negative. Three of the answers are unequivocally YES and a fourth is MAYBE. Thus, nuclear power plant operation with failed fuel cladding is clearly an unreviewed safety question. NRC approval is required for a plant to continue operating with fuel cladding failures.

Performed by: David A. Lochbaum 04-02-98
David A. Lochbaum
Nuclear Safety Engineer

Figure 1
Fuel Rod Schematic

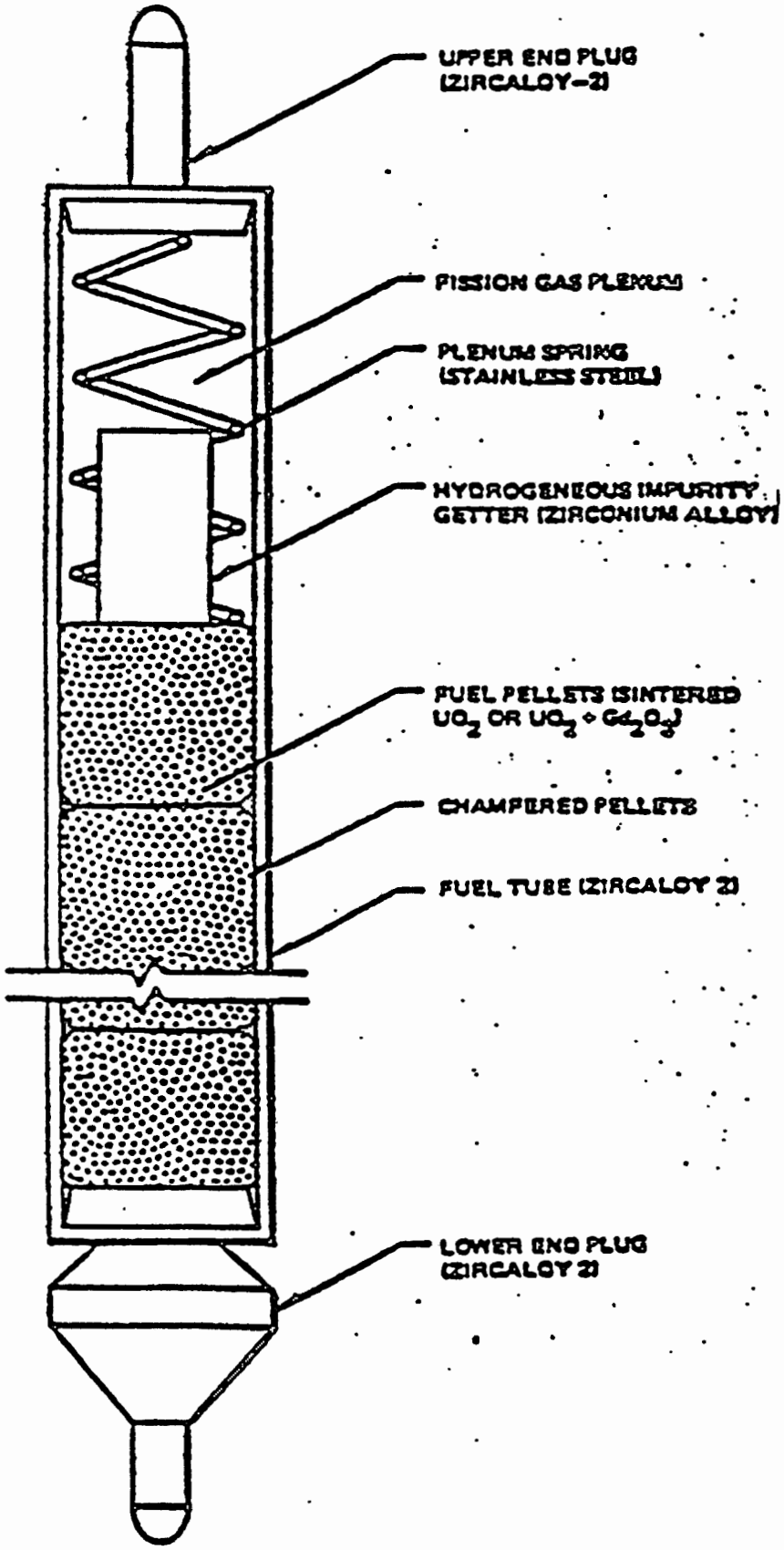

Figure 2
Fuel Assembly Schematic

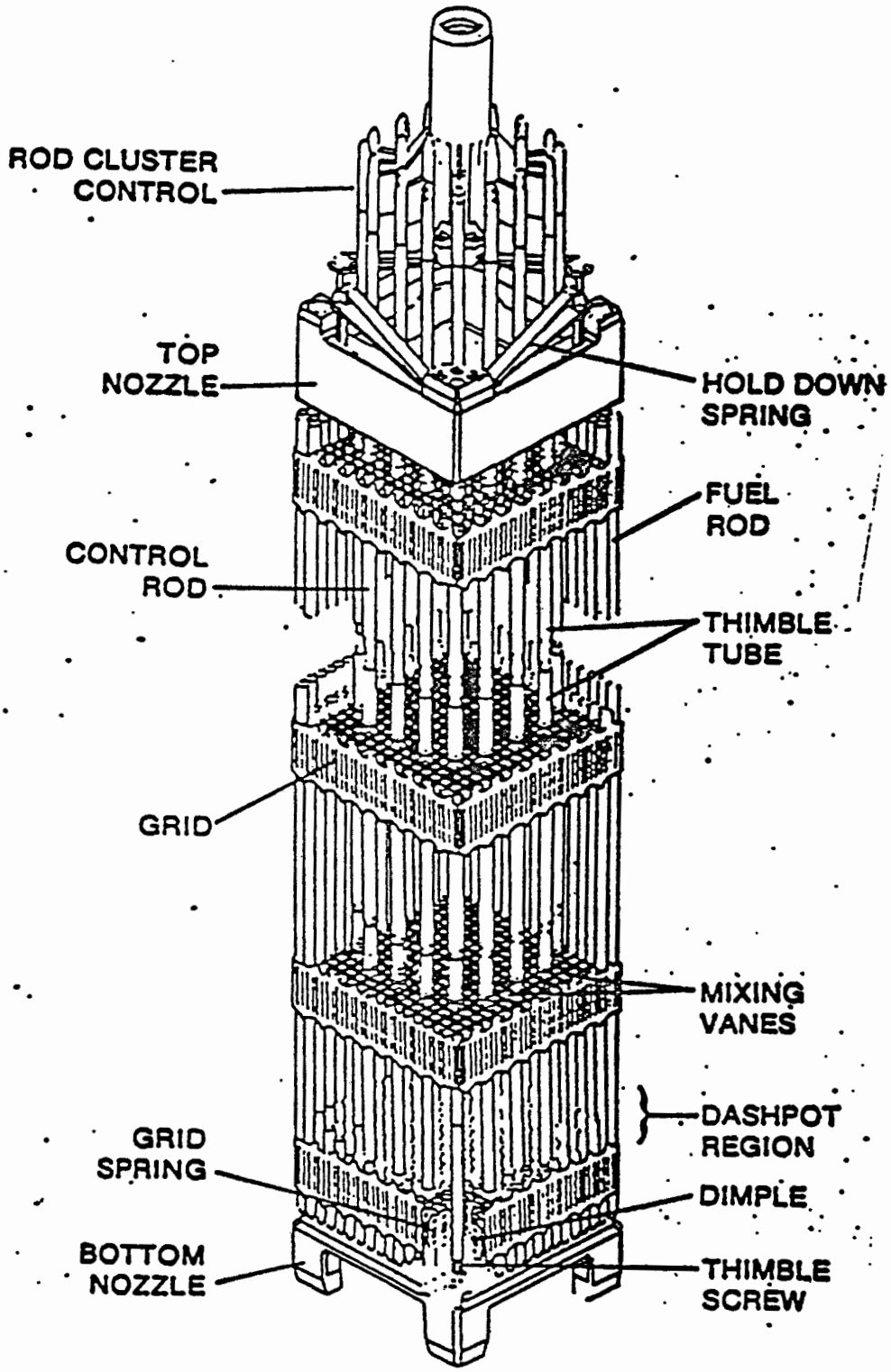

Figure 3
Defense-in-Depth Barriers

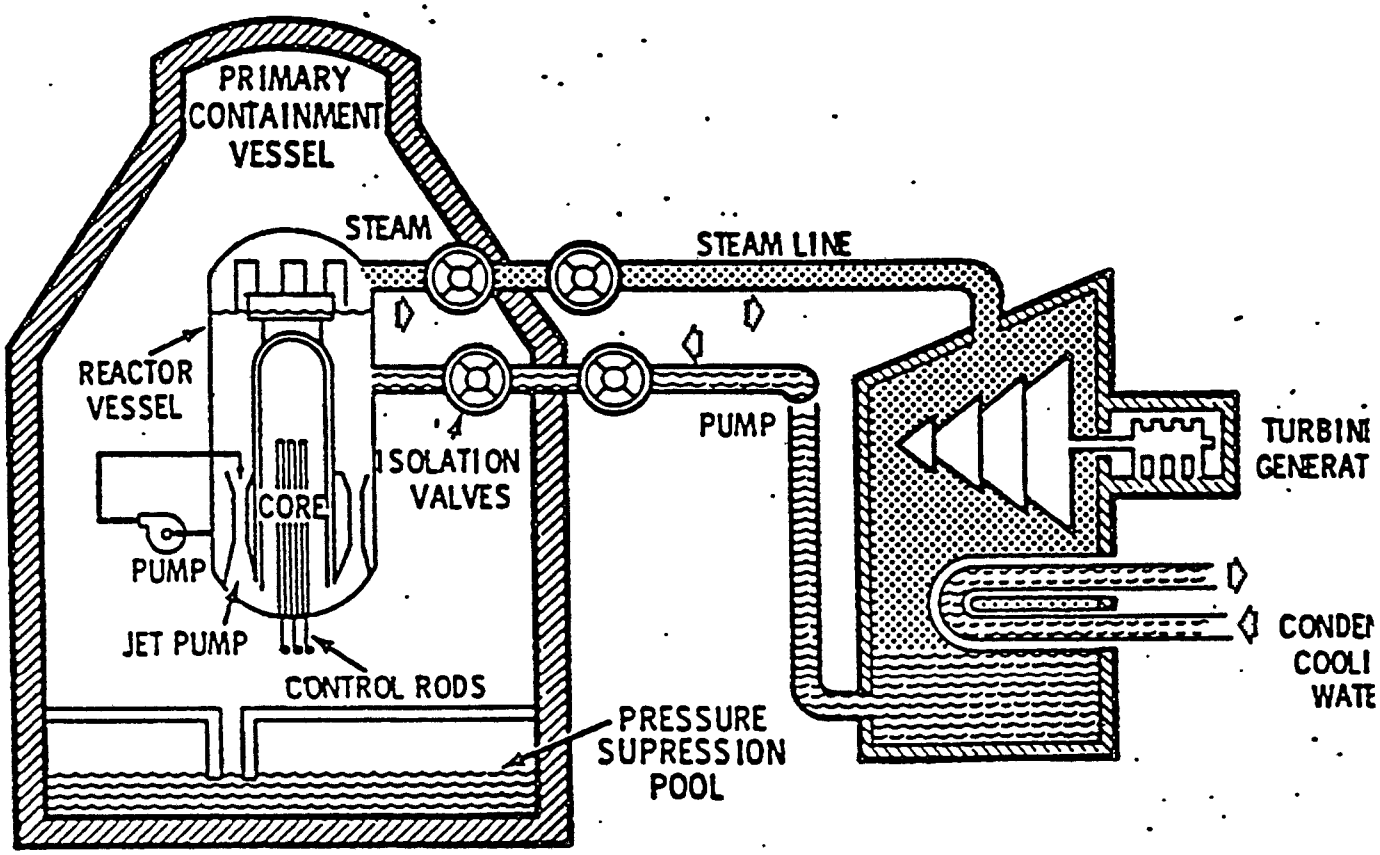

UNION OF CONCERNED SCIENTISTS

DOCKETED
USNRC

'99 APR 20 P1:30

OFFICE OF SECRETARY
RULEMAKINGS AND
ADJUDICATIONS STAFF

November 9, 1998

Dr. William Travers
Executive Director for Operations
United States Nuclear Regulatory Commission
Washington, DC 20555-0001

SUBJECT: PETITION PURSUANT TO 10 CFR 2.206, PERRY NUCLEAR POWER PLANT

Dear Dr. Travers:

The Union of Concerned Scientists submits this petition pursuant to 10 CFR 2.206 requesting that the Perry Nuclear Power Plant in Ohio be immediately shut down and its operating license suspended or modified until such time that the facility's design and licensing bases are properly updated to permit operation with failed fuel assemblies or until all failed fuel assemblies are removed from the reactor core.

Background

On April 2, 1998, UCS provided the Nuclear Regulatory Commission with a copy of our report titled "Potential Nuclear Safety Hazard / Reactor Operation with Failed Fuel Cladding." We concluded:

> UCS considers nuclear plants operating with fuel cladding failures to be potentially unsafe and to be violating federal regulations.

The NRC's Weekly Information Report for the week ending October 30, 1998, stated:

> On September 2, 1998, the [Perry Nuclear Power Plant] licensee detected an increase in the long-lived isotope Xe-133 in the offgas pretreatment steam, indicating the existence of a pinhole leak in a fuel rod. The GE Fuel Performance Manager was consulted and concurred with the conclusion that a pinhole leak existed.
>
> Subsequent examinations led the licensee to conclude that the leak came from a twice-burned fuel bundle. The leak was suppressed by repositioning of the control rods. In addition, the licensee implemented administrative procedures to limit power changes to less than or equal to one percent per hour to prevent further degradation to the fuel pin.
>
> On October 28, 1998, the licensee identified a second increase in noble gas thus indicating a second pinhole leak in a fuel rod. The licensee intends to take actions to identify and suppress this second leak over the upcoming weekend.

Washington Office: 1616 P Street NW Suite 310 • Washington DC 20036-1495 • 202-332-0900 • FAX: 202-332-0905
Cambridge Headquarters: Two Brattle Square • Cambridge MA 02238-9105 • 617-547-5552 • FAX: 617-864-9405
California Office: 2397 Shattuck Avenue Suite 203 • Berkeley CA 94704-1567 • 510-843-1872 • FAX: 510-843-3785

> No obvious cause of the failure can be determined at this time. The most common cause of fuel failures among BWRs is debris-induced fretting. The Perry facility has been operating at essentially full power since the fall 1997 refueling outage. The next refueling outage is scheduled for April 1999.

As detailed in UCS's April 1998 report on reactor operation with failed fuel cladding, it has not been demonstrated that the effects from design bases transients and accidents (i.e., hydrodynamic loads, fuel enthalpy changes, etc.) prevent pre-existing fuel failures from propagating. The available information for the Perry plant suggests that either the original fuel failure is propagating and/or there is a common-mode failure mechanism degrading cladding integrity. It is therefore possible that significantly more radioactive material will be released to the reactor coolant system during a transient or accident than that experienced during steady state operation. Thus, the existing design bases accident analyses for Perry do not bound its current operation with known fuel cladding failures.

In addition to operating with non-bounding design bases accident analyses, it appears that the Perry licensee is also violating its licensing basis for worker radiation protection under the as low as is reasonably achievable (ALARA) program.

According to NRC Information Notice No. 87-39, "Control of Hot Particle Contamination at Nuclear Plants:"

> A plant operating with 0.125 percent pin-hole fuel cladding defects showed a five-fold increase in whole-body radiation exposure rates in some areas of the plant when compared to a sister plant with high-integrity fuel (<0.01 percent leakers). Around certain plant systems the degraded fuel may elevate radiation exposure rates even more.

Industry experience demonstrated that reactor operation with failed fuel cladding increased radiation exposures for plant workers. The Perry licensee informed the NRC about potential fuel cladding failures. It could shut down the facility and remove the failed fuel assemblies from the reactor core. Instead, it continues to operate the facility with higher radiation levels that are known to provide greater risk to plant workers.

Since it appears that operation with one or more failed fuel assemblies is not permitted by its design and licensing bases, Perry must be immediately shut down. The facility must remain shut down until:

- The Perry licensee removes the failed fuel assemblies from the reactor core.

  – OR –

- The Perry licensee properly updates the plant's design and licensing bases to permit the plant to operate with known fuel damage.

Basis for Requested Action

UCS is a non-profit, public-interest organization with sponsors across the United States, including Ohio. UCS monitors performance at nuclear power plants in the United States against safety regulations promulgated by the NRC to protect the public and plant workers. When real or potential erosion of mandated safety margins is detected, as is currently indicated at this time at Perry, UCS engages the NRC, the media, and other authorities to resolve the safety concerns.

Requested Actions

UCS petitions the NRC to require the Perry Nuclear Power Plant to be immediately shut down and that the facility remain shut down until all of the failed fuel assemblies are removed from the reactor core. Alternatively, the plant could be restarted after its design and licensing bases were properly updated to reflect continued operation with failed fuel assemblies.

UCS respectfully requests a hearing on this petition to present new information on reactor operation with failed fuel assemblies. This new information will include, but is not limited to, a discussion of the April 1998 UCS report and the plant-specific information regarding Perry. While our concerns apply to Perry, we respectfully request that this hearing be held in the DC area since the issue affects all operating nuclear power plants.

Sincerely,

David A. Lochbaum
Nuclear Safety Engineer

enclosure: "Potential Nuclear Safety Hazard / Reactor Operation with Failed Fuel Cladding," April 22, 1998

UNION OF
CONCERNED
SCIENTISTS

Potential Nuclear Safety Hazard
Reactor Operation with Failed Fuel Cladding

The Union of Concerned Scientists has identified a potential safety hazard at nuclear power plants that operate with small cracks and holes in the metal tubing, also called cladding, containing their fuel. The fuel cladding is a vital barrier between highly radioactive materials and the environment. From a review of available documentation, UCS concludes that federal regulations require this barrier to be intact during plant operation. There is a good reason for these regulations – the public cannot be harmed as long as the fuel cladding remains intact. If it is not intact, radioactivity will be released to the plant and the environment. Such a release could affect the health of plant workers and members of the public. In addition, fuel rods with degraded cladding may break apart during an accident and prevent safety equipment from functioning. Despite these potentially serious consequences, nuclear plants routinely operate with defective fuel cladding. In fact, many, if not all, nuclear plants have operated with damaged fuel cladding.

UCS recommends that the Nuclear Regulatory Commission (NRC) enforce federal regulations which prohibit nuclear plants from operating with defective fuel cladding. These regulations allow the NRC to permit nuclear plants to operate with defective fuel cladding, but only when their owners establish acceptable boundaries based on studies of both normal operating and accident conditions. Until these safety concerns are resolved, UCS considers nuclear plants operating with fuel cladding failures to be potentially unsafe and to be violating federal regulations.

Background

The following sections discuss: design and licensing bases requirements for nuclear plants; their specific application to nuclear fuel design; the use of multiple barriers in protecting the public; the role of the fuel cladding as a barrier; the experience with fuel cladding failures, and the potential safety hazards from fuel cladding failures.

Design and Licensing Bases Requirements

Design and licensing bases requirements establish safe operating boundaries which are supported by extensive safety analyses. Operating within the boundaries provides reasonable assurance that the public will be protected if there is an accident. The safety or danger of operating outside the boundaries has not been analyzed. As a result, safety margins may be compromised when boundaries are crossed, increasing the risk to the public. Therefore, federal regulations do not permit plants to operate in unanalyzed conditions.

Fuel Design

Nuclear plant are powered by fuel rods which contain uranium dioxide pellets roughly the size and shape of a large pencil eraser stacked within 12 to 14 feet long metal tubes sealed at each

Washington Office: 1616 P Street NW Suite 310 • Washington DC 20036-1495 • 202-332-0900 • FAX: 202-332-0905
Cambridge Headquarters: Two Brattle Square • Cambridge MA 02238-9105 • 617-547-5552 • FAX: 617-864-9405
California Office: 2397 Shattuck Avenue Suite 203 • Berkeley CA 94704-1567 • 510-843-1872 • FAX: 510-843-3785

end with welded metal caps.[1] A simplified drawing of a fuel rod is shown in Figure 1. The fuel tubes are also called the fuel cladding. Fuel cladding is like the gas tank in a car – if the tank is breached, highly volatile gasoline can spill out to threaten the safety of its passengers and innocent bystanders, as well as degrading the environment. When fuel cladding is breached, highly radioactive material spills out to threaten the safety of plant workers and the public.

All operating US nuclear power plants use fuel assemblies containing square arrays of fuel rods. A typical fuel assembly is illustrated in Figure 2. As shown in this figure, the fuel rods must remain intact to provide the overall structural integrity of the fuel assemblies. The fuel design bases ensure that "the fuel is not damaged as a result of normal operation and anticipated operational occurrences." [2] The phrase "not damaged," as used by both the NRC and nuclear plant owners, means that the fuel rods are not damaged to the point where they would fail.[3] Thus, the fuel design bases includes the explicit requirement that fuel cladding remains intact during normal operation.

Defense-in-Depth Barriers

The splitting, or fissioning, of uranium atoms in the fuel rods releases energy that heats water – nuclear energy that powers the plant. Byproducts of the fission process include radioactive gases and solids. Plutonium is also produced by the nuclear reactions. These radioactive materials emit gamma rays along with alpha and beta particles which can cause damage to the human body. The fuel cladding keeps the radioactive materials contained. If the cladding is defective, radioactive materials will leak into the water which surrounds the cladding and keeps the fuel rods cooled. This water is contained within the reactor vessel and the piping connected to it, which form a second barrier to contain the radioactive materials. If the piping fails, contaminated water spills into the reactor containment building. The reactor vessel and its piping are located within a reactor containment building which forms a third barrier. Because the reactor containment building is not leak tight, it reduces, but does not eliminate, the possibility that radioactive material would escape. Figure 3 shows a simplified drawing of these three barriers.

Three barriers between the radioactive material and the environment imply that one barrier can be breached during plant operation leaving two intact barriers to protect the public. However, the safety analyses assume that all three barriers are intact prior to any accident. Let's assume the rupture of a pipe connected to the reactor vessel breaches one of the barriers. If the pipe rupture occurs when the fuel cladding is defective, then two of the barriers are breached. The remaining barrier, the reactor containment building, only reduces the amount of radioactive material released to the environment. Thus, all three barriers must be intact during plant operation for the public to be protected.

---

[1] Baltimore Gas & Electric Company, Calvert Cliffs Nuclear Plant Updated Final Safety Analysis Report, Section 3.3.2.1, "Fuel Rod Mechanical Design," and General Electric Company, "Licensing Topical Report / General Electric Standard Application for Reactor Fuel," NEDO-24011-A-4, January 1982.

[2] Nuclear Regulatory Commission, NUREG-0800, Standard Review Plan, Section 4.2, Fuel System Design.

[3] Nuclear Regulatory Commission, NUREG-0800, Standard Review Plan, Section 4.2, Fuel System Design, and GPU Nuclear Corporation, Oyster Creek Nuclear Generating Station Updated Final Safety Analysis Report, Section 4.4.2, "Description of Thermal and Hydraulic Design of the Reactor Core."

Potential Nuclear Safety Hazard
Reactor Operation with Failed Fuel Cladding

The fuel cladding is the most important of the three barriers. If the fuel cladding remains intact, the other two barriers can completely fail and the public will still be protected. The intact fuel cladding contains the radioactive gases and solids and prevents them from being released to the atmosphere. The public cannot be harmed from a nuclear plant accident in which the fuel cladding remains intact. But, as the next section indicates, nuclear plants routinely operate with this vital barrier seriously degraded.

Fuel Cladding Failure Experience

Numerous fuel cladding failures from various causes have been reported over the years. For example, the water flowing through the reactor core has caused fuel rods to sway back and forth. In this situation, the fuel rods vibrate against the grid (shown in Figure 2) and damage the cladding. At other plants, debris in the reactor water, such as metal flakes from rusted piping, has lodged against the grid. The friction from the vibration of this debris damaged the cladding. Another failure mode results when fuel pellets expand faster than the fuel rod cladding (see Figure 1) as their temperatures increase. The expanding pellets stretch the cladding, sometimes until it cracks or splits. Finally, the welds holding the upper and lower end plugs to the fuel rod cladding (see Figure 1) have sometimes been defective, causing pinhole leaks or even cracks to form. Other failure modes have been experienced too. Many, if not all, nuclear plants have experienced fuel cladding failures during their lifetimes. Few plants have shut down early to remove failed fuel rods.

Leaking fuel rods are detected by increased radioactivity levels in the reactor vessel's liquid and gaseous releases.[4] Not surprisingly, the radioactivity levels rise significantly when fuel cladding fails. The causes of fuel cladding failures cannot be determined until the plant is shut down and the leaking fuel rods examined.

The following reports illustrate recent fuel cladding failure incidents and include some serious events.

The Vermont Yankee plant recently operated with at least one failed fuel rod for many months.[5] Its owners elected to operate with the leaker(s) until the plant's next scheduled refueling outage in the spring of 1998 rather than incur the cost of an unscheduled shut down.[6] The Brunswick Unit 1 plant in North Carolina operated during 1997 with fuel cladding failures that its owners tolerated.[7] The Surry plant in Virginia also operated in 1997 with failed fuel cladding.[8] These incidents demonstrate that nuclear plants continue to operate with fuel cladding failures.

---

[4] Entergy Operations, River Bend Station Updated Final Safety Analysis Report, Section 4.2.4.2, "Online Fuel System Monitoring," and Section 11.5.2.2.1, "Main Steam Line Radiation Monitoring System."

[5] Nuclear Regulatory Commission, Daily Event Report, DER No. 33152, October 28, 1997.

[6] Vermont Yankee Nuclear Power Corporation, Presentation to Vermont State Nuclear Advisory Panel, December 3, 1997.

[7] Johan Blok and Roger Asay, Centec XXI, "Pinpoint fuel leaks to improve nuclear economics," *Power*, January/February 1998.

Potential Nuclear Safety Hazard
Reactor Operation with Failed Fuel Cladding

A few years ago, the owner of the Point Beach Nuclear Plant in Wisconsin reported a significant event in which "The fuel cladding was failed to the extent that fuel pellets could be seen through the hole in the clad. However, no pellets escaped from the rod." The fuel rod failure was detected when the radioactivity levels of the reactor water rose to a level that was "10 percent of that allowed by [Point Beach Nuclear Plant's operating license]."[9] In other words, the plant's operating license would have allowed it to remain running with up to nine other similarly failed fuel rods. This event suggests that the restrictions on reactor water radioactivity levels are too high to prevent operation with gaping holes in fuel rod cladding.

At the Palisades plant in Michigan, three portions of a broken fuel rod were discovered in different parts of the reactor. One segment, nearly 5½ feet long, was missing about one-third of its fuel pellets. A second segment, 4½ feet long, and a third segment, 1½ feet long, appeared to contain all their fuel pellets.[10] This event is disturbing because it highlights how fragile the cladding can become during normal operation. At Palisades, this fuel rod literally fell apart as it was being removed from the reactor core and radioactive material was lost, including highly toxic plutonium.

Fuel Cladding Failure Consequences

What is the safety threat from a nuclear plant operating with fuel cladding failures? The fact that many plants have operated for many years with failed fuel cladding could be taken to imply an acceptable safety record. However, that is not the case. That fact demonstrates, at most, that the public is protected with fuel cladding failures during normal plant operation. It does not provide any reason to believe that the public will be protected in the event of an accident. It also does not provide any reason to believe that nuclear workers will be protected during normal plant operation with failed fuel cladding.

What might happen if a nuclear plant with failed fuel cladding had an accident? A common accident scenario involves breaking a large pipe connected to the reactor vessel. Water and steam rush out of the reactor vessel through the broken pipe. The water flow in the reactor core, instead of flowing from the bottoms of the fuel assemblies to their tops, may flow across the fuel assemblies. This cross-flow 'pushes' the fuel rods to the side rather than towards the top. Cladding that is weakened may fail under this side force. The plant's response to the pipe break is to shut down. Control rods are automatically inserted into the reactor core to stop the fissioning process. Fuel rods which fail and shift out of their vertical alignment may prevent the insertion of control rods. The safety analyses assume that the control rods can be inserted and shut down the reactor. Can fuel cladding failures cause such problems during this accident scenario? No one knows. Pre-existing fuel cladding failures have not been considered in the

---

[8] Nuclear Regulatory Commission, Inspection Report 50-280/97-10, December 15, 1997.

[9] Wisconsin Electric Power Company, Licensee Event Report No. 85-002-01, "Failed Fuel Rod in Assembly H14, Point Beach Nuclear Plant Unit 1," May 19, 1986.

[10] United States Nuclear Regulatory Commission, Information Notice 93-82, "Recent Fuel And Core Performance Problems In Operating Reactors," October 12, 1993.

safety analyses for this accident or any other accident. Yet, nuclear plants routinely operate with such fuel cladding failures.

What happens if fuel cladding failures increase the severity of nuclear plant accidents? Since plant safety analyses assume that fuel cladding is undamaged when accidents occur, the failures may cause more radioactivity to be released to the environment than has been previously considered. After all, a key barrier confining this highly radioactive material is already breached when the accident begins. Under no circumstances will less radioactivity be released. Thus, it is imperative from a public health standpoint that nuclear plants do not operate with fuel cladding failures unless safety analyses are performed which demonstrate that the consequences from accidents under these conditions are acceptable.

Summary

The fuel cladding is the most important of the three barriers between highly radioactive material and the environment. As long as the fuel cladding remains intact, no nuclear plant accident can threaten public health and safety. Yet, nuclear plants routinely operate with damaged fuel cladding.

Safety analyses assume that the fuel cladding is intact when accident scenarios begin. Operation with pre-existing fuel cladding failures may mean that a nuclear accident will have more severe consequences than predicted by the invalidated safety analyses. Thus, UCS considers a nuclear plant operating with defective fuel cladding to represent an increased risk to the public.

The fuel design bases require the fuel cladding to remain intact during normal plant operation. Federal safety regulations require that plants operate within the boundaries established by their design bases. Therefore, UCS concludes that operating a nuclear plant with failed fuel cladding violates federal safety regulations.

See Attachment 1 for details of UCS's assessment of reactor operation with failed fuel cladding.

ALARA Issue

Nuclear plant owners are required by federal regulations to keep the release of radioactive materials "as low as reasonably achievable" (ALARA).[11] According to the NRC, "a plant operating with 0.125 percent pin-hole fuel cladding defects showed a general five-fold increase in whole-body radiation exposure rates in some areas of the plant when compared to a sister plant with high-integrity fuel (<0.01 percent leakers). Around certain plant systems the degraded fuel may elevate radiation exposure rates even more."[12] The "sister plants" were virtually identical because they were built at the same time by the same owner on the same site. The

[11] Title 10 of the Code of Federal Regulations, Sections 50.34a, "Design objectives for equipment to control releases of radioactive material in effluents – nuclear power reactors," and 50.36, "Technical specifications," and Title 10 of the Code of Federal Regulations, Part 50, Appendix I, "Numerical Guides for Design Objectives and Limiting Conditions for Operation to Meet the Criterion "As Low As Reasonably Achievable" for Radioactive Material in Light-Water-Cooled Nuclear Power Reactor Effluents."

[12] United States Nuclear Regulatory Commission, Information Notice No. 87-39, "Control Of Hot Particle Contamination At Nuclear plants," August 21, 1987.

significant variation in radiation exposure rates is not due to thicker concrete or other design differences – it is due to the failed fuel cladding. UCS is troubled by this NRC evidence because it shows a significantly increased risk to nuclear plant workers at a facility operating with just 0.125 percent fuel cladding failures. Many plants consider it permissible to operate with eight times as many fuel cladding failures (up to 1.0% failures).

Fuel cladding defects release radioactive materials into the reactor water. The water carries them to all parts of the plant, contaminating equipment throughout the facility. Workers conducting equipment inspections and maintenance receive higher radiation exposures. Indeed, some plant workers have received radiation doses far greater than allowed by federal regulations from highly radioactive material released through fuel cladding defects.[13]

It is a well-documented fact that plant operation with defective fuel cladding significantly increases personnel exposures. Federal regulations requires nuclear plant owners to keep the release of radioactive materials as low as reasonably achievable. Therefore, it is both an illegal activity and a serious health hazard for nuclear plants to continue operating with fuel cladding damage.

Conclusions And Recommendations

Conclusions

It is UCS's considered opinion that existing design and licensing requirements do not allow plants to operate with known fuel cladding failures. In addition, federal regulations require formal NRC approval prior to any nuclear plant operating with fuel cladding failures. Such approval has neither been sought nor granted.

UCS's evaluation (see attachment 1) suggests that both the probability and consequences of postulated accidents may be increased when nuclear plants operate with pre-existing fuel cladding failures. Thus, operation with fuel cladding failures is a violation of federal regulations which represents a potential threat to public health and safety.

UCS's assessment was generic. Consequently, this conclusion does not explicitly apply to any operating plant. However, UCS's assessment identified the strong potential for operation with fuel cladding failures to be an illegal activity unless the plant's owners performed a plant-specific safety evaluation which established such operation as acceptable and the NRC has formally reviewed and approved this safety evaluation. Absent both of these conditions, it seems highly probable that any plant operating with fuel cladding failures is violating its design and licensing bases requirements, a condition not allowed by federal safety regulations. It further appears that such illegal operation may have serious safety implications. Finally, operation with fuel cladding damage also seems to violate the ALARA concept mandated by federal regulations, thus exposing plant workers to undue risk.

[13] United States Nuclear Regulatory Commission, Information Notice No. 87-39, "Control Of Hot Particle Contamination At Nuclear plants," August 21, 1987.

Potential Nuclear Safety Hazard
Reactor Operation with Failed Fuel Cladding

UCS's research for this assessment did not locate any information which suggests that operation with failed fuel cladding has been previously evaluated pursuant to federal regulations. There is considerable documentation on fuel cladding failure events, on inspections of failed fuel rods, and on various fuel damage mechanisms. Despite extensive, focused efforts, UCS was unable to find any indication that the safety implications of plant operation with failed fuel cladding have been considered by the fuel vendors, the NRC, or nuclear plant owners. This non-existent data further reinforces UCS's conclusions that operation with failed fuel cladding has not been properly analyzed by the industry, has not been approved by the NRC, and is both potentially unsafe and illegal.

Recommendations

UCS recommends that the Nuclear Regulatory Commission take appropriate steps to prohibit nuclear power plants from operating with fuel cladding damage until the safety concerns raised in this report are resolved. These appropriate steps include, but are not limited to, the following:

- Plant owners should be required to shut down their facilities upon detection of a fuel cladding failure. The plants must not restart until the failed fuel rods are removed.

- Plant owners should be required to evaluate the safety implications of operating with failed fuel cladding in accordance with federal regulations. If these safety evaluations are unable to justify continued operation, the plants should be shut down.

For the long term resolution of the safety concerns raised in this report, UCS recommends that the Updated Final Safety Analysis Reports (UFSARs) be revised. These revisions would establish safe boundaries for operation. After these boundaries are drawn and incorporated into the UFSARs, plants could continue to operate with failed fuel cladding as long as the failures remained within the previously analyzed region. If the amount of failed fuel cladding exceeded the boundaries, then the plant should face the options recommended above.

Attachment 1
Unreviewed Safety Question Assessment

Unreviewed Safety Question Assessment

This attachment contains UCS's evaluation for reactor operation with failed fuel cladding. Our evaluation applied federal regulations for determining when a proposed mode of operation crosses the plant's authorized boundaries and thus requires prior NRC approval. As the results clearly indicate, reactor operation with failed fuel cladding requires NRC approval. Yet, such approval has neither been sought nor granted.

The NRC issues an operating license for a nuclear power plant after reviewing its design and procedures. The plant's owners may modify the facility and revise its procedures as long as the changes do not alter the bases for the NRC's approval of the operating license. A change which alters the operating license bases is called an unreviewed safety question (USQ). For example, a proposed change that reduces the plant's safety margin is an unreviewed safety question because the NRC may have relied on the greater margin in granting the plant's operating license. Likewise, a proposed change that maintains the existing safety margin but does so by operator actions instead of automatic equipment operation is also an USQ because the NRC's approval may have relied on the automatic protective features. When a proposed change involves an USQ, NRC approval must be obtained in advance. Federal regulations specify that a proposed change involves an USQ if:

(1) the probability of occurrence or the consequences of an accident or malfunction of equipment important to safety previously evaluated in the safety analysis report may be increased; or

(2) a possibility for an accident or malfunction of a different type than any evaluated previously in the safety analysis report may be created; or

(3) the margin of safety as defined in the basis for any technical specification is reduced.[14]

Federal regulations require nuclear plant owners to obtain NRC permission prior to conducting any activity for which the answer to one or more of these questions is anything but "NO." As UCS's nuclear safety engineer, I reviewed publicly available documentation to determine if these criteria are satisfied for plants operating with fuel cladding failures. Prior to joining UCS, I worked in the nuclear industry for over 17 years where I developed, reviewed, and assessed literally thousands of USQ determinations.

I divided the first criterion above into the "probability" and "consequences" elements for clarity. The scope of this evaluation was limited to four types of documentation: 1) the Updated Final Safety Analysis Reports (UFSARs) for four of UCS's focus plants (the Calvert Cliffs plant in Maryland, the Oyster Creek plant in New Jersey, the River Bend plant in Louisiana, and the Millstone Unit 3 plant in Connecticut); 2) the non-proprietary version of the fuel design topical report submitted by a vendor (General Electric); 3) the standard technical specifications prepared by all four reactor manufacturers (Westinghouse, General Electric, Babcock & Wilcox, and

[14] Title 10, "Energy," of the Code of Federal Regulations, Section 50.59, "Changes, tests and experiments,"

Combustion Engineering); and 4) NRC correspondence on fuel cladding failure events. The results from this evaluation follow.

- Criterion 1a: May the probability of occurrence of an accident or malfunction of equipment important to safety previously evaluated in the safety analysis report be increased by operation with failed fuel cladding?

The standard technical specifications prepared by Westinghouse, General Electric, Combustion Engineering, and Babcock & Wilcox (vendors for all of the plants operating in the United States) specify that "The fuel cladding must not sustain damage as a result of normal operation."[15] The NRC considers fuel cladding to be damaged when its integrity is lost.[16] The detection of fission products *outside* the fuel rods is irrefutable evidence that fuel cladding integrity has been lost.

The standard technical specifications are the templates from which individual plant operating licenses were derived. Since these specifications establish zero defects as the minimally acceptable standard, operation with fuel cladding failures increases the probability of "malfunction of equipment important to safety," namely the fuel itself, to 100%. For this reason alone, the answer to this question is YES.

To apply the above generic assessment to a specific plant, UCS looked at available documentation for the Oyster Creek Nuclear Generating Station in New Jersey. A design basis for Oyster Creek is "to ensure that no fuel damage will occur in normal operation or operational transients caused by reasonable expected single operator error or equipment malfunction."[17] Fuel rod damage "is defined as a perforation of the cladding which would permit the release of fission product to the reactor coolant."[18] Thus, the detection of failed fuel rod(s) at Oyster Creek would be an equipment malfunction placing the plant outside its design basis. Again, the answer to this question is YES.

A fuel cladding defect may allow gases within a fuel rod to leak out. A defect may also allow water to leak in. It appears that leakage in either direction may also increase the probability that the fuel cladding will not perform its necessary safety function.

---

[15] Babcock & Wilcox Company, Standard Technical Specifications, Section B 2.1.1., "Reactor Core SLs," Combustion Engineering, Standard Technical Specifications, Section B 2.1.1, "Reactor Core SLs," General Electric Company, BWR/4 Standard Technical Specifications, Section B 2.1.1, "Reactor Core SLs," and Westinghouse Electric Corporation, Standard Technical Specifications, Section B 2.1.1, "Reactor Core SLs."

[16] Nuclear Regulatory Commission, NUREG-0800, Standard Review Plan, Section 4.2, "Fuel System Design."

[17] GPU Nuclear Corporation, Oyster Creek Nuclear Generating Station Updated Final Safety Analysis Report, Section 4.4.1, "[Thermal and Hydraulic Design] Design Basis."

[18] GPU Nuclear Corporation, Oyster Creek Nuclear Generating Station Updated Final Safety Analysis Report, Section 4.4.2, "Description of Thermal and Hydraulic Design of the Reactor Core."

Attachment 1
Unreviewed Safety Question Assessment

A fuel cladding defect which allows gases to leak out of a fuel rod has at least two potentially adverse consequences. The fuel rods are pressurized with helium during their fabrication to minimize a problem called cladding creep-collapse. The pressure inside a nuclear plant ranges from 960 to 2,100 pounds per square inch at full power. The difference between a fuel rod's external pressure and internal pressure can exert sufficient inward force to cause the cladding to fill the gaps between fuel pellets.[19] The stress on the cladding can cause it to break. The leakage of helium from a fuel rod reduces its internal pressure, thus potentially increasing the probability of fuel rod damage from cladding creep-collapse.

Inadequate cooling of the fuel is another potential consequence from gases leaking out of a fuel rod. Helium is used to pressurize fuel rods because of its high thermal conductivity.[20] The leakage of helium through a fuel cladding defect may slow down the transfer of heat from the fuel to the water. When heat cannot be dissipated from the fuel as quickly as assumed, the fuel temperature will increase and may reach the point at which it begins to melt. The leakage of helium from a fuel rod may reduce heat transfer rates, thus potentially increasing the probability that the fuel is seriously damaged during a loss-of-coolant accident.

A fuel cladding defect which allows water to leak into a fuel rod also has at least two potentially adverse consequences. During plant operation, high fuel temperatures prevent water from leaking in through a cladding defect. However, water can enter defects when the plant is shut down and cause fuel rods to become waterlogged. If the plant increases power quickly, the rising fuel temperature may cause the water inside the fuel rods to evaporate and perhaps even boil. The water vapor and steam produced inside the fuel rods, unless it is able to leak out through the defects, increase their pressure. This pressure buildup is suspected to have caused the "bursting" of fuel rods at the Point Beach plant in Wisconsin. Sections of the cladding and several fuel pellets could not be located when the damaged assemblies were later inspected.[21]

There is another potential adverse consequence from water leaking into fuel rods. The high operating temperature dissociates the water into hydrogen and oxygen gases. The hydrogen gas interacts with the cladding to form blisters. The blisters embrittle the cladding, leading to perforations.[22] To minimize the moisture content, the fuel pellets are dried prior to being loaded

---

[19] Baltimore Gas & Electric Company, Calvert Cliffs Nuclear Plant Updated Final Safety Analysis Report, Section 3.7.1.1.a, "Clad Creepdown/Creep-Collapse."

[20] Baltimore Gas & Electric Company, Calvert Cliffs Nuclear Plant Updated Final Safety Analysis Report, Section 3.3.2.1, "Fuel Rod Mechanical Design."

[21] B. Siegel, Nuclear Regulatory Commission, "Evaluation of the Behavior of Waterlogged Fuel Rod Failures in LWRs," NUREG-0303, March 1978.

[22] Baltimore Gas & Electric Company, Calvert Cliffs Nuclear Plant Updated Final Safety Analysis Report, Section 3.7.2.1, "Burnable Poison Rod Design Evaluation."

into the fuel rods.[23] Thus, water leaking into a fuel rod may increase the probability that fuel cladding suffers this type of damage, which is called hydriding.

In fact, failure propagation due to hydriding has already been identified. Recent inspections of failed fuel rods at the Salem plant in New Jersey, the Beaver Valley plant in Pennsylvania, and the Wolf Creek plant in Kansas revealed that, "In some of the affected assemblies, secondary hydriding also was evident."[24] A fuel rod at the Perry Nuclear plant in Ohio experienced a cladding crack measuring 20 inches long, or nearly 13% of the fuel rod's length, caused by secondary hydriding.[25] In these events, the initial fuel cladding failures were caused by other mechanisms. These failures later propagated due to hydriding.

Thus, operation with fuel cladding failures has the potential for increasing the probability that an important barrier protecting the public, namely the fuel cladding itself, fails to adequately confine radioactive materials during a postulated accident. The fuel cladding is considered "equipment important to safety." A fuel cladding failure is therefore a malfunction of equipment important to safety. For this reason, too, the answer to this criterion is YES.

Finally, the NRC's Standard Review Plan states that the fuel design bases ensure that "fuel damage is never so severe as to prevent control rod insertion when it is required." [26] Nuclear plant operation with failed fuel cladding has caused individual fuel rods to break into segments during fuel handling evolutions. If degraded fuel cladding were to similarly break during an accident, the fuel rod segments might interfere with control rod insertion. Thus, for this additional reason, the answer to this criterion is YES.

- Criterion 1b: May the consequences of an accident or malfunction of equipment important to safety previously evaluated in the safety analysis report be increased by operation with failed fuel cladding?

The NRC reported that the nuclear fuel's design bases are intended to "provide assurance that the fuel system is not damaged as a result of normal operation. 'Not damaged,' as used in the above statement, means that fuel rods do not fail. Fuel rod failure is defined as the loss of fuel rod [integrity]."[27] Thus, the fuel system, including the fuel cladding, must remain undamaged during normal operation.

---

[23] Baltimore Gas & Electric Company, Calvert Cliffs Nuclear Plant Updated Final Safety Analysis Report, Section 3.3.2.1, "Fuel Rod Mechanical Design, and Nuclear Regulatory Commission, NUREG-0800, Standard Review Plan, Section 4.2, "Fuel System Design."

[24] United States Nuclear Regulatory Commission, Information Notice 93-82, "Recent Fuel And Core Performance Problems In Operating Reactors," October 12, 1993.

[25] United States Nuclear Regulatory Commission, Information Notice 93-82, "Recent Fuel And Core Performance Problems In Operating Reactors," October 12, 1993.

[26] Nuclear Regulatory Commission, NUREG-0800, Standard Review Plan, Section 4.2, Fuel System Design.

[27] Nuclear Regulatory Commission, NUREG-0800, Standard Review Plan, Section 4.2, "Fuel System Design."

Attachment 1
Unreviewed Safety Question Assessment

The safety analysis for the recirculation flow control failure with increasing flow event[28] at the River Bend Station in Louisiana concluded that "An evaluation of the radiological consequences is not required for this event since no radioactive material is released from the fuel."[29] If this event were to occur with pre-existing fuel cladding failures, this analysis would be rendered invalid. Since this analysis assumes that the fuel cladding remains intact, its conclusions are invalidated when there are fuel cladding failures.

The safety analysis for the feedwater controller failure maximum demand event[30] at River Bend concludes that fuel and pressure vessel "barriers maintain their integrity and function as designed."[31] Obviously, this analysis's conclusion is invalidated when the plant operates with pre-existing fuel cladding failures.

The safety analysis for the rod withdrawal error event[32] at River Bend specifies that "An evaluation of the barrier performance was not made for this event since this is a localized event with very little change in the gross core characteristics."[33] Fuel cladding damage is a localized event. The failed fuel rod has a pinhole leak or a hairline split in its cladding or a cracked weld at its end cap. If the rod withdrawal error occurs in the vicinity of the fuel cladding defect, the big change in local characteristics could propagate that defect. Thus, this analysis's conclusion is invalidated when the plant operates with a fuel rod defect.

The safety analysis for a control element assembly ejection event[34] at the Calvert Cliffs Nuclear Plant concluded that "the site boundary [radiological] dose guidelines will be approached." [35]

---

[28] This potential accident is comparable to a mistake using a bellows to flame a wood fire. If too much air is supplied, the fire may blaze up out of control. Likewise, putting too much water through the River Bend reactor core can cause it to run out of control.

[29] Entergy Operations, River Bend Station Updated Final Safety Analysis Report, Section 15.4.5.5, "[Recirculation Flow Control Failure with Increasing Flow] Radiological Consequences."

[30] This potential accident is similar to the recirculation flow control failure with increasing flow event in that too much water to the reactor core results in an uncontrolled power increase.

[31] Entergy Operations, River Bend Station Updated Final Safety Analysis Report, Section 15.1.2.4, "[Feedwater Controller Failure Maximum Demand] Barrier Performance."

[32] This potential accident involves the inadvertent withdrawal of a control rod causing the power produced by the adjacent fuel assemblies to increase significantly.

[33] Entergy Operations, River Bend Station Updated Final Safety Analysis Report, Section 15.4.2.4, "[Rod Withdrawal Error] Barrier Performance."

[34] This potential accident is comparable to car engine throwing one of its pistons. The piston may break the engine casing. Likewise, the ejected control element assembly may break the reactor coolant pressure boundary and allow reactor water to leak out.

[35] Baltimore Gas & Electric Company, Calvert Cliffs Nuclear Plant Updated Final Safety Analysis Report, Section 14.13.2, "Sequence of Events [Control Element Assembly Ejection]."

The analysis found the postulated event acceptable because the plant's design features "will prevent fuel clad failure, will prevent exceeding the [reactor coolant system] Pressure Upset Limit, and will therefore limit the radiological site boundary dose [i.e., the radiation levels experienced by a member of the public at the plant's fence] to below the criteria in 10 CFR 100 guidelines." [36] Since this analysis assumes that fuel cladding failures are prevented, its conclusions are invalidated when there are pre-existing fuel cladding failures.

The NRC's Standard Review Plan states that the fuel design bases ensure that "the number of fuel rod failures is not underestimated for postulated accidents." [37] Yet, the previous accident analyses underestimated the number of fuel rod failures if those plants operated with fuel cladding failures. Thus, the answer to this criterion is YES.

The Wolf Creek plant recently experienced fuel cladding failures affecting 44 fuel rods in three fuel assemblies. According to an NRC report on the problem, "The most severely degraded fuel rod fragmented into three segments during fuel handling operations while offloading the core."[38] Fuel handling operations include removing a fuel assembly from the reactor core, placing it in a device called an upender, lowering the assembly to a horizontal position, transferring it through the reactor containment wall into the fuel handling building, raising the assembly to a vertical position, and moving it to a storage location in the spent fuel pool. These manipulations put dead load force (i.e., gravity) on the fuel assembly and its fuel rods. Fuel assemblies are designed to withstand the force associated with these handling evolutions, at least when their fuel cladding is undamaged. Apparently at Wolf Creek, the force of gravity was sufficient to cause the structural failure of a fuel rod with previously damaged cladding.

What if an accident occurred when the fuel assemblies with the damaged cladding still resided in the reactor core? For example, consider the hydrodynamic forces inside the reactor vessel following a break of a large pipe connected to it. The high energy water escaping through the break exerts considerable force. The side force on the fuel rods may approach, or even exceed, the dead load force during fuel handling. The weakened fuel cladding may experience structural failure as was encountered during fuel handling. Fuel rod structural failure could have very serious consequences during an accident. The dislodged fuel rod segments could interfere with the insertion of control elements attempting to shut down the reactor. Fuel assemblies are tightly packed into the reactor vessel. The clearance between fuel assemblies and control elements is fractions of an inch at most. Fuel rod segments would not have to move much in order to interfere with control elements. Thus, the consequences of previously analyzed accidents could be increased by operation with fuel cladding failures. The answer to this criterion is YES.

---

[36] Baltimore Gas & Electric Company, Calvert Cliffs Nuclear Plant Updated Final Safety Analysis Report, Section 14.13.4, "Conclusion [Control Element Assembly Ejection]."

[37] Nuclear Regulatory Commission, NUREG-0800, Standard Review Plan, Section 4.2, Fuel System Design.

[38] United States Nuclear Regulatory Commission, Information Notice 93-82, "Recent Fuel And Core Performance Problems In Operating Reactors," October 12, 1993.

- Criterion 2: May the possibility for an accident or malfunction of a different type than any evaluated previously in the safety analysis report be created by operation with failed fuel cladding?

After residing in the reactor core for one or more cycles of operation, fuel assemblies are moved to the spent fuel pools. "Spent" fuel assemblies continue to generate considerable amounts of heat and release deadly amounts of radiation for many years. The worst-case spent fuel pool accident is typically assumed to be a fuel handling event. The analysis for this event assumes that a fuel assembly is dropped onto another fuel assembly.[39] Fuel rods in both assemblies are assumed to fail to evaluate the radiological consequences of the event. The spent fuel pools are also analyzed for possible damage resulting from an earthquake. These analyses generally assume that no fuel damage occurs as long as the fuel storage racks remain structurally intact.

Some spent fuel pool accident analyses take credit for operation of the spent fuel building's ventilation system. This system routes the building's exhaust air through filters, thus lowering the radiological dose to the public. At many plants, the ventilation system only performs this safety function when fuel handling operations are underway.

Spent fuel assemblies with cladding failures may have those failures propagate when subjected to earthquake forces. Radioactive gases released from spent fuel assemblies following an earthquake may cause radiological consequences which exceed those for the fuel handing event if (a) the inventory from more than the fuel rods in two assemblies is released, or (b) credit is taken in the fuel handling event analysis for operation of the spent fuel building's ventilation system but the system is unavailable. Consequently, the answer to this criterion is MAYBE.

- Criterion 3: May the margin of safety as defined in the basis for any technical specification be reduced by operation with failed fuel cladding?

The standard technical specifications prepared by Westinghouse, General Electric, Combustion Engineering, and Babcock & Wilcox (vendors for all of the operating plants in the United States) specify that "The fuel cladding must not sustain damage as a result of normal operation and [anticipated operational occurrences]."[40] The NRC considers fuel cladding to be damaged when its integrity is lost.[41] The detection of fission products *outside* the fuel rods is irrefutable evidence that fuel cladding integrity has been lost.

---

[39] Baltimore Gas & Electric Company, Calvert Cliffs Nuclear Plant Updated Final Safety Analysis Report, Section 14.18.2, "Method of Analysis [Fuel Handling Accident]."

[40] Babcock & Wilcox Company, Standard Technical Specifications, Section B 2.1.1., "Reactor Core SLs," Combustion Engineering, Standard Technical Specifications, Section B 2.1.1, "Reactor Core SLs," General Electric Company, BWR/4 Standard Technical Specifications, Section B 2.1.1, "Reactor Core SLs," and Westinghouse Electric Corporation, Standard Technical Specifications, Section B 2.1.1, "Reactor Core SLs."

[41] Nuclear Regulatory Commission, NUREG-0800, Standard Review Plan, Section 4.2, "Fuel System Design."

Attachment 1
Unreviewed Safety Question Assessment

The standard technical specifications are the templates from which individual plant operating licenses are derived. Since these specifications establish zero defects as the minimally acceptable standard, operation with fuel cladding failures clearly represents a safety margin reduction. Consequently, the answer to this question appears is YES.

Conclusion

Federal regulations specify that an unreviewed safety question is indicated when the answer to any one of the criteria is non-negative. UCS's assessment determined that none of the answers is negative. Three of the answers are unequivocally YES and a fourth is MAYBE. Thus, nuclear power plant operation with failed fuel cladding is clearly an unreviewed safety question. NRC approval is required for a plant to continue operating with fuel cladding failures.

Performed by: David A. Lochbaum 04-02-98

David A. Lochbaum
Nuclear Safety Engineer

Figure 1
Fuel Rod Schematic

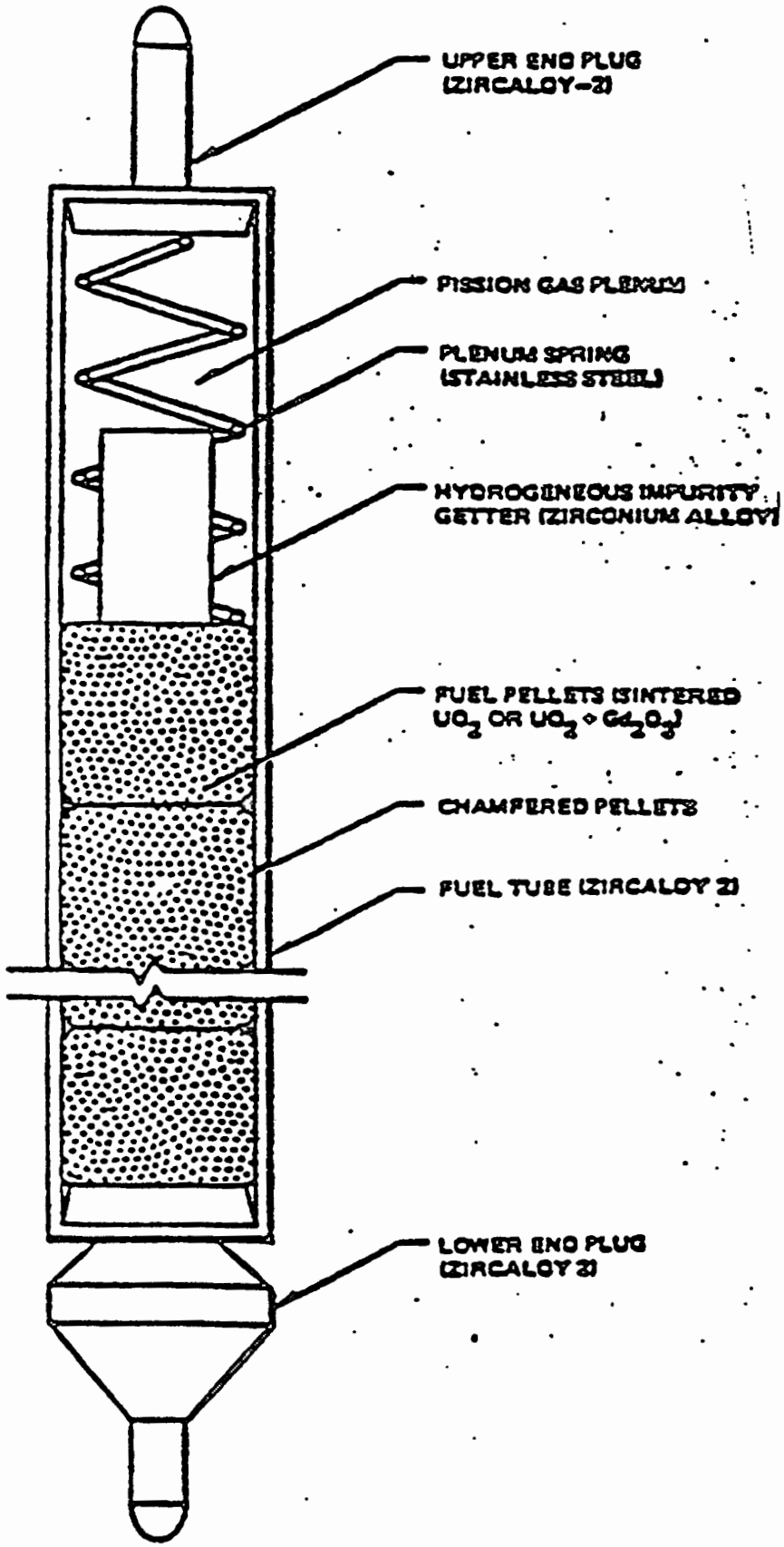

Figure 2
Fuel Assembly Schematic

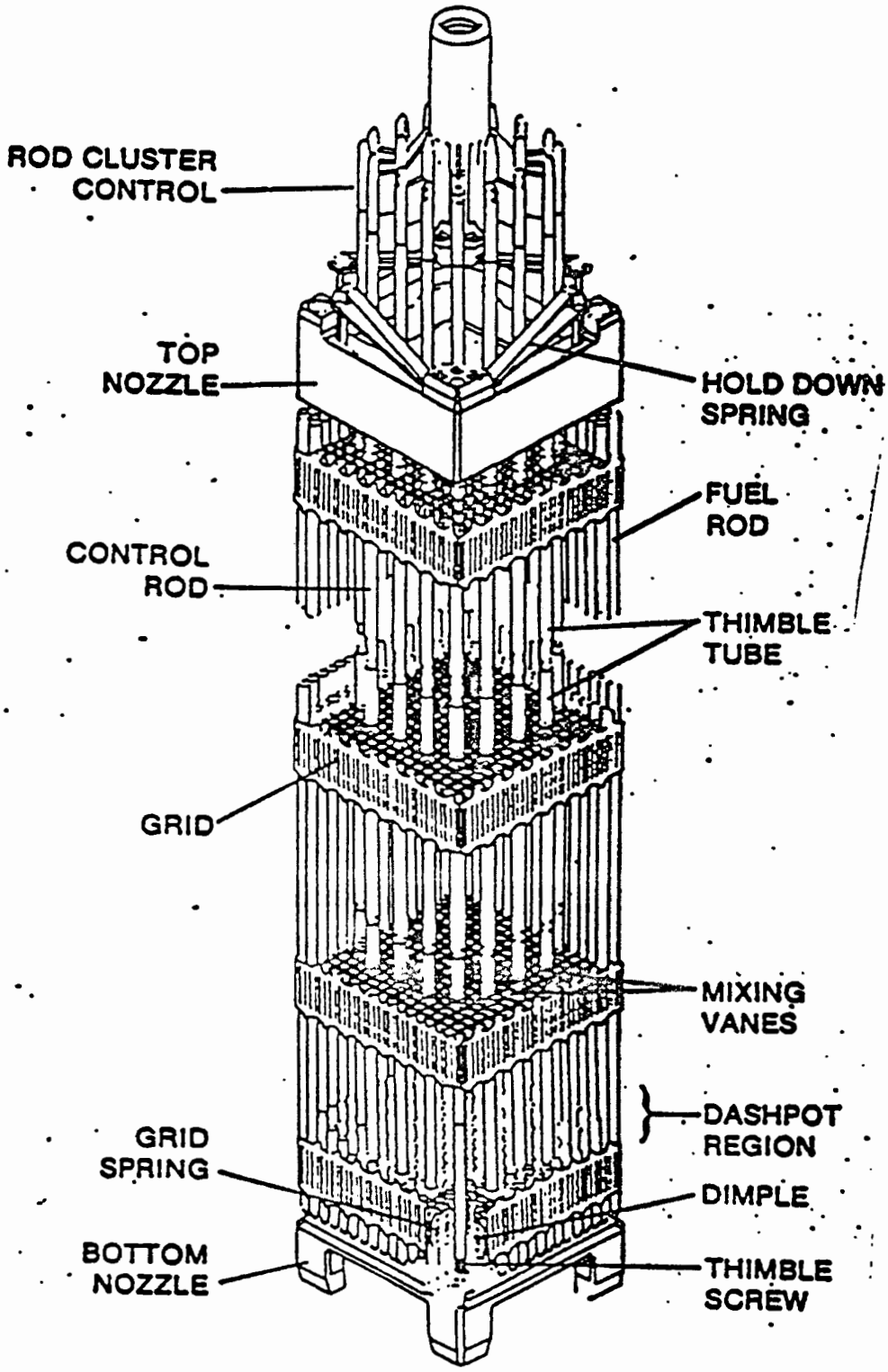

Figure 3
Defense-in-Depth Barriers