CHAPTER 15: ACCIDENT ANALYSIS

15.0 GENERAL

The original Final Safety Analysis Report (FSAR) was submitted in support of the Detroit Edison Company's (Edison) application for a license to operate Fermi 2, a 3293-MWt nuclear power plant, at the Enrico Fermi Atomic Power Plant site on the western shore of Lake Erie, at Lagoona Beach, Monroe County, Michigan. The Updated Final Safety Analysis Report (UFSAR) was prepared in response to 10 CFR 50.71(e).

The design power rating (emergency core cooling system [ECCS] design basis) for Fermi 2 is 3486 MWt, with a turbine-generator design gross electrical output at the generator terminals of 1235 MWe and a net electrical output of approximately 1170 MWe.

On September 9, 1992, the NRC issued Amendment 87 to the Fermi 2 operating license authorizing a change in the thermal power limit from 3293 MWt to 3430 MWt, a 4.2 percent increase in thermal power (References 1 and 2). This changed the new electrical capacity from 1093 MWe to 1139 MWe, or an increase of 46 MWe.

During RF05 the LP Steam Path was replaced by a GE designed LP Steam Path with a higher efficiency. This changed the designed net electrical capacity from 1139 MWe to 1150 MWe, or an increase of 11 MWe.

During RFO7, the HP Steam Path was replaced by a GE designed HP Steam Path with a higher efficiency. However, the gross generator output will not exceed the present 1217 MWe.

The Fermi Power Uprate Program followed the GE Nuclear Energy guidelines and evaluations for BWR power plants (References 3, 4 and 5).

Fermi 2 specific analyses and evaluations were performed, consistent with the generic guidelines, for systems and components that might be affected to ensure their capability to support the increase in power output and steam flow. Since the analyses are described in detail in the UFSAR, revisions have been made to reflect power uprate, as appropriate.

Cycle 3 was used as the representative fuel cycle for power uprate. The radiological consequences were calculated for the transient and accident analyses as applicable. Direct or statistical allowance for 2 percent power uncertainty was included in the analysis. The data has been updated for Cycle 7 fuel. Since the radiological consequences for Cycle 3 are bounding, the base calculations remain unchanged.

For Fermi 2, the limiting events for each limiting transient category were analyzed to determine their sensitivity to core flow, feedwater temperature, and cycle exposure. The results of these analyses developed the new licensing basis for transient analyses at uprated power. No changes to the basic characteristics for any of the limiting events were caused by power uprate.

The radiological doses resulting from several postulated accidents were reanalyzed for uprated conditions using methods recommended in the NRC Standard Review Plan (NUREG-0800, Chapter 15). The whole body dose and thyroid dose at the exclusion area, low population zone and, where appropriate, for the main control room were calculated.

In addition, feedwater line break, Section 15.6.6, air ejector line break, Section 15.7.1, liquid and solid radwaste system failure, Section 15.7.3, and gaseous radwaste failure, Section 15.11 were evaluated for impact due to power uprate. The feedwater line break is not affected by power uprate since it was analyzed based upon Technical Specification radiation levels which are not changing. The other accidents (originally analyzed based on a reactor thermal power level of 3430 MWt) were conservatively reanalyzed assuming a 2 percent increase in radiation releases which results in only minor increases in dose.

The results from all the reanalyses are significantly below the 10 CFR 100 guidelines and confirm the validity of the generic evaluation conclusions in Reference 3.

Fermi 2 has chosen to reanalyze the radiological consequences associated with a fuel handling accident, Section 15.7.7, and the design basis loss of cooling accident, Section 15.6.5, utilizing the guidance in Regulatory Guide 1.183, *Alternative Radiological Source Terms for Evaluating Design Basis Accidents at Nuclear Power Reactors*. The guidelines of 10 CFR 50.67 are applicable to the radiological consequences of these accidents. The results from these analysis are below the 10 CFR 50.67 guidelines.

On February 10, 2014, the NRC issued Amendment 196 to the Fermi 2 operating license authorizing a change in the thermal power limit from 3430 MWt to 3486 MWt, a 1.64 percent increase in thermal power and a 1.88 percent increase in steam flow. This changed the net electrical capacity from 1150 MWe to approximately 1170 MWe (Reference 13). This power uprate was performed in accordance with 10 CFR 50, Appendix K and reflects the improvement in feedwater flow measurement. The Fermi 2 Measurement Uncertainty Recapture (MUR) power uprate followed the GE generic guidelines and evaluations for BWR plants provided in GEH Topical Report NEDC-32938P-A, "Generic Guidelines and Evaluations for General Electric Boiling Water Reactor Thermal Power Optimization," Revision 2, May 2003 (Reference 18). The analyses performed at 102% of the pre-MUR licensed thermal power (3430 MWt) remain applicable at the MUR uprated thermal power (3486 MWt) because the 2% uncertainty factor discussed in Regulatory Guide 1.49 is effectively reduced by the improvement feedwater flow measurements.

In general, the Hydrogen Water Chemistry (HWC) system does not affect any of the events analyzed in chapter 15. It is not an initiator for these events, nor is it required to mitigate any of these events or to shut down the reactor or any systems. Any accident or transient which results in a reactor scram, offgas trip, or a loss of power, will automatically shut down the HWC system. Once the HWC system is stopped, then the rest of the event proceeds as described in the following sections of chapter 15. The presence of the HWC system will not affect the offsite radiological consequences of any of the analyzed events primarily due to the short half-life of isotope N-16. After two minutes (approximately 15 half lives), any potential N-16 source will have decayed to insignificant levels. Since the transport time out to a building stack and then to the site boundary is typically greater than two minutes, the offsite dose consequences are negligible, when compared to the other potentially-released isotopes. Therefore, the increased N-16 levels caused by HWC operation will not affect any of the accidents described herein.

Chapter 15 through Section 15.8 is presented in the format of Regulatory Guide 1.70, Revision 2 (Reference 6). This was the standard method chosen by GE to present the accident analysis for all safety analysis reports circa 1975. The analyses included in Sections

15.9 through 15.16, with the exception of 15.11, were not reanalyzed for power uprate because they were no longer required by Revision 2/3 of the Regulatory Guide, nor are they presently required by the Standard Review Plan, NUREG-0800.

The safety analysis is based on the General Electric (GE) report, General Electric Standard Application for Reactor Fuel (GESTAR II), described in Reference 7. GESTAR II represents generic information relative to the GE fuel design and analysis and consists of a description of the fuel design and fuel thermal-mechanical, nuclear, and thermal-hydraulic analyses bases. It provides information and methods used to determine reactor limits that are independent of a plant-specific application. Plant-specific information and the transient and accident methods used are given in the United States supplement. Proposed changes to GESTAR II are submitted to the appropriate regulatory body for review and approval. A listing of NRC approved amendments are provided in GESTAR II. All approved changes are incorporated as a revision to the text.

The postulated most limiting transients and accidents were analyzed, consistent with the fuel design, as described in Chapter 4. This Chapter examines the effects of anticipated process disturbances and postulated component failures to determine their consequences and to evaluate the capability built into the plant to control or accommodate such failures and events.

The scope of the situations analyzed includes anticipated operational occurrences (AOOs) (expected) (e.g., loss of electrical load), off-design abnormal (unexpected) transients that induce system operations condition disturbances, postulated accidents of low probability (e.g., the sudden loss of integrity of a major component), and finally hypothetical events of extremely low probability (e.g., an anticipated transient without the operation of the entire control rod drive system).

The Fermi 2 design is intended to be valid for the licensed life of the plant. The supplemental cycle-specific safety analysis assures that the plant can be operated safely and not pose any undue risk to the health and safety of the public. This is accomplished by demonstrating that radioactive releases from the plant for normal operation, AOOs, and postulated accidents meet applicable regulations.

Fermi 2 plant operation must meet various safety requirements defined in the Code of Federal Regulations. To evaluate the safety impact, fuel lattice physics calculations and 3-D simulation, transient, and accident evaluations were performed. The NRC approved methodologies described in GESTAR II were used to license the following combination of operating states (References 2 and 8 through 13):

a. Operation in the maximum extended operating domain with both the turbine bypass and moisture separator reheater in service

b. Operation in the maximum extended operating domain with either the turbine bypass or moisture separator reheater out-of-service

c. Operation in the maximum extended operating domain with both the turbine bypass and moisture separator reheater out-of-service.

Operation in the extended domain includes the maximum extended load line limit region and increased core flow with flow between 83 percent and 105 percent of rated flow at rated power (3486 MWth); feedwater heaters out-of-service and final feedwater temperature

reduction with feedwater temperature between -50°F and +5°F of rated; and single loop operation.

The core-wide nuclear and thermal reactivity characteristics when combined with the rest of the plant systems and equipment determines the normal steady-state operation, transient and accident performance of the plant.

The performance of the anticipated operational occurrences (moderate frequency events) were evaluated with the methodologies described in GESTAR II. The limiting events analyzed are determined by a sensitivity study described in Reference 7 that examines the impact of minimum critical power ratio (MCPR) due to the change in fuel design. Based on results of the study, several limiting events have been identified and analyzed using the appropriate input parameters. The MCPR results of these limiting transients form the basis of the MCPR operating limits. Implementation of these MCPR operating limits in the Core Operating Limits Report ensures that the MCPR safety limit for normal conditions (dual loop operation) and for single loop operation will not be exceeded during the most severe anticipated operational occurrences.

15.0.1 Analytical Objective

The spectrum of postulated initiating events is divided into categories based on the type of disturbance and the expected frequency of the initiating occurrence; the limiting events in each combination of category and frequency are quantitatively analyzed. The plant safety analysis evaluates the ability of the plant to operate within regulatory guidelines, without undue risk to the public health and safety.

15.0.2 Analytical Categories

Transient and accident events contained in this report are discussed in individual categories as required by Reference 6. The cycle-specific input parameters and results of the events are summarized in Tables 15.0-1, 15.0-2, and 15.0-3. Each event evaluated is assigned to one of the following applicable categories.

a. Decrease in Core Coolant Temperature

   Reactor vessel water (moderator) temperature reduction results in an increase in core reactivity. This could lead to fuel cladding damage

b. Increase in Reactor Pressure

   Nuclear system pressure increase threatens to rupture the reactor coolant pressure boundary (RCPB). Increasing pressure also collapses the voids in the core moderator, thereby increasing core reactivity and power level which threaten fuel cladding due to overheating

c. Decrease in Reactor Core Coolant Flow Rate

   A reduction in the core coolant flow rate threatens to overheat the cladding as the coolant becomes unable to adequately remove the heat generated by the fuel

d. Reactivity and Power Distribution Anomalies

Transient events included in this category are those that cause rapid increases in power due to increased core flow disturbance events. Increased core flow reduces the void content of the moderator, increasing core reactivity and power level

e. Increase in Reactor Coolant Inventory

Increasing coolant inventory could result in excessive moisture carryover to the main turbine, feedwater turbines, etc.

f. Decrease in Reactor Coolant Inventory

Reductions in coolant inventory could threaten the fuel as the coolant becomes less able to remove the heat generated in the core

g. Radioactive Release From a Subsystem or Component

Loss of integrity of a radioactive containment component is postulated

h. Anticipated Transients Without Scram (ATWS)

Anticipated transient without scram (ATWS) means an anticipated operational occurrence (e.g., loss of power to all recirculation pumps, tripping of the turbine generator set, isolation of the main condenser, loss of all offsite power, etc.) followed by the failure of the reactor trip portion of the protection system. The systems used to mitigate the postulated ATWS events are recirculation pump trip (RPT), alternate rod insertion (ARI), and standby liquid control (SLC). These systems are required to meet 10 CFR 50.62.

15.0.3 Event Evaluation

15.0.3.1 Identification of Causes and Frequency Classification

Situations and causes that lead to the analyzed initiating events are described within the categories designated above. The frequency with which each event occurs is summarized on the basis of available operating plant history for the transient event. Events for which inconclusive data exist are discussed separately within each event section.

Each initiating event within the major groups is assigned to one of the following frequency groups:

a. Incidents of moderate frequency - incidents that may occur during a calendar year to once per 20 years for a particular plant. These events are referred to as anticipated (expected) operational transients

b. Infrequent incidents - incidents that may occur during the life of the particular plant (spanning once in 20 years to once in 100 years). These events are referred to as abnormal (unexpected) operational transients

c. Limiting faults - occurrences that are not expected to occur but are postulated because their consequences may result in the release of significant amounts of

radioactive material. These events are referred to as design basis (postulated) accidents.

15.0.3.1.1 Unacceptable Results for Incidents of Moderate Frequency (Anticipated [Expected] Operational Transients)

The following are considered unacceptable safety results for incidents of moderate frequency (anticipated operational transients):

a. A release of radioactive material to the environs that exceeds the limits of 10 CFR 20

b. Reactor operation induced fuel cladding failure

c. Nuclear system stresses in excess of those allowed for the transient classification by applicable industry codes

d. Containment stresses in excess of those allowed for the transient classification by applicable industry codes.

15.0.3.1.2 Unacceptable Results for Infrequent Incidents (Abnormal [Unexpected] Operational Transients)

The following are considered unacceptable safety results for infrequent incidents (abnormal operational transients):

a. Release of radioactivity that results in dose consequences that exceed a small fraction of 10 CFR 100

b. Fuel damage that would preclude resumption of normal operation after a normal restart

c. Generation of a condition that results in consequential loss of function of the reactor coolant system

d. Generation of a condition that results in a consequential loss of function of a necessary containment barrier.

15.0.3.1.3 Unacceptable Results for Limiting Faults (Design Basis [Postulated] Accidents)

The following are considered unacceptable safety results for limiting faults (design basis accidents):

a. Radioactive material release that results in dose consequences that exceed the guideline values of 10 CFR 100 or 10 CFR 50.67 for DBA-LOCA and fuel handling accident

b. Failure of fuel cladding that cause changes in core geometry, such that core cooling would be inhibited

c. Nuclear system stresses in excess of those allowed for the accident classification by applicable industry codes

d. Containment stresses in excess of those allowed for the accident classification by applicable industry codes when containment is required

e. Radiation exposure for limiting faults other than DBA-LOCA or fuel handling accident to plant operations personnel in the main control room in excess of 5 rem whole body, 30 rem inhalation, and 75 rem skin

f. Radiation exposure to operations personnel in the main control room in excess of 5 rem TEDE.

15.0.3.2 Sequence of Events and Systems Operations

Each transient or accident is discussed and evaluated in terms of the following.

a. A step-by-step sequence of events from initiation to final stabilized condition

b. The extent to which normally operating plant instrumentation and controls are assumed to function

c. The extent to which plant and reactor protection systems are required to function

d. The credit taken for the functioning of normally operating plant systems

e. The operation of engineered safety systems that are required.

In analyzing anticipated operational transients, some non safety grade pieces of equipment are assumed to operate. The most limiting transient that takes credit for this equipment is the excess feedwater event. The plant operating equipment that plays a significant role in mitigating this event (feedwater controller failure, open to maximum demand; Subsection 15.1.2) is the turbine bypass system and the Level 8 high water level trip (closes turbine stop and control valves). To ensure an acceptable level of performance for Fermi 2, surveillance requirements for both the bypass valves and feedwater Level 8 trip are included in the Technical Specifications.

15.0.3.2.1 Single Failures or Operator Errors

This subsection discusses a very important concept pertaining to the application of single failure and operator error analyses of the postulated events. Single active component failure criteria have been required and successfully applied on past NRC approved docket applications to design basis accident categories only. Reference 6 implies that a single failure and operator error requirement should be applied to transient events (high, moderate, and low probability occurrences) as well as accident (very low probability) situations.

Although Fermi 2 may well be able to tolerate the application of single failures or operator errors to transient events, this analysis does not consider such failures. At the time the construction permit for Fermi 2 was issued, such analyses were not a requirement.

The transients and accidents in this Chapter have been evaluated by the more restrictive old allowances and limits than those of the event categorization presently in effect. Most events postulated for consideration are the results of single equipment failures or single operator errors that have been postulated during any normal or planned mode of plant operation. The types of operational single failures and operator errors considered as initiating events are identified in Subsection 15.0.3.2.2.

Accidents Events. For accidents analyzed, all immediate short term functions are automatic. No operator action is therefore required to mitigate the event consequences for the first 10 minutes. Ten minutes has been judged to be ample time for an operator to assess the situation, determine trends of temperature and pressure, and decide whether containment cooling or suppression pool cooling should be initiated, or whether some other action is more appropriate.

For ECCS evaluation, the post accident period during which no credit is taken for operator action was selected to be 20 minutes, because 20 minutes allows more than enough time for the automatic emergency core cooling systems to have initiated their design function. Specific operator actions would depend on the extent of the primary system break, but in no case is action required in less than 10 minutes, and in general, a longer time (20 minutes or more) would likely be available (Subsection 6.3.2.15.1).

The possible variables that must be considered after the reactor water level has been automatically restored to a safe condition can best be judged and acted upon by trained, licensed operators using information displayed in the control room in conjunction with symptom oriented emergency procedures and guidelines. Because of the large number of variables to be considered, the operator should not be bound to respond to prescriptive instructions, but will respond to the symptoms as they exist.

Operational Transient Events. For all operational transients, no operator action is required to prevent the fuel from exceeding safety design basis limits.

Operator action is expected and used in order to

a. Maintain the plant in a steady-state condition

b. Initiate safe and orderly shutdown.

If the operator is unsuccessful in achieving normal plant status, he will be guided by the symptom oriented emergency procedures that are developed from the BWR Owners Group generic guidelines submitted to the NRC.

Effect of Single Failures or Operator Errors

Accident Events. The effect of single failures or operator errors has been considered in analyzing postulated accidents. Accidents involving an entire spectrum of primary system breaks are covered in Section 6.3.

Operational Transient Events. The use of the single failure or operator error criteria has not been a design basis requirement for Fermi 2. However, information provided to address Item II.K.3.44 of NUREG-0737 demonstrates that, for Fermi 2, adequate core cooling is maintained for any operational transient with the worst single failure.

The generic analysis performed by GE (Reference 14) for the BWR Owners Group of the adequacy of core cooling for transients with single failure is applicable to Fermi 2.

The anticipated transients in Regulatory Guide 1.70, Revision 3, were reviewed from a core cooling viewpoint. The loss of feedwater event was identified to be the most limiting transient that would challenge core cooling. The BWR is designed so that the high pressure makeup or inventory maintenance systems or heat removal systems are independently capable of maintaining the water level above the top of the active fuel given a loss of

feedwater. The detailed analyses showed that even with the worst single failure in combination with the bounding loss of feedwater event, the core still remains covered.

Even with more degraded conditions involving four stuck open relief valves in addition to the worst transient with the worst single failure, studies showed that the core remains covered and adequate core cooling is available during the whole course of the transient. It has been concluded that for Fermi 2 anticipated transients (including transients that result in a stuck open relief valves) combined with the worst single failure and assuming proper operator actions, the core remains covered.

15.0.3.2.2 Initiating Events

The following types of operational single failures and operator errors are considered as initiating events.

a. The undesired opening or closing of any single valve (a check valve is not assumed to close against normal flow)

b. The undesired starting or stopping of any single component

c. The malfunction or maloperation of any single control device

d. Any single electrical component failure

e. Any single operator error.

Operator error is defined as an active deviation from written operating procedures or nuclear plant standard operating practices. A single operator error is the set of actions that is a direct consequence of a single erroneous decision. The set of actions is limited as follows:

a. Those actions that could be performed by one person

b. Those actions that would have constituted a correct procedure had the initial decision been correct

c. Those actions that are subsequent to the initial operator error and have an effect on the designed operation of the plant, but are not necessarily directly related to the operator error.

Examples of single operator errors are as follows:

a. An increase in power above the established flow control power limits by control rod withdrawal in the specified sequences

b. The selection and complete withdrawal of a single control rod out of sequence

c. An incorrect calibration of an average power range monitor

d. Manual isolation of the main steam lines as a result of operator misinterpretation of an alarm or indication.

15.0.3.3 Core and System Performance

15.0.3.3.1 Introduction

Section 4.4, Thermal and Hydraulic Design, is a description of the various fuel failure mechanisms. Avoidance of unacceptable results 1 and 2 for incidents of moderate frequency is verified statistically with consideration given to data, calculation, manufacturing, and operating uncertainties. An acceptable criterion was determined to be that 99.9 percent of the fuel rods in the core would not be expected to experience boiling transition (see Reference 1). This criterion is met by demonstrating that transients do not result in a minimum critical power ratio (MCPR) of less than the Safety Limit Minimum Critical Power Ratio (SLMCPR) as stated in the Technical Specifications. (Initial core SLMCPR was 1.06)

The steady-state operating limit is determined as follows:

a. The change in the critical power ratio, ΔCPR, that would result in the safety limit CPR value is calculated for each event. These calculations use the most limiting axial power shape and the results represent the most limiting ΔCPRs for the allowable operating range (e.g. maximum extended load line limit analysis, increased core flow, partial feedwater heating, single loop operation, and various equipment out of service). The results are exposure and fuel type dependent.

b. For nonpressurization events, the ΔCPR value is added to the safety limit CPR value to obtain the event based minimum CPR, MCPR.

c. For pressurization events the MCPR is determined by the safety limit CPR and the ΔCPR in conjunction with correction factors. The correction factors are explained in Subsection 4.4.4.1.

The results are given in Tables 15.0-2 and 15.0-3 for the limiting transients.

The operating limit MCPR is the maximum value of the event based MCPRs calculated from the transient analysis. Maintaining the MCPR operating limit at or above this operating limit ensures that the safety limit CPR is never violated.

Section 4.4 describes the various fuel failure mechanisms and establishes fuel damage limits for various plant conditions. Avoidance of fuel cladding damage and release of radioactive material in excess of 10 CFR 100 or 10 CFR 50.67 (as applicable) limits during or as a result of abnormal operational transients is verified by demonstrating that abnormal operational transients do not result in a MCPR of less than safety limit CPR. If the MCPR remains above the safety limit CPR, no fuel failures result from the transient, and thus the radioactivity released from the plant cannot be increased over the operating conditions existing prior to the transient. Maintaining a MCPR greater than safety limit CPR is a sufficient but not a necessary condition to ensure that no fuel damage occurs. This is discussed in Section 4.4.

Avoidance of catastrophic failure of fuel cladding in design basis accidents is shown by demonstrating that fuel cladding temperatures remain below the fragmentation temperature of 2200°F or fuel enthalpies remain below 280 cal/g (Subsection 4.3.3).

For situations in which fuel damage is sustained, the extent of damage is determined by correlating fuel energy content, cladding temperature, fuel rod internal pressure, and cladding mechanical characteristics.

These correlations are substantiated by fuel rod failure tests and are discussed in Section 4.4, Thermal and Hydraulic Design, and Section 6.3, Emergency Core Cooling Systems.

15.0.3.3.2 Input Parameters and Initial Conditions for Analyzed Events

In general, the events analyzed have values for input parameters and initial conditions as specified in Table 15.0-1. Analyses which assume data inputs different than these values are designated accordingly in the appropriate event discussion.

15.0.3.3.3 Initial Power/Flow Operating Constraints

The analyses basis for most of the transient safety analyses is the rated thermal power at 105 percent rated core flow. This operating point is the apex of a bounded operating power/flow map which, in response to classified anticipated operational occurrences (AOOs), will yield the minimum thermal margins of any operating point within the bounded map.

Any other constraint which may truncate the bounded power/flow map must be observed, such as the recirculation valve and pump cavitation regions, the licensed power limit and other restrictions such as pressure and thermal margin criteria.

The upper operating power/flow limit of a reactor is predicated on the operating basis of the analysis and the corresponding constant rod pattern line. This boundary may be truncated by the licensed power and the MCPR operating limit.

Certain localized events are evaluated at other than the above mentioned conditions. These conditions are discussed as they pertain to the appropriate event.

15.0.3.3.4 Evaluation of Results

The results of the transient analyses are provided for each event and the critical parameters are shown in Table 15.0-2 (peak neutron flux, heat flux, and MCPR responses). The transient responses for these events are presented in respective figures. The MCPR values provided in Table 15.0-3 are used to generate the operating limit MCPR values for the licensed operating states in the Core Operating Limits Report (COLR). COLR presents these limits as a function of assumed scram speed.

In order to address all of the credible transient events in these eight analytical categories (refer to Subsection 15.0.2), the transients were based on the analysis of a spectrum of approximately 25 events, assignable to one of these categories. The relative and absolute severity of the consequences of the events are generally plant-specific and often cycle-specific as well. Most of the events result in fairly mild plant disturbances. Thus, only a few events are severe enough to be potentially limiting. Furthermore, although the most limiting event may differ from plant to plant and reload to reload, it is General Electric's experience that the most limiting transients can always be expected to come from the same selected group of transient events. Therefore, most of the events analyzed need not be reanalyzed or

reassessed for cycle-specific core licensing application. The selected group of limiting events consists of:

a. Generator Load Rejection (without bypass),

b. Turbine generator trip (without bypass), and

c. Feedwater controller failure

Subsequent AOO analyses verified the results of the above sensitivities. Descriptions of the typical analyses performed for the above limiting events are discussed in the following subsections.

15.0.3.3.4.1 Analysis Uncertainties

Model uncertainties are documented in Chapter 4, Subsection 4.4.4.1.2.6.

15.0.3.4 Barrier Performance

This section primarily evaluates the performance of the reactor coolant pressure boundary (RCPB) and the containment system during transients and accidents. During transients that occur with no release of coolant to the primary containment, only RCPB performance is considered. If release to the primary containment occurs, as in the case of limiting faults, then challenges to the primary containment are evaluated as well. Similarly, if the release occurs outside the primary containment, as in the case of limiting faults, then the challenges to the secondary containment (reactor building) are evaluated (Subsection 3.6.2).

Avoidance of excessive RCPB stresses during abnormal operational transients and accidents is assessed by comparing peak internal pressure with the overpressure transient allowed by the applicable industry code. The only significant areas of interest for internal pressure damage are the high pressure portions of the nuclear system primary barrier (the reactor pressure vessel (RPV) and the high pressure pipelines attached to the RPV). The overpressure, below which no damage can occur, is taken as the pressure increase over design pressure allowed by the ASME Boiler and Pressure Vessel (B&PV) Code Section III, Class 1. This code permits pressure transients up to 10 percent over design pressure (1375 psig = 110 percent x 1250 psig). It can be concluded that the high pressure portion of the nuclear system process barrier meets the design requirement if peak nuclear system pressure remains below 1375 psig.

An analysis performance measurement, discussed in Subsection 4.3.3, is used to evaluate whether nuclear system process barrier damage occurs as a result of reactivity accidents. If peak fuel enthalpy remains below 280 cal/g, no nuclear system process barrier damage results from nuclear excursion accidents.

Containment Damage

Containment integrity during accidents is maintained by ensuring that containment stresses do not exceed those allowed for accidents by applicable industry codes (ASME B&PV Code Section III, Class B, Nuclear Vessel 1968, including 1969 Summer Addenda).

Radioactive Barrier Mechanical Design

Design basis accidents are used in determining the sizing and strength requirements of many of the essential nuclear system components. Comparing accidents considered in this section with those used in the mechanical design of equipment reveals that either the applicable accidents are the same or that the accident in this section results in less severe stresses than those assumed for mechanical design. Damage to any of the radioactive material barriers, as a result of accident initiated fluid impingement and jet forces, is considered in those parts of the UFSAR that describe the mechanical design features of systems and components.

15.0.3.5 Radiological Consequences

In this Chapter, the consequences of radioactivity release during the three types of events: (a) incidents of moderate frequency (anticipated operational transients), (b) infrequent incidents (abnormal operational transients), and (c) limiting faults (design basis accidents), are considered. For all events whose consequences are limiting, a detailed quantitative evaluation is presented. For nonlimiting events a qualitative evaluation is presented or results are referenced from a more limiting or enveloping case or event.

For limiting faults, 2 hr radiation doses were calculated for the site exclusion area boundary, and 30 day doses were calculated for the low population zone boundary. The calculated doses were compared against the NRC dose criteria set forth in 10 CFR 100 or 10 CFR 50.67, as applicable.. All of this work has been done according to guidelines issued over the years by the NRC and contained in various Regulatory Guides (e.g., 1.3, 1.4, 1.5, 1.25, 1.98 and 1.183). The maximum doses would result from a LOCA, and this was therefore the bounding accident (Subsection 15.6.5). Regulatory Guide 1.3 clearly states that its assumptions are acceptable to the NRC for use in evaluating the design basis LOCA for a BWR and in comparing the consequent doses against the 10 CFR 100 guidelines. The release of radioactivity and subsequent sources for the bounding accident are as indicated in Regulatory Guide 1.3. The source of offsite radioactivity for those accidents analyzed in accordance with Regulatory Guide 1.3 is the standby gas treatment system; estimates of releases from this system are based on the postulated primary containment leak rate of 0.5 percent per day.

Regulatory Guide 1.183 provides for selective evaluation of the radiological consequences of design basis accidents given that the accidents that were previously analyzed are completely superceded by the new analysis, completely reanalyzed utilizing the assumptions in Regulatory Guide 1.183, and that the results are within the limits of 10 CFR 50.67. The assumptions pertaining to Regulatory Guide 1.183 and the limits of 10 CFR 50.67 cannot be applied to any existing analysis. Therefore, the discussions of the radiological consequences of the accidents not analyzed in accordance with Regulatory Guide 1.183 remain unchanged. The sources of offsite radioactivity for accidents analyzed in accordance with Regulatory Guide 1.183 are leakage of ECCS piping and components that recirculate suppression pool water outside of primary containment, MSIV leakage, standby gas treatment system, and secondary containment bypass leakage.

The ECCS leakage is limited to a maximum of 5 gpm for the entire 30 days of the DBA LOCA. Two percent of the iodine is assumed to become airborne and is released as 97 percent elemental and 3 percent organic. The drywell and wetwell are projected to leak at

their design leakage of 0.5 percent of their atmospheric contents by weight for the first 24 hours and 0.25 percent of their atmospheric contents by weight for the remaining 29 days. No credit is taken for secondary containment draw down for 15 minutes after the 2 minute gap release. Secondary containment bypass leakage is limited to 10 percent of the primary containment leakage and is modeled as a ground release at the TBHVAC stack. Credit is not taken for deposition in the bypass leakage pathway. The MSIVs are projected to leak 250 scfh total (100 scfh maximum in one line) for the first 24 hours and 50 percent of that for the remaining 29 days. A portion of elemental and aerosol iodine is credited to plate out in the main steam piping. However, no credit is taken for deposition in the broken steam line upstream of the inboard MSIV. Credit is taken for the main steam piping to cool to increase the mechanism for iodine plate out.

15.0 GENERAL

REFERENCES

1. Letter from the Detroit Edison to USNRC, "Proposed License Amendment - Uprated Power Operation," NRC-91-0102, September 24, 1991.
2. Letter from the USNRC to Detroit Edison, "Amendment No. 87 to Facility Operating License No. NPF-43 (TAC No. M82102)," September 9, 1992.
3. GE Nuclear Energy, "Generic Guidelines for General Electric Boiling Water Reactor Power Uprate," Licensing Topical Report NEDC-31897P-1, Class III, (Proprietary), June 1991.
4. GE Nuclear Energy, "Generic Evaluations of General Electric Boiling Water Reactor Power Uprate," Licensing Topical Report NEDC-31984P, Volumes I and II, Class III, (Proprietary), July 1991.
5. GE Nuclear Energy, "Generic Evaluations of General Electric Boiling Water Reactor Power Uprate," Licensing Topical Report, NEDC-31984P, Supplement 1, Class III (Proprietary), October 1991.
6. U.S. Nuclear Regulatory Commission, "Standard Format and Content of Safety Analysis Report for Nuclear Power Plants, Light Water Reactor Edition," Regulatory Guide 1.70, Revision 2 (Draft for comment), September 1975.
7. General Electric Co., "General Electric Standard Application for Reactor Fuel, GESTAR II," NEDE-24011-P-A (Latest Approved Revision as identified in the COLR).
8. Letter from the USNRC to Detroit Edison, "Amendment No. 39 to Facility Operating License No. NPF-43: (TAC No. 67098)," September 1, 1989.
9. Letter from the USNRC to Detroit Edison, "Amendment No. 71 to Facility Operating License No. NPF-43: (TAC No. 77676)," May 1, 1991.
10. Deleted
11. Letter from the USNRC to Detroit Edison, "Amendment No. 53 to Facility Operating License No. NPF-43: (TAC No. 69074)," July 27, 1990.
12. Deleted
13. Letter from USNRC to DTE Electric, “Amendment No. 196 to Facility Operating License No. NPF-43 (TAC No. MF0650),” February 10, 2014.
14. BWR Owners Group, Additional Information Required for NRC Staff Generic Report on Boiling Water Reactors, NEDO-24708A, General Electric, December 29, 1980.
15. Global Nuclear Fuel, Supplemental Reload Licensing Report for Fermi 2 (Latest approved edition as identified in COLR).
16. Global Nuclear Fuel, Fuel Bundle Information Report for Fermi 2 (Latest approved edition as identified in COLR).
17. GE Nuclear Energy, Enrico Fermi Energy Center Unit 2 Single-Loop Operation, NEDC-32313P, September 1994.

REFERENCES

18. General Electric-Hitachi (GEH), "Generic Guidelines and Evaluations for General Electric Boiling Water Reactor Thermal Power Optimization," Licensing Topical Report NEDC-32938P-A, Revision 2 (Proprietary), May 2003.

TABLE 15.0-1 INPUT PARAMETERS AND INITIAL CONDITIONS FOR CYCLE DEPENDENT TRANSIENT ANALYSIS

1.	Thermal Power Level, MWt	3486
2.	Steam Flow, lb per hr	15.143×10^6
3.	Core Flow, lb per hr	105×10^6
4.	Feedwater Temperature, °F	426.5
5.	Vessel Dome Pressure, psia	1045
6.	Vessel Core Pressure, psia	1061
7.	Turbine Bypass Capacity, % NBR	23.5
8.	Core Coolant Inlet Enthalpy, Btu/lb	529.0
9.	Turbine Inlet Pressure, psia	981
10.	Fuel Lattice	GE14
11.	Required Operating Limit MCPR	Table 15.0-3
12.	MCPR Safety Limit	Tech Spec 2.1.1.2
13.	Scram Response, sec at Control Fraction %	
	0	0.2
	5	0.490
	20	0.9
	50	2.0
	90	3.5
14.	Safety/Relief Valve Capacity, PPH at 1090 psig	870000.0
15.	Number of Safety/Relief Valves	
	Installed	15
	Assumed	11
16.	Relief Function Delay, seconds	0.4

TABLE 15.0-1 INPUT PARAMETERS AND INITIAL CONDITIONS FOR CYCLE DEPENDENT TRANSIENT ANALYSIS

17.	Safety Function Stroke Time, seconds	0.10
18.	Setpoints for Safety/Relief Valves Safety/Function, psig	1169.1, 1179.4, 1189.7
19.	High Flux Trip, % NBR	124.4
20.	High Pressure Scram Setpoint, psig	1126
21.	Vessel level Trips, inches above vessel zero	
	Level 8 - (L8), inches	588.3
	Level 3 - (L3), inches	535
	Level 2 - (L2), inches	457.5
22.	APRM Simulated Thermal Power Scram Trip Setpoint, % NBR	119.54
23.	High Pressure Recirculation Pump Trip Pressure Setpoint, psig	1170
24.	Total Steamline Volume, ft^3	4737
25.	Reheater Bypass Flow, % NBR	8.0
		(Figures 15.0-2 and 15.0-3)

TABLE 15.0-2 SUMMARY OF CYCLE 18 TRANSIENT ANALYSIS

Section	Transient Event	Cycle Average Exposure (MWd/st)	Power/Flow (% Rated)	Assumed Out-of-Service Equipment or Offnormal Condition	Maximum Neutron Flux (% Rated)	Maximum Core Average.Heat Flux (% Rated)
15.1.1	Loss of Feedwater Heating	PHE	100/83	Feedwater heating reduction of 100F		
15.1.2	Feedwater Controller Failure to Maximum Demand	BOC-MOC1	100/105		189.9	106
15.1.2	Feedwater Controller Failure to Maximum Demand	MOC1-MOC2	100/105		218.5	107.7
15.1.2	Feedwater Controller Failure to Maximum Demand	MOC2-EOC	100/105		211.2	107.3
15.1.2	Feedwater Controller Failure to Maximum Demand	BOC-EOC	100/105	Turbine Bypass	337.4	111.4
15.1.2	Feedwater Controller Failure to Maximum Demand	BOC-EOC	100/105	Turbine Bypass Moisture Separator Reheater	394.1	112.5
15.2.2	Generator Load Rejection without Bypass	BOC-MOC1	100/105	Turbine Bypass	264.0	105.4
15.2.2	Generator Load Rejection Without Bypass	MOC1-MOC2	100/105	Turbine Bypass	330.1	107.0
15.2.2	Generator Load Rejection Without Bypass	MOC2-EOC	100/105	Turbine Bypass	323.9	106.8
15.2.2	Generator Load Rejection Without Bypass	BOC-EOC	100/105	Moisture Separator Reheater Turbine Bypass	388.0	107.8
15.4.2	Control Rod Withdrawal Error	PHE	100/100	RBM setpoint at 111 percent	-	-

Notes:

1. PHE is Peak Hot Excess reactivity.
2. Cycle Average Exposure is defined in the Supplemental Reload Licensing Report for BOC, MOC1, MOC2, and EOC. BOC is Beginning of Cycle and EOC is End of Cycle. MOC1 and MOC2 correspond to mid-cycle points where the MCPR operating limits are changed.
3. The Generator Load Rejection without Bypass is more limiting than the Turbine Trip without Bypass and the Feedwater Controller Failure with Bypass. The Feedwater Controller Failure without Bypass and without the Moisture Separator Reheaters is the most limiting Cycle 18 pressurization transient.

TABLE 15.0-3 CYCLE 18 OPERATING LIMIT MCPR VALUES

Transient Event	Applicable Cycle Average Exposure Range (MWd/st)	Applicable Flow at 100 % Power (% Rated)	Applicable Out of Service Equipment[A] and Operating Conditions	OLMCPR[B] Tau = 0	OLMCPR[B] Tau = 1	Limiting Transient
Loss of Feedwater Heating	BOC to EOC	83 to 105	Feedwater Heaters Final Feedwater Temperature Reduction – 50F	1.19	1.19	
Feedwater Controller Failure to Maximum Demand	BOC to EOC	83 to 105	Feedwater Heaters Final Feedwater Temperature Reduction – 50F Turbine Bypass	1.39	1.56	
Feedwater Controller Failure to Maximum Demand	BOC to EOC	83 to 105	Feedwater Heaters Final Feedwater Temperature Reduction – 50F Turbine Bypass Moisture Separator Reheaters	1.45	1.62	Yes
Generator Load Rejection without Bypass	BOC to MOC1	83 to 105	Turbine Bypass Feedwater Heaters Final Feedwater Temperature Reduction – 50F	1.24	1.41	Yes
Generator Load Rejection without Bypass	MOC1 to MOC2	83 to 105	Turbine Bypass Feedwater Heaters Final Feedwater Temperature Reduction – 50F	1.27	1.44	Yes
Generator Load Rejection without Bypass	MOC2 to EOC	83 to 105	Turbine Bypass Feedwater Heaters Final Feedwater Temperature Reduction – 50F	1.33	1.50	Yes
Generator Load Rejection without Bypass	BOC to EOC	83 to 105	Turbine Bypass Moisture Separator Reheaters Feedwater Heaters Final Feedwater Temperature Reduction – 50F	1.41	1.58	Yes
Control Rod Withdrawal Error	BOC to EOC	83 to 105	This event is independent of equipment out of service options	1.28	1.28	

A. The analysis either covers or is independent of the identified out-of-service equipment. The OLMCPR adequately bounds the operating condition with the identified out-of-service equipment. The turbine generator and load rejection events are required to be analyzed without the turbine bypass; therefore, this event still needs to be considered when operating with turbine bypass. Normal operation with or without operation of MEOD and Final Feedwater Temperature Reduction of 50F. The analysis bounds the operation with this out-of-service equipment for a total of 100F feed water temperature reduction.

B. The required OLMCPR values are generated utilizing GE GEMINI or TRACG methods. Statistical mean value distributed control rod scram times are used in the analysis. Event unique adders are used to generate the required OLMCPR for Tau = 0 and Tau = 1 scram times. Tau is defined in the Core Operating Limits Report.

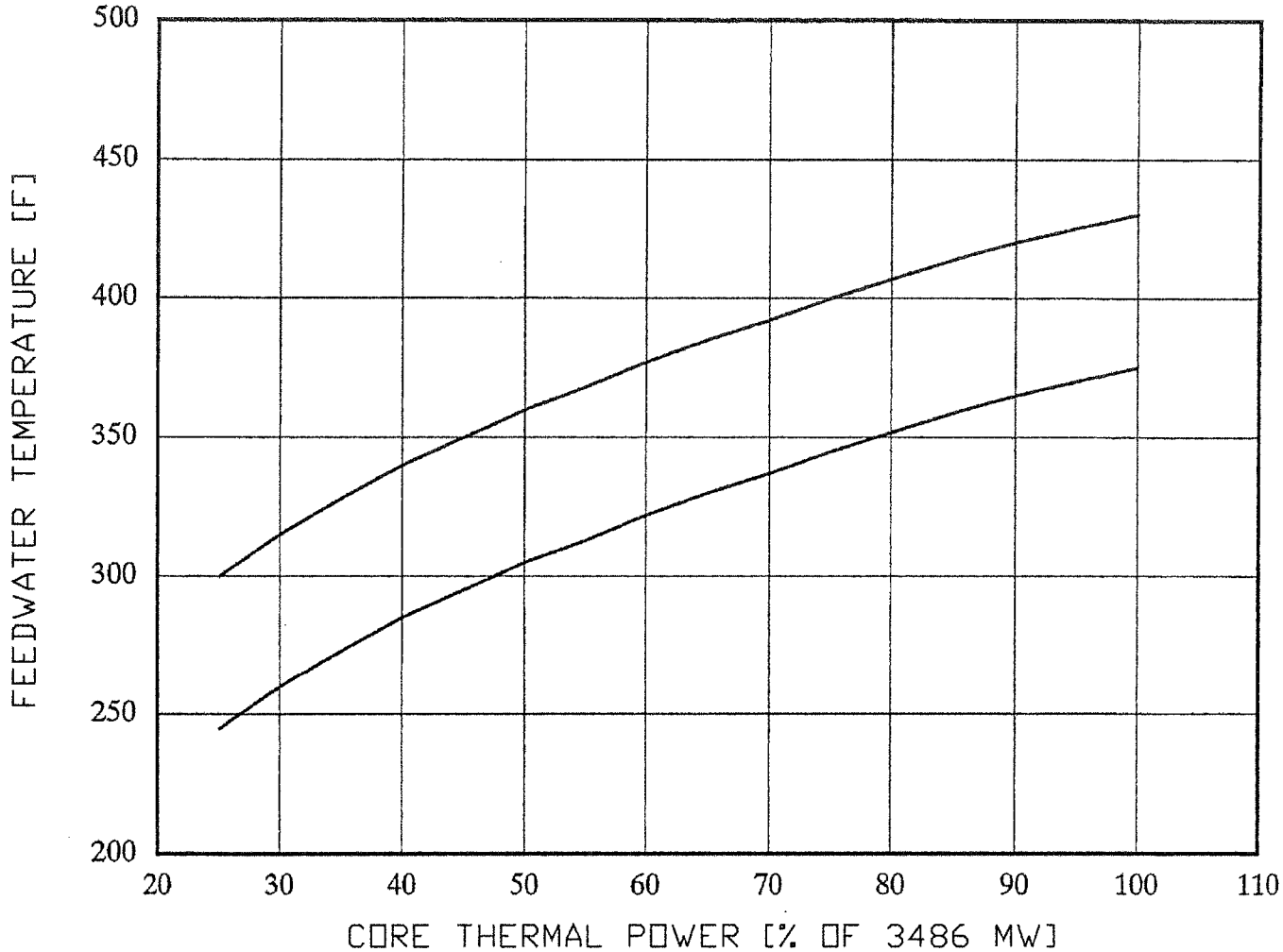

Fermi 2

UPDATED FINAL SAFETY ANALYSIS REPORT

FIGURE 15.0-1

TYPICAL FEEDWATER TEMPERATURE VERSUS POWER

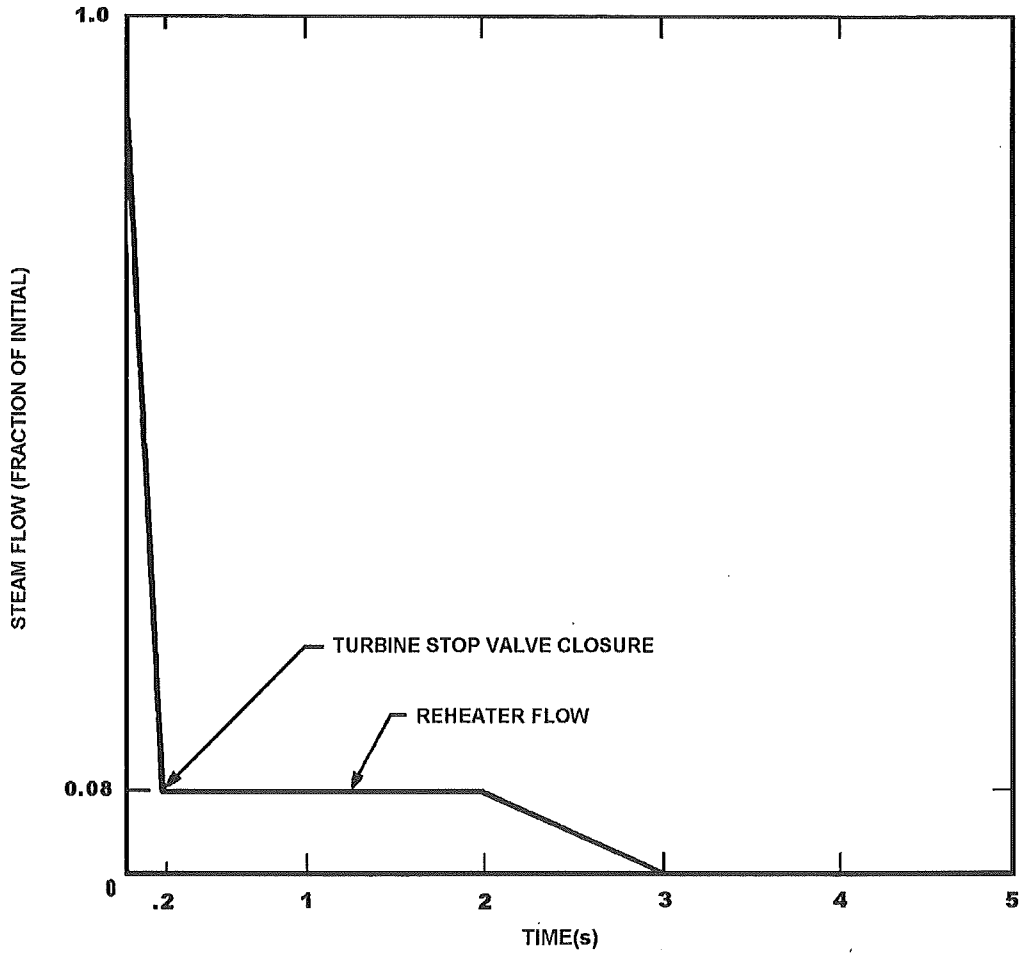

NOTE: The above reheater steam flow to the Moisture Separator Reheater (MSR) is conservatively estimated based on MSR effectiveness of 90% and 37°F temperature terminal difference (TTD) across the reheater.

Fermi 2

UPDATED FINAL SAFETY ANALYSIS REPORT

FIGURE 15.0-2

MAIN STEAM FLOW AFTER TURBINE TRIP
ALLOWING NO FLOW THROUGH BYPASS VALVES

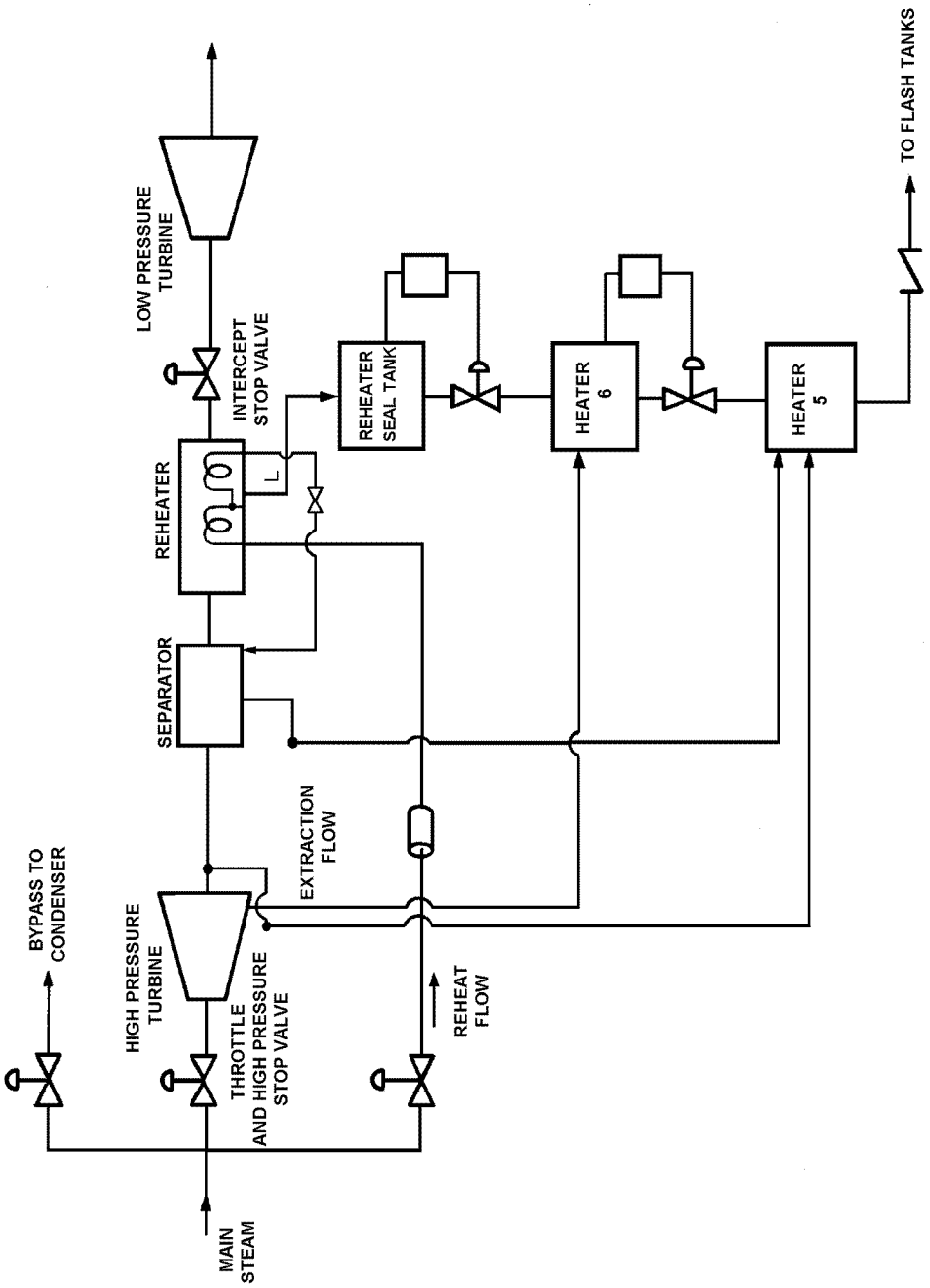

Fermi 2

UPDATED FINAL SAFETY ANALYSIS REPORT

FIGURE 15.0-3

REHEATER AND DRAINS SYSTEM

15.1 DECREASE IN REACTOR COOLANT TEMPERATURE

Four transients are evaluated under the decrease in reactor coolant temperature analytical category:

a. Loss of feedwater heating

b. Feedwater controller failure

c. Pressure regulator failure

d. Inadvertent safety relief valve opening.

Of the above identified transients, only feedwater controller failure and loss of feedwater heating transients have cycle specific analyses performed. A qualitative prescription of results is described for those events determined to be nonlimiting from a core performance standpoint.

15.1.1 Loss of Feedwater Heating

15.1.1.1 Identification of Causes and Frequency Classification

15.1.1.1.1 Identification of Causes

A feedwater heater can be lost in at least two ways:

a. Steam extraction line to the heater is closed

b. Feedwater is bypassed around the heater.

The first case produces a gradual cooling of the feedwater. In the second case, the feedwater bypasses the heater and no heating of the feedwater occurs. In either case, the reactor vessel receives cooler feedwater. The maximum number of feedwater heaters that can be tripped or bypassed by a single event represents the most severe transient for analysis considerations. This event has been conservatively estimated to incur a loss of up to 100°F of the feedwater heating capability of the plant and causes an increase in core inlet subcooling. This increases core power due to the negative void reactivity coefficient.

The design basis of the loss of feedwater heating event requires that no single failure or operator action can result in a loss of more than 100°F in feedwater inlet temperature. Therefore, the existing transient is conservative for Fermi 2.

The single failure or operator error event that could cause the greatest reduction in feedwater temperature is the inadvertent bypassing of half the feedwater flow around Heaters 3, 4, and 5. There are two separate parallel strings of Heaters 3, 4, and 5, each sized to handle half the total feedwater flow, and a bypass line also sized to limit flow to half capacity. A 100 percent feedwater flow can be maintained by opening the bypass line and then shutting off the flow through one of the half sized heater strings. Such an action would cause a reduction in the final feedwater temperature that is significantly less than the 100°F design criterion established for this system.

In the unlikely event that a drop in feedwater temperature in excess of 100°F occurs, and assuming no operator action, the decrease in the minimum critical power ratio (MCPR) and increase in reactor power would be limited, because a scram would occur from high thermal power and thus no significant reductions in fuel thermal margin would occur. The scram might occur marginally sooner for greater temperature drops. After scram, no further increases in power occur.

The effects of this transient have been reviewed within the maximum extended operating domain described in Section 15.0. The most limiting loss of feedwater heating transient with respect to MCPR is performed at 100 percent rated power, normal core flow and a 50°F reduction in inlet feedwater temperature.

The above discussion concerns a transient with a sudden feedwater temperature drop of 100°F. Steady-state operation with partial feedwater heating should also be considered because such operation might occur during maintenance or as a result of a decision to operate with lower feedwater temperature near end-of-cycle (EOC).

There are two distinct periods of concern when operating with partial feedwater heating:

a. Before EOC. Reducing the feedwater temperature before EOC may occur during routine maintenance. The peak pressures will be lower because of the reduced steam production. However, the magnitudes of the DCPR are still transient event dependent and, therefore, evaluation is conducted to ensure that the licensing bases are bounded. The plant is licensed to operate with a 50°F reduction in feedwater temperature.

b. After EOC. Operating with reduced feedwater temperature may occur as a result of an extended fuel cycle. The basis for the plant safety analysis has covered this operating condition. The plant is licensed to operate with a 50°F reduction in feedwater temperature during cycle extension.

15.1.1.1.2 Frequency Classification

The probability of this event (sudden 50°F drop) is considered low enough to warrant being categorized as an infrequent incident. However, because of the lack of a sufficient frequency data base, this transient disturbance is analyzed as an incident of moderate frequency.

This event is analyzed under worst case conditions of a 100°F loss and at full power. A reduction of feedwater temperature of 100°F at high power has never been reported, although smaller decreases have occurred. The probability of occurrence of this event is, therefore, regarded as small.

15.1.1.2 Sequence of Events and Systems Operation

15.1.1.2.1 Sequence of Events

This slow transient event results in the reactor core receiving colder feedwater up to a reduction of 100°F. This collapses the void content in the core thus increasing the core power due to the negative void coefficient.

15.1.1.2.2 Systems Operation

In establishing the expected sequence of events and simulating plant performance, it was assumed that normal functioning occurred in the plant instrumentation and controls, plant protection, and reactor protection systems.

The simulated thermal power trip (STPT) scram is the primary protection system trip in mitigating the consequences of this event.

Required operation of engineered safeguard features is not expected for either of these transients.

15.1.1.3 Core and System Performance

15.1.1.3.1 Mathematical Model

The quasi-steady-state nature of this transient enables this slow transient to be analyzed using the 3-dimensional, coupled nuclear thermal-hydraulics core simulator computer model as described in detail in Reference 1. This model calculates the changes in power level; power distribution; core flow; exposures; reactor thermal-hydraulic characteristics; and critical power ratio with spatially varying voids, control rods, burnable poisons, and other variables under steady-state conditions. For this transient, the time for reactivity insertion is greater than the fuel thermal time constant and the core hydraulic-transport times. Therefore, the steady-state representation before and after the transient is adequate. This computer model has been qualified and approved by the NRC for application with this transient.

15.1.1.3.2 Input Parameters and Initial Conditions

The 100 percent power, normal flow, and partial feedwater heating represents the bounding conditions for the analysis. The transient is simulated by programming a change in feedwater enthalpy corresponding to a 100°F loss in feedwater heating.

15.1.1.3.3 Qualitative Results

A scram on high thermal power may or may not occur for a 100°F loss event since it has been shown that the power increase for a 100°F loss event is very close to the high thermal power scram setpoint. Vessel steam flow and the initial system pressure remains relatively constant or increases slightly.

The analysis evaluated at 100 percent power, normal flow, and partial feedwater heating bounds all power, flow and feedwater temperature conditions. This subcooling perturbation event is not significantly affected by initial power, flow, and feedwater temperature conditions. The operability of the turbine bypass system and the moisture separator reheater does not affect the results of this event.

For reload cores, an evaluation is performed to determine if this transient could potentially alter the cycle MCPR operating limit. The results are reported in the cycle-specific supplemental reload licensing report.

15.1.1.3.4 Consideration of Uncertainties

Important factors (such as reactivity coefficient, scram characteristics, and magnitude of the feedwater temperature change) are assumed to be at the worst configuration so that any deviations seen in actual plant operation reduce the severity of the event.

15.1.1.4 Barrier Performance

The consequences of this event do not result in any temperature or pressure transient in excess of the criteria for which the fuel, pressure vessel, or containment are designed; therefore, these barriers maintain their integrity and function as designed.

15.1.1.5 Radiological Consequences

Since this event does not result in any fuel failures or any release of primary coolant to either the secondary containment or the environment, there are no radiological consequences associated with this event.

15.1.2 Feedwater Controller Failure, Open to Maximum Demand

The Feedwater Controller Failure, open to maximum demand event represents the most limiting event in this analytical category.

15.1.2.1 Identification of Causes and Frequency Classification

15.1.2.1.1 Identification of Causes

This event is postulated on the basis of a single failure of a control device, specifically one that can directly cause an increase in coolant inventory by increasing the feedwater flow.

The most severe applicable event is a feedwater controller failure during maximum flow demand. The feedwater controller is forced to its upper limit at the beginning of the event.

15.1.2.1.2 Frequency Classification

This event is considered to be an incident of moderate frequency.

15.1.2.2 Sequence of Events and Systems Operation

15.1.2.2.1 Sequence of Events

The excess feedwater flow increases the water level to the high level reference point, at which time the feedwater pumps and the main turbine are tripped and a scram is initiated.

15.1.2.2.2 Systems Operation

To properly simulate the expected sequence of events, the analysis of this event assumes normal functioning of plant instrumentation and controls, plant protection, and reactor protection systems, with the exception of the fact that four Group 1 relief valves are assumed

to remain closed. Important system operational actions for this event are the high level tripping of the main turbine, turbine stop valve scram trip initiation, feedwater pump trip, bypass valve opening, and low water level initiation of the reactor core isolation cooling (RCIC) system and the high pressure coolant injection (HPCI) system. Initiation of RCIC and HPCI maintains long term water level control following tripping of feedwater pumps.

In addition to the turbine bypass flow after the turbine trip, the steam flow through the moisture separator reheater line is also available for the first 3 seconds after turbine trip during the transient. The Fermi 2 system is unique in that the main steam flow normally flows to this moisture separator reheater and it is not shut off by the stop or control valves.

The moisture separator reheater and drains system is shown in Chapter 15, Figure 15.0-3. A line carries a portion of the main steam from the main steam manifold to the tube side of two moisture separator reheaters where condensation occurs. The heat given up superheats the shell side fluid, which is the steam source for the low pressure turbine. The condensed fluid passes through the moisture separator reheater seal tank, Heater 6, Heater 5, the flash tanks, the drain pumps, and then is directly injected into the main feedwater line.

Outlet valves on the seal tank and Heater 6 are controlled by their respective levels. High water level in these vessels also opens bypass valves to the condenser.

The moisture separator reheater flow characteristics are modeled as shown in Chapter 15, Figure 15.0-2. The total flow ramps off to about 8.0 percent flow at 200 msec after turbine trip. After reaching about 8.0 percent flow, it becomes constant until 2 seconds have elapsed. After 2 seconds, the flow ramps off linearly to zero at approximately 3 seconds. The analysis of reheater steam flow is discussed in more detail in Chapter 10, Subsection 10.4.4.

15.1.2.3 Core and System Performance

15.1.2.3.1 Mathematical Model

The predicted dynamic behavior of this event is evaluated using the TRACG computer model described in Reference 1.

TRACG is designed to predict the transient behavior associated with a BWR. This model has been qualified by extensive comparison of its predicted results with actual BWR test data. Some of the significant features of the model are:

a. TRACG has a multi-dimensional, two-fluid model for the reactor thermal hydraulics and a three dimensional reactor kinetics model. The models simulate a large variety of test and reactor configurations to allow for detailed, realistic simulation of a wide range of BWR phenomena.

b. TRACG uses a two-fluid model, with six conservation equations for both the liquid and gas phases.

c. The two-fluid conservation equations contain a mixing term to account for turbulent mixing and molecular diffusion.

d. TRACG solves the heat conduction equation for the fuel rods in cylindrical geometry and for structural material in slab geometry TRACG heat conduction

modeling uses a gap conductance model and couples the heat transfer between the fuel rod and the coolant.

e. The TRACG code has had the GEXL heat transfer correlation installed.

f. TRACG uses basic component models as building blocks to construct physical models. The components modeled include the pipe, pump, valve, tee, channel, jet pump, steam separator, steam dryer, vessel, upper plenum, heat exchanger, and break and fill as boundary conditions.

g. TRACG uses a first-principle mechanistic model for the steam separator validated against full-scale performance test data for two-stage and three-stage steam separators.

15.1.2.3.2 Input Parameters and Initial Conditions

The transient is simulated by programming an upper limit failure in the feedwater system so that 114.8 percent of nuclear boiler rated (NBR) feedwater flow occurs at the operating pressure. An additional 5 percent higher flow rate conservatism is assumed in the analysis to allow for feedwater flow uncertainty.

The 114.8 percent maximum flow used is a valid input because the Fermi 2 feedwater system is designed to supply 112.8 percent flow to the reactor at design sparger pressure. This flow is basically controlled by changing the speed of the two steam driven feed pump turbines. Each turbine drive has an independent, redundant electrohydraulic speed control system that responds to feedwater demands from the level control logic system (Chapter 7, Subsection 7.7.1.3). The controlled speed range of each feed pump is adjusted during startup such that a maximum flow demand signal to both pumps will produce a maximum flow of 114.8 percent at nominal pressure. The adjustment of each of the pump speed control spans results in an adequate margin for flow control at rated power and also maximizes the resolution of the control system over the control system operating range. Each turbine speed control is redundant, and any internal failure generally causes the turbine to fail to minimum speed by design. If a particular turbine fails to a high speed, the remaining turbine would be controlled to a lower speed and maintained at that level automatically by the level control system.

Thus, a failure of the common feedwater demand signal to the power supply voltage level was assumed to produce a flow of 114.8 percent which was evaluated for this transient. Replacement of the feedwater control system (FWC) with a digital feedwater control system (DFCS) has eliminated this common element whose proposed failure to power supply voltage level could affect both feedwater pumps to create this high flow condition. The DFWC hardware has separate modules for each feed pump drive. However, this transient bounds that created by any credible failure with the DFWC and is therefore a valid analysis of the system's ability to respond to any proposed failure.

Because each of the two feed pump drives has been adjusted to produce a pump speed that delivers 114.8 percent feedwater flow at nominal pressure at maximum feedwater demand, the calibration will preclude the need for any further corrective actions to meet the design value of flow subsequent to a single failure.

Typical, cycle-specific feedwater controller failure cases analyzed include the following:

a. Operation with turbine bypass and moisture separator reheater operable, and feedwater heaters inoperable at 100 percent power, 105 percent core flow

b. Operation with moisture separator reheater operable with turbine bypass and feedwater heaters inoperable at 100 percent power, 105 percent core flow

c. Operation with feedwater heaters, turbine bypass and moisture separator reheater inoperable at 100 percent power, 105 percent core flow.

15.1.2.3.3 Qualitative Results

Results of the cycle-specific analyses are presented in Table 15.0-2. The operating limits for these analyses are presented in Table 15.0-3. The following subsections present qualitative results of the cases described in Subsection 15.1.2.3.2. Tables 15.1.2-1 through 15.1.2-3 list the typical sequence of events for these cases.

15.1.2.3.3.1 100 Percent Power, 105 Percent Core Flow, 50°F Feedwater Temperature Reduction with Bypass and Moisture Separator Reheater Flow

The high water level turbine trip and feedwater pump trip occur at about 16 sec. Scram occurs simultaneously from stop valve closure and limits the neutron flux peak and fuel thermal transient so that no fuel damage occurs. The turbine bypass system opens to limit peak pressure in the steam line, and the nuclear system process barrier pressure limit is not endangered.

The bypass valves subsequently close to reestablish pressure control in the vessel during shutdown. The level will gradually drop to the low level isolation reference point, activating the RCIC and HPCI systems for long term level control.

15.1.2.3.3.2 100 Percent Power, 105 Percent Core Flow, 50°F Feedwater Temperature Reduction Without Bypass and With Moisture Separator Reheater Flow

The high water level turbine trip and feedwater pump trip occur at about 16 seconds. Reactor scram occurs immediately thereafter which limits the peak neutron flux and fuel thermal transient so that no fuel damage occurs. This analysis is also conservatively applied to the operating condition without moisture separator reheater, but with turbine bypass operable and with partial feedwater heating. This analysis represents the limiting transient for the operational condition without turbine bypass or moisture separator reheater flow and with partial feedwater heating, and provides the basis for the Core Operating Limits Report MCPR operating limit curve.

15.1.2.3.3.3 100 Percent Power, 105 Percent Core Flow, 50°F Feedwater Temperature Reduction Without Bypass and Moisture Separator Reheater Flow

The high water level turbine trip and feedwater pump trip occurs at about 16 seconds. Reactor scram occurs immediately thereafter which limits the peak neutron flux and fuel thermal transient so that no fuel damage occurs. This analysis represents the limiting transient for operation without bypass and moisture separator reheater flow and provides the basis for the Core Operating Limits Report MCPR operating limit curve.

15.1.2.3.4 Consideration of Uncertainties

Important analytical factors (such as void and scram reactivity coefficients) have been adjusted statistically so that any deviation in the actual plant parameters will produce a less severe transient.

15.1.2.4 Barrier Performance

The consequences of this event do not result in any temperature or pressure transient in excess of the criteria for which the fuel, pressure vessel, or containment are designed; therefore these barriers maintain their integrity and function as designed.

15.1.2.5 Radiological Consequences

While the consequence of this event does not result in fuel failure, it does result in the discharge of normal coolant activity to the suppression pool through safety relief valve (SRV) operation. Since this activity is contained in the primary containment, there will be no exposure to operating personnel.

Since this event does not result in an uncontrolled release to the environment, the plant operator can choose to leave the activity bottled up in the primary containment or discharge it to the environment under controlled meteorological and release conditions. If purging of the primary containment is chosen, the release will have to be in accordance with the established Technical Specifications; therefore, this event, at the worst, would only result in a small increase in the yearly integrated exposure level.

Table 15.1.2-1 Typical Sequence of Events for Feedwater Controller Failure at 100% Power, 105% Core Flow, 50°F Feedwater Temperature Reduction with Bypass and Reheater Flow[(a)]

Estimated Time (sec)	Event
0	Simulated failure of 114.8 percent upper limit on feedwater flow is initiated.
15.9	L8 vessel level setpoint trips main turbine and feedwater pumps.
15.9	Turbine trip initiates closure of turbine stop valves and fast closure of turbine control valves.
15.9	Turbine trip initiates bypass operation.
15.9	Main turbine stop valves reach 90 percent-open position and initiate a reactor scram trip.

Table 15.1.2-1 Typical Sequence of Events for Feedwater Controller Failure at 100% Power, 105% Core Flow, 50°F Feedwater Temperature Reduction with Bypass and Reheater Flow[a]

Estimated Time (sec)	Event
15.9	Fast closure of turbine control valves initiates a reactor scram trip.
16.0	Main turbine bypass valves open.
16.1	Turbine control valves are closed.
16.1	Turbine stop valves are closed.
17.7	High pressure pump trip setpoint is reached.
17.9	Reheater flow starts to decay.
18.0	Recirculation pumps trip because of high pressure.
18.9	Reheater flow decays to zero.

[a] See current Supplemental Reload Licensing Report for detailed cycle specific data.

Table 15.1.2-2 Typical Sequence of Events for Feedwater Controller Failure Event at 100% Power, 105% Core Flow, 50°F Feedwater Temperature Reduction without Bypass and with Reheater Flow[a]

Estimated Time (sec)	Event
0	Simulated failure of 114.8 percent upper limit on feedwater flow is initiated.
15.9	L8 vessel level setpoint trips main turbine and feedwater pumps.
15.9	Turbine trip initiates closure of turbine stop valves and fast closure of turbine control valves.
15.9	Main turbine stop valves reach 90 percent open position and initiate a reactor scram trip.

Table 15.1.2-2 Typical Sequence of Events for Feedwater Controller Failure Event at 100% Power, 105% Core Flow, 50°F Feedwater Temperature Reduction without Bypass and with Reheater Flow[(a)]

Estimated Time (sec)	Event
15.9	Fast closure of turbine control valves initiates a reactor scram trip.
16.1	Turbine control valves are closed.
16.1	Turbine stop valves are closed.
17.3	High pressure pump trip setpoint is reached.
17.6	Recirculation pumps trip because of high pressure.
17.7	Group 1 relief valves are actuated.
17.8	Group 2 relief valves are actuated.
17.9	Reheater flow starts to decay.
18.0	Group 3 relief valves are actuated.
18.9	Reheater flow decays to zero.

[(a)] See current Supplemental Reload Licensing Report for detailed cycle specific data.

Table 15.1.2-3 Typical Sequence of Events for Feedwater Controller Failure Event at 100% Power, 105% Core Flow, 50°F Feedwater Temperature Reduction without Bypass and with Reheater Flow[(a)]

Estimated Time (sec)	Event
0	Simulated failure of 114.8 percent upper limit on feedwater flow is initiated.
15.9	L8 vessel level setpoint trips main turbine and feedwater pumps.
15.9	Turbine trip initiates closure of turbine stop valves and fast closure of turbine control valves.

Table 15.1.2-3 Typical Sequence of Events for Feedwater Controller Failure Event at 100% Power, 105% Core Flow, 50°F Feedwater Temperature Reduction without Bypass and with Reheater Flow[(a)]

Estimated Time (sec)	Event
15.9	Main turbine stop valves reach 90 percent open position and initiate a reactor scram trip.
15.9	Fast closure of turbine control valves initiates a reactor scram trip.
16.1	Turbine control valves are closed.
16.1	Turbine stop valves are closed.
17.1	High pressure pump trip setpoint is reached.
17.4	Recirculation pumps trip because of high pressure.
17.4	Group 1 relief valves are actuated.
17.6	Group 2 relief valves are actuated.
17.7	Group 3 relief valves are actuated.

(a) See current Supplemental Reload Licensing Report for detailed cycle specific data.

15.1.3 Pressure Regulator Failure, Open to Maximum Demand

15.1.3.1 Identification of Causes and Frequency Classification

15.1.3.1.1 Identification of Causes

The total steam flow rate to the main turbine, resulting from a pressure regulator malfunction, is limited by a maximum flow limiter imposed at the turbine controls. This limiter is set to limit maximum steam flow to approximately 112.8 percent nuclear boiler rated.

If either the controlling pressure regulator or the backup regulator fails to the open position, the turbine admission valves can be fully opened, and the turbine bypass valves can be partially opened until the maximum steam flow is established.

15.1.3.1.2 Frequency Classification

This transient disturbance is categorized as an incident of moderate frequency.

15.1.3.2 Sequence of Events and Systems Operation

15.1.3.2.1 Sequence of Events

Table 15.1.3-1 lists the typical sequence of events.

15.1.3.2.2 Systems Operation

To properly simulate the expected sequence of events, the analysis of this event assumes normal functioning of plant instrumentation and controls, plant protection, and reactor protection systems except as described below.

Initiation of high pressure coolant injection (HPCI) and reactor core isolation cooling (RCIC) system functions will occur when the vessel water level reaches the L2 setpoint. Normal startup and actuation can take approximately 30 sec (up to 60 sec) before effects are realized. If these events occur, they will follow some time after the primary concerns of fuel thermal margin and overpressure effects have occurred and are expected to be less severe than those already experienced by the system.

15.1.3.3 Core and System Performance

15.1.3.3.1 Mathematical Model

Only a qualitative evaluation is provided.

15.1.3.3.2 Input Parameters and Initial Conditions

This transient is simulated by setting the controlling regulator output to a high value, which causes the turbine admission valves to open fully and the turbine bypass valves to open partially. Since the controlling and backup regulator outputs are gated by a high value gate, the effect of such a failure in the backup regulator would be exactly the same. A regulator failure with 127.6 percent steam flow was simulated as a worst case, since 112.8 percent is the normal maximum flow limit.

15.1.3.3.3 Qualitative Results

For the pressure regulator failure (open) transient, the water level rises to the high level trip setpoint in 2.1 sec and initiates trip of the main turbine and feedwater turbines. Closure of the turbine stop valves initiates scram.

Reactor high level trip limits the duration and severity of the depressurization so that no significant thermal stresses are imposed on the nuclear system process barrier. No significant reductions in fuel thermal margins occur. Because the rapid portion of the transient results in only momentary depressurization of the nuclear system, the nuclear system process barrier is not threatened by high internal pressure for this pressure regulator malfunction.

15.1.3.3.4 Consideration of Uncertainties

If the maximum flow limiter is set higher or lower than normal, faster or slower loss in nuclear steam pressure will result. The rate of depressurization may be limited by the bypass capacity, but it is unlikely that this will happen. For example, the turbine valves will open to the valves wide open state, admitting slightly more than the rated steam flow; and with the limiter in this analysis set to fail at 127.6 percent, we would expect something less than 23.5

percent to be bypassed. Therefore, this is not a limiting factor on this plant. If the rate of depressurization does change, it will be terminated by the low turbine inlet pressure trip setpoint.

For the pressure regulator failure (open) transient, depressurization occurs after initiation of the event, which results in voiding action of the core and then reduces the core power, maintaining high thermal margin. The impact on the minimum critical power ratio (MCPR) and peak vessel pressure for the case with a scram from low turbine inlet pressure (a scram caused by main steam isolation valve (MSIV) closure) due to a lower depressurization rate is insignificant. Because this is a relatively mild transient, an opening to maximum (127.6 percent) is assumed.

The depressurization rate has a proportional effect upon the voiding action of the core. If it is not large enough, the sensed vessel water level trip setpoint (L8) may not be reached, and a turbine feedwater pump trip will not occur in the transient. In this case the turbine inlet pressure will drop below the low pressure isolation setpoint, and the expected transient signature will conclude with an isolation of the main steam lines. The reactor will be shut down by the scram initiated from main steam isolation valve closure.

15.1.3.4 Barrier Performance

The consequences of this event do not result in any temperature or pressure transient in excess of the criteria for which fuel, pressure vessel, or containment are designed; therefore, these barriers maintain their integrity and function as designed.

15.1.3.5 Radiological Consequences

The consequences of this event do not result in any fuel failure.

Table 15.1.3-1 Typical Sequence of Events for Pressure Regulator Failure, Open To Maximum Demand

Estimated Time (sec)	Event
0	Simulate maximum limit on steam flow to main turbine.
0.1	Main turbine bypass starts to open.
2.1	L8 vessel level setpoint trips main turbine and feedwater pumps.
2.1	Reactor scram trip it actuated from main turbine stop valve position switches.

15.1.4 Inadvertent Safety/Relief Valve Opening

Inadvertent opening of an SRV can lead to two possible events. First, the valve may open and reclose. This event has no significant effect on plant operation. Second, the valve may open and stick in the open position. This is the more limiting case and results in the plant transient discussed below.

15.1.4.1 Identification of Causes and Frequency Classification

15.1.4.1.1 Identification of Causes

Cause of inadvertent opening is malfunction of the valve or an operator initiated opening. Opening and closing circuitry at the individual valve level (as opposed to groups of valves) is subject to a single failure impact. It is therefore simply postulated that a failure occurs and the event is analyzed accordingly. Detailed discussion of the valve is provided in Chapter 5.

15.1.4.1.2 Frequency Classification

This transient disturbance is categorized as an infrequent incident, but because of the lack of a comprehensive data base, it is being analyzed as an incident of moderate frequency.

15.1.4.2 Sequence of Events and Systems Operation

15.1.4.2.1 Sequence of Events

Table 15.1.4-1 lists the sequence of events for this transient.

15.1.4.2.2 Systems Operation

In this transient, the analysis assumes normal functioning of plant instrumentation and controls, specifically, the relief valve discharge line temperature sensors, suppression pool temperature sensors, and the level control systems. Additionally, minimum reactor and plant protection systems, emergency core cooling system (ECCS) flow, and residual heat removal (RHR) pool cooling are required. No credit is taken for the functioning of normal operation plant systems other than as defined above.

15.1.4.3 Core and System Performance

15.1.4.3.1 Mathematical Model

Only a qualitative evaluation is provided.

15.1.4.3.2 Input Parameters and Initial Conditions

It is assumed that the reactor is operating at an initial power level corresponding to 105 percent of rated steam flow conditions when an SRV is inadvertently opened. Flow through the valve at normal plant operating conditions stated above is approximately 870,000 lb/hr. Table 5.2-5 contains SRV set pressures and capacities.

15.1.4.3.3 Qualitative Results

The opening of an SRV allows steam to be discharged into the suppression pool. The sudden increase in the rate of steam flow leaving the reactor vessel causes a mild depressurization transient.

The pressure regulator senses the nuclear system pressure decrease; within a few seconds it closes the turbine control valve far enough to stabilize reactor vessel pressure at a slightly lower value, and reactor power settles at nearly the initial power level. Thermal margins decrease only slightly through the transient, and no fuel damage results from the transient. The MCPR is essentially unchanged; therefore, the safety limit margin is unaffected.

The analysis assumed the initial suppression pool temperature is 95°F, maximum.

a. For a fully stuck open SRV, the suppression pool temperature Technical Specifications limit of 110°F is reached in about 6 minutes. Thus, the operator would be required to initiate a reactor scram approximately 6 minutes after the occurrence of the stuck open relief valve

b. If the plant shutdown is delayed, the suppression pool temperature would continue to rise at a rate of about 2°F/minute. At 10 minutes after the occurrence of the stuck open relief valve, the reactor is assumed to be scrammed. The suppression pool temperature would be less than 120°F. Fermi 2 has T-quenchers; therefore, no adverse effect on safety is expected

   The maximum allowable suppression pool temperature is limited by the net positive suction head for ECCS pumps and is discussed in Subsection 6.3.2.14

15.1.4.4 Barrier Performance

As discussed above, the transient resulting from a stuck open relief valve is a mild depressurization within the range of normal load following and therefore without significant effect on reactor coolant pressure boundary (RCPB) and containment design pressure limits.

15.1.4.5 Radiological Consequences

While the consequence of this event does not result in fuel failure, it does result in the discharge of normal coolant activity to the suppression pool via SRV operation. Since this activity is contained in the primary containment, there will be no exposure to operating personnel. Since this event does not result in an uncontrolled release to the environment, the plant operator can choose to leave the activity bottled up in the containment or discharge it to the environment under controlled meteorological and release conditions. If purging of the primary containment is chosen, the release will have to be in accordance with the established Technical Specifications; therefore, this event, at the worst, would result in only a small increase in the yearly integrated exposure level.

Table 15.1.4-1 Typical Sequence of Events for Inadvertent Safety/Relief Valve Opening

Estimated Time (sec)	Event
0	Initiate opening of one SRV, which remains open throughout the event.
6	Operator actuates scram on high suppression pool temperature.
10	Operator attempts to close valve unsuccessfully.
15	The reactor pressure vessel (RPV) water level reaches L2; the HPCI and RCIC systems are actuated.
20	Operator activates RHR and initiates normal plant shutdown.
300	Shutdown is completed.

15.1 DECREASE IN REACTOR COOLANT TEMPERATURE

REFERENCES

1. General Electric Co., "General Electric Standard Application for Reactor Fuel, GESTAR II," NEDE-24011-P-A, (Latest Approved Revision as identified in the COLR).

15.2 INCREASE IN REACTOR PRESSURE

Seven transients are evaluated under the increase in reactor pressure analytical category:

a. Pressure regulator failure - closed

b. Generator load rejection

c. Turbine generator trip

d. Main steam isolation valve closure

e. Loss of condenser vacuum

f. Loss of alternating current power

g. Loss of feedwater flow

Only the turbine generator trip and generator load rejection transients in this analytical category are analyzed for cycle-specific analysis. A qualitative prescription of results is described for those events determined to be nonlimiting from a core performance standpoint.

15.2.1 Pressure Regulator Failure - Closed

15.2.1.1 Identification of Causes and Frequency Classification

15.2.1.1.1 Identification of Causes

Two identical pressure regulators are provided to maintain primary system pressure control. They independently sense pressure just upstream of the main turbine stop valves and compare it with two separate setpoints to create proportional error signals that produce each regulator output. The regulator with the highest output controls the main turbine control valves. (Note: The lowest pressure setpoint gives the largest pressure error and thereby the largest regulator output.) The backup regulator is set 5 psi higher, giving a slightly smaller error and a slightly smaller effective output of the controller.

It is assumed for the purposes of this transient analysis that a single failure occurs that erroneously causes the controlling regulator to close the main turbine control valves and thereby increases reactor pressure. If this occurs, the backup regulator is ready to take control.

15.2.1.1.2 Frequency Classification

This event is treated as a moderate frequency event.

15.2.1.2 Sequence of Events and Operator Actions

15.2.1.2.1 Sequence of Events

Postulating a failure of the primary or controlling pressure regulator in the closed mode, as discussed in Subsection 15.2.1.1.1, will cause the valves to close momentarily. The pressure will increase because the reactor is still generating the initial steam flow. The backup

regulator will reopen the valves and reestablish steady-state operation above the initial pressure equal to the setpoint difference of 5 psi.

15.2.1.2.1.1 Identification of Operator Actions

The operator will verify that the backup regulator assumes proper control.

15.2.1.2.1.2 The Effect of Single Failures and Operator Errors

The nature of the first assumed failure produces a slight pressure increase in the reactor until the backup regulator gains control. Because no other action is significant in restoring normal operation if the backup regulator fails at this time (the second assumed failure), the control valves will start to close, raising reactor pressure to the point where a flux or pressure scram trip will be initiated to shut down the reactor. At rated power, this event is less severe than the turbine trip where stop valve closure occurs.

For the pressure controller failure - closed transient, a single failure is assumed to occur that erroneously causes the main controlling regulator to close the main turbine control valves, thereby increasing reactor pressure. If this occurs, the backup regulator is ready to take control. The probability of the concurrent failure of the backup regulator and the primary regulator is low enough such that the event combination is classified as an infrequent event. Nevertheless, a quantitative evaluation of this assumed transient (failure of the backup regulator) at rated power was made using ODYN. The results show that the operating limit critical power ratio determined by this event is lower than the operating limit CPR determined by the limiting transient. The peak vessel pressure is bounded by the limiting overpressure transient described in Section 5.2.2, “Over-Pressurization Protection.” Therefore, no impact on thermal margin or peak pressure would result from this event combination.

15.2.1.3 Core and System Performance

The disturbance is mild, similar to a pressure setpoint change, and no significant reductions in fuel thermal margins occur. This transient is much less severe than the generator and turbine trip transients described in Subsections 15.2.2 and 15.2.3.

15.2.1.3.1 Mathematical Model

Only a qualitative evaluation is provided.

15.2.1.3.2 Input Parameters and Initial Conditions

Only a qualitative evaluation is provided.

15.2.1.3.3 Qualitative Results

The response of the reactor during this regulator failure is such that the pressure at the turbine inlet increases quickly, less than 2 sec or so, because of the sharp closing action of the turbine control valves that reopen when the backup regulator gains control. This pressure disturbance in the vessel is not expected to exceed flux or pressure scram trip setpoints.

15.2.1.4 Barrier Performance

As noted above, the consequences of this event do not result in any temperature or pressure transient in excess of the criteria for which the fuel, pressure vessel, or containment are designed; therefore, these barriers maintain their integrity and function as designed.

15.2.1.5 Radiological Consequences

Because this event does not result in any additional fuel failures or any release of primary coolant to either the secondary containment or to the environment, there are no radiological consequences associated with this event.

15.2.2 Generator Load Rejection

Either the generator load rejection without bypass event or the turbine generator trip without bypass event (Subsection 15.2.3) are the most limiting events in this analytical category.

15.2.2.1 Identification of Causes and Frequency Classification

15.2.2.1.1 Identification of Causes

The turbine control valves (TCVs) will close under servo action initiation as a result of turbine shaft acceleration whenever electrical grid disturbances occur that result in significant loss of electrical load on the generator. The turbine control valves are required to close as rapidly as possible to prevent excessive overspeed of the turbine generator rotor. Closure of the main turbine control valves will cause a sudden reduction in steam flow, which in turn will result in an increase in system pressure and reactor shutdown.

15.2.2.1.2 Frequency Classification

This transient is categorized as an incident of moderate frequency. Fermi 2 has an uncommon bypass system because of its English Electric turbine. Additional information on the Fermi 2 bypass system is provided in Subsection 10.4.4.

15.2.2.2 Sequence of Events and Systems Operation

15.2.2.2.1 Sequence of Events

A loss of generator electrical load from high power conditions initiates a fast closure of the turbine control valves which results in a rapid pressurization in the reactor vessel, causing a collapse of steam voids that rapidly increases the neutron flux. The fast closure of the turbine control valves initiates the reactor scram and terminates the event.

15.2.2.2.2 Systems Operation

The TCV fast closure signal is generated independently in each valve control logic and wired directly into the reactor protection system (RPS). The signal to the RPS is generated

simultaneously with the de-energizing of the solenoid dump valves, which produces control valve fast closure. Therefore, when TCV fast closure occurs, a scram trip signal is initiated.

The pressure relief system, which operates the relief valves independently when system pressure exceeds relief valve instrumentation setpoints, is assumed to function normally during the time period analyzed with the exception of the fact that four Group 1 relief valves are assumed to remain closed.

All plant control systems maintain normal operation unless specifically designated to the contrary. The steam flow through the moisture separator reheater line as described in Subsection 15.1.2.2.2, is included in the analysis, except as noted.

15.2.2.3 Core and System Performance

15.2.2.3.1 Mathematical Model

The predicted dynamic behavior of this event has been determined by using the one-dimensional, non-linear dynamic response computer model described in Reference 1 and Subsection 15.1.2.3.1.

15.2.2.3.2 Input Parameters and Initial Conditions

These analyses are evaluated, unless otherwise noted, with the plant conditions in Table 15.0-1.

The turbine control system power/speed acceleration rate detects load rejection before a measurable speed change takes place.

The closure characteristics of the TCVs are assumed such that the valves operate in the full arc (FA) mode and have a full stroke closure time, from fully open to fully closed, of 0.220 seconds. The valves are assumed to be at an intermediate position at 100 percent power so they close faster than 0.220 seconds causing a more severe pressure transient.

Fermi 2 valves have a near linear flow versus stroke characteristic. In sensitivity studies the initial control valve position at less than wide open and the reactor operating at full power were considered. These studies indicate that the smaller control valve opening does not result in a significant increase change in CPR.

Auxiliary power would normally be independent of any turbine generator overspeed effects.

A reactor scram is initiated simultaneously with the de-energizing of the solenoid dump valves. This produces the TCV fast closure.

When comparing a lower power case with a full power case for generator load rejection transient with a full stroke TCV closure, the severity of the event remains relatively unchanged. This is because the pressurization effect of reduced steam flow rate and shorter TCV closure time balance each other. Consequently, ΔMCPR and peak vessel pressure during a load rejection transient at low power are expected to be about the same as during a full power transient.

For the Fermi 2 turbine design, the control valves are at an intermediate position at rated reactor pressure and a steam flow equivalent to rated nuclear boiler rating (NBR). In the case

of the TRACG analysis, evaluated for the turbine generator trip transient, an intermediate position of the control valves is assumed to exist initially and corresponds to an actual valve travel time of less than 0.220 seconds.

In the evaluation of the generator load rejection transient, the closure characteristics of the TCVs are assumed to be in the full arc mode. That is, the valves operate in the full arc mode and have a full stroke closure time of 0.220 seconds from fully open to fully closed. Sensitivity studies show that TCV closure times less than the assumed 0.220 sec do not result in unacceptable increases in delta CPR or reactor peak pressure. For example, if the TCV closure time were 0.15 sec, the peak surface heat flux would increase by approximately 1 percent and the peak vessel pressure by only about 1 psi. The change in CPR for the turbine trip transient and the generator load rejection transient are close with the generator load rejection transient normally being more severe. However, this transient is confirmed each fuel cycle so the results of the analysis can be found in the most current Supplemental Reload Licensing Report.

The following generator load rejection without bypass cases are typically analyzed for cycle-specific analysis:

a. Operation with moisture separator reheater and feedwater heaters operable at 100 percent power, 105 percent flow at EOC.

b. Operation without moisture separator reheater and with feedwater heaters operable at 100 percent power, 105 percent flow, at EOC.

15.2.2.3.3 Qualitative Results

Because of Fermi 2 special design features, (Chapter 10, Subsection 10.4.4) the turbine generator trip transient is typically bounded by this transient.

A generator load rejection with failure of the bypass system typically bounds the corresponding turbine trip transient due to the following Fermi 2 specific design features:

a. Recirculation pumps are powered through auxiliary transformers from outside power sources and are independent of turbine generator overspeed effects

b. A reactor scram is initiated simultaneously with the de-energizing of the solenoid dump valves, which produces the TCV fast closure. The TCVs are at an intermediate position so they close faster than the full open closure time of 0.220 seconds. Therefore, the pressure transient is larger.

Therefore, the generator load rejection transient bounds the turbine trip transient discussed in Subsection 15.2.3 typically. However, this transient is confirmed each fuel cycle so the results of the analysis can be found in the most current Supplemental Reload Licensing Report.

15.2.2.3.4 Consideration of Uncertainties

Important analytical factors, such as void and scram reactivity coefficients, have been adjusted statistically at a given cycle exposure so that any deviation in the actual plant parameter will produce a less severe transient.

15.2.2.4 Barrier Performance

The consequences of the analyzed events do not result in any temperature or pressure transient in excess of the criteria for which the fuel, pressure vessel, or containment are designed; therefore, these barriers maintain their integrity and function as designed.

15.2.2.5 Radiological Consequences

While the consequence of this event does not result in fuel failures, it does result in the discharge of normal coolant activity to the suppression pool via safety/relief valve (SRV) operation. Since this activity is contained in the primary containment, there will be no exposure to operating personnel. Since this event does not result in an uncontrolled release to the environment, the plant operator can choose to leave the activity bottled up in the containment or discharge it to the environment under controlled meteorological and release conditions. If purging of the containment is chosen, the release will have to be in accordance with established Technical Specifications; therefore, this event, at the worst, would result in only a small increase in the yearly integrated exposure level.

Table 15.2.2-1 TYPICAL SEQUENCE OF EVENTS FOR GENERATOR LOAD REJECTION, WITHOUT TURBINE BYPASS AND WITH MOISTURE SEPARATOR REHEATER FLOW AT MOC[(a)]

Estimated Time (sec)	Event
(-)0.015	Turbine generator detects loss of electrical load when CM and CF open.
0	Turbine generator trip logic initiates turbine control valve (TCV) fast closure.
0	Turbine bypass valves fail to operate.
0	TCV Fast control valve closure logic simultaneously initiates scram trip.
0.2	Turbine control valves are fully closed.
1.2	High pressure pump trip setpoint is reached.
1.5	Recirculation pumps trip because of high pressure.
1.6	Group 1 relief valves are actuated.
1.7	Group 2 relief valves are actuated.
1.9	Group 3 relief valves are actuated.

Table 15.2.2-1 TYPICAL SEQUENCE OF EVENTS FOR GENERATOR LOAD REJECTION, WITHOUT TURBINE BYPASS AND WITH MOISTURE SEPARATOR REHEATER FLOW AT MOC[(a)]

Estimated Time (sec)	Event
2.0	Reheater flow starts to decay.
3.0	Reheater flow decays to zero.

[(a)] See current Supplemental Reload Licensing Report for detailed cycle specific data.

Table 15.2.2-2 TYPICAL SEQUENCE OF EVENTS FOR GENERATOR LOAD REJECTION, WITHOUT TURBINE BYPASS AND WITH MOISTURE SEPARATOR REHEATER FLOW AT EOC[(a)]

Estimated Time (sec)	Event
(-)0.015	Turbine generator detects loss of electrical load.
0	Turbine generator protective logic initiates turbine control valve fast closure.
0	Turbine bypass valves fail to operate.
0	Fast control valve closure initiates scram trip.
0.2	Turbine control valves are fully closed.
1.3	High pressure pump trip setpoint is reached.
1.6	Recirculation pumps trip because of high pressure.
1.7	Group 1 relief valves are actuated.
1.8	Group 2 relief valves are actuated.
2.0	Group 3 relief valves are actuated.
2.0	Reheater flow starts to decay.
3.0	Reheater flow decays to zero.

[a] See current Supplemental Reload Licensing Report for detailed cycle specific data.

Table 15.2.2-3 TYPICAL SEQUENCE OF EVENTS FOR GENERATOR LOAD REJECTION, WITHOUT TURBINE BYPASS AND WITHOUT MOISTURE SEPARATOR REHEATER FLOW AT EOC[a]

Estimated Time (sec)	Event
(-)0.015	Turbine generator detects loss of electrical load.
0	Turbine generator protective logic initiates turbine control valve fast closure.
0	Turbine bypass valves fail to operate.
0	Fast control valve closure initiates scram trip.
0.2	Turbine control valves are fully closed.
1.1	High pressure pump trip setpoint is reached.
1.4	Recirculation pumps trip because of high pressure.
1.4	Group 1 relief valves are actuated.
1.5	Group 2 relief valves are actuated.
1.7	Group 3 relief valves are actuated.

[a] See current Supplemental Reload Licensing Report for detailed cycle specific data.

15.2.3 Turbine Generator Trip

Either the generator load rejection without bypass event (Subsection 15.2.2) or the turbine generator trip without bypass event are the most limiting events in this analytical category.

15.2.3.1 Identification of Causes and Frequency Classification

15.2.3.1.1 Identification of Causes

A variety of turbine or nuclear system malfunctions will initiate a turbine trip. Some examples are low condenser vacuum and reactor high water level. Both turbine generator trip and load rejection will initiate the closure of turbine stop valves and the fast closure of the turbine control valves (TCV).

15.2.3.1.2 Frequency Classification

This transient is categorized as an incident of moderate frequency. In defining the frequency of the this event, turbine generator trips that occur as a by product of other transients, such as loss of condenser vacuum or reactor high level trip events, are not included. However, spurious low vacuum or high level trip signals that cause an unnecessary turbine generator trip are included in defining the frequency. To get an accurate event-by-event frequency breakdown, this type of division of initiating causes is required.

15.2.3.2 Sequence of Events and Systems Operation

15.2.3.2.1 Sequence of Events

This event results in a rapid pressurization in the reactor vessel causing a collapse of steam void that rapidly increases the neutron flux. The fast closure of the turbine control/stop valve initiates the reactor scram and terminates the event.

15.2.3.2.2 Systems Operation

All plant control systems maintain normal operation unless specifically designated to the contrary. The steam flow through the moisture separator reheater line as described in Subsection 15.1.2.2.2, is included in this analysis with the reheater operational. The turbine bypass is assumed to be out-of-service for all the analyses.

A turbine generator trip signal closes both the stop and control valves at the maximum closure rate of 0.220 sec for full valve travel. Each set of valves is wired in a preassigned logic to cause a reactor scram upon closure. For the stop valve function, a limit switch at a valve position of 10 percent closed from full open is used. A control valve fast closure signal is generated independently in each valve control logic and wired directly into the reactor protection system (RPS). The signal to the RPS is generated simultaneously with the de-energizing of the solenoid dump valves, which produce the control valve fast closure.

In the analyses, it is assumed that both sets of turbine valves are closed on turbine generator trip demand, but as an added conservatism the scram is assumed to occur as a result of the stop valve closure. The trip, which is anticipated by the control valve fast closure signal to the RPS, has been considered. For analytical purposes, the reactor trip occurs 0.02 seconds after the turbine generator trip as the stop valve reaches the 10 percent closed position. Credit is taken for successful operation of the RPS.

The pressure relief system, which operates the relief valves independently when system pressure exceeds relief valve setpoints, is assumed to function normally during the time period analyzed with the exception of the fact that four Group 1 relief valves are assumed to remain closed.

15.2.3.3 Core and System Performance

15.2.3.3.1 Mathematical Model

The predicted dynamic behavior of this event has been determined by using the one-dimensional, nonlinear dynamic response computer model described in Reference 1 and Subsection 15.1.2.3.1.

15.2.3.3.2 Input Parameters and Initial Conditions

These analyses are evaluated, unless otherwise noted, with the plant conditions in Table 15.0-1.

Turbine stop valve full stroke closure time is assumed to be 0.220 sec.

A reactor scram is initiated by position switches on the stop valves when the valves are less than 90 percent open. This stop valve scram trip signal is automatically bypassed when the reactor is below 29.5 percent NBR power level.

A reactor scram signal is also initiated by the fast closure of turbine control valves. A 30-msec delay of this scram signal is conservatively assumed.

The following turbine generator trip without bypass cases are typically analyzed for cycle-specific analysis:

a. Operation with moisture separator reheater and feedwater heaters operable at 100 percent power, 105 percent flow at EOC.

b. Operation without moisture separator reheater and with feedwater heaters operable at 100 percent power, 105 percent flow, at EOC.

15.2.3.3.3 Qualitative Results

Results of the cycle-specific analyses are presented in Table 15.0-2. The MCPR operating limits for these analyses are presented in Table 15.0-3. The following subsections present the results of the cases described above. Tables 15.2.3-1, 15.2.3-2 and 15.2.3-3 list the typical sequence of events for these cases.

15.2.3.3.3.1 100 Percent Power, 105 Percent Flow with Moisture Separator Reheater and Feedwater Heaters Operable at MOC

This analysis typically represents a non-limiting transient for normal operation early in the cycle. The Core Operating Limits Report and Table 15.0-3 describe the limiting transients for each operating cycle.

15.2.3.3.3.2 100 Percent Power, 105 Percent Flow with Moisture Separator Reheater and Feedwater Heaters Operable at EOC

This transient is typically bounded by the generator load rejection without bypass with moisture separator reheater and feedwater heaters operable at EOC. The Core Operating Limits Report and Table 15.0-3 describe the limiting transients for each operating cycle.

15.2.3.3.3.3 100 Percent Power, 105 Percent Flow with Moisture Separator Reheater Inoperable and Feedwater Heaters Operable at EOC

This transient is more severe than the turbine generator trip without bypass since no credit is taken for the passive steam bypass flow through the moisture separator reheater. The high pressure pump trip setpoint is reached and the recirculation pumps trip about 0.1 seconds earlier, and the Group 1, 2 and 3 relief valves are actuated about 0.2 seconds earlier than in the turbine generator trip without bypass transient. The Core Operating Limits Report and Table 15.0-3 describe the limiting transients for each operating cycle.

15.2.3.3.4 Consideration of Uncertainties

Important analytical factors, such as void and scram reactivity coefficients, have been adjusted statistically at a given cycle exposure so that any deviation in the actual plant parameter will produce a less severe transient.

15.2.3.4 Barrier Performance

The consequences of the analyzed events do not result in any temperature or pressure transient in excess of the criteria for which the fuel, pressure vessel, or containment are designed; therefore, these barriers maintain their integrity and function as designed.

15.2.3.5 Radiological Consequences

While the consequences of this event do not result in fuel failure, there is discharge of normal coolant activity to the suppression pool via SRV operation. Since this activity is contained in the primary containment, there will be no exposure to operating personnel. Since this event does not result in an uncontrolled release to the environment, the plant operator can choose to leave the activity bottled up in the containment or discharge it to the environment under controlled meteorological and release conditions. If purging of the primary containment is chosen, the release will have to be in accordance with established Technical Specifications; therefore, this event, at the worst, would result in only a small increase in the yearly integrated exposure level.

Table 15.2.3-1 TYPICAL SEQUENCE OF EVENTS FOR TURBINE GENERATOR TRIP WITHOUT BYPASS AT 100% POWER, 105% FLOW, RATED FEEDWATER TEMPERATURE WITH REHEATER FLOW AT MOC[a]

Estimated Time (sec)	Event
0	Turbine generator trip initiates fast closure of turbine control valves.
0	Turbine generator trip of load rejection initiates closure of main stop valves.
0	Turbine bypass valves fail to operate.

Table 15.2.3-1 TYPICAL SEQUENCE OF EVENTS FOR TURBINE GENERATOR TRIP WITHOUT BYPASS AT 100% POWER, 105% FLOW, RATED FEEDWATER TEMPERATURE WITH REHEATER FLOW AT MOC[(a)]

Estimated Time (sec)	Event
0.02	Main turbine stop valves reach 90 percent open position and initiate reactor scram trip.
0.03	Fast closure of turbine control valves initiaties a reactor scram trip.
0.2	Turbine control valves are fully closed.
1.3	High pressure pump trip setpoint is reached
1.6	Recirculation pumps trip because of high pressure.
1.7	Group 1 relief valves are actuated.
1.9	Group 2 relief valves are actuated.
2.0	Reheater flow starts to decay.
2.1	Group 3 relief valves are actuated.
3.0	Reheater flow decays to zero.

(a) See current Supplemental Reload Licensing Report for detailed cycle specific data.

Table 15.2.3-2 TYPICAL SEQUENCE OF EVENTS FOR TURBINE GENERATOR TRIP WITHOUT BYPASS AT 100% POWER, 105% FLOW, RATED FEEDWATER TEMPERATURE WITH REHEATER FLOW AT EOC

Estimated Time (sec)	Event
0	Turbine generator trip initiates fast closure of turbine control valves.
0	Turbine generator trip or load rejection initiates closure of main stop valves.
0	Turbine bypass valves fail to operate.

Table 15.2.3-2 TYPICAL SEQUENCE OF EVENTS FOR TURBINE GENERATOR TRIP WITHOUT BYPASS AT 100% POWER, 105% FLOW, RATED FEEDWATER TEMPERATURE WITH REHEATER FLOW AT EOC

Estimated Time (sec)	Event
0.02	Main turbine stop valves reach 90 percent open position and initiate reactor scram trip.
0.03	Fast closure of turbine control valves initiaties a reactor scram trip.
0.2	Turbine control valves are fully closed.
0.2	Turbine stop valves are fully closed.
1.3	High pressure pump trip setpoint is reached
1.6	Recirculation pumps trip because of high pressure.
1.7	Group 1 relief valves are actuated.
1.8	Group 2 relief valves are actuated.
2.0	Group 3 relief valves are actuated.
2.0	Reheater flow starts to decay.
3.0	Reheater flow decays to zero.

Table 15.2.3-3 TYPICAL SEQUENCE OF EVENTS FOR TURBINE GENERATOR TRIP WITHOUT BYPASS AT 100% POWER, 105% FLOW, RATED FEEDWATER TEMPERATURE WITHOUT REHEATER FLOW AT EOC

Estimated Time (sec)	Event
0	Turbine generator trip initiates fast closure of turbine control valves.
0	Turbine generator trip or load rejection initiates closure of main stop valves.
0	Turbine bypass valves fail to operate.

Table 15.2.3-3 TYPICAL SEQUENCE OF EVENTS FOR TURBINE GENERATOR TRIP WITHOUT BYPASS AT 100% POWER, 105% FLOW, RATED FEEDWATER TEMPERATURE WITHOUT REHEATER FLOW AT EOC

Estimated Time (sec)	Event
0.02	Main turbine stop valves reach 90 percent open position and initiate reactor scram trip.
0.03	Fast closure of turbine control valves initiaties a reactor scram trip.
0.2	Turbine control valves are fully closed.
0.2	Turbine stop valves are fully closed.
1.1	High pressure pump trip setpoint is reached
1.4	Recirculation pumps trip because of high pressure.
1.5	Group 1 relief valves are actuated.
1.6	Group 2 relief valves are actuated.
1.7	Group 3 relief valves are actuated.

15.2.4 Main Steam Isolation Valves Closure

15.2.4.1 Identification of Causes and Frequency Classification

15.2.4.1.1 Identification of Causes

Various steam line and nuclear system malfunctions, or operator actions, can initiate main steam isolation valves (MSIV) closure. Examples are low steam line pressure, high steam line flow, high steam line radiation, low water level, or manual action.

15.2.4.1.2 Frequency Classification

15.2.4.1.2.1 Closure of All Main Steam Isolation Valves

This event is categorized as an incident of moderate frequency. To define the frequency of this event as an initiating event and not the by product of another transient, only the following contribute to the frequency: manual action (purposely or inadvertently); spurious signals, such as low pressure, low reactor water level, low condenser vacuum, and the like; and finally, equipment malfunctions, such as faulty valves or operating mechanisms. Depending on reactor conditions, a closure of one MSIV may cause an immediate closure of

all the other MSIVs. If this occurs, it is also included in this category. During the MSIV closure, position switches on the valves provide a reactor scram if the valves in three or more main steam lines are less than 90 percent open (except for interlocks which permit proper plant startup). Protection system logic, however, permits the test closure of one valve without initiating scram from the position switches.

15.2.4.1.2.2 Closure of One Main Steam Isolation Valve

This event is categorized as an incident of moderate frequency. One MSIV at a time may be manually closed for testing purposes. Operator error or equipment malfunction may cause a single MSIV to be closed inadvertently. If reactor power is greater than about 80 percent when this occurs, a high flux or high steam line flow scram may result (if all MSIVs close as a result of the single closure, the event is considered a closure of all MSIVs).

15.2.4.2 Sequence of Events and Systems Operation

15.2.4.2.1 Sequence of Events

Table 15.2.4-1 lists the typical sequence of events.

15.2.4.2.2 Systems Operation

15.2.4.2.2.1 Closure of All Main Steam Isolation Valves

The MSIV closures initiate a reactor scram trip via position signals to the protection system. Credit is taken for successful operation of the protection system. The pressure relief system, which initiates opening of the relief valves when system pressure exceeds relief valve setpoints, is assumed to function normally during the time period analyzed. All plant control systems maintain normal operation, unless specifically designated to the contrary.

15.2.4.2.2.2 Closure of One Main Steam Isolation Valve

A closure of a single MSIV at any given time will not initiate a reactor scram. This is because the valve position scram trip logic is designed to accommodate single valve operation and testability during normal reactor operation at limited power levels. Credit is taken for the operation of the pressure and flux signals to initiate a reactor scram. All plant control systems maintain normal operation, unless specifically designated to the contrary.

15.2.4.3 Core and System Performance

15.2.4.3.1 Mathematical Model

Only a qualitative analysis is provided.

15.2.4.3.2 Input Parameters and Initial Conditions

Only a qualitative evaluation is provided.

The MSIVs close in 3 to 5 sec. The worst case, the 3-sec closure time, is assumed in this analysis.

Position switches on the valves initiate a reactor scram when the valves are less than 90 percent open. Closure of these valves inhibits steam flow to the feedwater turbines terminating feedwater flow.

Valve closure indirectly causes a trip of the main turbine and generator. Because of the loss of feedwater flow, water level within the vessel decreases sufficiently and initiates the high pressure coolant injection (HPCI) and reactor core isolation cooling (RCIC) systems.

15.2.4.3.3 Qualitative Results

15.2.4.3.3.1 Main Steam Isolation Valves, Position Scram

For the simultaneous isolation of all main steam lines while the reactor is operating at rated NBR, the neutron flux reaches a peak, then drops below its initial power value.

15.2.4.3.3.2 Closure of One Main Steam Isolation Valve

Only one isolation valve is permitted to be closed at a time for testing purposes to prevent scram. Normal test procedure requires an initial power reduction to approximately 80 to 90 percent of design conditions to avoid high flux scram, high pressure scram, or full isolation from high steam flow in the live lines. With a 3-sec closure of one main steam isolation valve during rated power conditions, the steam flow disturbance raises vessel pressure and reactor power enough to initiate a high neutron flux scram. This transient is considerably milder than the full power case. No quantitative analysis is furnished for this event. However, no significant change in thermal margins is experienced, and no fuel damage occurs. Peak pressure remains below SRV setpoints.

Inadvertent closure of one or all of the isolation valves while the reactor is shut down will produce no significant transient. Closures during plant heatup (operating state D) will be less severe than the maximum power cases (maximum stored and decay heat) discussed in Subsection 15.2.4.3.3.1.

15.2.4.3.4 Consideration of Uncertainties

Uncertainties in these analyses involve protection system settings, system capacities, and system response characteristics. In all cases, the most conservative values are used in the analyses.

a. Slowest allowable control rod scram motion is assumed

b. Scram worth shape for all-rod-out conditions is assumed

c. Minimum specified valve capacities are utilized for overpressure protection

d. Setpoints of the SRVs are assumed to be at least 1 percent higher than the valve's nominal setpoint.

15.2.4.4 Barrier Performance

15.2.4.4.1 Closure of All Main Steam Isolation Valves

The nuclear system relief valves begin to open at approximately 2.7 sec after the start of isolation. The valves close sequentially as the stored heat is dissipated, but continue to discharge the decay heat intermittently.

15.2.4.4.2 Closure of One Main Steam Isolation Valve

No significant effect is imposed on the reactor coolant pressure boundary (RCPB) since, if closure of the valve occurs at an unacceptably high operating power level, a flux or pressure scram will result. The main turbine bypass system will continue to regulate system pressure via the other three live steam lines.

15.2.4.5 Radiological Consequences

While the consequences of this event do not result in fuel failures, there is discharge of normal coolant activity to the suppression pool via SRV operation. Since this activity is contained in the primary containment, there will be no exposure to operating personnel. Since this event does not result in an uncontrolled release to the environment, the plant operator can choose to leave the activity bottled up in the primary containment or discharge it to the environment under controlled meteorological and release conditions. If purging of the primary containment is chosen, the release will have to be in accordance with established Technical Specifications; therefore, this event, at the worst, would result in only a small increase in the yearly integrated exposure level.

Table 15.2.4-1 TYPICAL SEQUENCE OF EVENTS FOR MAIN STEAM ISOLATION VALVES, POSITION SCRAM

Estimated Time (sec)	Event
0	Initiate closure of all MSIVs.
0.3	MSIVs reach 90 percent open.[a]
0.3	MSIV position trip scram is initiated.
2.7	Group 1 relief valves open due to pressure relief setpoint action.[b]
2.8	High pressure pump trip setpoint is reached.
3.1	Recirculation pumps are tripped due to high pressure.
11.5	Group 1 pressure relief valves close.
15+	Relief valves open and close as required for pressure relief.
53	HPCI/RCIC systems flow enters vessel to maintain water level (not simulated). Note HPCI rated flow may occur later if the maximum analyzed response time of 60 sec is assumed.

[a] The change in position scram setpoint to 85 percent open has no significant impact on delta CPR or peak pressure.

[b] The change in allowable SRV setpoint tolerances from ±1% to ±3% has no impact on delta CPR because minimum MCPR occurs before SRV opening.

15.2.5 Loss of Condenser Vacuum at Two Inches per Second

15.2.5.1 Identification of Causes and Frequency Classification

15.2.5.1.1 Identification of Causes

Various system malfunctions that can cause a loss of condenser vacuum through some single equipment failure are designated in Table 15.2.5-1.

15.2.5.1.2 Frequency Classification

This event is categorized as an incident of moderate frequency.

15.2.5.2 Sequence of Events and Systems Operation

15.2.5.2.1 Sequence of Events

Table 15.2.5-2 lists the typical sequence of events.

15.2.5.2.2 Systems Operation

In establishing the typical sequence of events, it was assumed that normal functioning occurred in the plant instrumentation and controls, and in plant protection and reactor protection systems. Tripping functions incurred by sensing main turbine condenser vacuum pressure are designated in Table 15.2.5-3.

15.2.5.3 Core and System Performance

15.2.5.3.1 Mathematical Model

Only a qualitative analysis is provided.

15.2.5.3.2 Input Parameters and Initial Conditions

Only a qualitative evaluation is provided.

A reactor scram is initiated by position switches on the stop valves when the valves are less than 90 percent open. This stop valve scram trip signal is automatically bypassed when the reactor is below 29.5 percent NBR power level.

The analysis presented here is a hypothetical case with a conservative 2-in. Hg/sec vacuum decay rate. Thus, the bypass system is available for several seconds, since the bypass is signaled to close at a vacuum level of about 10 in. Hg less than the stop valve closure.

15.2.5.3.3 Qualitative Results

Under this hypothetical 2-in. Hg/sec vacuum decay condition, the turbine bypass valve and MSIV closure will follow main turbine and feedwater turbine trips about 5 sec after they initiate the transient. For Fermi 2, the minimum period of time (5 sec) between the turbine trip and the isolation of MSIV is based on the maximum rate of vacuum loss in Table 15.2.5-1 (24-in. Hg/min or 0.4 in. Hg/sec) that was estimated at the time of the original licensing of the plant. This transient, therefore, is similar to a normal turbine trip with bypass. The effect of MSIV closure tends to be minimal, since the closure of main turbine stop valves and subsequently the bypass valves has already shut off the main steam line flow. It is assumed that the plant is initially operating at rated NBR power conditions. Safety relief valves open to limit the pressure rise, then sequentially reclose as the stored energy is dissipated.

15.2.5.3.4 Consideration of Uncertainties

The reduction or loss of vacuum in the main turbine condenser will sequentially trip the main and feedwater turbines and close the MSIVs and bypass valves. While these are the major events occurring, other resultant actions will include scram (from stop valve closure) and bypass opening with the main turbine trip. Because the protective actions are actuated at various levels of condenser vacuum, the severity of the resulting transient is directly dependent upon the rate at which the vacuum pressure is lost. Normal loss of vacuum due to loss of cooling water pumps or steam jet air ejector problems produces a very slow rate of loss of vacuum: minutes, not seconds (see Table 15.2.5-1). If corrective actions by the reactor operators are unsuccessful, then simultaneous trips of the main and feedwater turbines, and ultimately complete isolation by closing the bypass valves (opened with the main turbine trip) and the MSIVs, will occur.

A faster rate of loss of the condenser vacuum will reduce the anticipatory action of the scram and the overall effectiveness of the bypass valves, since they will be closed more quickly.

Other uncertainties in these analyses involve protection system settings, system capacities, and system response characteristics. In all cases, the most conservative values are used in the analyses.

a. Slowest allowable control rod scram motion is assumed

b. Scram worth shape for all-rod-out conditions is assumed

c. Minimum specified valve capacities are utilized for overpressure protection

d. Setpoints of the SRVs are assumed to be at least the upper limit of Technical Specifications for all valves.

15.2.5.4 Barrier Performance

The overpressure transient is below the reactor coolant pressure boundary transient pressure limit of 1375 psig. A comparison between the turbine trip with bypass failure at high power shows the similarities between these two transients. The prime differences are the loss of feedwater and main steam isolation, and the resulting low water level trips.

15.2.5.5 Radiological Consequences

While the consequence of this event does not result in fuel failures, it does result in the discharge of normal coolant activity to the suppression pool via SRV operation. Since this activity is contained in the primary containment, there will be no exposure to operating personnel. Since this event does not result in an uncontrolled release to the environment, the plant operator can choose to leave the activity bottled up in the primary containment or discharge it to the environment under controlled meteorological and release conditions. If purging of the primary containment is chosen, the release will have to be in accordance with established Technical Specifications; therefore, this event, at the worst, would result in only a small increase in the yearly integrated exposure level.

TABLE 15.2.5-1 TYPICAL RATES OF DECAY FOR CONDENSER VACUUM

Cause		Estimated Vacuum Decay Rate
1.	Failure or isolation of steam-jet air ejectors	<1 in. Hg/minute
2.	Loss of sealing steam to shaft gland seals	≈1 to 2 in. Hg/minute
3.	Opening of vacuum breaker valves	≈2 to 12 in. Hg/minute
4.	Loss of one or more circulating water pumps	≈4 to 24 in. Hg/minute

TABLE 15.2.5-2 TYPICAL SEQUENCE OF EVENTS FOR LOSS OF CONDENSER VACUUM AT 2 INCHES PER SECOND

Estimated Time (sec)	Event
-2.5	Initiate simulated loss of condenser vacuum at 2 in. Hg per sec.
0.0	Low condenser vacuum main turbine trip is actuated.
0.0	Low condenser vacuum feedwater trip is actuated.
0.02	Main turbine trip initiates reactor scram.
2.0	Moisture separator reheater flow starts to decay.
2.9	Group 1 relief valves' setpoints are actuated.
5.0	Reheater flow decays to zero.
5.0	Low condenser vacuum initiates MSIV closure.

TABLE 15.2.5-2 TYPICAL SEQUENCE OF EVENTS FOR LOSS OF CONDENSER VACUUM AT 2 INCHES PER SECOND

Estimated Time (sec)	Event
5.0	Low condenser vacuum initiates bypass valve closure.
9.8	Group 1 relief valves close.
15.0	Water level drops to L2 initiating recirculation pump trip and the startup sequence for HPCI/RCIC.
20+	Relief valve opens and closes as required to maintain pressure relief.
45	HPCI/RCIC system flow enters vessel to maintain water level (not simulated). Note: HPCI injection will take longer assuming the maximum analyzed response time of 60 sec.

TABLE 15.2.5-3 TRIP SIGNALS ASSOCIATED WITH LOSS OF CONDENSER VACUUM

Vacuum (in. Hg)	Protective Action Initiated
27 to 28	Normal vacuum range
20	Main turbine trip and feedwater turbine trip (stop valve closures)
10	MSIV closure and bypass valve closure

15.2.6 Loss of Alternating Current Power

15.2.6.1 Identification of Causes and Frequency Classification

15.2.6.1.1 Identification of Causes

Loss of all grid connections can result from major shifts in electrical loads, loss of loads, lightning, storms, wind, and the like, which contribute to electrical grid instabilities. These instabilities will cause equipment damage if unchecked. Protective relay schemes automatically disconnect electrical sources and loads to mitigate damage.

15.2.6.1.2 Frequency Classification

This transient disturbance is categorized as an incident of moderate frequency.

15.2.6.2 Sequence of Events and Systems Operation

15.2.6.2.1 Sequence of Events

Table 15.2.6-1 lists the typical sequence of events.

15.2.6.2.2 Systems Operation

This event, unless otherwise stated, assumes and takes credit for normal functioning of plant instrumentation and controls, and plant protection and reactor protection systems.

The reactor is subjected to a complex sequence of events when the plant loses all external ac power. Estimates of the responses of the various reactor systems (assuming loss of all grid connections) provide the following simulation sequence:

a. The recirculation pumps are tripped at a reference time, t = 0, with normal coastdown times. Also, at t = 0 a generator load rejection is initiated. This load rejection immediately causes the TCVs to close and causes a scram

b. At approximately 2 sec, independent MSIV closure and scram are initiated due to loss of power to the respective solenoids

c. At approximately 4 sec, feedwater pump trips are initiated.

Operation of the HPCI and RCIC system functions is not simulated in this analysis. Their operation occurs at some time beyond the primary concerns of fuel thermal margin and overpressure effects of this analysis.

Fermi 2 has no direct isolation signal derived from the loss of all grid connections. However, the MSIV closure analysis assumes that the valves start to close 2 sec after the loss of offsite power.

The MSIV isolation logic is supplied with 120-V ac power derived from the RPS motor generator (MG) sets. Because the drive motor of each MG set is de-energized when there is a loss of offsite power, each MG set output will trip as the output voltage and/or the frequency decays. This trip occurs approximately 2 sec after the initial loss of power to the MG set. Each MSIV actuator is equipped with ac- and dc-operated solenoid valves to prevent the inadvertent closure of an isolation valve on the loss of a single ac-power feed and to permit online testing of the isolation logic.

15.2.6.3 Core and Systems Performance

15.2.6.3.1 Mathematical Model

Only a qualitative analysis is provided.

15.2.6.3.2 Input Parameters and Initial Conditions

Only a qualitative evaluation is provided.

15.2.6.3.3 Qualitative Results

Loss of all grid connections essentially takes on the characteristic response of a full load rejection with turbine bypass operable. The generator load rejection wihout turbine bypass operable is discussed in Subsection 15.2.2.

15.2.6.3.4 Consideration of Uncertainties

The most conservative characteristics of protection features are assumed. Any deviations in actual plant performance are expected to make the results of this event less severe.

Following main steam line isolation, the reactor pressure is expected to increase until the SRV setpoint is reached. At this time the valves operate in a cyclic manner to discharge the decay heat to the suppression pool.

15.2.6.4 Barrier Performance

Safety/relief valves open in the pressure relief mode of operation as the pressure increases beyond their setpoints. The pressure in the dome is well below the vessel pressure limit of 1375 psig.

15.2.6.5 Radiological Consequences

While the consequences of this event do not result in fuel failure, the event does result in the discharge of normal coolant activity to the suppression pool via SRV operation. Since this activity is contained in the primary containment, there is no exposure to operating personnel. Since this event does not result in an uncontrolled release to the environment, the plant operator can choose to leave the activity bottled up in the primary containment or discharge it to the environment under controlled meteorological and release conditions. If purging of the primary containment is chosen, the release will have to be in accordance with established Technical Specifications; therefore, this event, at the worst, will result in only a small increase in the yearly integrated exposure level.

Table 15.2.6-1 TYPICAL SEQUENCE OF EVENTS FOR LOSS OF ALL GRID CONNECTIONS

Estimated Time (sec)	Event
(-)0.01	Loss of grid causes turbine generator to detect a loss of electrical load.
0	Control valve fast closure is initiated.

Table 15.2.6-1 TYPICAL SEQUENCE OF EVENTS FOR LOSS OF ALL GRID CONNECTIONS

Estimated Time (sec)	Event
0	Turbine generator power load unbalance trip initiates main turbine bypass system operation.
0	Recirculation system pump motors are tripped.
0.03	Fast control valve closure initiates a reactor scram trip.
0.1	Turbine bypass valves open.
0.2	Turbine control valves are fully closed.
2.0	MSIVs start to close.
2.6	Group 1 SRVs actuate.
2.8	Group 2 SRVs actuate.
3.0	Emergency diesel generator (EDG) starts.
4.0	Feedwater turbine trips off.
10.5	Group 1 SRVs close.
12.0	Sensed water level reaches Level 3. Containment isolation is initiated.
13.0	EDG breaker close.
60	Sensed water level reaches Level 2. HPCI/RCIC systems are initiated.
120	Core water level is reestablished.

15.2.7 Loss of Feedwater Flow

15.2.7.1 Identification of Causes and Frequency Classification

15.2.7.1.1 Identification of Causes

A loss of feedwater flow could occur from pump failures, feedwater controller failures, operator errors, or reactor system variables, such as high vessel water level (L8) trip signal.

15.2.7.1.2 Frequency Classification

This transient disturbance is categorized as an incident of moderate frequency.

15.2.7.2 Sequence of Events and Systems Operation

15.2.7.2.1 Sequence of Events

Table 15.2.7-1 lists the typical sequence of events.

15.2.7.2.2 Systems Operation

Loss of feedwater flow results in a reduction of vessel inventory, which causes the vessel water level to drop. The first corrective action is the low level (L3) scram trip actuation. The RPS responds within 1 sec after this trip to scram the reactor. The low level (L3) scram trip function meets single failure criterion.

Containment isolation, when it occurs, also initiates a main steam isolation valve position scram trip signal as part of the normal isolation event. The reactor, however, is already scrammed and shut down by this time.

Credit is taken for operation of the SRV (low setpoint) to remove decay heat, since the bypass becomes ineffective due to main steam line isolation.

15.2.7.3 Core and System Performance

15.2.7.3.1 Mathematical Model

Only a qualitative analysis is provided.

15.2.7.3.2 Input Parameters and Initial Conditions

Only a qualitative evaluation is provided.

15.2.7.3.3 Qualitative Results

Feedwater flow terminates in approximately 5 seconds and subcooling decreases, causing a reduction in core power level and pressure. As power level is lowered, the turbine steam flow starts to drop off because the pressure regulator is attempting to maintain pressure for the first 7 sec or so. Water level continues to drop until the vessel level (L3) scram trip setpoint is reached, whereupon the reactor is shut down. As the vessel water level drops to the L2 trip setpoint, the recirculation system is tripped, and HPCI and RCIC operation is initiated (not simulated). Minimum critical power ratio remains considerably above the safety limit, since increases in heat flux are not experienced.

15.2.7.3.4 Consideration of Uncertainties

End-of-cycle scram characteristics are assumed. This transient is most severe from high power conditions because the rate of level decrease is greatest and the amount of stored and decay heat to be dissipated is highest.

Operation of the RCIC or HPCI systems is not included in the simulation of the first 50 sec of this transient, since startup of these pumps occurs in the latter part of this time period; therefore, these systems have no significant effects on the results of this transient.

15.2.7.4 Barrier Performance

The consequences of this event do not result in any temperature or pressure transient in excess of the criteria for which the fuel, pressure vessel, or containment are designed; therefore, these barriers maintain their integrity and function as designed.

15.2.7.5 Radiological Consequences

The consequences of this event do not result in any fuel failure.

TABLE 15.2.7-1 TYPICAL SEQUENCE OF EVENTS FOR LOSS OF ALL FEEDWATER FLOW

Estimated Time (sec)	Event
0	Trip of all feedwater pumps is initiated.
3.6	Recirculation flow is run back to the low end of the flow control range.
5.0	Feedwater flow decays to zero.
6.8	Vessel water level (L3) trip initiates scram trip.
25.5	Vessel water level (L2) trip initiates containment isolation. (The low water level MSIV closure setpoint is at L1).
25.5	Vessel water level (L2) trip initiates HPCI and RCIC operation (not simulated, however).
28.5	The MSIVs are fully closed.[a]

[a] The low water level MSIV closure has been changed from L2 to L1. However, no significant impact on peak pressure and thermal margin will result from the change. Therefore, no reanalysis is required.

15.2 INCREASE IN REACTOR PRESSURE

REFERENCES

1. General Electric Co., "General Electric Standard Application for Reactor Fuel, GESTAR II," NEDE-24011-P-A, (Latest Approved Revision as identified in the COLR).

15.3 DECREASE IN REACTOR COOLANT SYSTEM FLOW RATE

Three transients are evaluated under this analytical category:

a. Recirculation pump trip

b. Recirculation flow control failure

c. Recirculation pump seizure

None of these transients are analyzed on a cycle-specific basis. A qualitative description of results is provided for each event determined to be nonlimiting with respect to core performance.

15.3.1 Recirculation Pump Trip

15.3.1.1 Identification of Causes and Frequency Classification

15.3.1.1.1 Identification of Causes

Recirculation pump motor operation can be tripped off by design for intended reduction of other transient core and reactor coolant pressure boundary effects as well as randomly by unpredictable operational failures. Intentional tripping will occur in response to the following:

a. Reactor vessel water level L2 setpoint trip

b. Failure to scram high pressure setpoint trip

c. Motor branch circuit overcurrent protection

d. Motor overload protection

e. Suction block valve not fully open.

Random tripping will occur in response to the following:

a. Operator error

b. Loss of electrical power source to the pumps

c. Equipment or sensor failures and malfunctions which initiate the above intended trip response.

15.3.1.1.2 Frequency Classification

The trip of one or two recirculation pump(s) is categorized as one of moderate frequency.

15.3.1.2 Sequence of Events and Systems Operation

15.3.1.2.1 Sequence of Events

15.3.1.2.1.1 Trip of One Recirculation Pump

Table 15.3.1-1 lists a typical sequence of events.

15.3.1.2.1.2 Trip of Both Recirculation Pump Motors

Table 15.3.1-2 lists a typical sequence of events.

15.3.1.2.2 Systems Operation

Analysis of these events assumes normal functioning of plant instrumentation and controls and of plant protection and reactor protection systems. Specifically, these transients take credit for vessel level (L8) instrumentation to trip the turbine. Reactor scram is tripped from the turbine stop valves. High system pressure is limited by operation of the pressure relief valve system.

15.3.1.3 Core and System Performance

15.3.1.3.1 Mathematical Model

Only a qualitative evaluation is provided.

15.3.1.3.2 Input Parameters and Initial Conditions

Only a qualitative evaluation is provided.

Pump motors and pump rotors are normally simulated with minimum specified rotating inertias.

The design jet pump efficiency is used in the analysis. However, the minimum pump inertia (lower bound) is used in the analysis for conservatism so that the actual pump flow coastdown rate is slower than the calculated values.

The actual pump motor rotating inertia must meet the inertia requirement in the design specification.

15.3.1.3.3 Qualitative Results

15.3.1.3.3.1 Trip of One Recirculation Pump

No scram is initiated directly by pump trip. The vessel water level swell due to rapid flow coastdown may reach the high level trip, thereby shutting down the main turbine and feed pump turbines and indirectly initiating scrams as a result of the main turbine trip. Subsequent events, such as main steam line isolation and initiation of reactor core isolation cooling (RCIC) and high pressure coolant injection (HPCI) systems occurring late in this event, have no significant effect on the results. This is not a limiting transient and the consequences do not result in any fuel failures.

15.3.1.3.3.2 Trip of Both Recirculation Pumps

No scram is initiated directly by pump trip. The vessel water level swell due to rapid flow coastdown is expected to reach the high level trip, thereby shutting down the main turbine and feed pump turbines and indirectly initiating scrams as a result of the main turbine trip.

Subsequent events, such as main steam line isolation and initiation of RCIC and HPCI systems occurring late in this event, have no significant effect on the results. This is not a limiting transient and the consequences do not result in any fuel failures.

15.3.1.3.4 Consideration of Uncertainties

Initial conditions chosen for these analyses are conservative and tend to force analytical results to be more severe than expected under actual plant conditions.

Actual pump and pump motor drive line rotating inertias are expected to be somewhat greater than the minimum design values assumed in this simulation. Actual plant deviations regarding inertia are expected to lessen the severity as analyzed. Minimum design inertias were used as well as the least negative void coefficient, since the primary interest is in the flow reduction.

15.3.1.4 Barrier Performance

15.3.1.4.1 Trip of One Recirculation Pump

The results indicate a final reduction in system pressures from the initial conditions. Therefore, the reactor coolant pressure boundary (RCPB) barrier is not threatened.

15.3.1.4.2 Trip of Both Recirculation Pumps

The results indicate that peak pressures stay well below the 1375 psig limit allowed by the applicable code. Therefore, the RCPB is not threatened.

15.3.1.5 Radiological Consequences

The consequences of this event do not result in any fuel failure.

TABLE 15.3.1-1 TYPICAL SEQUENCE OF EVENTS FOR TRIP OF ONE RECIRCULATION PUMP MOTOR

Estimated Time (sec)	Event
0	Trip of one recirculation pump is initiated.
4.5	Vessel water level (L8) trip initiates turbine trip.[a]
4.5	Feedwater pumps are tripped off.
4.5	Turbine trip initiates bypass operation.
4.5	Reactor scram is initiated.
6.5	Moisture separator reheater flow starts to decay.
9.5	Reheater flow decays to zero.
20.0	Core flow and power level stabilize at new equilibrium conditions.

[a] A level 8 trip is not normally expected after the trip of a single recirculation pump. The table presents the worst-case scenario.

TABLE 15.3.1-2 TYPICAL SEQUENCE OF EVENTS FOR TRIP OF BOTH RECIRCULATION PUMP MOTORS

Estimated Time (sec)	Event
0	Trip of both recirculation pumps is initiated.
3.1	Vessel water level (L8) trip initiates turbine trip.
3.1	Feedwater pumps are tripped off.
3.1	Turbine trip initiates bypass operation.
3.1	Turbine trip initiated reactor scram trip.
5.1	Moisture separator reheater flow starts to decay.
8.1	Moisture separator reheater flow decays to zero.
20.0	Core flow and power level stabilize at new equilibrium conditions.
190.0	Vessel water (L2) setpoint is reached (not simulated).
220.0	The HPCI and RCIC flow enters vessel (not simulated).

15.3.2 Recirculation Flow Control Failure - Decreasing Flow

15.3.2.1 Identification of Causes and Frequency Classification

15.3.2.1.1 Identification of Causes

Failure of an individual recirculation motor generator (MG) set speed control signal (one per loop) or failure of the positioning control of an individual scoop tube positioner can result in a rapid flow decrease in only one recirculation loop.

15.3.2.1.2 Frequency Classification

This transient disturbance is categorized as an incident of moderate frequency.

15.3.2.2 Sequence of Events and Systems Operation

15.3.2.2.1 Sequence of Events

A typical sequence of events for this transient is similar to and can never be more severe than that listed in Table 15.3.1-1 for the trip of one recirculation pump.

15.3.2.2.2 Systems Operation

Normal plant instrumentation and control is assumed to function. Credit is taken for scram in response to vessel high water level (L8) trip if it occurs. This is true for both the single and master controller failure events.

15.3.2.3 Core and System Performance

15.3.2.3.1 Mathematical Model

Only a qualitative evaluation is provided.

15.3.2.3.2 Input Parameters and Initial Conditions

Only a qualitative evaluation is provided. Typically a less negative void coefficient is used for these analyses.

15.3.2.3.3 Qualitative Results

In the case of failure of one control demand signal, the scoop tube positioners are designed so that the flow change rate limit is determined by the individual stroking rate, which is approximately 25 percent/sec. This case is similar to the trip of one recirculation pump, evaluated in Subsection 15.3.1.3.3.1, and is less severe than the transient that results from the simultaneous trip of both recirculation pumps.

15.3.2.3.4 Consideration of Uncertainties

Initial conditions chosen for these analyses are conservative and tend to force analytical results to be more severe than otherwise expected. These analyses, unlike the pump trip series, will be unaffected by deviations in pumps, pump motor, and drive line inertias, since it is the flow demand signal that causes rapid recirculation decrease.

15.3.2.4 Barrier Performance

The barrier performance considerations for these events are the same as those discussed in the section on recirculation pump trips.

15.3.2.5 Radiological Consequences

The consequences of this event do not result in fuel failure.

15.3.3 Recirculation Pump Seizure

15.3.3.1 Identification of Causes and Frequency Classification

The seizure of a recirculation pump is considered in philosophical, probability, and functional senses as a design basis accident event. It has been evaluated as a very mild accident in relation to other design basis accidents, such as the LOCA. The analysis has been conducted with consideration to a single or two loop operation.

The recirculation pump is designed to very rigid standards and codes. It is very well instrumented, monitored, and controlled to ensure safe and orderly operation. It is designed to meet strict seismic and environmental conditions. It is protected from external disturbances that could negate its inherent capabilities to preclude a self destruction (seizure or shaft impairment). Refer to Subsection 5.5.1 for specific mechanical considerations and to Chapter 7 for electrical aspects.

The seizure event postulated certainly would not be the mode failure of such a device. Safe shutdown components (e.g., electrical breakers, protective circuits) would preclude an instantaneous seizure event.

15.3.3.1.1 Identification of Causes

The case of recirculation pump seizure represents the extremely unlikely event of instantaneous stoppage of the pump motor shaft of one recirculation pump. This event produces a very rapid decrease of core flow as a result of the large hydraulic resistance introduced by the stopped rotor.

15.3.3.1.2 Frequency Classification

This event is considered to be a limiting fault in its category but it results in effects that can easily satisfy more frequent event limits (i.e., infrequent incident classification).

15.3.3.2 Sequence of Events and Systems Operation

15.3.3.2.1 Sequence of Events

Table 15.3.3-1 lists the typical sequence of events.

15.3.3.2.2 Systems Operation

To properly simulate the expected sequence of events, the analysis of this event assumes normal functioning of plant instrumentation and controls and plant protection and reactor protection systems. Operation of safe shutdown features, although not included in this simulation, is expected to be utilized to maintain adequate water level.

15.3.3.3 Core and System Performance

15.3.3.3.1 Mathematical Model

Only a qualitative evaluation is provided.

15.3.3.3.2 Input Parameters and Initial Conditions

Only a qualitative evaluation is provided.

For the purpose of evaluating consequences to the fuel thermal limits, this transient event is assumed to occur as a consequence of an unspecified, instantaneous stoppage of one recirculation pump shaft while the reactor is operating at rated NBR power. Also, the reactor is assumed to be operating at thermally limited conditions.

The void coefficient is adjusted to the most conservative value, that is, the least negative value.

15.3.3.3.3 Qualitative Results

Core coolant flow drops rapidly. The MCPR does not decrease significantly before fuel surface heat flux begins dropping enough to restore greater thermal margins. The level swell produces a trip of the main and feedwater turbines, and stop valve closure scram. Since, after MCPR occurs, heat flux decreases much more rapidly than the rate at which heat is removed by the coolant, the scram conditions impose no threat to thermal limits. Additionally, the bypass valves limit the pressure well within the range allowed by the ASME vessel code. Therefore the reactor coolant pressure boundary is not threatened by overpressure. The consequences from the event are rather mild even if this is classified as a moderately frequent event.

15.3.3.3.4 Consideration of Uncertainties

Considerations of uncertainties are included in the GETAB analysis.

15.3.3.4 Barrier Performance

Opening the bypass valves limits the pressure well within the range allowed by the ASME vessel code. Therefore the reactor coolant pressure boundary is not threatened by overpressure.

15.3.3.5 Radiological Consequences

The consequences of this event do not result in fuel failure.

15.3.3.6 Recirculation Pump Seizure With Coincident Loss of Offsite Power

The recirculation pump seizure accident with coincident loss of offsite power is similar to the transient discussed in Subsection 15.2.6 (loss of ac power) except that the feedwater is tripped earlier and the core flow coastdown is faster. Thus, actual expected core power response of this postulated accident is less severe than that evaluated in Subsection 15.2.6 due to the faster core flow coastdown. No fuel failure is expected. Failure of nonsafety grade equipment would not make the core performance and/or radiological consequences of this postulated accident more limiting than the LOCA addressed in the UFSAR. Therefore, no additional evaluations are considered necessary.

The recirculation pump seizure accident was reviewed on a generic basis by the utility Licensing Review Group (LRG) and the NRC as LRG issue RSB-21. The issue was satisfactorily resolved with the commitment to perform Technical Specifications surveillance on the applicable nonsafety grade equipment involved (Level 8 trip and turbine bypass system) and with the knowledge that generic analyses had been performed by GE to show that nonreliance on the nonsafety grade equipment did not significantly affect the overall safety analysis (the postulated accident was still bounded by other analyzed accident scenarios).

TABLE 15.3.3-1 TYPICAL SEQUENCE OF EVENTS FOR SEIZURE OF ONE RECIRCULATION PUMP MOTOR

Estimated Time (sec)	Event
0	Single pump seizure is initiated.
2.6	Vessel level (L8) trip initiates turbine trip.
2.6	Feedwater pumps are tripped off.
2.6	Turbine trip initiates bypass operation.
2.6	Turbine trip initiates reactor scram trip.
4.6	Moisture separator reheater flow starts to decay.
6.4	Vessel water level reaches Level 3 (L3) setpoint.
7.6	Moisture separator reheater flow decays to zero.
65.0	Vessel water reaches Level 2 (L2) setpoint (not simulated).
75.0	The HPCI and RCIC flow enters the vessel (not simulated).

15.4 REACTIVITY AND POWER DISTRIBUTION ANOMALIES

15.4.1 Rod Withdrawal Error - Low Power

15.4.1.1 Control Rod Removal Error During Refueling

15.4.1.1.1 Identification of Causes and Frequency Classification

The event considered here is inadvertent criticality caused by the complete withdrawal or removal of the most reactive rod during refueling. The probability of occurrence of the initial causes alone is considered low enough to warrant the categorization of this event as an infrequent incident, since there is no postulated set of circumstances that results in an inadvertent rod withdrawal error while in the refuel mode.

15.4.1.1.2 Sequence of Events and Systems Operation

15.4.1.1.2.1 Initial Control Rod Removal

During refueling operations, safety system interlocks provide assurance that inadvertent criticality does not occur because a control rod has been removed or is withdrawn in coincidence with another control rod.

15.4.1.1.2.2 Fuel Insertion With Control Rod Removed

To minimize the possibility of loading fuel into a cell containing no control rod, all control rods are required to be fully inserted when fuel is being loaded into the core. This requirement is backed up by refueling interlocks on rod withdrawal and movement of the refueling platform. When the mode switch is in the refuel position, the interlocks prevent the platform from being moved over the core if a control rod is withdrawn and fuel is on the hoist. Similarly, if the refueling platform is over the core and fuel is on the hoist, control rod motion is blocked by the interlocks.

15.4.1.1.2.3 Second Control Rod Removal

When the platform is not over the core (or fuel is not on the hoist), and the mode switch is in the refuel position, only one control rod can be withdrawn. Any attempt to withdraw a second rod results in a rod block by the refueling interlocks. Since the core is designed to meet shutdown requirements with the highest worth rod withdrawn, the core remains subcritical even with one rod withdrawn.

15.4.1.1.2.4 Control Rod Removal Without Fuel Removal

Finally, the design of the control rod, which incorporates the velocity limiter, does not physically permit the upward removal of the control rod without the simultaneous or prior removal of four adjacent fuel bundles. This precludes any hazardous condition.

15.4.1.1.3 Core and System Performance

Since the probability of inadvertent criticality during refueling is precluded, the core and system performance was not analyzed. However, withdrawal of the highest worth control

rod during refueling results in a positive reactivity insertion, but not enough to cause criticality. This is verified experimentally by performing shutdown margin checks (see Subsection 4.3.2 for a description of the methods and results of the shutdown margin analysis). Additional reactivity insertion is precluded by interlocks (see Subsection 7.6.1.1). As a result, no radioactive material is ever released from the fuel; it is therefore unnecessary to assess any radiological consequences.

No mathematical models are involved in this event. Input parameters or initial conditions are not required, as there are no results to report. Consideration of uncertainties is not appropriate.

15.4.1.1.4 Barrier Performance

The barrier performance was not evaluated for this event, since it is highly localized and does not result in any change in the core pressure or temperature.

15.4.1.1.5 Radiological Consequences

Radiological consequences were not evaluated for this event, since no radioactive material is released from the fuel.

15.4.1.2 Continuous Rod Withdrawal During Reactor Startup

15.4.1.2.1 Identification of Causes and Frequency Classification

The probability of occurrence of initial causes or errors alone in this event is low enough to warrant its being categorized as an infrequent incident. The probability of further development of this event is extremely low because it is contingent upon the failure of the rod worth minimizer (RWM) concurrent with a high worth, out-of-sequence rod selection contrary to procedure, coupled with lack of operator response to the RWM continuous alarm annunciations prior to safety system actuation.

15.4.1.2.2 Sequence of Events and System Operation

Before the continuous rod withdrawal during reactor startup is possible, the first part of the sequence of events presented in Table 15.4.1.2-1 must occur.

The RWM constraints on the control rod sequences prevent the continuous withdrawal of an out-of-sequence rod during the reactor startup. With the RWM inoperable a second licensed operator or other technically qualified member of the unit technical staff who is present at the reactor control console verifies the control rod movement compliance with the prescribed control rod pattern. The RWM is programmed to the banked position withdrawal sequence (BPWS) to reduce control rod worths to a value that would be acceptable in the event of a control rod drop accident (see Subsection 15.4.9). The generic analyses for the continuous control rod withdrawal transient in the startup range are included in Reference 1.

As generically described in Reference 2, the range of application of BPWS is between 100 percent control rod density (all rods in) and the low power set point, i.e., 10 percent of rated core power. In this low power range the control rods are effectively withdrawn in the form of stepped bank patterns. Because the control rods are withdrawn in the banked patterns, the incremental rod worth is maintained at low values such that the resultant peak fuel enthalpies

due to the continuous withdrawal of an out-of-sequence control rod is less than the licensing basis of 170 cal/g.

The generic analysis of the continuous control rod withdrawal transient in the startup range are included in Reference 1. Table 15.4.1.2-1 shows the sequence of events for the continuous rod withdrawal transient considered.

15.4.1.2.3 Core and System Performance

The performance of the RWM forces adherence to the BPWS constraints applied to control rod withdrawals, thus eliminating the rod withdrawal error in the low power range as a transient of any concern.

The methods and design basis used for performing the detailed analyses for this transient are documented in Reference 1.

15.4.1.2.4 Barrier Performance

An evaluation of the barrier performance was not made for this event, since this is a highly localized event with no significant change in core temperature or pressure.

15.4.1.2.5 Radiological Consequences

An evaluation of the radiological consequences is not required for this event, since no radioactive material is released from the fuel.

TABLE 15.4.1.2-1 TYPICAL SEQUENCE OF EVENTS FOR CONTINUOUS ROD WITHDRAWAL DURING REACTOR STARTUP

Estimated Elapsed Time (sec)	Event
-	The reactor is critical and operating in the startup range.
>0	The operator selects and withdraws an out-of-sequence control rod at the maximum normal drive speed of 3.6 ips.
4	Both the RWM and operator check off system fail to block the selection (selection error) and continuous withdrawal (withdrawal error) of the out-of-sequence rod.
4-8	The reactor scram is initiated by the intermediate range monitor (IRM) system or the average power range monitor (APRM) system.
5-9	The prompt power burst is terminated by a combination of Doppler and/or scram feedback.
10	The transient is finally terminated by the scram of all rods, including the control rod being withdrawn.

15.4.2 Rod Withdrawal Error at Power

The control rod withdrawal error at power condition has been identified in GESTAR II (Reference 3) as one of the more likely events to limit operation from MCPR consideration; therefore, it is typically analyzed on a cycle-specific basis.

15.4.2.1 Identification of Causes and Frequency Classification

15.4.2.1.1 Identification of Causes

While operating in the power range in a normal mode of operation, the reactor operator makes a procedural error and withdraws a high worth control rod until the rod block monitor (RBM) system inhibits further withdrawal.

15.4.2.1.2 Frequency Classification

The probability of this event is considered low enough to warrant its categorization as an infrequent incident. However, because of the lack of sufficient frequency data base, this transient disturbance is analyzed as an incident of moderate frequency until its frequency can be further evaluated and justified.

15.4.2.2 Sequence of Events and Systems Operation

15.4.2.2.1 Sequence of Events

The sequence of events for this transient is presented in Table 15.4.2-1. No operator actions are required during this event; however, operator actions expected to occur are shown in the table. This event results in a local power increase due to a reactivity rise from the decrease in control rod poison material. The rod block monitoring system blocks the further withdrawal of the error control rod and terminates the event.

15.4.2.2.2 Systems Operation

This event is localized to a small portion of the core. Therefore, although reactor control and instrumentation is assumed to function normally, credit is taken only for the RBM system. A discussion of the event follows.

While operating in the power range in a normal mode of operation (except as noted in Subsection 15.4.2.3.2), the reactor operator makes a procedural error and withdraws a control rod until the RBM system inhibits further withdrawal.

Under most normal operating conditions, no operator action is required when a rod withdrawal error is made with average rod worth, since the transient that would occur would be very mild. If the local power increase is excessive when a high worth rod is withdrawn, the nearby local power range monitors (LPRM) would detect this phenomenon and sound an alarm. The operator is suppose to acknowledge this alarm and take appropriate action to rectify the situation.

If the rod withdrawal error were severe enough, and the operator continues to withdraw the control rod, the RBM system would block further withdrawal of the control rod before the fuel cladding integrity safety limit is reached.

15.4.2.2.3 Rod Block Monitor System Operation

The RBM system is designed to automatically block control rod withdrawal that could violate the Technical Specification safety limit during a control rod withdrawal error transient. Upon operator selection of a control rod, the system begins comparing RBM signals to predefined trip levels. The RBM signals consist of the average of selected B, C, and D level local power range monitor (LPRM) in-core signals in the strings immediately surrounding the selected control rod normalized to 100%. An increase in the RBM signal during rod withdrawal indicates a local power increase, and a corresponding local thermal margin decrease. The rod block trip levels are established such that the thermal margin decrease will be less than available margin. If an upscale rod block is received (rod withdrawal permissive removed), the operator verifies that he is in compliance with fuel thermal limits before resetting the rod block trip. Once reset, the RBM system reinitializes and allows further control rod withdrawal consistent with design basis thermal margin reduction increments.

The RBM has three upscale trip levels which vary as a step function of core power. Each trip level is enforced over a range of core power levels, with the highest trip corresponding to the lowest power and the lowest trip corresponding to the highest power. This allows longer withdrawals at low power where thermal margins are high, and only short withdrawals at high power. The trip levels and their corresponding power level ranges can be changed based on the thermal margin reported in the cycle specific Supplemental Reload Licensing Report. The core power input used to automatically select the applicable RBM trip is provided by the Average Power Range Monitoring (APRM) system.

15.4.2.3 Core and System Performance

15.4.2.3.1 Mathematical Model

For this transient, the reactivity insertion rate is very slow; therefore, it is adequate to assume that the core has sufficient time to equilibrate (i.e., that both the neutron flux and heat flux are in phase). With the use of the above assumption, this transient is calculated by using a steady-state, three-dimensional, coupled, nuclear thermal hydraulics computer program. All spatial effects are included in the calculation.

The primary output from this code, in addition to the basic nuclear parameters, is as follows: the variation of the linear heat generation rate (LHGR); the variation of the minimum critical power ratio (MCPR); the total reactor power; and the variation of the in-core instruments during the transient. A detector response code uses the instrument responses to predict the rod block monitor action under the specified condition for the rod withdrawal error.

The analytical methods and assumptions used in evaluating the consequences of this accident are considered to provide a realistic, yet conservative, assessment of the consequences.

15.4.2.3.2 Input Parameters and Initial Conditions

The number of possible rod withdrawal error (RWE) transients is extremely large because of the number of control rods and the wide range of core characteristics and power levels. With the improved RBM system, the RBM response is well correlated to MCPR response.

Because of this, a statistical analyses is performed based on the large amount of data available from past reload, and a generic set of bounding values of DCPR as a function of RBM setpoints is established. Also, additional analyses may be supplemented to further assure that the generic statistical result is applicable.

The generic rod withdrawal error database was drawn from actual plant states and covered the spectrum of plant designs, fuel designs and power densities. Relevant cases were selected with minimum margins to MCPR and MAPLHGR limits in bundles near deep control rods to yield meaningful results. For each RWE case, the analytical outputs (MCPR, MAPLHGR, LPRM readings, and gross core power as a function of error rod position) became inputs to the statistical analysis. Furthermore, numerous simulated RWEs were generated from each rod pattern case by randomly varying the initial position of the error rod and the location and number of failed LPRMs. From these simulated RWEs (per each rod pattern case), the mean and standard deviation and components of the standard deviation were calculated for each RBM setpoint. Here the RBM setpoint is the permissible change of local power as computed by the RBM assigned LPRMs for the selected control rod. All these were used to determine the mean and standard deviation of the entire database.

The final RBM setpoints are determined with the requirement that there is 95% confidence that 95% of the RWE consequence will be bounded if the required MCPR is 1.20, 1.25, 1.30, or 1.35. This statistical analyses conclude that the RWE transients can be protected by three RBM protective settings in three power ranges. See Reference 5 for more details on the bounding MCPR value or for more details of this statistical analysis.

This event is localized to a small portion of the core. Therefore, although reactor control and instrumentation is assumed to function normally, credit is taken only for the RBM system. A discussion of the event follows.

While operating in the power range in a normal mode of operation (except as noted in Subsection 15.4.2.3.2), the reactor operator makes a procedural error and withdraws a control rod until the RBM system inhibits further withdrawal.

Under most normal operating conditions, no operator action is required when a rod withdrawal error is made with average rod worth, since the transient that would occur would be very mild. If the local power increase is excessive when a high worth rod is withdrawn, the nearby local power range monitors (LPRM) would detect this phenomenon and sound an alarm. The operator is suppose to acknowledge this alarm and take appropriate action to rectify the situation.

If the rod withdrawal error were severe enough, the RBM system would sound alarms, at which time the operator would acknowledge the alarms and take corrective action. Even for extremely severe (i.e., those involving highly abnormal control rod patterns or operating conditions in which it is assumed that the operator ignores all alarms and warnings and continues to withdraw the control rod), the RBM system would block further withdrawal of the control rod before the fuel reached the point of boiling transition or the 1 percent plastic strain limit imposed on the clad.

15.4.2.3.3 Qualitative Results

To assure the rod withdrawal error transients are acceptable, the RBM setpoints meet the following requirements:

Let required MCPR = 1.25 at rated conditions

Power Range	Analytical Limit	(permissible change of local power)
> 85 – 100%	110.2%	
> 65 - 85%	115.2%	
> 30 – 65%	120%	

15.4.2.3.4 Consideration of Uncertainties

The uncertainties are included in the statistical analyses.

15.4.2.4 Barrier Performance

The barrier performance was not evaluated for this event, since this is a localized occurrence with very little change in the gross core characteristics. Typically, an increase in total core power is less than 5 percent, and the changes in pressure are negligible.

15.4.2.5 Radiological Consequences

An evaluation of the radiological consequences is not required for this event, since no radioactive material is released from the fuel.

TABLE 15.4.2-1 TYPICAL SEQUENCE OF EVENTS - ROD WORTH EVENT IN POWER RANGE

Approximate Elapsed Time (sec)	Event
0	Core is assumed to be operating at rated conditions.
0	Operator selects and withdraws the maximum worth control rod.
1	The total core power and the local power in the vicinity of the control rod increase.
5	The LPRM system indicates excessive localized peaking.
5	The operator ignores warning and continues withdrawal.
15	The RBM system indicates excessive localized peaking.

TABLE 15.4.2-1 TYPICAL SEQUENCE OF EVENTS - ROD WORTH EVENT IN POWER RANGE

Approximate Elapsed Time (sec)	Event
15	The operator ignores warning and continues withdrawal.
20	The RBM system initiates a rod block inhibiting further withdrawal.
40	Reactor core stabilizes at higher core power level.
60	Operator reinserts control rod to reduce core power level.
80	Core stabilizes at rated conditions.

15.4.3 Control Rod Maloperation (System Malfunction or Operator Error)

This event is included in the evaluation cited in Subsections 15.4.1 and 15.4.2.

15.4.4 Abnormal Startup of Idle Recirculation Pump

15.4.4.1 Identification of Causes and Frequency Classification

15.4.4.1.1 Identification of Causes

This action results directly from the operator's manual action to initiate pump operation. It assumes that the remaining loop is already operating.

15.4.4.1.1.1 Normal Restart of Recirculation Pump at Power

This transient is categorized as an incident of moderate frequency.

15.4.4.1.1.2 Abnormal Startup of Idle Recirculation Pump

This transient is categorized as an incident of moderate frequency.

15.4.4.2 Sequence of Events and Systems Operation

15.4.4.2.1 Sequence of Events

Table 15.4.4-1 lists the typical sequence of events.

15.4.4.2.2 Systems Operation

This event assumes and takes credit for normal functioning of plant instrumentation and control as well as plant protection and reactor protection systems. In particular, credit is taken for high flux scram to terminate the transient. No engineered safety feature (ESF) action occurs as a result of the transient.

15.4.4.3 Core and System Performance

15.4.4.3.1 Mathematical Model

Only a qualitative evaluation is provided.

15.4.4.3.2 Input Parameters and Initial Conditions

When starting an idle loop with one pump already running, Technical Specifications require heating the idle recirculation loop to within 50°F of core inlet temperature prior to loop startup, to be consistent with the assumptions of the reactor vessel nozzle and reactor recirculation system ASME Upset category stress analysis and partial power fuel thermal limit analyses.

The idle recirculation pump suction valve is open, but the pump discharge valve is closed. The idle pump fluid coupler is at a setting that approximates 50 percent generator speed demand.

15.4.4.3.3 Qualitative Results

Following the transient response to the incorrect startup of a cold, idle recirculation loop, the pump begins to move and a flow surge from the jet pump diffusers causes the core inlet flow to rise sharply. The neutron flux peak would reach the fixed average power range monitor (APRM) flux setpoint and reactor scram is initiated. Nuclear system pressures do not increase significantly. The water level does not reach either the high or low level setpoints prior to APRM high flux scram.

After the initiation of the startup of the idle recirculation loop pump transient, the core flow increases and thus reduces the void fraction in the core. Because of the negative void reactivity coefficient, the void reactivity increases and causes the neutron flux to increase. The increase of power level then produces more void and reduces the void reactivity and the neutron flux. This is not a limiting transient.

15.4.4.3.4 Consideration of Uncertainties

This transient is evaluated for an initial power level much higher than that expected for the actual event. The much slower thermal response of the fuel mitigates the effects of the rather sharp neutron flux spike; and even in this high range of power, no threat to thermal limits is possible.

15.4.4.4 Barrier Performance

No evaluation of barrier performance is required for this event, because no significant pressure increases are incurred during this transient.

15.4.4.5 Radiological Consequences

An evaluation of the radiological consequence is not required for this event, since no radioactive material is released from the fuel.

TABLE 15.4.4-1 TYPICAL SEQUENCE OF EVENTS FOR STARTUP OF IDLE RECIRCULATION LOOP

Approximate Elapsed Time (sec)	Event
0	Start pump motor.
8	Startup loop flow reverses.
10	Reactor high flux scram is initiated.
13	Turbine control valves start to close upon falling turbine pressure.
20	Turbine control valves fully close. Turbine pressure is below pressure regulator setpoints.
> 45	Core inlet flow and vessel pressure settle at a new steady state.

15.4.5 Recirculation Flow Control Failure With Increasing Flow

15.4.5.1 Identification of Causes and Frequency Classification

15.4.5.1.1 Identification of Causes

Failure of an individual recirculation motor generator (MG) set speed control signal (one per loop) system (maximum demand) or failure of the positioning control of an individual scoop tube positioner can result in a rapid flow increase in only one recirculation loop.

15.4.5.1.2 Frequency Classification

This transient disturbance is classified as an incident of moderate frequency.

15.4.5.2 Sequence of Events and Systems Operation

15.4.5.2.1 Sequence of Events

Table 15.4.5-1 lists the typical sequence of events.

15.4.5.2.2 Systems Operation

The analysis of this transient assumes and takes credit for normal functioning of plant instrumentation and controls and the reactor protection system. Operation of engineered safeguards is not expected.

15.4.5.3 Core and System Performance

15.4.5.3.1 Mathematical Model

Only a qualitative evaluation is provided.

15.4.5.3.2 Input Parameters and Initial Conditions

In each of these transient events, the most severe transient results when initial conditions are established for operation at the low end of the rated flow control rod line.

Maximum change in speed control occurs with failure of one of the MG set speed controllers. A rapid swing of the coupler is simulated at its maximum rate of 25 percent/sec.

15.4.5.3.3 Qualitative Results

Even with the worst recirculation flow control failure, the changes in nuclear system pressure are not significant with regard to overpressure. Pressure decreases over most of the transient. The rapid increase in core coolant flow causes an increase in neutron flux, which initiates a reactor APRM high flux scram. The MCPR remains above the safety limit and no radioactive material is released from the fuel. This is not a limiting event.

15.4.5.3.4 Consideration of Uncertainties

Some uncertainties in void reactivity characteristics, scram time, and worth are expected to have less serious outcomes than those simulated here.

15.4.5.4 Barrier Performance

This transient results in a very slight increase in reactor vessel pressure and therefore represents no threat to the reactor coolant pressure boundary (RCPB).

15.4.5.5 Radiological Consequences

An evaluation of the radiological consequences is not required for this event, since no radioactive material is released from the fuel.

TABLE 15.4.5-1 TYPICAL SEQUENCE OF EVENTS FOR RECIRCULATION FLOW CONTROLLER FAILURE WITH INCREASING FLOW

Approximate Elapsed Time (sec)	Event
0	Simulate failure of single loop control.
1.5	Reactor high flux scram trip is initiated.
5	Turbine control valves start to close upon falling turbine pressure.
14	Turbine control valves fully close. Turbine pressure is below pressure regulator setpoints.

TABLE 15.4.5-1 TYPICAL SEQUENCE OF EVENTS FOR RECIRCULATION FLOW CONTROLLER FAILURE WITH INCREASING FLOW

Approximate Elapsed Time (sec)	Event
55	Vessel water level reaches Level 8 (L8) setpoint.
55	Feedwater pumps are tripped off.
>100	Core inlet flow and vessel pressure settle at a new steady state.

15.4.7 Misplaced Bundle Accident

15.4.7.1 Identification of Causes and Frequency Classification

15.4.7.1.1 Identification of Causes

The event discussed in this section is the improper loading of a fuel bundle and subsequent operation of the core. Analysis is performed for the initial core, and reload cores, where the resultant CPR response may establish the operating limit MCPR.

Three errors must occur for this event to take place in the initial core loading. First, a bundle must be misloaded into a wrong location in the core. Second, the bundle that was supposed to be loaded where the mislocation occurred also has to be put in an incorrect location. Third, the two misplaced bundles have to be overlooked during the core verification process performed following initial core loading. For reload cores, only two errors must occur.

15.4.7.1.2 Frequency of Occurrence

This unlikely event occurs when a fuel bundle is loaded into the wrong location in the core. It is assumed that the bundle is misplaced to the worst possible location and that the plant is operated with the mislocated bundle. This event is categorized as an infrequent incident on the basis of the following data: expected frequency is 0.004 events per operating cycle.

The above number is based upon past experience. The only misloading events that have occurred in the past were in reload cycles where only two errors are necessary. Therefore, the frequency of occurrence for initial cores is even lower, since three errors must occur concurrently. There has never been a loading error in an initial core.

15.4.7.2 Sequence of Events and Systems Operation

15.4.7.2.1 Sequence of Events

The postulated sequence of events for the misplaced bundle accident is presented in Table 15.4.7-1.

15.4.7.2.2 Systems Operation

A fuel loading error, undetected by in-core instrumentation following fueling operations, may result in an undetected reduction in thermal margin during power operations. For the analysis reported here, no credit for detection is taken; therefore, no corrective operator action or automatic protection system functioning occurs.

15.4.7.2.3 Effect of Single Failure and Operator Errors

This analysis already represents the worst case (i.e., operation of a misplaced bundle with three single operator errors [SOEs]).

15.4.7.3 Core and System Performance

15.4.7.3.1 Mathematical Model

A three-dimensional BWR simulator model would be used to calculate the core performance resulting from this event. The misplaced bundle accident is a steady-state event, and the BWR simulator easily models this situation. This model is described in detail in Reference 3.

15.4.7.3.2 Input Parameters and Initial Conditions

15.4.7.3.2.1 Initial Core

The initial core consists of three bundle types with average enrichments that are high, medium, or low, with correspondingly different gadolinia concentrations. The fuel bundle loading error involves interchanging a bundle of one enrichment with another bundle of a different enrichment. The following fuel loading errors can be conceived for an initial core:

a. A high enriched bundle is misloaded into a low enriched bundle location

b. A medium enriched bundle is misloaded into a low enriched bundle location

c. A low enriched bundle is misloaded into a high enriched bundle location

d. A low enriched bundle is misloaded into a medium enriched bundle location

e. A medium enriched bundle is misloaded into a high enriched bundle location

f. A high enriched bundle is misloaded into a medium enriched bundle location.

Since all low enriched bundles are located on the core periphery, the two possible fuel loading errors consisting of the misloading of high or medium enriched bundles into a low enriched bundle location (i.e., types 1 and 2) are not significant. In these cases, the higher reactivity bundles are moved to a region of lower importance, resulting in an overall improvement in performance.

The third type of fuel loading error, as identified above, results in the largest enrichment mismatch. However, it does not result in an unacceptable operating consequence. Consider a fuel bundle loading error at beginning of cycle (BOC) with the low enriched bundle (which should be loaded at the periphery) interchanged with a high enriched bundle located adjacent to a local power range monitor (LPRM) and predicted to have the highest LHGR and/or

lowest CPR in the core. After the loading error has occurred and has gone undetected, it is assumed, for purposes of conservatism, that the operator uses a control pattern that places the limiting bundle in the four bundle array containing the misplaced bundle on thermal limits as recorded by the LPRM. As a result of loading the low enriched bundle in an improper location, the average power in the four bundles decreases. Normally, the reading of the LPRM will show a decrease in thermal flux due to the decreased power; however, in this case, an increase in the thermal flux occurs due to decreased neutron absorption in the low enriched bundle. The effects of the softer neutron spectrum due to the decreased thermal absorption are larger than the power depression effect of the lower fission rate, resulting in a net increase in instrument reading. Thus, a fuel loading error of this kind does not result in undetected reductions in thermal margins during power operations.

The fourth and fifth types of fuel loading errors are of the same kind (lower enrichment into higher enrichment) as the third type, and also do not result in a nonconservative operating error.

The fuel bundle loading error with greatest impact on thermal margin is of the sixth type, which occurs when a high enriched bundle is interchanged with a medium enriched bundle located away from an LPRM. Since the medium and high enrichment bundles have a corresponding medium and high gadolinia content, the maximum reactivity difference occurs at end of cycle (EOC), where the gadolinia is burned out. After the loading errors are made and have gone undetected, the operator assumes that the mislocated bundle is operating at the same power as the instrumented bundle in the mirror image location and operates the plant until EOC. For the purpose of conservatism, it is assumed that the mirror image bundle is on thermal limits as recorded by the LPRM. As a result of placing the instrumented bundle on limits, the mislocated bundle violates the Technical Specifications operating MCPR limit.

A misoriented bundle loading error, i.e., rotated 180°, is of no consequence for C-lattice BWR plants. The C-lattice configuration has equal size gaps on all four sides of the bundle; thus rotation will have no effect on the maximum R-factor. Similar to the D-lattice, the bundle in a C-lattice configuration will tilt axially due to the channel buttons at the top of the level assembly. Contrary to the D-lattice, where the tilting tends to mitigate the effect of a rotation, the R-factor increases slightly for the C-lattice. The net effect for the C-lattice is a CPR of less than 0.05.

15.4.7.3.2.2 Reload Cores

For reload cores, the loading error involves the mislocation of at least two fuel bundles. One location is loaded with a bundle which would potentially operate at a lower critical power than it would otherwise. The other location would operate at a higher critical power. The low critical power location could have less margin to boiling transition than other bundles in the core; therefore, the MCPR operating limit is set to protect against this occurrence.

15.4.7.3.3 Qualitative Results

No violation of fuel limits occurs as a result of this event.

15.4.7.3.4 Consideration of Uncertainties

In order to account for any uncertainties, major input parameters of the bounding analysis are taken as the worst case, that is, (a) the bundle is placed in a location with the highest LHGR and/or the lowest CPR in the core, and (b) the bundle is assumed to be operating on thermal limits. These conservative assumptions ensure that the MCPR and the MLHGR are conservatively bounded for the error.

15.4.7.4 Barrier Performance

An evaluation of the barrier performance was not made for this event, since it is a very mild and highly localized event. No perceptible change in the core pressure would be observed.

15.4.7.5 Radiological Consequences

An evaluation of the radiological consequences is not required for this event, since no radioactive material is released from the fuel.

TABLE 15.4.7-1 TYPICAL SEQUENCE OF EVENTS FOR THE MISPLACED BUNDLE ACCIDENT

1. During the core loading operation, a bundle is loaded into the wrong core location.

2. Subsequently, the bundle designated for this location is incorrectly loaded into the location of the previous bundle.

3. During core verification procedure, the two errors are not observed.

4. The plant is brought to full power operation without detecting the misplaced bundle.

5. The plant continues to operate throughout the cycle.

15.4.9 Control Rod Drop Accident

15.4.9.1 Identification of Causes and Frequency Classification

15.4.9.1.1 Identification of Causes

The control rod drop accident (CRDA) is the result of a postulated event in which a high worth control rod is inserted out-of-sequence into the core. Subsequently, it becomes decoupled from its drive mechanism. The mechanism is withdrawn, but the decoupled control rod is assumed to be stuck in place. At a later optimum moment, the control rod suddenly falls free and drops out of the core. This action results in the removal of large negative reactivity from the core, which in turn results in a localized power excursion.

A more detailed discussion is given in Reference 7 and 8.

15.4.9.1.2 Frequency Classification

The CRDA is categorized as a limiting fault because it is not expected to occur during the lifetime of the plant; if postulated to occur, however, it has consequences that include potential for the release of radioactive material from the fuel.

15.4.9.2 Sequence of Events and Systems Operation

15.4.9.2.1 Sequence of Events

Before the CRDA is possible, the first part of the sequence of events presented in Table 15.4.9-1 must occur.

To limit the worth of the rod that would be dropped in a BPWS operating mode, the RWM is used below the low power setpoint to enforce the banked position withdrawal sequence (BPWS). The RWM is programmed to follow the BPWS, which are generically defined in Reference 2. For BPWS, the effective withdrawal is in the form of (stepped) defined bank patterns.

15.4.9.2.2 System Operation

The unlikely set of circumstances described above makes possible the rapid removal of a control rod. The dropping of the rod results in high reactivity in a small region of the core. For large, loosely coupled cores, this action should result in a highly peaked power distribution and subsequent operation of shutdown mechanisms. Significant shifts in the spatial power distribution would occur during the course of the excursion.

The rod worth minimizer (RWM) limits the worth of any control rod that could be dropped by regulating the withdrawal sequence. This system prevents the movement of an out-of-sequence rod in the 100 percent control rod density to the preset low power level, the RWM will allow only BPWS mode withdrawals or insertions.

The RWM or second operator check off system is assumed to operate throughout the event. The second operator check off system provides similar protection as the RWM if the RWM was not functioning and the second operator check off system conducted.

This excursion is terminated by automatic safety features of inherent shutdown mechanisms. Therefore, no operator action during the excursion is required. Although other normal plant instrumentation and controls are assumed to function, no credit is taken for their operation in the analysis of this event.

15.4.9.3 Core and System Performance

15.4.9.3.1 Mathematical Model

Techniques and models used to analyze the control rod drop accident (CRDA) are documented in References 1, 7, 8, and 9. The information in these documents has been used for the development of design approaches to make the consequences of CRDA acceptable.

The rod worth and scram worth are determined by using the BWR simulator model described in Chapter 4, Subsection 4.3. The Doppler coefficient is calculated by using the methods described in References 1, 2, and 7.

15.4.9.3.2 Input Parameters and Initial Conditions

The core at the time of the CRDA is assumed to be at the point in cycle that results in the highest control rod worth, to contain no xenon, to be in a hot startup condition, and to have the control rods positioned such that the highest incremental control rod worth encountered occurs next. The removal of xenon, which competes well for neutron absorptions, increases the fractional absorptions, or worth, of the control rods.

15.4.9.3.3 Qualitative Results

Adherence to BPWS reduces control rod worth such that the postulated control rod drop accident is well under the design criterion of 280 cal/gm. Reference 10 provides a statistical evaluation of BPWS control rod accident analyses. The results show that, in all cases, the peak fuel enthalpy in a CRDA would be much less than the 280 cal/gm design limit even with a maximum incremental rod worth corresponding to 95 percent probability at the 95 percent confidence level. Based on these results, it was proposed to the NRC, and subsequently found acceptable, to delete the CRDA from the standard GE BWR reload package for the BPWS plants (References 2 and 11).

15.4.9.4 Barrier Performance

An evaluation for the barrier performance was not made for this accident, since this is a highly localized event with no significant change in the gross core temperature or pressure.

15.4.9.5 Radiological Consequences

The design basis analysis is based on the NRC Standard Review Plan 15.4.9 (Reference 12). The specific models, assumptions, and program used for computer evaluation are described in Reference 13. Specific parametric values used in the evaluation are presented in Table 15.4.9-2.

15.4.9.5.1 Fission Product Release From Fuel

The failure of 850 fuel rods is used for the initial analysis and is based on an 8x8 fuel design. The mass fraction of the fuel in the damaged rods that reaches or exceeds the initiation temperature of fuel melting (taken at 2804°F) is estimated to be 0.0077.

Fuel reaching melt conditions is assumed to release 100 percent of the noble gas inventory and 50 percent of the iodine inventory. The remaining fuel in the damaged rods is assumed to release 10 percent of both the noble gas and iodine inventories.

A maximum equilibrium inventory of fission products in the core is based on 1000 days of continuous operation at 3499 MWt. No delay time is considered between departure from the above power condition and initiation of the accident.

For advanced fuel designs such as GE11 or GE13 (both 9x9 fuel designs) a generic reanalysis has been performed by General Electric Company (Reference 16). It was

conservatively determined that the 8x8 fuel designs would see failure of 850 fuel rods when they reached a fuel enthalpy of 170 cal/gm. The enthalpy of 170 cal/gm is the enthalpy limit for eventual fuel cladding perforation. For the GE11 fuel designs, approximately 1000 fuel rods would reach 170 cal/gm and for GE14, approximately 1200 fuel rods would reach 170 cal/gm. However, the radiological consequences for these designs are bounded by the 8x8 fuel designs due to the lower plenum activity.

For the purposes of this evaluation, it is conservatively assumed that the fractional plenum activity for any 9x9 fuel rod will be 60/74 or 0.81 times the activity in an 8x8 fuel rod. Based on the assumption that 1000 9x9 fuel rods fail compared to 850 8x8 fuel rods, the relative amount of activity released for an 9x9 fuel is (1000/850) x 0.81 = 0.95 times the activity released for the 8x8 core. Similarly, it is conservatively assumed that the fractional plenum activity for any 10x10 fuel rod will be 60/87.33 or 0.68 times the activity in an 8x8 fuel rod. Based on the assumption that 1200 10x10 fuel rods fail compared to 850 8x8 fuel rods, the relative amount of activity released for a 10x10 fuel is (1200/850) x 0.68 = 0.96 times the activity released for the 8x8 core. The activity released to the environment and the radiological exposures of all GE 9x9 and 10x10 fuel designs will therefore be less than 95 percent and 96 percent of those values presented in Table 15.4.9-4 and Table 15.9.4-5, respectively.

15.4.9.5.2 Fission Product Transport to the Environment

The transport pathway consists of carryover with steam to the turbine condenser prior to MSIV closure and leakage from the condenser to the environment. No credit is taken for the turbine building.

Of the activity released from the fuel, 100 percent of the noble gases and 10 percent of the iodines are assumed to be carried to the condenser before MSIV closure is complete.

Of the activity reaching the condenser, 100 percent of the noble gases and 10 percent of the iodines (due to partitioning and plateout) remain airborne. The activity airborne in the condenser is assumed to leak directly to the environment at a rate of 1.0 percent per day. Radioactive decay is accounted for during residence in the condenser; it is neglected, however, after release to the environment.

The activity airborne in the condenser is presented in Table 15.4.9-3. The cumulative release of activity to the environment is presented in Table 15.4.9-4.

15.4.9.5.3 Results

The calculated exposures from the design basis analysis are presented in Table 15.4.9-5 and are well within the guidelines of 10 CFR 100.

15.4.9.5.4 Evaluation of the Impact of Hydrogen Water Chemistry

The operation with HWC will increase radiation doses in the main steam lines due to carryover of Nitrogen N-16. For a 4 ppm final feedwater dissolved hydrogen concentration, the background radiation levels in the main steam lines may increase by a factor of up to eight (8). Therefore, the main steam line radiation monitors (MSLRM) will see an increase in the normal operating radiation levels while the reactor is at power. The MSLRMs have a high radiation trip signal set at less than or equal to three times the operating background to

provide an early detection of gross release of fission products from fuel failures. Fermi 2 takes credit for an MSLRM initiated isolation in the event of a control rod drop accident (CRDA). The MSLRM set point is specified in the Fermi 2 Technical Specification as three times "full power background".

As part of the HWC implementation at Fermi 2, it has been decided to keep the MSLRM scram and main steam line isolation set point at three times the "full power background" as stated in the Technical Specification. However, the redefined "full power background" will include the effects of hydrogen injection. By redefining the "full power background" to include the effects of hydrogen injection, the MSLRM set point will have to be adjusted due to an increase in the "full power background" radiation levels. An increase in the "full power background" radiation level by a factor of up to eight (8) may thus require an MSLRM set point adjustment. However, by redefining the "full power background" to include the effects of hydrogen injection, the wording in the Technical Specification need not be changed.

The MSLRMs provide a trip signal which initiates a reactor scram and closes the main steam line isolation valves (MSIV), when elevated radiation levels are detected in the main steam lines. However, the only accident which takes credit for the MSLRM trip signal is the Control Rod Drop Accident (CRDA). During this accident, the primary function of the MSLRM trip signal is to limit the transport of the fission product radioactivity released from the fuel to the turbine and condenser, by initiating automatic closure of the MSIVs and thus isolating the reactor vessel. High radiation levels in the main steam lines will also provide a reactor scram signal. However, during CRDA the scram signal would also be initiated by the neutron monitoring system.

The evaluation of the proposed MSLRMs set point adjustment (to account for background radiation change due to the HWC) from three times the "full power background" <u>without the HWC</u> to three times the "full power background" <u>with HWC</u> performed by GENE (ref. 15) has concluded that such a change will not affect the radiological consequences of the CRDA, which are given in Table 15.4.9-5. GENE's evaluation of the design basis accident indicates that the adjusted MSLRM setpoint for HWC is still a fraction of the dose rate expected as a result of CRDA. Thus though the adjusted setpoint due to HWC may be higher by a factor of up to eight, a CRDA would still be detected by the MSLRMs, whether HWC is operating or not. Therefore on the basis of this evaluation, it is concluded that plant operation with or without hydrogen injection is justified for a MSLRM setpoint of up to 30 R/hr.

15.4.9.5.5 <u>Evaluation of Impact of On-Line Noble Chem™ and Hydrogen Water Chemistry</u>

On-Line Noble Chem™ (OLNC) injects a noble metal compound into reactor feedwater. This provides a catalytic environment that promotes the recombining of hydrogen and oxygen in the reactor coolant in the reactor and recirculation piping. OLNC works in conjunction with Hydrogen Water Chemistry (HWC) for controlling intergranular stress corrosion cracking (IGSCC). The catalytic nature of the OLNC process allows the use of lower hydrogen injection rates when compared to HWC alone. The lower hydrogen injection rates will result in lower amounts of N-16 being carried over into the main steam lines lowering the "full power background" radiation dose in the vicinity of the lines.

The scram and main steam line isolation functions of the main steam line radiation monitors (MSLRM) are specified in the Fermi 2 Technical Specifications. The Technical

Requirements Manual specifies the setpoint as three times “full power background”. The definition of “full power background” at the time of HWC implementation included the effects of hydrogen injection. As hydrogen will continue to be injected, that definition remains valid.

As part of OLNC implementation the MSLRM setpoints are adjusted to reflect the full power background radiation at the new hydrogen injection rates. Reference 15 concludes that plant operation is justified for a MSLRM setpoint of up to 30 R/hr. As the setpoints for OLNC with lower hydrogen injection rates will be lower than the setpoints for HWC alone, the evaluation in Reference 15 bounds the conditions for OLNC with lower hydrogen injection rates.

15.4 REACTIVITY AND POWER DISTRIBUTION ANOMALIES

REFERENCES

1. R. C. Stirn and J. F. Klapproth, Continuous Control Rod Withdrawal Transient in the Startup Range, NEDO-23842, April 18, 1978 (originally docketed for Hatch 2).
2. C. J. Paone, Banked Position Withdrawal Sequence, NEDO-21231, January 1977.
3. General Electric Co., "General Electric Standard Application for Reactor Fuel, GESTAR II," NEDE-24011-P-A, (Latest Approved Revision as identified in the COLR).
4. Letter from the USNRC to Detroit Edison, "Amendment No. 87 to Facility Operating License No. NPF-43 (TAC No. M82102)," September 9, 1992.
5. Deleted
6. General Electric Co., "Maximum Extended Operating Domain Analysis for Detroit Edison Company Enrico Fermi Energy Center Unit 2," NEDC-31843P, July 1990.
7. R. C. Stirn et al., Rod Drop Accident Analysis for Large BWRs, NEDO-10527, March 1976.
8. R. C. Stirn, C. J. Paone, and J. M. Haun, Rod Drop Accident Analysis for Large Boiling Water Reactors, Addendum No. 2, Exposed Cores, NEDO-10527 Supplement 2, January 1973.
9. Letter, J. S. Charnley (GE) to C. O. Thomas (NRC), Licensing Credit for Banked Position Withdrawal Sequences on Group Notch Plants, May 10, 1985.
10. Letter, R. E. Engel (GE) to D. M. Vassallo (NRC), Elimination of Control Rod Drop Accident Analysis for Banked Position Withdrawal Sequence Plants, February 24, 1982.
11. Letter, C. O. Thomas (NRC) to J. S. Charnley (GE), "Acceptance of Referencing of Licensing Topical Report NEDE-24011-P-A, Revision 6, Amendment 12," October 11, 1985.
12. U.S. Nuclear Regulatory Commission, Standard Review Plan, NUREG-75/037, November 24, 1975.
13. General Electric Company, GE BWR Generic Reload Application for 8 x 8 Fuel, NEDO-20360 Supplement 3 to Revision 1.
14. Deleted.
15. GENE memo “Fermi 2 Main Steam Line Radiation Monitor Set Point Modification”, April 7, 1995, DRF A 42-0014.
16. General Electric Fuel Bundle Designs, NEDE-31152P, Revision 8.
17. NEDC-32868P, Revision 1, "GE14 Compliance With Amendment 22 of NEDE-24011-P-A (GESTAR-II)", September 2000.
18. CLETTR DRF A00 04111, Accident Radiological Consequences for Fermi 2 Power Uprate, July 12, 1991.

TABLE 15.4.9-1 TYPICAL SEQUENCE OF EVENTS FOR CONTROL ROD DROP ACCIDENT

Approximate Elapsed Time (sec)	Event
-	Reactor is at a control rod pattern corresponding to maximum increment rod worth.
-	The Rod Worth Minimizer or operators are functioning within constraints of banked position withdrawal sequence (BPWS). The control rod that will result in the maximum incremental reactivity worth addition at any time in core life under any operating condition while employing the BPWS becomes decoupled from the control rod drive.
-	Operator selects and withdrawals the drive of the decoupled rod along with the other required control rods assigned to the banked-position group such that the proper core geometry for the maximum incremental rod worth exists.
-	Decoupled control rod sticks in the fully inserted position.
0	Control rod becomes unstuck and drops at the maximum velocity determined from experimental data (3.11 fps).
< 1 sec	Reactor goes on a positive period and initial power burst is terminated by the Doppler reactivity feedback.
-	The average power range monitor system (APRM) 120% power signal scrams reactor (conservative; in startup mode APRM scram would be operative + intermediate range monitor).
< 5 sec	Scram terminates accident.

TABLE 15.4.9-2 CONTROL ROD DROP ACCIDENT: EVALUATION PARAMETERS[a]

Reactor Power (MWt)	3499
Number of Failed Fuel Rods	850
Number of Fuel Rods per Bundle	60
Fuel Rod Plenum Activity Fractions (%)	
Noble gases	10
Iodines	10
Fraction of Fuel in Failed Rods Assumed to Melt (%)	0.77
Fraction of Inventory Released from Melted Fuel (%)	
Noble gases	100
Iodines	50
Fraction of Released Activity Transported to Condenser (%)	
Noble gases	100
Iodines	10
Decay Prior to Release	NO
Radial Power Peaking Factor	1.5
Fraction of Iodine Washed Out in Condenser (%)	90
Leak Rate from Condenser (%/day)	1
Holdup in Turbine Building	NO
Release Height (m)	0
χ/Q at EA Boundary (sec/m^3)	
0-2 hours	1.23E-4
χ/Q at LPZ (sec/m^3)	
0-8 hours	9.83E-6
8-24 hours	1.59E-6
24-96 hours	1.18E-6
96-720 hours	5.92E-7

[a] See Reference 18

TABLE 15.4.9-3 CONTROL ROD DROP ACCIDENT: ACTIVITY AIRBORNE IN CONDENSER (CURIES)

ISOTOPE	1-MIN	10-MIN	1-HOUR	2-HOUR	4-HOUR	8-HOUR	12-HOUR	1-DAY	4-DAY	30-DAY
I-131	2.64E 03	2.64E 03	2.63E 03	2.62E 03	2.60E 03	2.56E 03	2.52E 03	2.40E 03	1.80E 03	1.47E 02
I-132	3.84E 03	3.67E 03	2.85E 03	2.11E 03	1.15E 03	3.45E 02	1.03E 02	2.76E 00	1.01E-09	1.00E-20
I-133	5.52E 03	5.49E 03	5.34E 03	5.16E 03	4.82E 03	4.21E 03	3.68E 03	2.46E 03	2.16E 02	1.55E-07
I-134	6.00E 03	5.33E 03	2.76E 03	1.25E 03	2.57E 02	1.09E 01	4.59E-01	3.46E-05	1.00E-20	1.00E-20
I-135	5.20E 03	5.12E 03	4.69E 03	4.22E 03	3.42E 03	2.25E 03	1.47E 03	4.17E 02	2.13E-01	1.00E-20
TOTAL I	2.32E 04	2.22E 04	1.83E 04	1.54E 04	1.23E 04	9.37E 03	7.78E 03	5.27E 03	2.01E 03	1.47E 02
KR-83M	3.24E 04	3.06E 04	2.23E 04	1.53E 04	7.16E 03	1.57E 03	3.45E 02	3.65E 00	5.09E-12	1.00E-20
KR-85M	6.99E 04	6.83E 04	6.00E 04	5.14E 04	3.77E 04	2.03E 04	1.09E 04	1.69E 03	2.38E-02	1.00E-20
KR-85	3.14E 03	3.14E 03	3.14E 03	3.13E 03	3.13E 03	3.13E 03	3.12E 03	3.10E 03	3.01E 03	2.31E 03
KR-87	1.33E 05	1.23E 05	7.79E 04	4.52E 04	1.52E 04	1.71E 03	1.93E 02	2.77E-01	1.00E-20	1.00E-20
KR-88	1.90E 05	1.83E 05	1.49E 05	1.17E 05	7.16E 04	2.69E 04	1.01E 04	5.39E 02	1.22E-05	1.00E-20
KR-89	1.90E 05	2.66E 04	4.75E-01	9.54E-07	1.00E-20	1.00E-20	1.00E-20	1.00E-20	1.00E 20	1.00E-20
XE-131M	1.65E 03	1.65E 03	1.64E 03	1.64E 03	1.63E 03	1.61E 03	1.59E 03	1.54E 03	1.25E 03	2.12E 02
XE-133M	2.40E 04	2.39E 04	2.37E 04	2.33E 04	2.27E 04	2.15E 04	2.04E 04	1.73E 04	6.49E 03	1.32E 00
XE-133	5.75E 05	5.75E 05	5.72E 05	5.68E 05	5.62E 05	5.48E 05	5.36E 05	4.99E 05	3.26E 05	8.08E 03
XE-135M	1.04E 05	6.96E 04	7.60E 03	5.33E 02	2.62E 00	6.32E-05	1.52E-09	1.00E-20	1.00E-20	1.00E-20
XE-135	7.43E 04	7.34E 04	6.89E 04	6.38E 04	5.47E 04	4.02E 04	2.96E 04	1.18E 04	4.70E 01	1.00E-20
XE-137	4.21E 05	8.26E 04	9.72E 00	1.87E-04	6.93E-14	1.00E-20	1.00E-20	1.00E-20	1.00E-20	1.00E-20
XE-138	4.57E 05	2.94E 05	2.55E 04	1.35E 03	3.81E 00	3.03E-05	2.41E-10	1.00E-20	1.00E-20	1.00E-20
TOTAL NG	2.28E 06	1.55E 06	1.01E 06	8.91E 05	7.75E 05	6.65E 05	5.12E 05	5.35E 05	3.36E 05	1.06E 04

TABLE 15.4.9-4 CONTROL ROD DROP ACCIDENT: ACTIVITY RELEASED TO THE ENVIRONMENT (CURIES)

ISOTOPE	1-MIN	10-MIN	1-HOUR	2-HOUR	4-HOUR	8-HOUR	12-HOUR	1-DAY	4-DAY	30-DAY
I-131	1.83E-02	1.83E-01	1.10E 00	2.19E 00	4.36E 00	8.66E 00	1.29E 01	2.52E 01	8.77E 01	2.59E 02
I-132	2.67E-02	2.61E-01	1.39E 00	2.41E 00	3.73E 00	4.85E 00	5.18E 00	5.32E 00	5.33E 00	5.33E 00
I-133	3.83E-02	3.82E-01	2.26E 00	4.45E 00	8.61E 00	1.61E 01	2.27E 01	3.78E 01	6.55E 01	6.82E 01
I-134	4.19E-02	3.95E-01	1.75E 00	2.54E 00	3.07E 00	3.20E 00	3.20E 00	3.20E 00	3.20E 00	3.20E 00
I-135	3.62E-02	3.59E-01	2.06E 00	3.92E 00	7.09E 00	1.17E 01	1.48E 01	1.90E 01	2.06E 01	2.06E 01
TOTAL I	1.61E-01	1.58E 00	8.56E 00	1.55E 01	2.69E 01	4.46E 01	5.88E 01	9.05E 01	1.82E 02	3.56E 02
KR-83M	2.26E-01	2.20E 00	1.13E 01	1.91E 01	2.80E 01	3.41E 01	3.55E 01	3.59E 01	3.59E 01	3.59E 01
KR-85M	4.86E-01	4.80E 00	2.70E 01	5.02E 01	8.70E 01	1.34E 02	1.59E 02	1.84E 02	1.88E 02	1.88E 02
KR-85	2.18E-02	2.18E-01	1.31E 00	2.61E 00	5.22E 00	1.04E 01	1.56E 01	3.12E 01	1.23E 02	8.11E 02
KR-87	9.29E-01	8.92E 00	4.32E 01	6.82E 01	9.11E 01	1.01E 02	1.03E 02	1.03E 02	1.03E 02	1.03E 02
KR-88	1.32E 00	1.30E 01	7.04E 01	1.25E 02	2.02E 02	2.79E 02	3.07E 02	3.24E 02	3.24E 02	3.24E 02
KR-89	1.48E 00	6.68E 00	7.52E 00	7.52E 00	7.52E 00	7.52E 00	7.52E 00	7.52E 00	7.52E 00	7.52E 00
XE-131M	1.14E-02	1.14E-01	6.85E-01	1.37E 00	2.73E 00	5.42E 00	8.09E 00	1.59E 01	5.76E 01	2.10E 02
XE-133M	1.67E-01	1.66E 00	9.92E 00	1.97E 01	3.89E 01	7.57E 01	1.11E 02	2.05E 02	5.35E 02	7.34E 02
XE-133	3.99E 00	3.99E 01	2.39E 02	4.76E 02	9.47E 02	1.87E 03	2.78E 03	5.36E 03	1.75E 04	3.99E 04
XE-135M	7.36E-01	6.08E 00	1.58E 01	1.69E 01	1.70E 01	1.70E 01	1.70E 01	1.70E 01	1.70E 01	1.70E 01
XE-135	5.16E-01	5.13E 00	2.98E 01	5.75E 01	1.07E 02	1.85E 02	2.43E 02	3.40E 02	4.04E 02	4.04E 02
XE-137	3.21E 00	1.62E 01	1.94E 01	1.94E 01	1.94E 01	1.94E 01	1.94E 01	1.94E 01	1.94E 01	1.94E 01
XE-138	3.25E 00	2.63E 01	6.45E 01	6.79E 01	6.81E 01	6.81E 01	6.81E 01	6.81E 01	6.81E 01	6.81E 01
TOTAL NG	1.63E 01	1.31E 02	5.40E 02	9.32E 02	1.62E 03	2.81E 03	3.87E 03	6.71E 03	1.94E 04	4.28E 04

TABLE 15.4.9-5 CONTROL ROD DROP ACCIDENT: RADIOLOGICAL EFFECTS[b]

	Whole-Body Dose (rem)	Thyroid Inhalation Dose (rem)
Exclusion Area (915 m)	1.5(-2)[a]	2.0(-1)
Low-population zone (4827 m)	2.8(-3)	1.3(-1)

[a] 1.5(-2) = 1.5×10^{-2}.
[b] See Reference 18

15.5 INCREASE IN REACTOR COOLANT INVENTORY

Only one transient was evaluated under the increase in reactor coolant inventory analytical category. However, this event may not always be analyzed on a cycle-specific basis, since it is normally bounded by the loss of feedwater heater event.

15.5.1 Inadvertent High Pressure Coolant Injection Startup

The inadvertent high pressure coolant injection (HPCI) activation or startup transient behaves similarly to the loss of feedwater heating event (Subsection 15.1.1). The high pressure coolant injection pumps are inadvertently started and the cold water injection results in an increase in inlet subcooling (or decrease in temperature) and a consequent increase in power.

15.5.1.1 Identification of Causes and Frequency Classification

15.5.1.1.1 Identification of Causes

Manual startup of the high pressure coolant injection (HPCI) system is postulated for this analysis; i.e., operator error is postulated.

15.5.1.1.2 Frequency Classification

This transient disturbance is categorized as an incident of moderate frequency.

15.5.1.2 Sequence of Events and Systems Operation

15.5.1.2.1 Sequence of Events

Table 15.5.1-1 lists the typical sequence of events. Similar to the loss of feedwater heating transient, this event results in the reactor core receiving colder water through the feedwater sparger. The reactor vessel initially receives an excess of feedwater flow (as during the feedwater controller failure) until the feedwater flow is reduced by the water level controls. The subcooling of the feedwater along with the excess flow result in an increase in core inlet subcooling which is usually less than that produced by the LFWH event. The increase in core inlet subcooling collapses the void content in the core, thus increasing the core average power due to the negative void coefficient. The increased subcooling also produces a power distribution change, shifting the axial distribution towards the bottom of the core. Because of this axial shift, voids begin to build up at the bottom again which acts as a negative feedback to the void collapsing process. Additional negative reactivity (doppler feedback) is applied when the fuel temperature increases. This feedback moderates the core power increase. This event also tends to flatten the radial power distribution.

The HPCI event is a relatively slow event. The reactor core power is essentially in steady state throughout the transient. The core power typically reaches its maximum value during the first half minute of the transient. This is attributable to the core inlet subcooling transient brought about by the excess feedwater flow.

15.5.1.2.2 Systems Operation

To properly simulate the expected sequence of events, the analysis of this incident assumes normal functioning of plant instrumentation and controls, specifically of the pressure regulator and the vessel level control that respond directly to this event.

Required operation of engineered safeguards, apart from what is described, is not expected for this transient event. The system is assumed to be in the manual flow control mode of operation.

15.5.1.3 Core and System Performance

15.5.1.3.1 Mathematical Model

The quasi-steady-state nature of this transient allows analysis using the 3-dimensional, coupled nuclear thermal-hydraulics core simulator model described in Reference 1. This model calculates changes in power level, power distribution, core flow, exposures, reactor thermal-hydraulic characteristics, and critical power ratio with spatially varying voids, control rods, burnable poisons, and other variables under steady-state conditions. For this transient, the time for reactivity insertion is greater than the fuel thermal time constant and core hydraulic-transport times. Therefore, the steady-state representation of the event's initial, final, and peak power state is adequate.

As described in Reference 2, the loss of feedwater heating event is demonstrated to be bounding by comparing the increase in core inlet subcooling due to feedwater temperature reduction from HPCI plus the increase in core inlet subcooling due to the excess feedwater from HPCI to the increase in core inlet subcooling for the LFWH event. If the HPCI increase is less than the LFWH increase, then the LFWH is bounding.

The enthalpy of the high pressure cold water supplied to the vessel, $h_{sparger}$, is determined by performing an energy balance on the feedwater line just downstream of the point of HPCI injection. Based on $h_{sparger}$, the core inlet subcooling due to feedwater temperature reduction from HPCI can be determined from an energy balance on the reactor vessel. The increase in core inlet subcooling due to the excess feedwater from HPCI is determined using the REDY point dynamic transient model described in Reference 1. The core inlet subcooling due to LFWH can be determined from an energy balance on the reactor vessel based on the post-event feedwater enthalpy.

If the HPCI event is not bounded by the loss of feedwater heating event, the cycle specific results are determined using the REDY point dynamic transient model described in Reference 1.

The REDY model is designed to predict associated transient behavior of this reactor. This model has been improved and verified through extensive comparison of its predicted results with actual BWR test data. Some of the significant features of the model are presented below.

a. A point kinetic model is assumed with reactivity feedbacks from control rods (absorption), voids (moderation), and Doppler (capture) effects.

b. The fuel is represented by three four-node cylindrical elements, each enclosed in a cladding node. One of the cylindrical elements is used to represent core average power and fuel temperature conditions, providing the source of Doppler feedback. The other two are used to represent hot spots in the core, and to simulate peak fuel center temperature and cladding temperature.

c. Four primary system pressure nodes are simulated representing the core exit pressure, vessel dome pressure, steam line pressure (at a point representative of the SRV location), and turbine inlet pressure.

d. The active core void fraction is calculated from a relationship among core exit quality, inlet subcooling, and pressure. This relationship is generated from multi-node core steady-state calculations. A second-order void dynamic model, with the void boiling sweep-time calculated as a function of core flow and void conditions, is also utilized.

e. Principal controller functions, such as feedwater flow, recirculation flow, reactor water level, pressure, and load demand, are represented, together with their dominant nonlinear characteristics.

f. The ability to simulate necessary reactor protection system functions is provided.

15.5.1.3.2 Input Parameters and Initial Conditions

The bounding conditions for this analysis are 100 percent power and maximum subcooling. The transient is simulated by programming a change in feedwater enthalpy corresponding to the maximum subcooling condition.

The water temperature of the HPCI system was assumed to be 40°F. Inadvertent startup of the HPCI system provides the greatest auxiliary source of cold water into the vessel. For the inadvertent HPCI startup transient, the lowest HPCI injection temperature of 40°F and a minimum enthalpy of 8 Btu/lb are used. The lower the HPCI injection temperature, the greater the subcooling increase. To inject at a temperature lower than 40°F, the operator would have to fail to use the heater to maintain the condensate tank temperature above 40°F. This would violate procedural requirements the operator is required to follow.

A higher HPCI temperature would still result in a water level considerably below the setpoint of the Level 8 trip and would result in a lower increase in heat flux.

15.5.1.3.3 Qualitative Results

If the cycle-specific analyses are required to be performed, then the results are presented in Table 15.0-2 and documented in the cycle-specific supplemental reload licensing report. Table 15.5.1-1 lists the typical sequence of events.

The simulated transient event begins with the introduction of cold water into the feedwater sparger. Within 5 sec, the full HPCI flow is established at approximately 20 percent of the rated feedwater flow rate. Delays were not considered because they are irrelevant to the analysis.

Addition of cooler water to the core causes the neutron flux to increase. No violation of fuel limits occurs as a result of this event.

15.5.1.3.4 Consideration of Uncertainties

Important analytical factors, such as the feedwater temperature change, have been assumed to be at the worst conditions so that any deviations in the actual plant parameters will produce a less severe transient. Additionally, the HPCI flow rate is assumed to be 10 percent greater than its rated capacity.

15.5.1.4 Barrier Performance

A slight pressure reduction from initial conditions occurs; therefore no further evaluation is required, as reactor coolant pressure boundary (RCPB) margins are maintained.

15.5.1.5 Radiological Consequences

Since no radioactivity is released during this event, a detailed evaluation is not required.

15.5 INCREASE IN REACTOR COOLANT INVENTORY

REFERENCES

1. General Electric Co., "General Electric Standard Application for Reactor Fuel, GESTAR II," NEDE-24011-P-A, (Latest Approved Revision as identified in the COLR).
2. General Electric Co., “Determination of Limiting Cold Water Event,” NEDC-32538-P-A, February 1996.

TABLE 15.5.1-1 TYPICAL SEQUENCE OF EVENTS FOR INADVERTENT HIGH PRESSURE COOLANT INJECTION PUMP START

Estimated Time (sec)	Event
0	The HPCI cold water injection is simulated.
5	Full flow is established for HPCI.

15.6 DECREASE IN REACTOR COOLANT INVENTORY

Four events are evaluated under the decrease in reactor coolant inventory analytical category:

a. Instrument line pipe break

b. Steam system pipe break outside containment

c. Loss of coolant accident inside containment

d. Feedwater line break outside containment

None of these events are analyzed on a cycle-specific basis. A qualitative description of results is provided for those events determined to be nonlimiting from a core performance standpoint.

15.6.2 Instrument Line Pipe Break

There is no specific event or circumstance identified that results in the failure of an instrument line. First, the line is constructed seismically so that it will not fail. Second, if the line did fail, the check valves provided would prevent flow out of the break. However, for the sake of conservatism and for the purpose of evaluating a small line rupture, the failure of an instrument line is assumed to occur between the check valve and the primary containment. This highly unlikely failure is postulated only for the sake of presenting an analysis of the consequences of a small line rupture.

This event involves a postulated small steam line or liquid line pipe break inside or outside primary containment but within a controlled release structure. To bound the event, it is assumed that a small instrument line instantaneously and circumferentially breaks at a location where it may not be possible to isolate it and where immediate detection is not automatic or apparent. This event is far less limiting than the postulated events in Subsections 15.6.4, 15.6.5, and 15.6.6.

This postulated event represents the envelope evaluation for small line failure inside and outside containment, relative to sensitivity to detection.

Though beyond the design basis for Fermi 2, the NRC requested an analysis of an accident scenario that assumed a break of a reactor water level sensing line coincident with a single failure in the remaining instrumentation. The results of such an evaluation concluded that adequate time is available to allow proper mitigating actions to be taken to negate the effects of this scenario.

15.6.2.1 Identification of Causes and Frequency Classification

15.6.2.1.1 Identification of Causes

No specific event or circumstance is identified that results in the failure of an instrument line. These lines are designed to meet high quality engineering standards and strict seismic and environmental requirements. However, for the purpose of evaluating the consequences of a small line rupture, the failure of an instrument line is assumed.

15.6.2.1.2 Event Description

A circumferential rupture of an instrument line that is connected to the primary coolant system is postulated to occur outside the drywell but inside the secondary containment. This failure results in the release of primary system coolant to the secondary containment structure until the reactor is depressurized. This event could conceivably occur also in the drywell. However, the associated effects would not be as significant as those from a failure in the secondary containment.

15.6.2.1.3 Frequency Classification

This event is categorized as a limiting fault.

15.6.2.2 Sequence of Events and Systems Operation

15.6.2.2.1 Sequence of Events

The typical sequence of events for this accident is shown in Table 15.6.2-1.

15.6.2.2.2 Systems Operation

Normal plant instrumentation and controls are assumed to be fully operational during the entire plant transient to ensure positive identification of the break and safe shutdown of the plant. Minimum reactor and plant protection system operations are assumed for the analysis, e.g., minimum emergency core cooling system (ECCS) flow and pool cooling capability. As a consequence of the accident, the reactor is scrammed and the reactor vessel cooled and depressurized over a 5-hr period.

15.6.2.3 Core and System Performance

15.6.2.3.1 Qualitative Summary - Results

Instrument line breaks, because of their small size, are substantially less limiting from a core and system performance standpoint than the events examined in Subsections 15.6.4, 15.6.5, and 15.6.6. Consequently, instrument line breaks are considered to be bounded specifically by the steam line break (Subsection 15.6.4). Details of this calculation, including those pertinent to core and system performance, are discussed in detail in Subsection 15.6.4.

Since instrument line breaks result in a slower rate of coolant loss and are bounded by the calculations referenced above, the results presented here are qualitative rather than quantitative. Since the rate of coolant loss is slow, an orderly reactor system depressurization follows reactor scram, and the primary system is cooled down and maintained without ECCS actuation. No fuel damage or core uncovering occurs as a result of this accident.

15.6.2.3.2 Quantitative Results

Instrument line breaks, because of their small size, are substantially less limiting from a core and system performance standpoint than is the steam line break outside containment. Similarly, instrument line breaks are considered within the spectrum considered in ECCS performance calculations discussed in detail in Subsection 6.3.3. Therefore, all information

concerning ECCS models employed, input parameters, and detailed results for a more limiting (steam line break) event may be found in Section 6.3.

15.6.2.3.3 Consideration of Uncertainties

The approach to conservative analysis of this event is discussed in detail for a more limiting case in Section 6.3.

15.6.2.4 Barrier Performance

15.6.2.4.1 General

The release of primary coolant through the orificed instrument line could result in an increase in secondary containment pressure and the potential of isolation of the normal ventilation system. The following assumptions and conditions are the basis for the mass loss during the 5-hr reactor shutdown period of this event.

a. Shutdown and depressurization are initiated 10 minutes after break occurs

b. Normal depressurization and cooldown of reactor pressure vessel occur

c. Line contains a 1/4-inch diameter flow restricting orifice inside the drywell

d. Moody critical blowdown flow model (Reference 1) is applicable, and flow is critical at the orifice.

The total integrated mass of fluid released into the secondary containment via the break during the blowdown is 25,000 lb. Of this total, 6000 lb flashes to steam. Release of this mass of coolant results in a containment pressure that is well below the design pressure.

15.6.2.4.2 Outside Containment Structure Effects

Refer to Subsection 3.6.2, Pipe Break Outside Containment.

15.6.2.5 Radiological Consequences

While the NRC has developed a standard review plan for this event, a specific regulatory guide calculation method has not been issued to specify unique design-basis assumptions. For this reason, only the realistic bases will be provided.

This analysis is bases on a realistic, but still conservative, assessment of this accident. A circumferential rupture of an instrument line that is connected to the primary coolant system is postulated to occur outside of the drywell. Operator action is assumed to occur at 10 minutes. Therefore, for 10 minutes, primary coolant flows into the reactor building at the maximum rate. At 10 minutes the reactor building is isolated, the standby gas treatment system (SGTS) is initiated, and the reactor is taken through a normal shutdown over a 5.4 hr period. It is assumed that saturated water flows into the instrument line, therein resulting in the maximum iodine release to the reactor building. If the water is subcooled, then there will be less flashing; and if the line connects to partially vaporized coolant, the activity level in the fluid will be less than in the saturated liquid due to steam carryover considerations. During the first 10 minutes prior to operator action, the activity releases from the break are based on coolant iodine concentrations which correspond to the Technical Specification

maximum equilibrium concentration of 0.2 microcuries/gm dose-equivalent ^{131}I. After 10 minutes the coolant is assumed to contain additional iodine activity as a consequence of the release of "spiking activity" from the fuel during depressurization of the vessel. The specific models, assumptions, and program used for computer evaluation are described in Reference 2. Specific values of parameters used in the evaluation are presented in Table 15.6.2-2. The leakage path used in these calculations is shown in Figure 15.6.2-1.

15.6.2.5.1 Fission Product Release From Fuel

The quantity of activity released as a consequence of reactor scram and vessel depressurization is based in part on measurements during plant shutdowns (Reference 2). These measurements have been used to develop an empirical model that predicts, during the depressurization transient, ^{131}I releases of 0.42 Ci/ bundle for a 50 percent probability value to 2.14 Ci/bundle for the 95 percent probability value. For the purpose of this evaluation, the 95th percentile values are used. The release of other iodine isotopes is considered to be inversely proportional to the fission yields. For example, the 95th percentile spike activity for ^{132}I is:

$$^{132}I = \frac{(2.14)\left(F_{\gamma}\ ^{132}I\right)}{F_{\gamma}\ ^{132}I}$$

These releases are assumed to occur from all 764 bundles. It is assumed that when depressurization is initiated at time 10 minutes, 15% of the total available spiking activity is immediately released to the reactor coolant. At any subsequent time, it is assumed that the cumulative fractional release to the coolant of the remaining 85% of spiking activity is equal to the fractional reduction in vessel pressure at that time.

15.6.2.5.2 Fission Product Release to the Environment

Fifty percent of the iodine activity in the coolant which flashes to steam is assumed to be removed by plateout in the reactor building, leaving 50% airborne. The activity airborne in the reactor building is presented in Table 15.6.2-3.

The activity airborne in the reactor building is assumed to be uniformly mixed in the air volume and released unfiltered to the environment through the ventilation system via the roof vent for the first 10 minutes. After initiation of the SGTS (at 10 minutes), flow to the environment is at the rate of 100 percent per day. The integrated isotopic activity released to the environment is presented in Table 15.6.2-4.

15.6.2.5.3 Results

The calculated exposures are presented in Table 15.6.2-5. The results are well below 10 CFR 100 requirements.

15.6.3 DELETED IN PREVIOUS REVISION

15.6.4 Steam System Piping Break Outside Containment

This event involves the postulation of a large steam line pipe break outside primary containment. It is assumed that the largest steam line instantaneously and circumferentially

breaks at a location downstream of the outermost isolation valve. The plant is designed to immediately detect such an occurrence, to initiate isolation of the main steam lines, and to actuate the necessary protective features. This postulated event represents the envelope evaluation of steam line failures outside primary containment.

15.6.4.1 Identification of Causes and Frequency Classification

15.6.4.1.1 Identification of Causes

A main steam line break is postulated without identification of the cause. These lines are designed to high quality engineering codes and standards and to restrictive seismic and environmental requirements. However, for the purpose of evaluating the consequences of a postulated large steam line rupture, the failure of a main steam line is assumed to occur.

15.6.4.1.2 Frequency Classification

This event is categorized as a limiting fault.

15.6.4.2 Sequence of Events and Systems Operation

15.6.4.2.1 Sequence of Events

Accidents that result in the release of radioactive materials directly outside the primary containment are the results of postulated breaches in the reactor coolant pressure boundary or the steam power conversion system boundary. A break spectrum analysis for the complete range of reactor conditions indicates that the limiting fault event for breaks outside the containment is a complete severance of one of the four main steam lines. The sequence of events and approximate times required to reach the event are given in Table 15.6.4-1.

15.6.4.2.2 Systems Operation

A postulated guillotine break of one of the four main steam lines outside the primary containment results in mass loss from both ends of the break. The flow from the upstream side is initially limited by the flow restrictor upstream of the inboard isolation valve. Flow from the downstream side is initially limited by the total area of the flow restrictors in the three unbroken lines. Subsequent closure of the MSIVs further limits the flow when the valve area becomes less than the limiter area and finally terminates the mass loss when the full closure is reached. A discussion of plant and reactor protection system action and ESF action is given in Sections 6.3, 7.2, and 7.3. Figure 15.6.4-1 is a schematic of the steam flow system and the location of the break; and Figure 15.6.4-2 is the leakage path for the steam line break.

15.6.4.3 Core and System Performance

Quantitative results for this event (including mathematical models, input parameters, and consideration of uncertainties) are given in Section 6.3. The temperature and pressure transients that result from this accident are insufficient to cause fuel damage.

15.6.4.3.1 Input Parameters and Initial Conditions

Refer to Section 6.3 for initial conditions.

15.6.4.3.2 Results

There is no fuel damage as a consequence of this accident. Refer to Section 6.3 for ECCS analysis.

15.6.4.3.3 Consideration of Uncertainties

Sections 6.3 and 7.3 contain discussions of the uncertainties associated with the ECCS performance and the containment isolation system, respectively.

15.6.4.4 Barrier Performance

Since this break occurs outside the primary containment, barrier performance within the primary containment envelope is not applicable. Details of the results of this event can be found in Subsection 3.6.2, Pipe Break Outside Containment.

15.6.4.5 Radiological Consequences

The design basis analysis is based on NRC Standard Review Plan 15.6.4 and Regulatory Guide 1.5. The specific models, assumptions, and program used for computer evaluation are described in Reference 3. Specific values of parameters used in the evaluation are presented in Table 15.6.4-2.

15.6.4.5.1 Fission Product Release From Fuel

There is no fuel damage as a result of this accident. The only activity available for release from the break is that present in the reactor coolant and steam lines prior to the break. In accordance with the Standard Review Plan 15.6.4, two cases have been analyzed. For Case 1, the analysis was performed for continued full power operation with a maximum equilibrium coolant concentration of 0.2 μCi/gm dose equivalent I-131. For Case 2, a maximum coolant concentration of 4.0 μCi/gm dose equivalent I-131 is used. This is based on a preaccident iodine spike caused by power changes. It was also conservatively assumed that the offgas release rate (after 30 minutes decay) was 350,000 μCi/sec (as modified by the methodology in Reference 3), and that noble gas activity was discharged into the environment for 10.5 seconds, up to full MSIV closure. The iodine concentration in the reactor coolant is given by (μCi/gm):

	Case 1	Case 2
^{131}I	0.074	1.47
^{132}I	0.67	13.4
^{133}I	0.49	9.89
^{134}I	1.34	26.8
^{135}I	0.73	14.7

Because of its short half-life, N-16 is not considered in the analysis.

15.6.4.5.2 Fission Product Transport to the Environment

The transport pathway is a direct unfiltered release to the environment. The MSIV detection and closure time of 10.5 sec results in a discharge of approximately 112,000 pounds from the break. Assuming that all the activity in this discharge becomes airborne, the release of activity to the environment is presented in Table 15.6.4-3.

15.6.4.5.3 Results

The calculated exposures for the design-basis analysis are presented in Table 15.6.4-4 and are a small fraction of the guidelines of 10 CFR 100.

15.6.5 Loss-of-Coolant Accidents (Resulting From Spectrum of Postulated Piping Breaks Within the Reactor Coolant Pressure Boundary) Inside Containment

This event involves the postulation of a spectrum of piping breaks inside primary containment varying in size, type, and location. The break type includes steam lines and/or liquid process system lines. This event is also coupled with severe natural environmental conditions, including earthquakes.

The event has been analyzed quantitatively in Sections 6.2, 6.3, 7.1, 7.3, 7.6, and 8.3. Therefore, the following discussion provides only new information not presented in the subject sections. All other information is covered by cross referencing.

The postulated event represents the envelope evaluation for liquid or steam line failures inside containment.

15.6.5.1 Identification of Causes and Frequency Classification

15.6.5.1.1 Identification of Causes

There are no realistic, identifiable events that would result in a pipe break inside the containment of the magnitude required to cause a LOCA coincident with a safe shutdown earthquake (SSE) plus single active component failure criteria requirements. The subject piping is designed to meet strict engineering codes and standards criteria, and to withstand severe seismic and environmental conditions. However, since such an accident provides an upper limit estimate to the resultant effects for this category of pipe break, it is evaluated without identification of the causes.

15.6.5.1.2 Frequency Classification

This event is categorized as a limiting fault.

15.6.5.2 Sequence of Events and Systems Operation

15.6.5.2.1 Sequence of Events

Following the pipe break and scram, the low low water level or high drywell pressure signal will initiate the HPCI system at time 0 plus approximately 30 sec. Note that HPCI injection may take as long as 60 sec assuming the maximum analyzed response time; however, this analysis does not depend on HPCI response time. The MSIV will begin closing on the low

low low level signal at time 0 plus approximately 0.5 sec. Additionally, the low low low water level or high drywell pressure signal will initiate the core spray system at time 0 plus approximately 30 sec and the low pressure coolant injection (LPCI) system at time 0 plus approximately 72 sec.

15.6.5.2.2 Systems Operation

Accidents that could result in the release of radioactive fission products directly into the containment are the results of postulated nuclear system, primary coolant pressure boundary pipe breaks. Sections 6.2 and 6.3 examine the possibilities for all pipe break sizes and locations, including the severance of small process system lines, the main steam lines upstream of the flow restrictors, and the recirculation loop pipe lines. The most severe nuclear system effects and the greatest release of radioactive material to the containment result from a complete circumferential break of one of the two recirculation loop pipe lines. In the case where a recirculation pipe breaks, all of the main steam lines are available for iodine deposition and the dose consequences are not maximized. In order to maximize the potential radioactive consequences, a steamline is assumed to break upstream of an inboard MSIV with a degraded ECCS and the maximum release of radioactive material to the containment. This deterministic sequence of events maximizes the dose consequences of a DBA LOCA and is discussed in Section 15.6.5.5. The minimum required functions of any reactor and plant protection system are discussed in Sections 6.2, 6.3, 7.3, 7.6, and 8.3.

15.6.5.3 Core and System Performance

15.6.5.3.1 Mathematical Model

The analytical methods and associated assumptions used in evaluating the consequences of this accident are considered to provide ultraconservative assessment of the expected consequences of this very improbable event. The details of these calculations, their justification, and bases for the models are developed in Sections 6.2, 6.3, 7.3, 7.6, and 8.3.

15.6.5.3.2 Input Parameters and Initial Conditions

Input parameters and initial conditions used for the analysis of this event are given in Table 6.3-6.

15.6.5.3.3 Results

Results of this event are given in detail in Sections 6.2 and 6.3. The temperature and pressure transients resulting from this accident are insufficient to cause perforation of the fuel cladding. Therefore, no fuel damage results from this accident. The containment integrity is maintained. Postaccident tracking instrumentation and control is ensured. Continued long term core and containment cooling is demonstrated. Radiological effects are minimized and kept within limits. Continued operator control and surveillance are examined and guaranteed.

15.6.5.3.4 Consideration of Uncertainties

This event was conservatively analyzed; see Sections 6.2, 6.3, 7.3, 7.6, and 8.3. In order to account for uncertainties in the accident, additional conservative assumptions were utilized in the analysis to maximize the dose consequences:

a. MSIV leakage is through the three shortest main steam lines. No leakage is assumed in the longest main steam line

b. The outboard steam lines are assumed to be at 554 F for the first 8 hours and decrease in four steps to 289 F at 96 hours

c. The inboard steam piping remains at 554 F through the duration of the accident

d. No hold up or deposition is credited in the secondary containment bypass leakage pathway

e. No mixing or hold up is credited in the secondary containment

f. The release points at the SGTS stack and the TBHVAC stack are modeled as ground level releases.

15.6.5.4 Barrier Performance

The design basis for the containment is to maintain its integrity and to experience normal stresses after the instantaneous rupture of the largest single primary system piping within the structure while also accommodating the dynamic effects of the pipe break at the same time an SSE is occurring. Therefore, any postulated LOCA does not result in exceeding the primary containment design limit. For details and results of the analyses, see Sections 3.6, 3.9, and 6.2.

15.6.5.5 Radiological Consequences

A schematic of the transport pathway is shown in Figure 15.6.5-1.

Edison's analysis of the radiological consequences of the design basis LOCA is consistent with the requirements of 10 CFR 50 and in accordance with Regulatory Guide 1.183. The analytical results were evaluated against the criteria contained in 10 CFR 50.67. Each criterion and fundamental assumption used in the analysis is, in itself, appropriately conservative. These criteria and assumptions, however, are used collectively and will likely result in substantially overestimating the potential exposures.

Among the assumptions that are used is that the primary containment is postulated to leak at a rate of 0.5 percent per day for the first 24 hours after the start of the postulated accident, then at a reduced rate of 0.25 percent per day for the remainder of the 30-day event.

The methods, assumptions, and conditions used to evaluate this accident are in accordance with those guidelines set forth in the NRC Standard Review Plan 15.0.1 and Regulatory Guide 1.183. The specific models, assumptions, and computer code used to evaluate this event on the bases of the above criteria are presented in References 7, 8 and 9. Specific values of parameters used in this evaluation are presented in Table 15.6.5-1.

15.6.5.5.1 Fission Product Release From Fuel

It is assumed, per Regulatory Guide 1.183 guidance, that core fission products are released consistent with the values shown in Table 15.6.5-1. Core activity at the start of the DBA-LOCA is an End-of-Cycle (EOC) condition with a core average burnup of 35 GWD/MTU, and based on an average initial enrichment of 4 percent. EOC is conservative in that I-131 is maximized. The powers model for natural deposition (incorporated in the RADTRAD code) is used, consistent with NUREG/CR-6604 and Regulatory Guide 1.183 methodology (Reference 7) to credit post-LOCA plateout in the drywell.

Activity deposited in containment can potentially be carried to the suppression pool. In order to assure that dissolved iodines remain in solution, the suppression pool water pH is maintained above 7 using sodium pentaborate injected into the reactor vessel using the Standby Liquid Control System. The SLCS is manually initiated, and injection is required to be complete within approximately 6 hours. The sodium pentaborate will reach the suppression pool through ECCS injection and spill through the break. The amount of sodium pentaborate solution that is required for the SLCS reactivity control function, and controlled per Technical Specifications, is sufficient to assure that the pH remains above 7 for the 30-day accident duration. For primary containment isolation purposes, the activity from the damaged core is assumed to begin to be released into the containment at 121 sec following the accident. This timing assumption recognizes conclusions derived from the source term studies described in NUREG-1465, Regulatory Guide 1.183 and Reference 4. During a DBA LOCA, the drywell and torus air volumes are uniformly mixed due to steam action driving the drywell volume into the suppression pool. However, for the first 2 hours of this accident it is conservatively assumed that no mixing between the drywell and suppression pool occurs. This concentrates the source term in the drywell air volume increasing the dose consequences to personnel. After 2 hours, the drywell and torus air volumes are modeled to instantaneously and homogeneously mix. Natural deposition of iodine particulate (aerosol) is credited in the primary containment utilizing the Powers natural deposition algorithm. No credit is taken for either suppression pool scrubbing or for the use of containment sprays.

15.6.5.5.2 Fission Product Transport to the Environment

The transport pathway consists of leakage from the primary containment to the secondary containment by several different mechanisms, as well as discharge to the environment through the standby gas treatment system (SGTS) at an elevated location and modeled as a ground level release. The SGTS filter efficiency for iodine removal is assessed as 99 percent. The assumed mechanisms for leakage from the primary containment are discussed below.

a. Containment leakage

The design basis leak rate of the primary containment and its penetrations to the secondary containment is 0.5 percent per day, reduced to 0.25 percent per day at 24 hours for the remaining duration of the accident. Ninety percent of the activity in the secondary containment escapes to the environment via SGTS which has a 99 percent efficiency. Ten percent of the activity in the secondary containment bypasses SGTS. The bypass leakageis released through the TBHVAC stack and modeled as a ground release. The duration of exfiltration

during the drawdown of the secondary containment is 15 minutes after the 2-minute gap release. No credit is taken for mixing and holdup within the secondary containment structure. Figure 15.6.5-1 is an illustration of the release path to the environment.

b. Leakage from engineered safety feature (ESF) components outside the primary containment, which is filtered by the SGTS. The ECCS leakage is limited to 5 gpm for the 30-day duration of the accident. Two percent of the iodine is assumed to become airborne and is released as 97 percent elemental and 3 percent organic.

c. An MSIV leakage rate totaling 250 scfh, with a maximum of 100 scfh in one main steam line. The worst case single failure is a failure of an outboard MSIV to close in the broken line with the highest flow and shortest length outside primary containment. To credit activity removal in a main steam line, a steam line is modeled as two well mixed deposition nodes, as the formulations in AEB 98-03, Appendix A (Reference 8) are used. The settling velocity for aerosol particulate nuclides is a median velocity based on a Monte Carlo analysis; only horizontal piping is credited, and the aerosol settling area is assumed to be only the bottom half of this piping. For elemental iodine, the entire volume and inside surface area is available for deposition, the deposition velocity from the Cline report of Reference 9 was used because gravitational settling is not an applicable transport mechanism. No organic iodine removal is credited. There is no iodine removal credited in the broken steam line upstream of the inboard MSIV. Time dependent pipe wall temperatures are applied to the piping downstream of the inboard MSIV.

Shutdown cooling operation during the 30-day period after a LOCA would involve recirculation of the emergency core coolant water stored in the suppression pool. The emergency core cooling systems used would be the core spray system to cool the reactor core and the RHR system to remove the heat from the emergency coolant. Reactor core cooling with the core spray system is described in Subsection 6.3.2.2.3. Containment cooling with the RHR system is described in Subsection 5.5.7.3.3.

There is no storage of emergency coolant in these systems except in the suppression pool.

The two redundant core spray loops are not connected. The redundant RHR divisions are cross connected for LPCI injection with an isolation valve.

Non seismic piping systems connected to the core spray or RHR systems are seismically qualified up to the first seismic constraint beyond the isolation valve that separates the safety related and non seismic portions of the piping system, as discussed in Section 3.7.3.13. Relief valves on both the RHR and core spray systems discharge back to the suppression pool. The RHR heat exchanger vent lines also drain back to the suppression pool.

The ECCS pump manufacturer's design criteria and technical manuals state that expected leakage for the pump seals is essentially zero. Experience has shown that occasionally seals have a slight leakage when first started; after a short period, this leakage usually ceases.

Edison believes the leakage from the ECCS pump seals to be essentially zero. Industry-wide experience has shown no significant leakage through such pump seals. In spite of this

experience and the pump manufacturer's design criteria, which strongly indicate the expected leakage through the seals to be insignificant, the radiological consequences of leakage of water from the emergency cooling water systems have been examined. Hence, in accordance with Appendix B of NRC Standard Review Plan 15.6.5, leakage of ECCS was assumed and a conservative leakage rate of 5-gpm was assigned. It was further assumed that 98 percent of ECCS coolant remains in an unflashed state and that SGTS filter efficiency is 99 percent. The resulting activity in the secondary containment thus undergoes reduction by a factor of five thousand before its release to the environment.

The iodine released to the primary containment includes 95 percent cesium iodine, 4.85 percent elemental iodine, and 0.15 percent organic forms. The assumption of this specification is predicated on maintaining the suppression pool pH 7.0 or higher. At pH below 7.0, elemental iodine may evolve from the water pool and invalidate this specification. The standby liquid control system (SLC) will be used to establish and maintain the pH of the suppression pool at 7.0 or higher. Operators will be directed to initiate SLC when high radiation levels and LOCA symptoms are detected in the primary containment. Due to the mixing action of the ECCS in the RPV, the suppression pool pH control will be effective within 6 hours.

15.6.5.5.3 Results

The calculated exposures for the design basis analysis are presented in Table 15.6.5-4 and are well within the guidelines of 10 CFR 50.67. Dose associated with coolant activity release in the first 121 sec of the accident is not included in this table. Its contribution to the accident dose is insignificant (on the order of 2 rem thyroid at the Exclusion Area Boundary). The control room dose analysis is found in Appendix 15A.

15.6.6 Feedwater Line Break Outside Containment

For the purpose of evaluating large liquid process line pipe breaks outside containment, the failure of a feedwater line is assumed to evaluate the response of the plant design to this postulated event. The postulated break of the feedwater line, which is the largest liquid line outside the containment, provides the envelope evaluation relative to this type of occurrence. The break is assumed to be instantaneous, circumferential, and downstream of the outermost isolation valve.

A more limiting event from a standpoint of core performance evaluation, feedwater line break inside containment, has been quantitatively analyzed in Section 6.3, Emergency Core Cooling Systems. Therefore, the following discussion provides only new information not presented in Section 6.3. All other information is covered by cross referencing to appropriate subsections in Chapter 6.

15.6.6.1 Identification of Causes and Frequency Classification

15.6.6.1.1 Identification of Causes

A feedwater line break is assumed without identification of the cause. The subject piping is designed to meet engineering codes and standards and severe seismic environmental requirements.

15.6.6.1.2 Frequency Classification

This event is categorized as a limiting fault.

15.6.6.2 Sequence of Events and Systems Operation

15.6.6.2.1 Sequence of Events

The typical sequence of events is shown in Table 3.6-6.

15.6.6.2.2 Systems Operation

The feedwater system operation is described in Subsection 3.6.2.2.2.

15.6.6.3 Core and System Performance

15.6.6.3.1 Qualitative Summary

The accident evaluation qualitatively considered in this subsection is considered to be a conservative and enveloping assessment of the consequences of the postulated failure (i.e., severance) of one of the feedwater piping lines external to the containment. The accident is postulated to occur at the input parameters and initial conditions given in Table 6.3-6.

15.6.6.3.2 Qualitative Results

The feedwater line break outside containment is less limiting than either the steam line breaks outside containment (analysis presented in Section 6.3 and Subsection 15.6.4) or the feedwater line break inside containment (analysis presented in Subsection 6.3.3). It is far less limiting than the design basis accident (the recirculation line break analysis presented in Subsections 6.3.3 and 15.6.5).

The reactor vessel is isolated on level 1 water level. HPCI, which activates at level 2, restores the reactor water level to normal elevation. The fuel is covered throughout the transient, and there are no pressure or temperature transients sufficient to cause fuel damage.

15.6.6.3.3 Consideration of Uncertainties

This event was conservatively analyzed, and uncertainties were adequately considered (see Section 6.3 for details).

15.6.6.4 Barrier Performance

Accidents that result in the release of radioactive materials outside the primary containment are the results of postulated breaches in the reactor coolant pressure boundary or the steam power conversion system boundary. A break spectrum analysis for the complete range of reactor conditions indicates that the limiting fault event for breaks outside containment is a complete severance of one of the main steam lines as described in Subsection 15.6.4.

15.6.6.5 Radiological Consequences

The analysis is based on a conservative assessment of this accident. The accident evaluation considered is an assessment of the consequences of a failure of the feedwater piping external to containment for the specific Fermi 2 system.

Specific values of parameters used in the evaluation are presented in Table 15.6.6-1. A schematic diagram of the break and the leakage path for this accident is shown in Figures 15.6.6-1 and 15.6.6-2.

15.6.6.5.1 Fission Product Release

There is no fuel damage as a consequence of this accident. In addition, an insignificant quantity of activity (compared to that existing in the main condenser hotwell prior to occurrence of the break) is released from the contained piping system prior to isolation closure.

In order to estimate the upper bounds of the dose consequences, it was assumed that the maximum Fermi Technical Specification limit for the primary coolant iodine concentration (0.2 microcuries per gram of dose equivalent I-131) exists at the time of the accident. In accordance with NUREG-0016 (Revision 1), an iodine carryover factor of 0.004 (0.4 percent carryover) was taken between the reactor coolant and the condenser hotwell. Noble gas activity in the condensate is negligible, since the air ejectors remove essentially all noble gas from the condenser.

15.6.6.5.2 Fission Product Transport to the Environment

The transport pathway consists of liquid release from the break, carryover to the turbine building atmosphere due to flashing and partitioning, and unfiltered release to the environment through the turbine building ventilation system.

Of the 1,484,907 lb of condensate released from the break, 237,779 lb flashes to steam, with an assumed iodine carryover of 100 percent. Of the activity remaining in the unflashed liquid, 5 percent is assumed to become airborne. Normally, all feedwater reaching the break location will have passed through condensate demineralizers that have a 90 percent iodine removal efficiency. However, as a result of the increased feedwater flow caused by the break, differential pressure across the demineralizers is assumed to initiate flow through the demineralizer bypass line. This bypass line then carries 15 percent of the total flow, resulting in an effective iodine removal efficiency for all flow of 76.5 percent.

Taking no credit for holdup, decay, or plate out during transport through the turbine building, the resultant release of dose- equivalent I-131 activity to the environment is 0.026 curie. The entire release is assumed to take place within 2 hr of the occurrence of the break.

15.6.6.5.3 Results

The calculated exposures for the realistic analysis are presented in Table 15.6.6-2 and are a small fraction of 10 CFR 100 guidelines.

15.6 DECREASE IN REACTOR COOLANT INVENTORY

REFERENCES

1. F. J. Moody, "Maximum Two-Phase Vessel Blowdown From Pipes," ASME Paper Number 65-WA/HT-1, March 15, 1965.
2. F. J. Brutschy, C. R. Hills, N. R. Horton, and A. J. Levin, Behavior of Iodine in Reactor Water During Plant Shutdown and Startup, NEDO-10585.
3. P. P. Stancavage and E. J. Morgan, Conservative Radiological Accident Evaluation - The CONACO1 Code, NEDO-21143, March 1976.
4. General Electric Nuclear Energy, Prediction of the Onset of Fission Gas Release from Fuel in Generic BWR, NEDC-32963A, March 2000.
5. Federal Guidance Report No. 11, Limiting Values of Radionuclide Intake and Air Concentration and Dose Conversion Factors for Inhalation, Submersion, and Ingestion, 1988.
6. Federal Guidance Report No. 12, External Exposure to Radionuclides in Air, Water and Soil, 1993.
7. NUREG/CR-6604, RADTRAD: A Simplified Model for RADionuclide Transport and Removal and Dose Estimation, April 1998, Supplement 1, June 1999.
8. AEB-98-03, Assessment of Radiological Consequences for the Perry Pilot Plant Application using the Revised (NUREG-1465) Source Term, USNRC, Accident Evaluation Branch, Division of Systems Technology, Office of Nuclear Regulatory Research, December 9, 1998.
9. Cline, J.E. MSIV Leakage Iodine Transport Analysis, prepared for USNRC under Contract NRC-03-87-029, Task Order 74, March 26, 1991.
10. CLETTR DRG A00 04111, Accident Radiological Consequences for Fermi 2 Power Uprate, July 12, 1991.

TABLE 15.6.2-1 TYPICAL SEQUENCE OF EVENTS FOR INSTRUMENT LINE BREAK

Estimated Time (mins)	Event
0	Instrument line fails.
0-10	Identification of break is attempted.
10	Activation of residual heat removal and initiation of orderly shutdown occurs.
300	Reactor vessel is depressurized and break flow is determined.

TABLE 15.6.2-2 INSTRUMENT LINE BREAK ACCIDENT PARAMETERS TABULATED FOR POSTULATED ACCIDENT ANALYSES[b]

Reactor Operating Condition	3499
Time for Operator to Isolate Reactor Building and Initiate Shutdown (min)	10
Time to Depressurize Vessel (hr)	5.0
Iodine Concentration in Coolant Prior to Break (μCi/g dose-equivalent Iodine 131)	0.2
Iodine Activity Available for Spiking during Depressurization (Ci/bundle)	
I-131	2.14
I-132	3.21
I-133	5.03
I-134	5.44
I-135	4.79
Reactor Water Mass (lbm)	6.07E+5
Coolant Release Rate vs. Time (lbm/s)	(a)
Iodine Removal by Plateout (%)	50
Holdup in Reactor Building before Building Isolated	No
Release Filtered before Reactor Building Isolation	No
Removal Rate via SGTS after Reactor Building Isolation (%/day)	100
SGTS Iodine Filter Effic. (%)	99
Release Height (m)	0
χ/Q at EA Boundary (sec/m^3) 0-2 hours	1.23E-4
χ/Q at LPZ (sec/m^3)	
0-8 hours	9.83E-6
8-24 hours	1.59E-6
24-96 hours	1.18E-6
96-720 hours	5.92E-7

Note (a). NEDO-21142, RELAC Computer Code Manual.

(b) See Reference 10

TABLE 15.6.2-3 INSTRUMENT LINE FAILURE: ACTIVITY AIRBORNE IN THE REACTOR BUILDING (CURIES)

Isotope	10 Min*	1 Hour	2 Hours	8 Hours	1 Day	4 Days	30 Days
I-131	1.0E-20	1.26E+00	2.03E+00	2.74E+00	1.33E+00	5.08E-02	2.84E-14
I-132	1.0E-20	1.69E+00	2.26E+00	6.92E-01	2.76E-03	4.29E-14	1.00E-20
I-133	1.0E-20	2.93E+00	4.63E+00	5.37E+00	1.62E+00	7.24E-03	1.00E-20
I-134	1.0E-20	2.40E+00	2.49E+00	8.21E-02	1.32E-07	1.00E-20	1.00E-20
I-135	1.0E-20	2.72E+00	4.10E+00	3.31E+00	3.16E-01	8.00E-06	1.00E-20
Total	1.0E-20	1.10E+01	1.55E+01	1.22E+01	3.26E+00	5.80E-02	2.84E-14

* No holdup is assumed until reactor building isolation at 10 minutes.

TABLE 15.6.2-4 INSTRUMENT LINE FAILURE: ACTIVITY RELEASED TO THE ENVIRONMENT (CURIES)

Isotope	10 Minutes	1 Hour	2 Hours	8 Hours	1 Day	4 Days	30 Days
I-131	1.06E-02	1.08E-02	1.15E-02	1.87E-02	3.17E-02	4.34E-02	4.39E-02
I-132	9.56E-02	9.59E-02	9.67E-02	1.01E-01	1.02E-01	1.02E-01	1.02E-01
I-133	6.99E-02	7.04E-02	7.20E-02	8.74E-02	1.06E-01	1.17E-01	1.17E-01
I-134	1.91E-01	1.92E-01	1.93E-01	1.96E-01	1.96E-01	1.96E-01	1.96E-01
I-135	1.04E-01	1.05E-01	1.06E-01	1.18E-01	1.26E-01	1.27E-01	1.27E-01
Total	4.71E-01	4.73E-01	4.79E-01	5.21E-01	5.64E-01	5.86E-01	5.86E-01

TABLE 15.6.2-5 INSTRUMENT LINE FAILURE RADIOLOGICAL EFFECTS[b]

	Whole-Body Dose (rem)	Thyroid Inhalation Dose (rem)
Exclusion Area (915 m)	2.9(-5)[a]	1.9(-3)
Low-population zone (4827 m)	2.5(-6)	2.2(-4)

[a] 2.9(-5) = 2.9×10^{-5}.
[b] See Reference 10

TABLE 15.6.4.-1 TYPICAL SEQUENCE OF EVENTS FOR STEAM LINE BREAK OUTSIDE OF CONTAINMENT

Estimated Time (sec)	Event
0	Guillotine break of one main steam line occurs outside primary containment.
0.5	High steam line flow signal initiates closure of main steam line isolation valve.
<1.0	Reactor begins scram.
≤10.5	Main steam line isolation valves are fully closed.
15	Safety/relief valves open on high vessel pressure. The valves open and close to maintain vessel bottom pressure less than 1375 psi.
30	The RCIC and HPCI would initiate on low low water level (RCIC is considered unavailable; HPCI is assumed single failure and therefore would not be available).
80	Reactor water level inside shroud begins to drop slowly because of loss of steam through the safety/relief valves. Reactor bottom pressure remains less than 1375 psi.
555	ADS receives signal to initiate on low water level (level 1) signal. ADS bypass timer starts.
1155	All ADS timers timed out. ADS valves actuate. Vessel depressurizes rapidly.
1430	Low pressure ECCS systems are initiated. Reactor fuel is partially uncovered.
1475	Core is effectively reflooded and clad temperature heatup is terminated. There is no fuel rod failure. (Reference to Subsection 6.3.3)

TABLE 15.6.4-2 STEAM LINE BREAK ACCIDENT – PARAMETERS TABULATED FOR ACCIDENT ANALYSIS[a]

Power Level	3499 MWt
Reactor Operating Condition	Hot Standby
Iodine Concentration in Coolant (μCi/g dose-equivalent Iodine 131)	
Case 1	0.2
Case 2	4.0
MSIV Closure Time (sec)	10.5
Coolant Discharged from Break (lbm)	112,000
Fraction of Iodine in Released Coolant Assumed Airborne (%)	100
Noble Gas Release Rate prior to MSIV closure (μCi/sec after 30 min decay)	350,000
Holdup in Turbine Building	No
Release Height (m)	0
χ/Q at EA Boundary (sec/m^3)	
0-2 hours	1.23E-04
χ/Q at LPZ (sec/m^3)	
0-2 hours	1.39E-05

[a] See Reference 10

TABLE 15.6.4-3 STEAM LINE BREAK ACCIDENT: ACTIVITY RELEASED TO THE ENVIRONMENT (CURIES)

Isotope	Case 1[a] Activity	Case 2[b] Activity
I-131	3.16	6.29(1)
I-132	2.87(1)	5.73(2)
I-133	2.1(1)	4.23(2)
I-134	5.73(1)	1.15(3)[c]
I-135	3.12(1)	6.29(2)
Total Halogens	1.41(2)	2.83(3)
Kr-83M	1.44(-1)	1.44(-1)
Kr-85M	2.6(-1)	2.6(-1)
Kr-85	7.97(-4)	7.97(-4)
Kr-87	8.41(-1)	8.41(-1)
Kr-88	8.5(-1)	8.5(-1)
Kr-89	3.59	3.59
Xe-131M	6.38(-4)	6.38(-4)
Xe-133M	1.24(-2)	1.24(-2)
Xe-133	3.51(-1)	3.51(-1)
Xe-135M	1.02	1.02
Xe-135	9.4(-1)	9.4(-1)
Xe-137	4.48	4.48
Xe-138	3.46	3.46
Total Noble Gases	1.59(1)	1.59(1)

[a] Case 1: Coolant concentration of 0.2 μCi/gm of I-131 DE.

[b] Case 2: Coolant concentration of 4.0 μCi/gm of I-131 DE.

[c] 1.15(3) = 1.15×10^3.

TABLE 15.6.4-4 STEAM LINE BREAK ACCIDENT: RADIOLOGICAL EFFECTS[b]

Case 1: Coolant concentration of 0.2 μCi/gm of I-131 DE

	Whole-Body Dose (rem)	Thyroid Inhalation Dose (rem)
Exclusion area (915 m)	9.0(-3)[a]	5.4(-1)
Low-population zone (4827 m)	1.02(-3)	6.08(-2)

Case 2: Coolant concentration of 4.0 μCi/gm of I-131 DE

	Whole-Body Dose (rem)	Thyroid Inhalation Dose (rem)
Exclusion area (915 m)	1.7(-1)	1.1(1)
Low-population zone (4827 m)	1.98(-2)	1.23(0)

[a] 9.0(-3) = 9.0×10^{-3}.

[b] See Reference 10

TABLE 15.6.5-1 LOSS-OF-COOLANT ACCIDENT – PARAMETERS TABULATED FOR POSTULATED ACCIDENT ANALYSIS

Reactor Power	3499
Initial Inventory and Release Fractions in Containment Atmosphere (%)	
Nobel Gases (2 min to 0.5 hrs, Gap Release)	5
Nobel Gases (0.5 hrs to 1.5 hrs, Early In-Vessel Release)	95
Halogens including Iodine (2 min to 0.5 hrs, Gap Release)	5
Halogens including Iodine (0.5 hrs to 1.5 hrs, Early In-Vessel Release)	25
Alkali Metals (2 min to 0.5 hrs, Gap Release)	5
Alkali Metals (0.5 hrs to 1.5 hrs, Early In-Vessel Release)	20
Tellurium Metals (2 min to 0.5 hrs, Gap Release)	0
Tellurium Metals (0.5 hrs to 1.5 hrs, Early In-Vessel Release)	5
Barium & Strontium (2 min to 0.5 hrs, Gap Release)	0
Barium & Strontium (0.5 hrs to 1.5 hrs, Early In-Vessel Release)	2
Noble Metals (2 min to 0.5 hrs, Gap Release)	0
Noble Metals (0.5 hrs to 1.5 hrs, Early In-Vessel Release)	0.25
Cerium Group (2 min to 0.5 hrs, Gap Release)	0
Cerium Group (0.5 hrs to 1.5 hrs, Early In-Vessel Release)	0.05
Lanthanides (2 min to 0.5 hrs, Gap Release)	0
Lanthanides (0.5 hrs to 1.5 hrs, Early In-Vessel Release)	0.02
Primary Containment Leak Rate (%/day)	
0 hrs to 24 hrs	0.5
24 hrs to 720 hrs	0.25
MSIV Leakage Rate (scfh)	
Maximum Allowable per Main Steam Line	100
Total	250
Iodine Species Distribution	
Cesium Iodine (aerosol)	0.95
Elemental	0.0485
Organic	0.0015
Iodine Species Fraction (ECCS Leakage)	
Aerosol	0.00
Elemental	0.97
Organic	0.03
Fraction of Containment Leakage which Bypasses SGTS (%)	10.0
Holdup in Secondary Containment	No
Reactor Building Volume (cu. ft.)	2,800,000

TABLE 15.6.5-1 LOSS-OF-COOLANT ACCIDENT – PARAMETERS TABULATED FOR POSTULATED ACCIDENT ANALYSIS

Duration of Exfiltration during Secondary Containment Drawdown (min) (does not include 2 minute gap release)	15
SGTS Iodine Efficiency (%)	99
ECCS Leakage in Secondary Containment	
Leak Initiation Time (min)	0
Leak Rate (gpm)	5
Fraction Flashed (%)	2
Filtered by SGTS	Yes
ECCS Fluid (gallons)	949,200
Drywell Air Volume (cu. ft.)	163,730
Torus Minimum Water Volume (cu.ft.)	117,160
Torus Air Volume (cu. ft.)	130,900
Reactor Water Mass (lbm)	6.07E+5
Control Room Intake (cfm)	
Filtered Intake	1800
Unfiltered Inleakage	173
Control Room Effective Intake Filter Efficiency (%)	99.75
Control Room Recirculation Rate (cfm)	1200
Control Room Recirculation Filter Efficiency (%)	95
Control Room Ventilated Volume	
Ventilation Volume (cu.ft.)	252,731
"Shine" Volume (cu.ft.)	56,960
Effective Release Height (m)	
SGTS Release	0
Bypass Leakage	0

TABLE 15.6.5-1 LOSS-OF-COOLANT ACCIDENT – PARAMETERS TABULATED FOR POSTULATED ACCIDENT ANALYSIS

χ/Q at EA Boundary (sec/m3)	
0-2 hours	2.09E-4
χ/Q at LPZ (sec/m3)	
0-8 hours	2.17E-5
8-24 hours	1.45E-5
24-96 hours	6.02E-6
96-720 hours	1.71E-6
Effective SGTS Release χ/Q for Control Room Using Most Favorable (South) Intake	
0-2 hours	6.18E-4
2-8 hours	4.53E-4
8-24 hours	1.88E-4
24-96 hours	1.26E-4
96-720 hours	8.70E-5
Effective TB Stack Release χ/Q for Control Room Using Most Favorable (North) Intake	
0-2 hours	4.75E-4
2-8 hours	3.78E-4
8-24 hours	1.45E-4
24-96 hours	9.80E-5
96-720 hours	7.19E-5
TB Stack ineligible for dual control room inlet credit	
Additional Reduction Factor for Dual Control Room Inlet (included in above SGTS CR χ/Q values)	1/4
Thyroid Inhalation DCF (rem/Ci)	FGR 11 and 12 Reference 5 & 6

TABLE 15.6.5-1 LOSS-OF-COOLANT ACCIDENT – PARAMETERS TABULATED FOR POSTULATED ACCIDENT ANALYSIS

Loss of Coolant Accident – Core Source Terms

Isotopic Nuclide	Decay Constant (hours)$^{-1}$	Release Fractions 0-0.5 hrs	Release Fractions 0.5-2 hrs	Initial Core Activity (Ci)	Isotopic Nuclide	Decay Constant (hours)$^{-1}$	Release Fractions 0-0.5 hrs	Release Fractions 0.5-2 hrs	Initial Core Activity (Ci)
Kr-85	7.376E-06	0.05	0.95	1.310E+06	Co-60	1.500E-05	0.00	0.0025	6.403E+05
Kr-85m	1.547E-01	0.05	0.95	2.342E+07	Mo-99	1,050E-02	0.00	0.0025	1.745E+08
Kr-87	5.451E-01	0.05	0.95	4.699E+07	Tc-99m	1.151E-01	0.00	0.0025	1.549E+08
Kr-88	2.441E-01	0.05	0.95	6.519E+07	Ru-103	7.353E-04	0.00	0.0025	1.464E+08
Xe-133	-5.506E-03	0.05	0.95	1.894E+08	Ru-105	1.561E-01	0.00	0.0025	9.888E+07
Xe-135	7.625E-02	0.05	0.95	5.077E+07	Ru-106	7.844E-05	0.00	0.0025	5.451E+07
I-131	3.592E-03	0.05	0.25	9.297E+07	Rh-105	1.960E-02	0.00	0.0025	9.181E+07
I-132	3.014E-01	0.05	0.25	1.365E+08	Ce-141	8.886E-04	0.00	0.0005	1.567E+08
I-133	3.332E-02	0.05	0.25	1.924E+08	Ce-143	2.100E-02	0.00	0.0005	1.449E+08
I-134	7.907E-01	0.05	0.25	2.127E+08	Ce-144	1.016E-04	0.00	0.0005	1.326E+08
I-135	1.049E-01	0.05	0.25	1.832E+08	Np-239	1.226E-02	0.00	0.0005	1.767E+09
Rb-86	1.548E-03	0.05	0.20	1.668E+05	Pu-238	9.012E-07	0.00	0.0005	2.856E+05
Cs-134	3.835E-05	0.05	0.20	1.677E+07	Pu-239	3.286E-09	0.00	0.0005	3.642E+04
Cs-136	2.205E-03	0.05	0.20	5.119E+06	Pu-240	1.210E-08	0.00	0.0005	6.389E+04
Cs-137	2.636E-06	0.05	0.20	1.494E+07	Pu-241	5.491E-06	0.00	0.0005	1.346E+07
Sb-127	7.502E-03	0.00	0.05	7.971E+06	Y-90	1.083E-02	0.00	0.0002	1.191E+07
Sb-129	1.605E-01	0.00	0.05	2.977E+07	Y-91	4.936E-04	0.00	0.0002	1.185E+08
Te-127	7.413E-02	0.00	0.05	7.852E+06	Y-92	1.958E-01	0.00	0.0002	1.224E+08
Te-127m	2.650E-04	0.00	0.05	1.329E+06	Y-93	6.863E-02	0.00	0.0002	9.293E+07
Te-129	5.975E-01	0.00	0.05	2.829E+07	Zr-95	4.514E-04	0.00	0.0002	1.601E+08
Te-129m	8.596E-04	0.00	0.05	5.735E+06	Zr-97	4.101E-02	0.00	0.0002	1.512E+08
Te-131m	2.310E-02	0.00	0.05	1.836E+07	Nb-95	8.217E-04	0.00	0.0002	1.613E+08
Te-132	8.864E-03	0.00	0.05	1.338E+08	La-140	1.721E-02	0.00	0.0002	1.777E_08
Sr-89	5.719E-04	0.00	0.02	9.129E+07	La-141	1.764E-01	0.00	0.0002	1.547E+08
Sr-90	2.715E-06	0.00	0.02	1.153E+07	La-142	4.496E-01	0.00	0.0002	1.512E+08
Sr-91	7.296E-02	0.00	0.02	1.142E+08	Pr-143	2.130E-03	0.00	0.0002	1.414E+08
Sr-92	2.558E-01	0.00	0.02	1.212E+08	Nd-147	2.630E-03	0.00	0.0002	6.298E+07
Ba-139	5.029E-01	0.00	0.02	1.695E+08	Am-241	1.830E-07	0.00	0.0002	1.715E+04
Ba-140	2.267E-03	0.00	0.02	1.706E+08	Cm-242	1.774E-04	0.00	0.0002	4.314E+06
Co-58	4.079E-04	0.00	0.0025	5.350E+05	Cm-244	4.366E-06	0.00	0.0002	1.862E+05

TABLE 15.6.5-2 HAS BEEN INTENTIONALLY DELETED

TABLE 15.6.5-3 HAS BEEN INTENTIONALLY DELETED

TABLE 15.6.5-4 LOSS-OF-COOLANT ACCIDENT: RADIOLOGICAL EFFECTS

Fermi Unit 2 LOCA

Offsite and Control Room Doses

EAB (rem TEDE)	LPZ (rem TEDE)	Control Room (rem TEDE)	DOSE CONTRIBUTOR
1.719	0.653	0.563	Filtered Primary Containment (PC) Leakage (SGTS Filtration Not Credited for First 15 minutes) [90% of L_A]
6.928	3.755	3.076	MSIV Leakage [250 scfh total all MS lines, 100 scfh max/line] & Unfiltered PC Leakage Bypassing Secondary Containment (SC) [10 % of L_A]
0.082	0.131	0.080	ECCS Leakage in Secondary Containment (SC) [5 gpm; 2% Flashing Fraction]
		0.040	Gamma Shine to Control Room (Direct Dose)
8.73	4.54	3.76*	Total Calculated Doses (173 cfm Unfiltered CR Inleakage)
25	25	5	Regulatory Limits

EAB – Maximum 2 Hour Accumulated Dose

LPZ, Control Room – 30 Day Accumulated Dose

* The total calculated dose reflects 30-day control room occupancy dose only. Access dose is estimated to be less than 1 rem TEDE; thus, total occupancy and access dose also remains within the limits of 10 CFR 50.67 and GDC 19.

TABLE 15.6.6-1 FEEDWATER LINE BREAK ACCIDENT – PARAMETERS TABULATED FOR POSTULATED ACCIDENT ANALYSES

	Assumptions
I. Data and assumptions used to estimate radioactive source from postulated accidents	
A. Power level	3499
B. Burnup	NA
C. Fuel damaged	None
D. Release of activity (dose- equivalent I-131), curies	0.026
E. Iodine fractions	
(1) Organic	0
(2) Elemental	1
(3) Particulate	0
F. Reactor coolant activity (dose- equivalent I-131), microcuries per gram	0.2
II. Data and assumptions used to estimate activity released	
A. Primary containment leak rate (percent/day)	NA
B. Secondary containment leak rate (percent/day)	NA
C. Isolation valve closure time (sec)	NA
D. Adsorption and filtration efficiencies	
(1) Organic iodine	NA
(2) Elemental iodine	NA
(3) Particulate iodine	NA
(4) Particulate fission products	NA
E. Recirculation system parameters	NA
(1) Flow rate	NA
(2) Mixing efficiency	NA
(3) Filter efficiency	NA
F. Containment spray parameters (flow rate, drop size, etc.)	NA
G. Containment volumes	NA
H. All other pertinent data and assumptions	None
III. Dispersion data	
A. Boundary and LPZ distance (m)	915/4827
B. χ/Q's for time intervals of	
(1) 0 - 2 hr - SB/LPZ	Table 15A-2
IV. Dose data	
A. Peak activity concentrations in containment	NA
B. Doses	Table 15.6.6-2

TABLE 15.6.6-2 FEEDWATER LINE BREAK: RADIOLOGICAL EFFECTS

	Whole-Body Dose (rem)	Thyroid Inhalation Dose (rem)
Exclusion Area (915 m)	4.5(-7)[a]	1.6(-3)
Low-population zone (4827 m)	5.1(-8)	1.8(-4)

[a] 4.5(-7) = 4.5×10^{-7}.

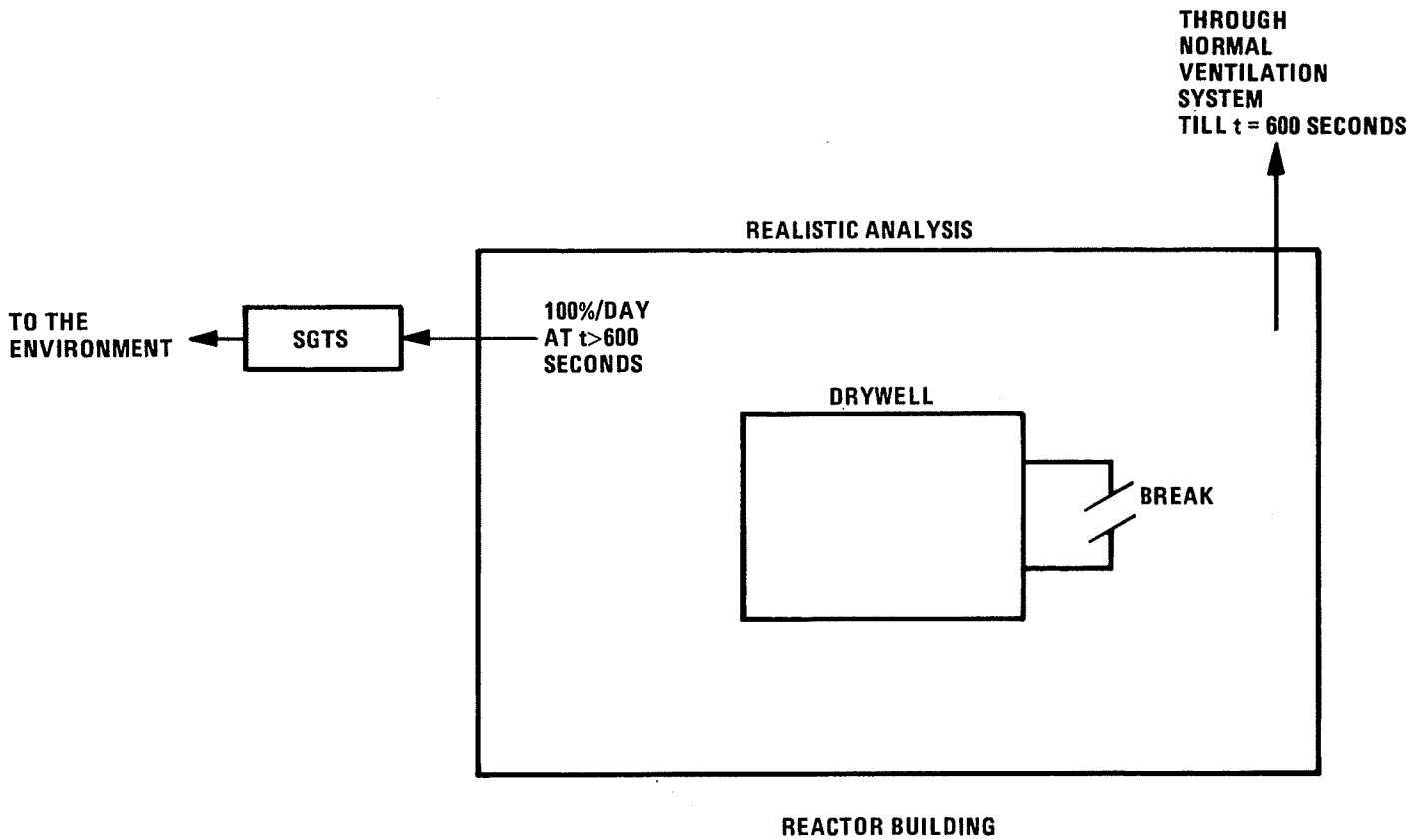

Fermi 2
UPDATED FINAL SAFETY ANALYSIS REPORT

FIGURE 15.6.2-1

LEAKAGE PATH FOR INSTRUMENT LINE BREAK

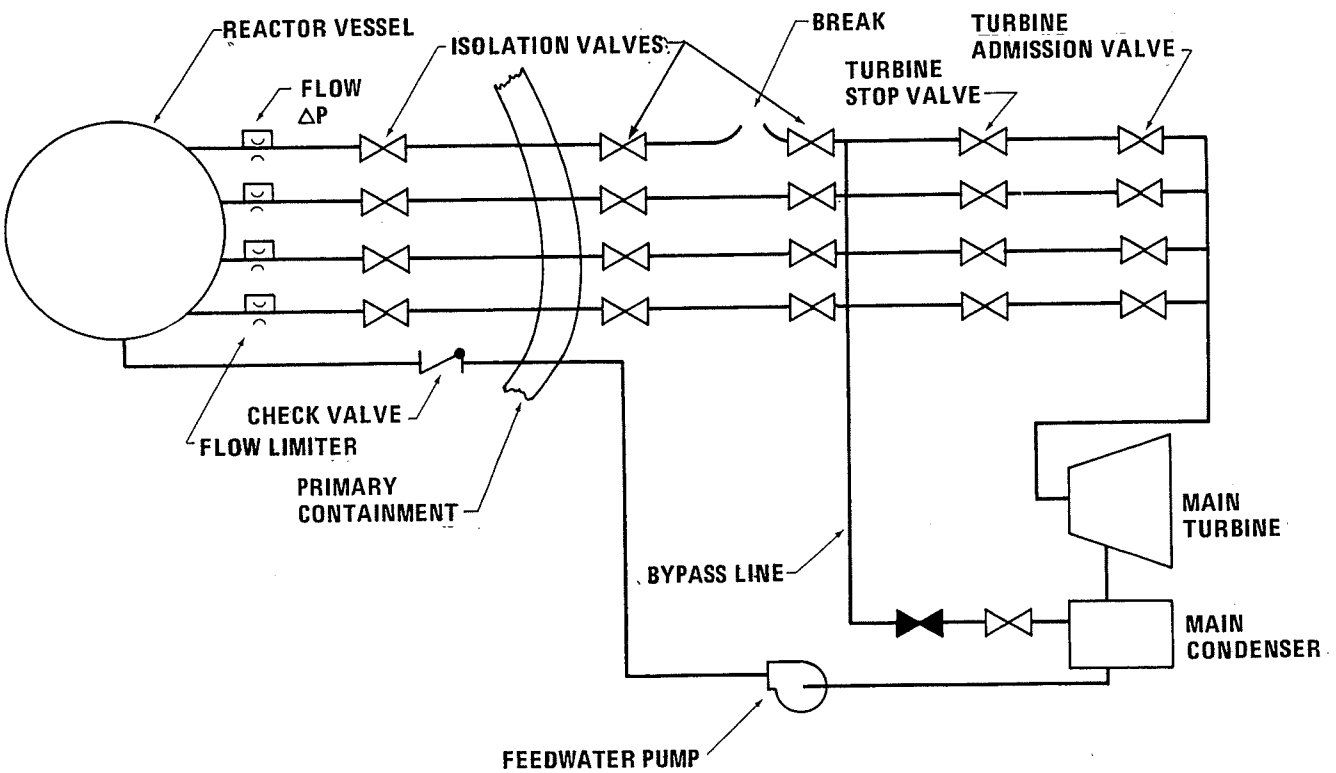

Fermi 2

UPDATED FINAL SAFETY ANALYSIS REPORT

FIGURE 15.6.4-1

STEAM FLOW SCHEMATIC

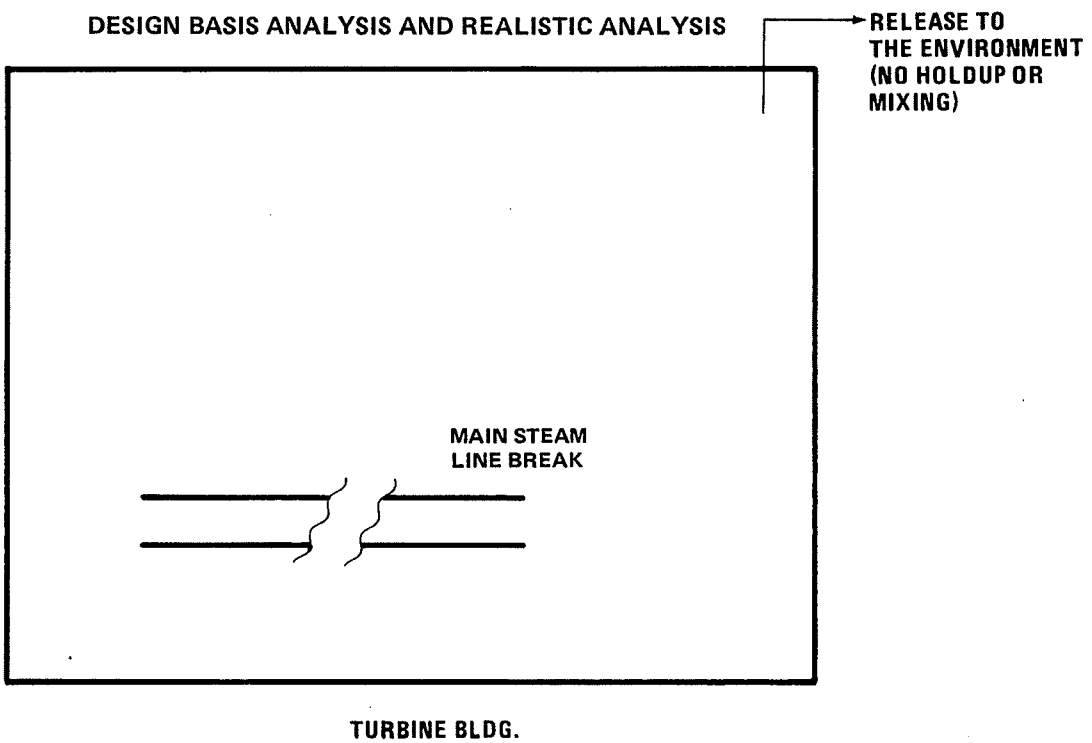

Fermi 2
UPDATED FINAL SAFETY ANALYSIS REPORT

FIGURE 15.6.4-2

LEAKAGE PATH FOR MAIN STEAM LINE BREAK ACCIDENT

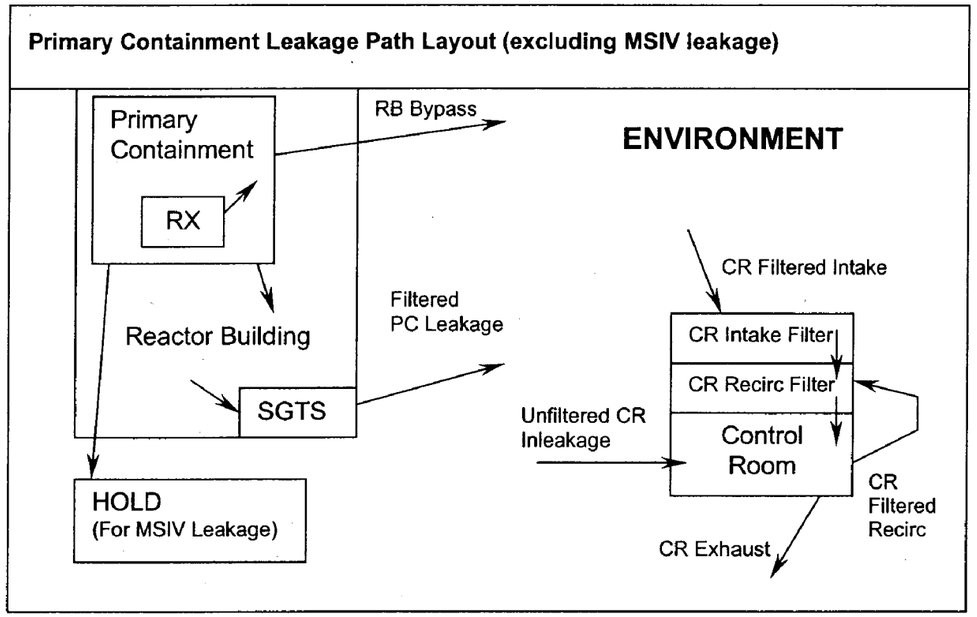

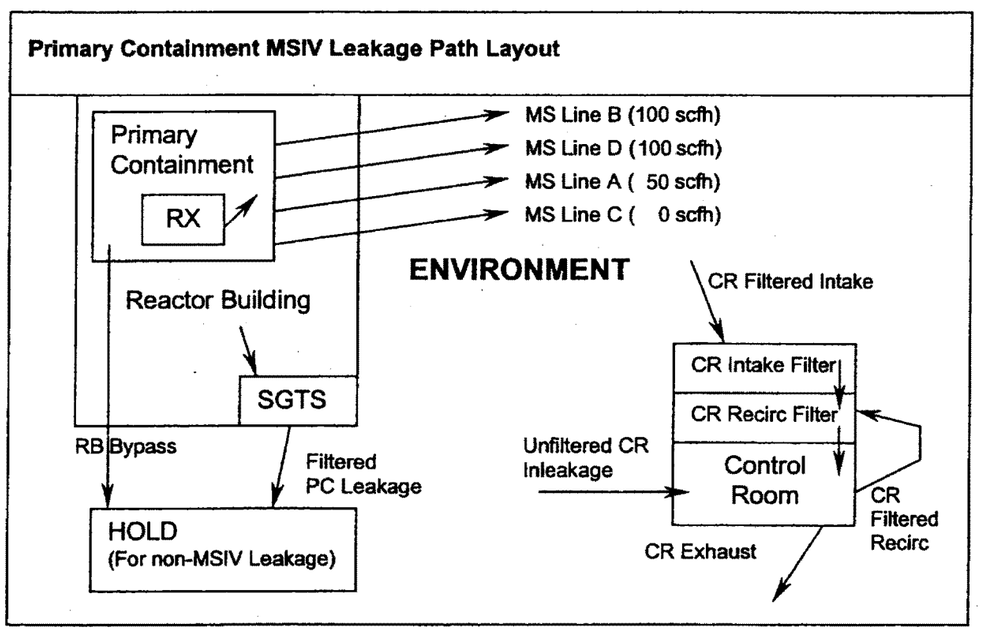

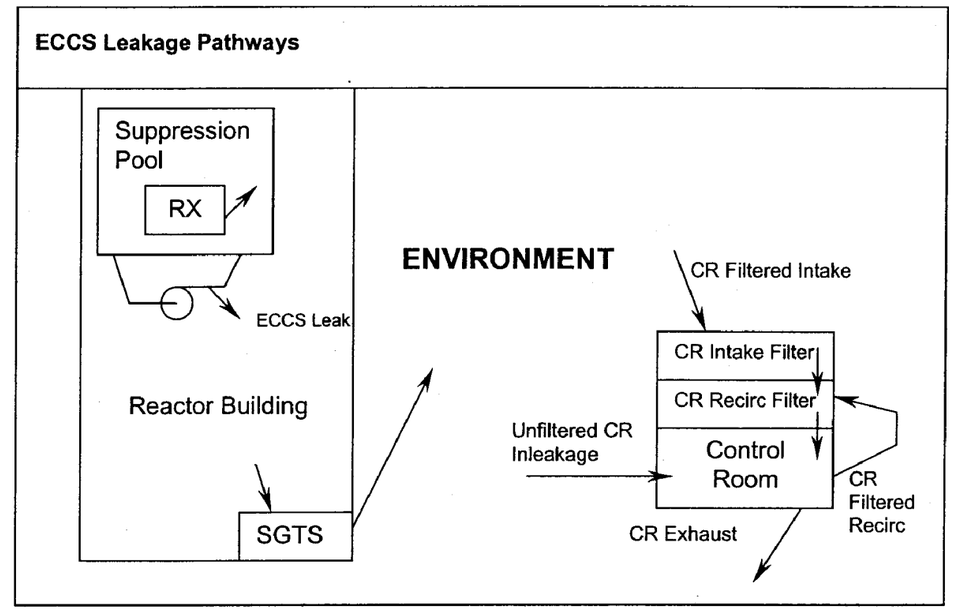

Fermi 2

UPDATED FINAL SAFETY ANALYSIS REPORT

FIGURE 15.6.5-1

LEAKAGE PATH FOR LOSS-OF-COOLANT ACCIDENT

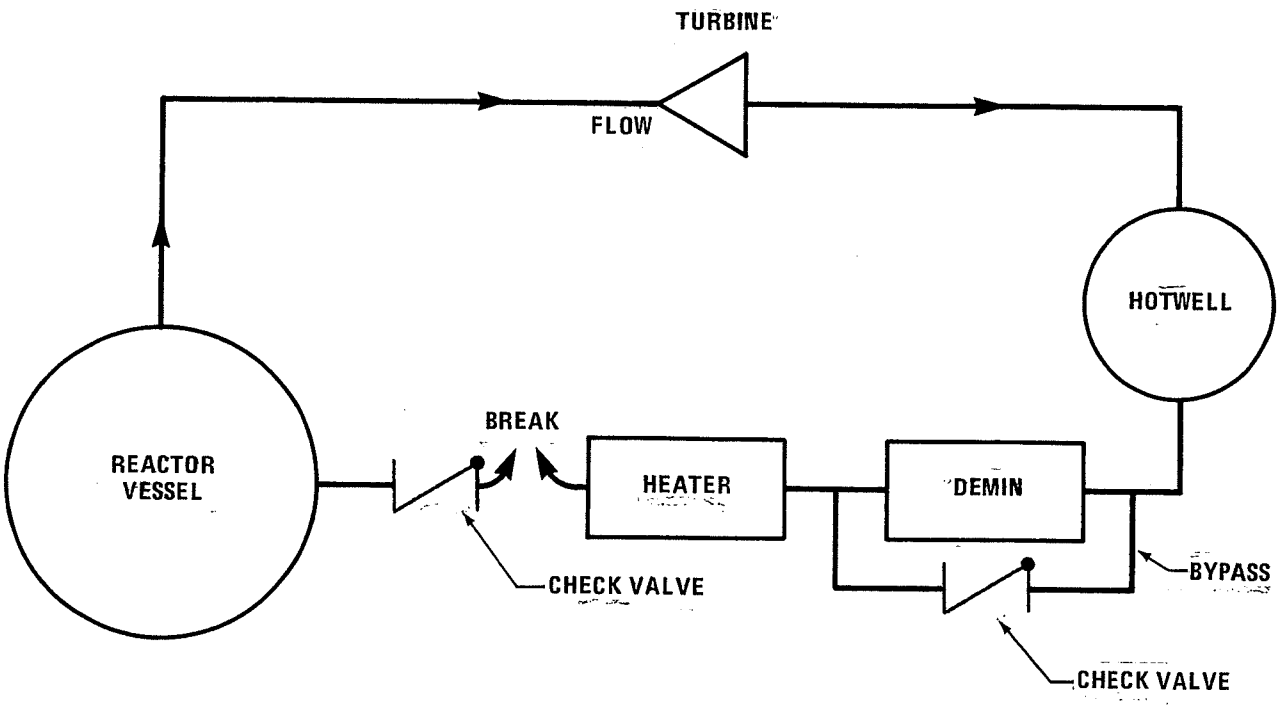

Fermi 2

UPDATED FINAL SAFETY ANALYSIS REPORT

FIGURE 15.6.6-1

POSTULATED LOCATION FOR FEEDWATER LINE BREAK OUTSIDE CONTAINMENT

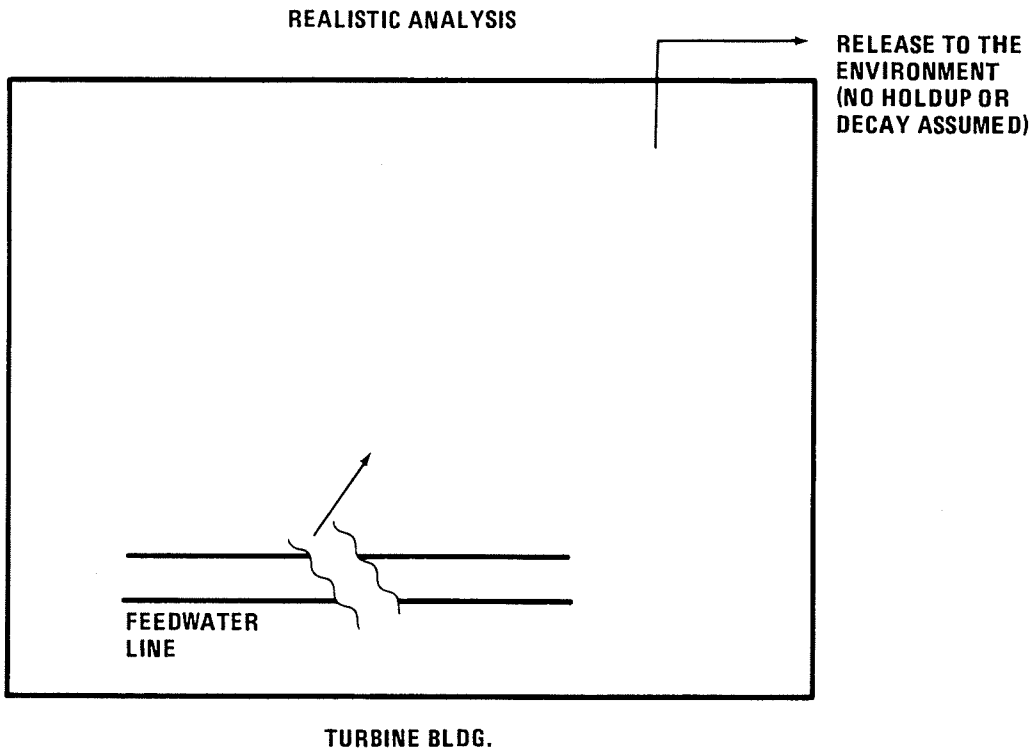

Fermi 2

UPDATED FINAL SAFETY ANALYSIS REPORT

FIGURE 15.6.6-2

LEAKAGE PATH FOR FEEDWATER LINE BREAK OUTSIDE CONTAINMENT

15.7 RADIOACTIVE RELEASE FROM SUBSYSTEMS AND COMPONENTS

Three events were evaluated under the radioactive release from subsystem and component analytical category:

a. Failure of main turbine steam air ejector lines

b. Hypothetical liquid and solid radwaste system accident

c. Fuel handling accident

None of these events are analyzed on a cycle-specific basis. A qualitative description of results is provided for those events determined to be nonlimiting from a core performance standpoint.

15.7.1 Failure of Main Turbine Steam Air Ejector Lines

This event involves a postulated break in the delay line downstream of the main turbine steam air ejector line.

15.7.1.1 Identification of Causes

An evaluation of those events that could cause a failure of the air ejector line indicates that a seismic event more serious than the system is designed to withstand is the only event that could rupture the lines. The lines are designed to withstand the effects of a hydrogen explosion.

The seismic induced failure is considered the most probable and most severe that the system is designed to prevent or accommodate. The seismic failure is the only conceivable event that could cause significant system damage.

The equipment and piping are designed to contain any hydrogen-oxygen detonation that has a reasonable probability of occurring. A detonation is not considered a possible failure mode.

The system is reasonably isolated from other systems or components that could cause any serious interaction or failure. The only credible event that could result in the release of significant activity to the environment is an earthquake.

An event more severe than the design requirements of the offgas system is arbitrarily assumed to occur, resulting in the failure of the offgas system. The design basis, description, and performance evaluation of the subject system are given in Section 11.3.

15.7.1.2 Sequence of Events and Systems Operation

15.7.1.2.1 Sequence of Events

It is assumed that the incident occurs while the reactor is operating at 3499 MWt. It is assumed that the delay line leading from the steam-jet air ejector to the offgas treatment system fails. This results in activity normally processed by the offgas treatment system being discharged directly to the turbine building and subsequently through the ventilation system to

the environment. This failure results in a signal of loss of flow to the offgas system. Table 15.7.1-1 presents the typical sequence of events.

15.7.1.2.2 Systems Operation

In analyzing the postulated steam air ejector line failure, no credit is taken for the operation of plant and reactor protection systems, or engineered safety features. Credit is taken for functioning of normally operating plant instruments and controls and other systems only in assuming the following:

a. Capability to detect the failure itself is indicated by an alarmed increase in radioactivity levels seen by the area radiation monitoring system and in an alarmed loss of flow in the offgas system

b. Capability to isolate the system and shut down the reactor

c. Operational indicator and annunciators in the main control room.

15.7.1.3 Core and System Performance

The postulated failure results in a system isolation necessitating reactor shutdown because of loss of vacuum in the main condenser.

15.7.1.4 Barrier Performance

The postulated failure is the break of the delay line downstream of the steam-jet air ejector. No credit is taken for performance of secondary barriers.

15.7.1.5 Radiological Consequences

The NRC provides specific guidelines for the evaluation of this accident in Regulatory Guide 1.98.

15.7.1.5.1 Fission Product Release

It is assumed that the reactor is operating at 3499 MWt with a steam flow of 1.52×10^7 lb/hr. The noble gas release rate at the steam-jet air ejector was assumed to be 350,000 μCi/sec (at 30-minute delay) for a period of 30 days prior to the accident. The reactor water concentrations in mCi/g for iodine were assumed to be the following:

^{131}I	0.047
^{132}I	0.43
^{133}I	0.32
^{134}I	0.86
^{135}I	0.47

The iodine activity per pound of steam is assumed to be 2 percent of the iodine activity per pound of reactor coolant. An additional iodine decontamination factor of 200 is assumed to exist between the condenser water and the offgas piping. No credit for plate-out in the turbine building is assumed.

The design-basis noble gas release rate is 350,000 μCi/sec at 30 minutes. However, for this accident the mix is assumed to be approximately 7 sec old at the time of release. Therefore, the noble gas release rate at the break location is approximately 4.9 x 10^6 μCi/sec.

It is assumed that the steam-jet air ejector continues to operate for a period of 1 hr after the accident. Activation gases are neglected. The total radioactive release from the break is assumed to be released over a 1-hr period. Table 15.7.1-2 presents the parameters used in this analysis. A schematic diagram of the break and the leakage path for this accident is shown in Figure 15.7.1-1.

15.7.1.5.2 Fission Product Release to the Environment

The total activity released to the environment during the 1-hr period is shown in Table 15.7.1-3 and is well below 10 CFR 100 limits.

15.7.1.5.3 Results

The calculated exposures for the design basis analysis are presented in Table 15.7.1-4 and are well below 10 CFR 100 limits.

15.7.3 Hypothetical Liquid and Solid Radwaste System Accident Analysis

15.7.3.1 Problem

The purpose of the accident analysis for the liquid radwaste system is to determine the consequences of a hypothetical uncontrolled release of radioactive liquids from the system. Regulatory Guide 1.143 and Standard Review Plan 15.7.3 require that the analysis assess the effects of this release on the health and safety of the public. It is assumed that the initiating event for the accident is a seismic induced total failure of the liquid radwaste system. This assumption is conservative in comparison with the requirements of Regulatory Guide 1.29. Subsection 15.7.3.2 describes the basic method of the analysis, and Subsection 15.7.3.3 describes the source terms used in the analysis. Subsections 15.7.3.4 and 15.7.3.5 describe the liquid pathway analysis and the atmospheric pathway analysis, respectively. For the power uprates, the data was evaluated at 3499 MWt which resulted in an approximate 2 percent increase in the radiological values.

The pathways considered in evaluating the consequences of the accident are (a) releases to the atmosphere of radioiodines from the spilled liquid and (b) contamination of the potable water supply by transport of radionuclides in the ground water. The sources and characteristics of radioactive contamination of the potable water supply are identified in the analysis and traced through the course of the accidental release to Lake Erie via the site ground water aquifer. The resulting hypothetical radioactivity level was determined at the location of the release to Lake Erie and at the City of Monroe public water supply intake. For the atmospheric release pathway, the controlling dose would be the inhalation thyroid dose to a maximally exposed individual (or a child located at the exclusion radius).

The liquid and solid radwaste system, as described in Chapter 11, is the basis for determining the amounts and types of contaminated liquids contained in the radwaste system at the time of the hypothetical event.

15.7.3.2 Basic Methodology

It is first assumed that all radwaste tanks that contain liquids are filled to full rated capacity (i.e., above the tank overflow point). It is then assumed that an earthquake takes place and that the seismic event causes simultaneous ruptures of all the radwaste tanks, releasing their contents to the basement floor of the radwaste building. A list of these tanks, their volumes, and their contents is given in Table 15.7.3-1.

For the liquid pathway analysis, it is assumed that a massive failure of the basement floor occurs as a result of the seismic event. Since the normal ground water level is above the top of the basement floor of the radwaste building, the initial flow will be into the radwaste building until the water levels are equalized. It is assumed (Subsection 2.4.13.3) that water will enter the radwaste building for a 3- to 4-week period. During this time, equipment can be mobilized for pumping, storage, processing, and disposal of the radioactive liquid. However, credit for these actions is not taken in this analysis. It is also assumed that spilled radwaste liquid will be diluted by at least a factor of 10 to 1 by the incoming ground water. This dilution factor is based on the ratio of the total spilled liquid volume to the available free volume, when considering the radwaste basement as the holding basin.

After the water levels are equalized, it is conservatively assumed that the diluted liquid containing the radwaste will move into and through the aquifer at the same rate of flow and in the same direction as the existing ground water in the aquifer. The direction of movement will be to the east at a rate of 0.24 ft/day, as described in Subsection 2.4.13.2. The length of time required for the liquid to travel the 460-ft distance from the radwaste building to the Lake Erie shoreline is 1920 days.

The total time required for the spilled liquid to reach the water of Lake Erie is calculated as follows:

25.5 days	-	for water levels to equalize
1920.0 days	-	to travel to Lake Erie
40.0 days	-	to move upward through till and lake bottom
1985.5 days		TOTAL

In determining the radionuclide concentration entering Lake Erie, only the credit for dilution occurring in the radwaste building and decay in transit was taken. Although there are other factors that lower the radionuclide concentrations entering the lake, they were not applied to this analysis. These factors are the sorption and ion exchange processes that occur in the soil while the radionuclides in the ground water are transported from the radwaste building to the lake.

For the atmospheric pathway analysis, the inhalation thyroid dose to a maximally exposed individual (or a child located at the exclusion radius) was calculated on the basis of the iodine isotopes released from the failed tanks. It is conservatively assumed that the gaseous iodine partition factor for cold radwaste liquid is 0.01; regulatory guidance allows a partition factor of 0.001 for determining expected releases. The resulting gaseous radioiodine releases are given at the bottom of Table 15.7.3-1. The inhalation thyroid dose was calculated using the

0-1 hr, 5-percentile meteorology, $\chi/Q = 1.52 \times 10^{-4}$ sec/m^3 (see Table 2.3-27), a breathing rate of 1.7×10^{-4} m^3/sec (for a child), and the methodology of Regulatory Guide 1.109.

15.7.3.3 Source Terms

A summary of source-term radionuclides is given in Table 15.7.3-1. It shows the isotopic radioactive source terms in each tank.

15.7.3.3.1 Primary Coolant Activity

The concentrations of the various isotopes in the primary coolant activity (PCA) during normal plant operation are shown in Table 15.7.3-2. These concentrations are based on the data provided in NUREG-0016, Revision 1 (BWR-GALE Code; see Reference 1). The concentrations correspond to a failed fuel level of a noble gas release rate of 50,000 mCi/sec at 30 minutes decay (equivalent to the 15-mCi/sec/MWt value called for in Section 15.7.3 of the Standard Review Plan). The tritium concentration is based on a production rate of 0.03 Ci/MWt, half of which is entrained in the liquid radwaste stream. This rate is also based on data presented in the BWR-GALE Code (Reference 1). The resulting concentrations entering the radwaste system tanks are conservatively assumed to be 0.01 mCi/g.

15.7.3.3.2 Radwaste System Activities

The activities accumulated in the radwaste system inventory at the time of the event are based on the normal operational throughput rates of the radwaste system. The system is assumed to be operating at equilibrium and processing at the normal level. The detailed results described herein assume that the mode of radwaste system operation includes evaporators, the asphalt extruder solidification system, and the etched-disk filter/oil coalescer train are in service. Alternative calculations were made for the overall operational mode of precoat filters in combination with vendor processing and with the evaporators not in service. This latter mode produced airborne and Lake Erie isotopic concentrations which were lower than the first assumed mode. The activities are based on expected normal levels at the particular stage of the tank in the decontamination process. The basic normal radioactivity inputs to the radwaste system (e.g., collector tanks and phase separators) are based on the flow rates listed in the process flow diagram (Figure 11.2-15), along with their corresponding fractions of primary coolant activity (see Table 15.7.3-3). The fractions of primary coolant activity of the effluents from the floor drain collector, waste collector, and chemical waste tanks are determined by the weighted average of the composite streams entering the tanks.

The isotopic concentrations within the radwaste system have been determined on the basis of the normal input streams and the processing equipment decontamination factors listed in Table 15.7.3-4. The computer code CORN (Concentration of Radionuclides; see Reference 2) was used to generate the activity values for the 16 radwaste tanks assumed to fail (see Table 15.7.3-1). This program calculates the specific isotopic concentration in effluent streams and processing equipment by accounting for the buildup and decay of all influent isotopes as they flow through the system, including the contribution of radioactive daughter products. The concentrations of each nuclide vary depending on the various phases of waste processing incurred by the fluids contained in each tank and on the waste retention times. The isotopic concentrations for all powdered and bead resin sludges, etched disk filter

backwashes, and evaporator concentrates were calculated on the basis of the buildup and decay of isotopes within the particular piece of process equipment.

The concentrations for the chemical waste tank, condensate phase separators, waste clarifier tank, waste surge tank, spent resin tank, chloride waste tank, centrifuge feed tank, and spent resin slurry feed tank are based on fractions of PCA. The factor of 0.02 for the chemical waste tank and the chloride waste tank is based on guidance from Reference 1 (BWR-GALE Code), Table 1-4. The table specifies this fraction of PCA for the lab drains and chemical lab waste activities, which are the plant input sources of these tanks. The other tank activities derived from PCA use a 0.002 factor, which is also based on Table 1-4 of Reference 2. The table specifies this factor for the cleanup phase separator decant, which is conservatively the highest radioactive input to each of these tanks.

The analysis assumes that all identified radionuclides are soluble in water and that those radionuclides trapped in the process resins by ion exchange remain within the resins and are not available for further transport. The analysis also assumes that for those tanks normally containing bead and powdered resin sludge (e.g., phase separators and feed tanks) the heavy, immobile sludge component is not available for transport to the aquifer. The remaining liquid component is represented by the values in Table 15.7.3-1.

The final source term analysis consisted of computing an average isotopic concentration for the accident (weighted according to each tank volume and concentration). These concentrations are listed in the second from last column of Table 15.7.3-1.

15.7.3.4 Liquid Pathway Analysis

As previously described, the liquid pathway analysis assumes a factor of 10 water dilution before the radioactivity leaves the radwaste basement and enters the aquifer. The resultant average diluted radionuclide concentrations (listed in the last column of Table 15.7.3-1) are, therefore, the aquifer entrance concentrations. Further attenuation through the aquifer is provided by the radioactive decay which occurs during the 1985.5-day travel time.

The concentration of each radionuclide as it enters Lake Erie is therefore calculated as follows:

$$\begin{bmatrix}\text{Concentration}\\ \text{entering Lake Erie}\end{bmatrix} = \begin{bmatrix}\text{Concentration}\\ \text{entering aquifer}\end{bmatrix} \times \exp\left[\frac{-0.693 \times \text{travel time}}{\text{Half-life}}\right]$$

The resultant concentrations from the liquid pathway were calculated at the closest intake of potable water from Lake Erie, which is at Monroe. There are no wells or other intakes for public water consumption between the site and the City of Monroe intake. The radionuclide concentrations attributable to this postulated accident at the potable water intake were assumed to be reduced by a factor of 77 due to dilution by lake water. (See Appendix B-3, Section III, of the Environmental Report.)

The isotopes, along with their half-lives, their average concentrations (C) in the tank before the release, their concentrations upon entering Lake Erie, and their concentrations at the potable water intake, are listed in Table 15.7.3-5. The average concentrations at the Monroe intake are compared with the maximum permissible concentrations (MPC) specified in Appendix B of 10 CFR 20. A summation ratio is obtained of the concentrations of the isotopes considered significant at the Monroe intake to the MPC for that isotope. Only those

isotopes with concentrations greater than 10^{-15} μCi/cm^3 were considered significant. The results produce a final ratio (∑ C/MPC) of 0.0031, which is well within the NRC requirements in Appendix B of 10 CFR 20. These values are shown in Table 15.7.3-6.

15.7.3.5 Atmospheric Pathway Analysis

The thyroid dose from inhalation by a maximally exposed individual (or a child located at the exclusion radius) was calculated using the methodology of Regulatory Guide 1.109 and a χ/Q value based on the 0-1 hr, 5-percentile meteorology (see Table 2.3-27). The quantity of radioiodine released to the atmosphere was calculated by multiplying the weighted average concentrations by the total tank volume and the conservative partition factor of 0.01.

The inhalation dose to the maximally exposed individual from radioiodines released to the atmosphere by this liquid spill is 5.12×10^{-4} rem to the thyroid of a child.

15.7.4 Fuel-Handling Accident

15.7.4.1 Identification of Causes and Frequency Classification

15.7.4.1.1 Identification of Causes

Accidents that result in the release of radioactive materials directly to the containment can occur when the drywell is open. A survey of the various conditions that could exist when the drywell is open reveals that the greatest potential for the release of radioactive material occurs when the drywell head and reactor vessel head have been removed. In this case, radioactive material released as a result of fuel failure is available for transport directly to the containment.

Various mechanisms for fuel failure under this condition have been investigated. With the current fuel design the refueling interlocks, which impose restriction on the movement of refueling equipment and control rods, prevent an inadvertent criticality during refueling operations. In addition, the reactor protection system can initiate a reactor scram in time to prevent fuel damage for errors or malfunctions occuring during planned criticality tests with the reactor vessel head off. It is concluded that the accident that could result in the release of the most significant quantities of fission products to the containment during this mode of operation is the one resulting from the accidental dropping of a fuel bundle onto the top of the core. This accident bounds postulated fuel handling accidents that may occur over the fuel chute, over the spent fuel pool, or over the fuel preparation machine containing a fuel bundle.

This event occurs under non-operating conditions for the fuel. The key assumption of this postulated occurrence is the inadvertent mechanical damage to the fuel rod cladding as a consequence of the fuel bundle being dropped on the core while in the cold condition. Therefore, fuel densification considerations do not enter into or affect the accident results.

15.7.4.1.2 Frequency Classification

This event is categorized as a limiting fault.

15.7.4.2 Sequence of Events and Systems Operation

15.7.4.2.1 Sequence of Events

From a radiological viewpoint, the most severe fuel handling accident is the dropping of a fuel assembly onto the top of the core. The sequence of events is as follows:

	Event	Approximate Elapsed Time
a.	Fuel assembly is being handled by refueling equipment. The assembly and mast drops onto the top of the core	0
b.	Some of the fuel rods in both the dropped assembly and reactor core are damaged, resulting in the release of gaseous fission products to the reactor coolant and eventually to the reactor building atmosphere	0
c.	The reactor building ventilation radiation monitoring system alarms to alert plant personnel, isolates the ventilation system, and starts operation of the SGTS	< 1 Minute
d.	Operator actions begin	< 5 Minute

15.7.4.2.2 Systems Operation

Normally, operating plant instrumentation and controls are assumed to function, but credit is taken only for the isolation of the normal ventilation system and the operation of the SGTS. Operation of other plant or reactor protection systems or ESF systems is not expected.

The radiation monitor provided to detect a fuel-handling accident is described in Subsection 11.4.3.8.2.11. The monitor has a full scale step response of 3 sec or less. Prior to the elimination of response time testing requirements, the Fuel Pool Ventilation Radiation monitor response time requirement was 500 msec or 0.5 sec. An elapsed time of 2 sec from detection of radiation to trip contact operation is included in the analysis.

Following a fuel handling accident, the reactor building ventilation isolation valves are designed to be 90 percent closed in 1 sec and 100 percent or fully closed in 3 sec. A 2-sec margin is judged necessary to account realistically for operating conditions throughout the life of the plant, resulting in an assumed full closure time of 5 sec. Therefore, the elapsed time from detection to valve full-closure is 7 sec.

The transit time from the worst case (shortest path – 153.7 ft long) ventilation exhaust grill to the ventilation inboard isolation valve is 2.7 sec. This time is based on a maximum velocity of 57.6 fps with the isolation valve fully open This is the highest velocity section of the duct run. The minimum duct transit time predicted, based on actual duct velocities, is 3.5 sec.

Assuming undegraded plant equipment, if a release occurs at the worst case exhaust grill, there is no expected release of the exhaust air to the environment. However, there is conservatism included in the assumed 2-sec detector response time and a 2-sec margin is added to the specified isolation valve stroke time for purposes of accounting for realistic conditions throughout the life of the plant.

The potential 4.3 sec of radioactivity release before SGTS actuation does not appreciably affect the analytical results given in this subsection. Even if no credit is given for isolation of the reactor building and actuation of the SGTS, the resultant calculated offsite doses (thyroid dose only is affected) are still a small fraction of those permitted by 10 CFR 50.67. The initial unfiltered release has a greater potential to affect onsite (operator) dose, however the results presented in this section demonstrate that the GDC19 criteria are still satisfied even without credit for the operation of the CREFS.

15.7.4.3 Core and System Performance

15.7.4.3.1 Mathematical Model

The analytical methods and associated assumptions used to evaluate the consequences of this accident are considered to provide a realistic, yet conservative, assessment of the consequences. The kinetic energy acquired by a falling fuel assembly may be dissi-pated in one or more impacts. To estimate the expected number of failed fuel rods in each impact, an energy approach is used.

The fuel assemblage is expected to impact on the reactor core at a small angle from the vertical, possibly inducing a bending mode of failure on the fuel rods of the dropped assembly. It is assumed that each fuel rod resists the imposed bending load by a couple consisting of two equal, opposite concentrated forces. Therefore, fuel rods are expected to absorb little energy prior to failure as a result of bending.

The energy absorption on successive impacts is estimated by considering a plastic impact. Conservation of momentum under a plastic impact shows that the fractional kinetic energy absorbed during impact is

$$1 - \frac{M_1}{M_1+M_2}$$

where M_1 is the impacting mass and M_2 is the struck mass.

15.7.4.3.2 Input Parameters and Initial Conditions

Three assumptions are used in the analysis of this accident.

a. The assemblage (fuel assembly plus NF-500 mast) is dropped from 34.0 feet (the maximum height allowed by the fuel handling equipment).

b. The entire amount of potential energy, including the energy of the entire assembly falling to its side from a vertical position (referenced to the top of the reactor core), is available for application to the fuel assemblies involved in the accident. This assumption neglects the dissipation of some of the mechanical energy of the falling fuel assembly in the water above the core and requires that the grapple head and three sections of the telescoping mast to remain attached to the falling assembly.

c. None of the energy associated with the dropped fuel assembly is absorbed by the fuel material (UO_2).

d. All fuel rods, including tie rods, were assumed to fail by 1 percent strain in compression, the same mode as ordinary fuel rods. For the fuel designs considered here, there is no propensity for preferential failure of tie rods.

15.7.4.3.3 Results

Because of the complex nature of the impact and the resulting damage to fuel assembly components, a rigorous prediction of the number of failed rods is not possible. For this reason, a simplified energy approach was taken and numerous conservative assumptions were made to assure a conservative estimate of the number of failed rods for the 9x9 fuel rod array bundle.

The number of failed rods was determined by balancing the energy of the dropped assemblage against the energy required to fail a rod. The wet weight of the dropped bundle is 562 pounds for the 9x9 fuel rod array bundle (617 pounds for the 7x7 fuel rod array bundle) and the wet weight of the grapple mast and head is 619 pounds. The drop distance is 34 feet. The total energy to be dissipated by the first impact is

$$E = (562 \text{ lb} + 619 \text{ lb}) (34 \text{ ft}) = (40{,}154 \text{ ft-lb}).$$

One half of the energy was considered to be absorbed by the falling assembly and one half by the four impacted assemblies.

No energy was considered to be absorbed by the fuel pellets (i.e., the energy was absorbed entirely by the non-fuel componenets of the assemblies). The energy available for clad deformation was considered to be proportional to the mass ratio:

$$\frac{\text{mass of cladding}}{(\text{mass of assembly} - \text{mass of fuel pellets})}$$

and is equal to a maximum of 0.510 for the fuel designs considered here.

The energy absorbed by the cladding of the four impacted assemblies is therefore

$$(20{,}077 \text{ ft} - \text{lbs})(0.510) = 10{,}239 \text{ ft} - \text{lbs}$$

Each rod that fails is expected to absorb approximately 200 ft-lb before cladding failure, based on uniform 1 percent plastic deformation of the cladding.

The number of rods failed in the four impacted assemblies is

$$N_F = \frac{(10{,}239 \text{ ft} - \text{lb})}{(200 \text{ ft} - \text{lb})} = 51 \text{ rods}$$

The dropped assembly was considered to impact at a small angle from vertical, subjecting all the fuel rods in the dropped assembly to bending moments. The fuel rods are expected to absorb little energy prior to failure as a result of bending. For this reason, it was assumed that all the rods in the dropped assembly fail. The total number of failed rods on initial impact was 74 + 51 = 125.

The assembly was assumed to tip over and result in a second impact horizontally on the top of the core from a height of one bundle length, approximately 160 inches. The remaining available energy was used to predict the number of additional rod failures. The available energy was calculated by assuming a linear weight distribution in the assembly with a point load at the top of the assembly to represent the fuel grapple weight.

$$E_2 = W_G\, H_G + \int_0^{H_B} (W_B/H_B) y\, dy$$
$$= W_G\, H_G + (0.5)\, W_B\, H_B$$
$$= (619 \text{ lb})(160/12) + (0.5)(562)\,(160/12)$$
$$= 12{,}000 \text{ ft-lb}$$

As before, the energy was considered to be absorbed equally by the falling assembly and the impacted assemblies and the fraction available for clad deformation was 0.510. The energy available to deform clad in the impacted assemblies was

$$E_C = (0.5)(12{,}000\, ft - lb)\,(0.510) = 3{,}060 \text{ ft} - \text{lb}$$

and the number of failures in the secondarily-impacted assemblies was

$$N_F = \frac{(3{,}060 \text{ ft}-\text{lb})}{(200 \text{ ft}-\text{lb})} = 15 \text{ rods}$$

Since the rods in the dropped assembly were considered to have failed in the initial impact, the total failed rods in both impacts is 125 + 15 = 140.

Similar calculations can be performed for both the 7x7 and 8x8 fuel rod array bundles. The corresponding results indicate 111 failed rods for the 7x7 fuel rod array bundle and 117 failed rods for the 8x8 fuel rod array bundle.

The number of failed rods associated with a 34-ft drop of GE14 (10x10) fuel is 172 based on NEDE-24011-P-A (Reference 13), which is the basis for the methodology described above.

15.7.4.4 Barrier Performance

The reactor coolant pressure boundary and primary containment are assumed to be open. The transport of fission products from the secondary containment is discussed in Subsections 15.7.4.5.1 and 15.7.4.5.2 below.

15.7.4.5 Radiological Consequences

The original Fermi 2 design basis analysis evaluated drops of 7x7, 8x8, and 9x9 fuel types based on the guidance in the NRC Standard Review Plan 15.7.4 and Regulatory Guide 1.25. The Fermi 2 Fuel Handling Accident has been re-analyzed in order to establish a basis for distinguishing between secondary containment and control room isolation and filtration system operability requirements during the movement of irradiated fuel depending on whether or not the fuel is considered recently irradiated. The operability of ESF systems and subsystems previously required to mitigate the radiological consequences of fuel handling accidents is not necessary after a sufficient post-shutdown decay period has elapsed. Prior to this decay period, the fuel is classified as recently irradiated and operability requirements for systems and subsystems supporting secondary containment and control room integrity and filtration apply.

The analysis documented in Reference 8 rebaselines the design basis accident associated with a drop of recently irradiated fuel bundle and also determines the duration of the post-shutdown decay period after which GE11 9x9 and GE14 10x10 fuel bundle types would no longer be considered as recently irradiated. Dose calculations defining the required delay

period for the 7x7 and 8x8 fuel bundle types were not performed as these bundle designs have been long since retired and are bounded by the 9x9 and 10x10 bundle drop analyses. As a result, the discussion of the radiological consequences associated with the 7x7 and 8x8 fuel types hereafter has been deleted from Section 15.7.4.

The re-analysis of the Fermi Fuel Handling Accident provided an opportunity to take advantage of the Alternate Source Term (AST) as defined in NRC Regulatory Guide 1.183 (Reference 7). This regulatory guide contains a set of assumptions, methodologies, and acceptance criteria (different from Regulatory Guide 1.25) that may be used to evaluate the radiological consequences associated with the Chapter 15 design basis accidents. Concerning the Fuel Handling Accident, the new guidance has the advantage of smaller gap fractions, and larger pool decontamination factor (DF), and dose criteria that replace both the 10 CFR 50.100 whole body and thyroid dose limits with a limit on Total Effective Dose Equivalent (TEDE) based on 10 CFR 50.67.

The ability to credit the new AST assumptions depends on the burnup and operating history of the fuel. Specifically, use of the AST non-LOCA gap fractions is predicated on the assumptions of a peak rod average burnup up to 62 GWD/MTU and a peak rod average Linear Heat Generation Rate (LHGR) not exceeding 6.3 kW/ft for exposures above 54 GWD/MTU (Reference 7, Table 3). Thus, the ability of the fuel in a given cycle to meet the Reference 7 criteria must be verified prior to applying the definition of recently irradiated during refueling operations. Cycle 8 9x9 irradiated fuel and the 10x10 fuel type loaded in RF10 for Cycle 11 did not challenge the Reference 7, Table 3 criteria on peak rod average burnup and LHGR and were evaluated under AST assumptions. Per the Reference 8 analysis, the radiological consequences associated with a drop of a 10x10 fuel bundle bound those for a drop of a 9x9 fuel bundle when both types are evaluated under the assumptions of the AST. The last GE11 9x9 fuel was discharged in RF14. All GE11 fuel is in the spent fuel pool, is no longer recently irradiated, and satisfies the Reference 7 burnup restriction.

The Reference 8 analysis evaluates the radiological consequences associated with fuel handling accidents where the AST assumptions are valid for both GE11 9x9 and GE14 10x10 fuel types. The required post-shutdown delay period for fuel that does not meet the Reference 7 burnup criterion is based on an evaluation of only the GE11 9x9 fuel type, which is no longer used in Fermi 2 fuel cycles, using the assumptions and methods originally employed in accordance with Regulatory Guide 1.25.

The specific models, assumptions, and program used for computer evaluation are described in References 7 through 11. Specific values of parameters used in the evaluation are presented in Table 15.7.4-1.

15.7.4.5.1 Fission Product Release From Fuel

The fission product inventory of a core average rod is adjusted by the applicable peaking factor to establish the inventory of each damaged rod. Only the fraction of the source term located inside the "gap" region of each rod is assumed to be released due to a bundle drop. The specific fractions applied in the analysis depend on whether Regulatory Guide 1.25 or Regulatory Guide 1.183 (AST) assumptions apply. In addition, in the case where Regulatory Guide 1.25 assumptions apply the Iodine-131 gap fraction has been increased

based on the discussion regarding the extended burnup license amendment in Section 15.7.4.5.4.

15.7.4.5.2 Fission Product Transport to the Environment

For fuel handling accidents involving recently irradiated fuel, the transport pathway is assumed to consist of mixing in the fuel pool, migration from the pool to the secondary containment atmosphere, and release to the environment through the SGTS. (It is possible for a slight amount of radioactivity to escape to the environment before initiation of the SGTS if no credit is given for nonsafety related dampers and the outboard safety related damper is assumed to fail open. See Subsection 15.7.4.2.2.) All of the noble gas and 1 percent (or 0.5 percent depending on whether AST applies) of the iodines in the fuel pool are assumed to become airborne in the secondary containment.

The airborne activity is released to the environment over a 2-hr period after filtration by the SGTS (99 percent removal efficiency for iodine). The release of activity to the environment is presented in Table 15.7.4-2. The analyses that define when irradiated fuel becomes no longer "recently irradiated", assume no credit for SGTS, CCHVAC recirculation filtration, or CREF filtration of iodine species. The analysis does assume that the source term on the refuel floor is released to the outside environment and enters the control room via the more limiting of the normal or emergency makeup air intakes, not via building internal ducts and pathways. The most likely release point is the RBHVAC exhaust stack. However, the Reference 8 analysis established a bounding secondary containment-to-control room atmospheric dispersion factor that did not correspond to a release via the RBHVAC exhaust stack. The analysis conservatively assumed the release is from the reactor building, south side ground level doors.

When the CREF and CCHVAC ductwork is breached in support of maintenance, the assumptions on the transport path of the source term are preserved through the application of administrative controls that are implemented prior to creating a breach to ensure that the transport of the fuel handling accident source term into the control room via the breach is not a credible possibility.

15.7.4.5.3 Results

The calculated exposures for the re-analyzed original design basis analysis (i.e., a drop of recently irradiated fuel 24-hours post-shutdown) are presented in Table 15.7.4-3 for 9x9 and 10x10 fuel types. The dose consequences for GE14 10x10 fuel analyzed in accordance with Regulatory Guide 1.183 bound the dose consequences of GE11 9x9 fuel that meets the burnup limitations of Regulatory Guide 1.183. The Table 15.7.4-3 values are well below the guidelines of 10 CFR 100, 10 CFR 50.67, and SRP 6.4 as applicable. The calculated exposures for the design basis accident which defines the required post-shutdown delay period after which irradiated fuel is no longer considered recently irradiated are presented in Table 15.7.4-4. With the introduction of GE14 10x10 fuel in RF10, and beginning in Cycle 11, the required post-shutdown delay for fuels that meet the Regulatory Guide 1.183 burnup requirements is approximately 6.3 days (151 hours), based on a maximum control room operator 30-day integrated dose of 5 rem TEDE. The required post-shutdown delay for fuel that does not meet the Regulatory Guide 1.183 burnup limitations is approximately 37 days corresponding to the 9x9 fuel type, which is no longer used at Fermi, and based on a

maximum control room operator dose of 30 rem thyroid, 5 rem whole body. The Table 15.7.4-4 results show that the control room operator dose consequences associated with drops of fuel that is not recently irradiated fuel without secondary containment and control room isolation and filtration bound those of the original design basis accident.

15.7.4.5.4 Evaluation of the Impact of Uprated Power Operation and Extended Fuel Burnup

The analysis of the radiological consequences of the Fuel Handling Accident involving recently irradiated 9x9 fuel, which is no longer used at Fermi, that does not meet the AST burnup specifications are based on NRC Standard Review Plan 15.7.4 and Regulatory Guide 1.25. The assumptions given in Regulatory Guide 1.25 related to the release of radioactive material from the fuel and fuel storage facility as a result of a fuel handling accident, however, are only valid for fuel with an average burnup for the peak assembly of 25000 MWD/MTU or less (which corresponds to a peak local burnup of about 45000 MWD/MTU).

In a report prepared for the NRC by Pacific Northwest Laboratory (PNL) entitled "Assessment of the Use of Extended Burnup Fuel in Light Water Power Reactors," NUREG/CR-5009, dated February 1988, PNL examined the changes that could result in the NRC design-basis accident (DBA) assumptions contained in various Standard Review Plan Sections and Regulatory Guides as a result of extended fuel burnup (up to 60,000 MWD/MTU). PNL concluded, and the NRC Staff subsequently agreed, that the only DBA which could be affected by the extended fuel burnup would be the potential thyroid doses that could result from a fuel handling accident. The PNL report estimated that the calculated iodine gap-release fraction for fuel with extended burnup would be 20 percent greater for some high power fuel designs than the assumed value of 0.10 stated in Regulatory Guide 1.25. Thus, the calculated thyroid doses resulting from a fuel handling accident with extended burnup fuel could be 20 percent higher than those estimated using Regulatory Guide 1.25. The results of this report were later used as the basis for an NRC Environmental Assessment published in the Federal Register (53 FR 6040).

In response to an NRC Staff question concerning Detroit Edison's submittal for Power Uprate (License Amendment 87), Detroit Edison noted in a February 24, 1992 letter to the NRC its plans to use fuels enriched to a maximum of 5.0 percent by weight of Uranium-235 and fuel burnup levels not exceeding a maximum rod average burnup of 60,000 MWD/MTU. The letter also stated that these values of fuel enrichment and burnup were bounded by the NRC Environmental Assessment and that the conclusions made in the Environmental Assessment were applicable to Fermi 2. The NRC Staff subsequently agreed with Detroit Edison's statement that the conclusions of the Environmental Assessment published in the Federal Register (53 FR 6040) are applicable to Fermi 2, and that the use of extended burnup fuels within the limit specified above will have no significant adverse radiological or non-radiological impacts, and will not significantly affect the quality of the human environment.

During the course of its review of the Detroit Edison submittal for Power Uprate (License Amendment 87), the NRC Staff reevaluated the fuel handling accident for Fermi 2 using the uprated power level. The calculated 2-hour thyroid dose at the exclusion boundary was determined to remain less than 1 rem. Similarly, the low population zone thyroid and whole-body doses would be expected to remain less than 0.1 rem for the fuel handling

accident. The staff concluded that the potential increased doses resulting from DBA with extended burnup levels of up to 60,000 MWD/MTU, met the acceptance criteria provided in Standard Review Plan Section 15.7.4, and will remain within the dose guidelines described in 10 CFR Part 100. Consequently, the staff concluded that the changes proposed by Detroit Edison with respect to the use of fuel with Uranium-235 enrichments up to 5 percent and burnup not exceeding 60,000 MWD/MTU were acceptable.

The Alternate Source Term described in Regulatory Guide 1.183, considers fuel burnup up to 62,000 MWD/MTU peak rod average. Thus, the AST assumptions on peak rod average exposure bound the Fermi 2 extended burnup granted in License Amendment 87; however, the Regulatory Guide 1.183 (Table 3 Footnote 11) also places a restriction on Linear Heat Generation Rate that must also be satisfied in order for the non-LOCA AST gap fractions to be valid. GE 10x10 fuel types are not expected to challenge the burnup limitations specified in Regulatory Guide 1.183 and the AST gap fractions are applied to GE11 9x9, which is no longer used at Fermi, and GE14 10x10 AST-fuels.

15.7 RADIOACTIVE RELEASE FROM SUBSYSTEMS AND COMPONENTS

REFERENCES

1. U.S. Nuclear Regulatory Commission, Calculation of Releases of Radioactive Materials in Gaseous and Liquid Effluents From Boiling Water Reactors (BWR-GALE Code), PB-291025, NUREG-0016, Revision 1, January 1974.
2. S. J. Nathan, CORN Users' Manual, NUS-TM-34, NUS Corporation, Rockville, MD, April 1981.
3. P. P. Stancavage and E. J. Morgan, Conservative Radiological Accident Evaluation - The CONACO1 Code, NEDO-21143, March 1976.
4. Harold A. Careway and Elbyrne G. Thacker, A Sensitivity Study on Fuel Handling Accidents for Fermi 2, Detroit Edison Company, GE-NE-B13-01920-45, Rev 1, April 1998.
5. NUREG/CR-5009, “Assessment of the Use of Extended Burnup Fuel in Light Water Reactors”, January 1998, Pacific Northwest Laboratory.
6. Safety Evaluation By The Office Of Nuclear Reactor Regulation Related To Amendment No. 87 to Facility Operating License No. NPF-43, Detroit Edison Company Fermi-2, Docket No. 50-341, September 9, 1992.
7. NRC Office of Nuclear Reactor Regulation, "Alternative Radiological Source Terms for Evaluating Design Basis Accidents at Nuclear Power Reactors”, NRC Regulatory Guide 1.183 July 2000.
8. Fermi Design Calculation DC-6086, Volume I "Reanalysis of Fuel Handling Accident Using the Alternate Source Term".
9. “RADTRAD: A Simplified Model for Radionuclide Transport and Removal and Dose Estimation,” NUREG/CR-6604, December 1997.
10. Pacific Northwest National Laboratory, ARCON96 User's Guide, "Atmospheric Dispersion in Building Wakes", NUREG/CR-6331, May 1997.
11. United States Environmental Protection Agency, "Limiting Values of Radionuclide Intake and Air Concentration and Dose Conversion Factors for Inhalation, Submersion, and Ingestion", Federal Guidance Report No. 11, September 1988.
12. United States Environmental Protection Agency, "External Exposure to Radionuclides in Air, Water, and Soil", Federal Guidance Report No. 12, September 1993.
13. General Electric Co., "General Electric Standard Application for Reactor Fuel, GESTAR II," NEDE-24011-P-A, Latest Approved Revision as identified in the COLR.

TABLE 15.7.1-1 TYPICAL SEQUENCE OF EVENTS FOR MAIN TURBINE STEAM AIR EJECTOR LINE FAILURE

Approximate Elapsed Time	Events
0 sec	Event begins. System fails.
0 sec	Noble gases are released.
<1 minute	Area radiation alarms alert plant personnel.
<1 minute	Operator actions begin with (a) Initiation of appropriate system isolations (b) Manual scram actuation (c) Assurance of reactor shutdown cooling.
60 minute	Release to the environment is terminated.

TABLE 15.7.1-2 FAILURE OF MAIN TURBINE STEAM AIR EJECTOR LINES - PARAMETERS TABULATED FOR POSTULATED ACCIDENT ANALYSES

			Assumptions
I.	Data and assumptions used to estimate radioactive source from postulated accidents		
	A.	Power level	3499 MWt
	B.	Burnup	NA
	C.	Fuel damage	None
	D.	Release of activity by nuclide	Table 15.7.1-3
	E.	Iodine fractions	
		(1) Organic	0
		(2) Elemental	1.0
		(3) Particulate	0
	F.	Reactor coolant activity before the accident	Subsection 15.7.1.5
II.	Data and assumptions used to estimate activity released		
	A.	Containment leak rate (percent/day)	NA
	B.	Secondary containment leak rate (percent/day)	NA
	C.	Valve movement times	NA
	D.	Adsorption and filtration efficiencies	NA
		(1) Organic iodine	NA
		(2) Elemental iodine	NA
		(3) Particulate iodine	NA
		(4) Particulate fission products	NA
	E.	Recirculation system parameters	
		(1) Flow rate	NA
		(2) Mixing efficiency	NA
		(3) Filter efficiency	NA
	F.	Containment spray parameters (flow rate, drop size, etc.)	NA
	G.	Containment volumes	NA
	H.	All other pertinent data and assumptions	None
III.	Dispersion data		
	A.	Boundary and LPZ distances (m)	915
	B.	χ/Q's for SB/LPZ	Table 15A-2
IV.	Dose data		
	A.	Peak activity concentrations in containment	NA
	B.	Doses	Table 15.7.1-4

TABLE 15.7.1-3 FAILURE OF MAIN TURBINE STEAM AIR EJECTOR LINES - FISSION PRODUCT RELEASE TO THE ENVIRONMENT

Isotope	Activity Released (Ci)
I-131	3.20(-2)[a]
I-132	2.95(-1)
I-133	2.19(-1)
I-134	5.91(-1)
I-135	3.20(-1)
Kr-83m	4.47(1)
Kr-85	2.63(-1)
Kr-85m	8.03(1)
Kr-87	2.63(2)
Kr-88	2.63(2)
Kr-89	1.67(3)
Xe-131m	1.97(-1)
Xe-133	1.08(2)
Xe-133m	3.81
Xe-135	2.89(2)
Xe-135m	3.41(2)
Xe-137	1.93(3)
Xe-138	1.17(3)

[a] 3.20(-2) = 3.20×10^{-2}.

TABLE 15.7.1-4 FAILURE OF MAIN TURBINE STEAM AIR EJECTOR LINES – RADIOLOGICAL EFFECTS

	Whole-Body Dose (rem)	Thyroid Inhalation Dose (rem)
Exclusion Area (915 m)	3.4(-1)[a]	8.8(-3)
Low-population zone (4827 m)	3.9(-2)	1.0(-3)

[a] 3.4(-1) = 3.4×10^{-1}.

TABLE 15.7.3-1 RADIONUCLIDE INVENTORY USED IN ANALYSIS OF LIQUID AND SOLID RADWASTE SYSTEM FAILURE

	Tanks existed prior to 2005																Pre 2005 Concentration #		Tanks installed in 2005			Post 2005 Concentrations	
	FLR.DRAIN COLLECTOR TANK	EVAP. FD SURGE TANK	WASTE OIL TANK	DISTILLATE SURGE TANK	CHEMICAL WASTE TANK	EVAP. DRAINS TANK	WASTE COLLECTOR TANK	WASTE SAMPLE TANK	COND. PHASE TANK	WASTE CLARIFIER TANK	WASTE SURGE TANK	SPENT RESIN TANK	CHLORIDE WASTE TANK	CONC. FEED TANK	SP. RESIN SLURRY TANK	CENTRIF. FEED TANK			DIST INLET BATCH TANK	POST TREATMENT INLET BATCH TANK	SAMPLE BATCH TANK		
No. of Tanks:	1	1	1	2	1	1	1	3	2	1	1	1	1	1	1	1			1	1	1		
Tank Vol. (gal)	19,900	25,000	1,000	5,100	5,200	1,500	23,400	**	11,800	16,500	65,700	1,400	250	1,500	1,500	6,000			800	800	1000		
Total Vol. (gal)	19,900	25,000	1,000	10,200	5,200	1,500	23,400	69,700	23,600	16,500	65,700	1,400	250	1,500	1,500	6,000			800	800	1,000		
ISOTOPE	ACTIVITY CONC. in uCi/cc	ACTIVITY CONC. in uCi/cc	ACTIVITY CONC. in uCi/cc	ACTIVITY CONC. in uCi/cc	ACTIVITY CONC. in uCi/cc	ACTIVITY CONC. in uCi/cc	ACTIVITY CONC. in uCi/cc	ACTIVITY CONC. in uCi/cc	ACTIVITY CONC. in uCi/cc	ACTIVITY CONC. in uCi/cc	ACTIVITY CONC. in uCi/cc	ACTIVITY CONC. in uCi/cc	ACTIVITY CONC. in uCi/cc	ACTIVITY CONC. in uCi/cc	ACTIVITY CONC. in uCi/cc	ACTIVITY CONC. in uCi/cc	Average Activity Concentration After Assumed Failure, in uCi/cc	Activity Concentration of Released Liquid After Dilution With Groundwater Entering the Radwaste Bldg. in uCi/cc	ACTIVITY CONC uCi/cc	ACTIVITY CONC uCi/cc	ACTIVITY CONC uCi/cc	Average Activity Concentration After Assumed Failure, in uCi/cc	Activity Concentration of Released Liquid After Dilution With Groundwater Entering the Radwaste Bldg., in uCi/cc
Br-83	8.826E-06	3.927E-06	1.706E-03	1.727E-09	1.200E-04	6.416E-06	2.067E-03	7.892E-07	1.200E-05	1.200E-05	1.200E-05	1.200E-05	1.200E-04	6.416E-06	1.200E-05	1.200E-05	1.926E-04	1.926E-04	1.200E-04	1.200E-04	1.200E-04	1.919E-04	1.919E-05
Kr-83m	2.786E-09	3.680E-06	1.071E-05	2.897E-09	0.0	1.730E-05	6.40E-06	3.634E-07	0.0	0.0	0.0	0.0	0.0	1.730E-05	0.0	0.0	1.216E.06	1.216E.06	0.0	0.0	0.0	1.205E-06	1.205E-07
Br-84	1.029E-05	2.668E-07	1.958E-03	6.560E-12	1.400E-04	7.902E-11	2.392E-03	3.333E-07	1.400E-05	1.400E-05	1.400E-05	1.400E-05	1.400E-04	7.902E-11	1.400E-05	1.400E-05	2.223E-04	2.223E-04	1.400E-04	1.400E-04	1.400E-04	2.214E-04	2.214E-05
Br-85	4.362E-06	1.768E-23	6.792E-04	0.0	6.000E-05	0.0	9.225E-04	8.653E-09	6.000E-06	6.000E-06	6.000E-06	6.000E-06	6.000E-05	0.0	6.000E-06	6.000E-06	8.580E-05	8.580E-05	6.000E-05	6.000E-05	6.000E-05	8.551E-05	8.551E-06
Kr-85m	5.646E-10	3.125E-08	1.922E-06	2.016E-11	0.0	1.643E-07	1.224E-06	5.087E-09	0.0	0.0	0.0	0.0	0.0	1.643E-07	0.0	0.0	1.182E-07	1.182E-07	0.0	0.0	0.0	1.171E-07	1.171E-08
Kr-85	5.141E-18	1.644E-13	3.422E-13	2.757E-16	0.0	8.005E-11	1.078E-14	1.481E-14	0.0	0.0	0.0	0.0	0.0	8.005E-11	0.0	0.0	9.028E-13	9.028E-13	0.0	0.0	0.0	8.943E-13	8.943E-14
Rb-89	7.340E-06	3.527E-09	1.366E-03	1.516E-15	1.000E-04	5.873E-18	1.688E-03	1.106E-07	1.000E-05	1.000E-05	1.000E-05	1.000E-05	1.000E-04	5.873E-18	1.000E-05	1.000E-05	1.568E-04	1.568E-04	1.000E-04	1.000E-04	1.000E-04	1.563E-04	1.563E-05
Sr-89	1.471E-07	1.484E-07	2.863E-05	1.482E-10	2.000E-06	2.393E-05	3.454E-05	2.027E-08	2.000E-07	2.000E-07	2.000E-07	2.000E-07	2.000E-06	2.393E-05	2.000E-07	2.000E-07	3.490E-06	3.490E-06	2.000E-06	2.000E-06	2.000E-06	3.476E-06	3.476E-07
Sr-90	1.030E-08	1.030E-08	2.008E-06	1.030E-11	1.400E-07	1.761E-06	2.418E-06	1.441E-09	1.400E-08	1.400E-08	1.400E-08	1.400E-08	1.400E-07	1.761E-06	1.400E-08	1.400E-08	2.453E-07	2.453E-07	1.400E-07	1.400E-07	1.400E-07	2.443E-07	2.443E-08
Y-90	3.302E-13	3.073E-10	7.144E-09	6.085E-13	0.0	1.077E-06	2.215E-10	6.998E-11	0.0	0.0	0.0	0.0	0.0	1.077E-06	0.0	0.0	1.195E-08	1.195E-08	0.0	0.0	0.0	1.184E-08	1.184E-09
Sr-91	5.885E-06	4.801E-06	1.143E-03	3.904E-09	8.000E-05	5.954E-05	1.381E-03	7.132E-07	8.000E-06	8.000E-06	8.000E-06	8.000E-06	8.000E-05	5.954E-05	8.000E-06	8.000E-06	1.295E-04	1.295E-04	8.000E-05	8.000E-05	8.000E-05	1.291E-04	1.291E-05
Y-91m	2.338E-09	2.643E-06	8.975E-06	2.405E-09	0.0	3.717E-05	5.416E-06	2.684E-07	0.0	0.0	0.0	0.0	0.0	3.717E-05	0.0	0.0	1.219E-06	1.219E-06	0.0	0.0	0.0	1.208E-06	1.208E-07
Y-91	5.886E-08	6.455E-08	1.147E-05	7.067E-11	8.000E-07	1.564E-05	1.382E-05	8.526E-09	8.000E-08	8.000E-08	8.000E-08	8.000E-08	8.000E-07	1.564E-05	8.000E-08	8.000E-08	1.464E-06	1.464E-06	8.000E-07	8.000E-07	8.000E-07	1.458E-06	1.458E-07
Sr-92	1.471E-05	7.202E-06	2.847E-03	3.489E-09	2.000E-04	1.575E-05	3.446E-03	1.378E-06	2.000E-05	2.000E-05	2.000E-05	2.000E-05	2.000E-04	1.575E-05	2.000E-05	2.000E-05	3.212E-04	3.212E-04	2.000E-04	2.000E-04	2.000E-04	3.201E-04	3.201E-05
Y-92	8.829E-06	9.398E-06	1.718E-03	7.506E-09	1.200E-04	6.895E-05	2.074E-03	1.280E-06	1.200E-05	1.200E-05	1.200E-05	1.200E-05	1.200E-04	6.895E-05	1.200E-05	1.200E-05	1.946E-04	1.946E-04	1.200E-04	1.200E-04	1.200E-04	1.938E-04	1.938E-05
Y-93	5.885E-06	4.868E-06	1.143E-03	4.015E-09	8.000E-05	6.472E-05	1.381E-03	7.184E-07	8.000E-06	8.000E-06	8.000E-06	8.000E-06	8.000E-05	6.472E-05	8.000E-06	8.000E-06	1.296E-04	1.296E-04	8.000E-05	8.000E-05	8.000E-05	1.291E-04	1.291E-05
Zr-95	1.175E-08	1.173E-10	2.359E-08	1.171E-14	1.600E-07	1.917E-08	2.744E-06	1.640E-10	1.600E-08	1.600E-08	1.600E-08	1.600E-08	1.600E-07	1.917E-08	1.600E-08	1.600E-08	2.469E-07	2.469E-07	1.600E-07	1.600E-07	1.600E-07	2.461E-07	2.461E-08
Nb-95m	7.888E-14	2.558E-12	9.106E-10	5.092E-16	0.0	1.000E-08	1.788E-10	8.202E-12	0.0	0.0	0.0	0.0	0.0	1.000E-08	0.0	0.0	1.312E-10	1.312E-10	0.0	0.0	0.0	6.819E-09	6.819E-10
Nb-95	1.175E-08	1.172E-10	2.407E-08	1.169E-14	1.600E-07	1.909E-08	2.744E-06	1.672E-10	1.600E-08	1.600E-08	1.600E-08	1.600E-08	1.600E-07	1.909E-08	1.600E-08	1.600E-08	2.469E-07	2.469E-07	1.600E-07	1.600E-07	1.600E-07	2.461E-07	2.461E-08
Zr-97	8.812E-09	7.858E-11	1.701E-08	6.996E-15	1.200E-07	1.686E-09	2.057E-06	1.113E-10	1.200E-08	1.200E-08	1.200E-08	1.200E-08	1.200E-07	1.686E-09	1.200E-08	1.200E-08	1.850E-07	1.850E-07	1.200E-07	1.200E-07	1.200E-07	1.843E-07	1.843E-08
Nb-97	4.240E-12	6.570E-11	1.641E-10	7.163E-15	0.0	1.812E-09	9.787E-09	6.038E-11	0.0	0.0	0.0	0.0	0.0	1.812E-09	0.0	0.0	8.832E-10	8.832E-10	0.0	0.0	0.0	7.564E-09	7.564E-10
Nb-98	5.871E-06	6.022E-09	1.120E-05	5.974E-14	8.000E-05	1.152E-10	1.363E-03	2.870E-08	8.000E-06	8.000E-06	8.000E-06	8.000E-06	8.000E-05	1.152E-10	8.000E-06	8.000E-06	1.226E-04	1.226E-04	8.000E-05	8.000E-05	8.000E-05	1.222E-04	1.222E-05
Mo-99	2.937E-06	2.652E-08	5.679E-06	2.768E-12	4.000E-05	1.998E-06	6.860E-04	3.888E-08	4.000E-06	4.000E-06	4.000E-06	4.000E-06	4.000E-05	1.998E-06	4.000E-06	4.000E-06	6.170E-05	6.170E-05	4.000E-05	4.000E-05	4.000E-05	6.149E-05	6.149E-06
Tc-99m	2.943E-05	2.134E-05	5.707E-03	1.540E-08	4.000E-04	1.651E-04	6.901E-03	3.358E-06	4.000E-05	4.000E-05	4.000E-05	4.000E-05	4.000E-04	1.651E-04	4.000E-05	4.000E-05	6.455E-04	6.455E-04	4.000E-04	4.000E-04	4.000E-04	6.432E-04	6.432E-05
Tc-101	1.321E-04	3.925E-08	2.452E-02	1.035E-14	1.800E-03	1.522E-17	3.035E-02	1.864E-06	1.800E-04	1.800E-04	1.800E-04	1.800E-04	1.800E-03	1.522E-17	1.800E-04	1.800E-04	2.820E-03	2.820E-03	1.800E-03	1.800E-03	1.800E-03	2.810E-03	2.810E-04
Ru-103	2.937E-08	2.931E-10	5.815E-08	2.925E-14	4.000E-07	4.653E-08	6.860E-06	4.040E-10	4.000E-08	4.000E-08	4.000E-08	4.00E-08	4.000E-07	4.653E-08	4.000E-08	4.000E-08	6.173E-07	6.173E-07	4.000E-07	4.000E-07	4.000E-07	6.152E-07	6.152E-08
Tc-104	1.175E-04	1.853E-07	2.201E-02	2.660E-13	1.600E-03	1132E-14	2.711E-02	2.125E-06	1.600E-04	1.600E-04	1.600E-04	1.600E-03	1.600E-03	1.132E-14	1.600E-04	1.600E-04	2.519E-03	2.519E-03	1.600E-03	1.600E-03	1.600E-03	2.510E-03	2.510E-04
Ru-105	2.937E-06	1.899E-08	5.660E-08	1.220E-12	4.000E-05	9.869E-08	6.851E-04	3.135E-08	4.000E-06	4.000E-06	4.000E-06E	4.000E-06	4.000E-05	9.869E.08	4.000E-06	4.000E-06	6.159E-05	6.159E-05	4.000E-05	4.000E-05	4.000E-05	6.139E-05	6.139E-06
Ru-106	4.407E-09	4.411E-11	9.282E-09	4.408E-15	6.000E-08	7.547E-09	1.029E-06	6.455E-11	6.000E-09	6.000E-09	6.000E-09	6.000E-09	6.000E-08	7.547E-09	6.000E-09	6.000E-09	9.260E-08	9.260E-08	6.000E-08	6.000E-08	6.000E-08	9.229E-08	9.229E-09
Rh-106	2.947E-10	4.411E-11	6.795E-09	4.408E-15	0.0	7.547E-09	4.715E-07	6.454E-11	0.0	0.0	0.0	0.0	0.0	7.547E-09	0.0	0.0	4.066E-08	4.066E-08	0.0	0.0	0.0	4.028E-08	4.028E-09
Te-129m	5.886E-08	5.872E-08	1.144E-05	5.895E-11	8.000E-07	9.237E-06	1.381E-05	7.999E-09	8.000E-08	8.000E-08	8.000E-08	8.000E-08	8.000E-07	9.237E-06	8.000E-08	8.000E-08	1.392E-06	1.392E-06	8.000E-07	8.000E-07	8.000E-07	1.386E-06	1.386E-07
Te-129	1.862E-11	3.015E-08	7.653E-08	3.571E-11	0.0	5.827E-06	4.319E-08	2.771E-09	0.0	0.0	0.0	0.0	0.0	5.827E-06	0.0	0.0	7.166E-08	7.166E-08	0.0	0.0	0.0	7.098E-08	7.098E-09
I-129	4.827E-15	1.970E-13	3.157E-13	7.163E-17	0.0	2.922E-11	1.113E-13	2.919E-16	0.0	0.0	0.0	0.0	0.0	2.922E-11	0.0	0.0	3.511E-13	3.511E-13	0.0	0.0	0.0	3.478E-13	3.478E-14
Te-131m	1.471E-07	1.379E-07	2.857E-05	1.292E-10	2.000E-06	5.029E-06	3.453E-05	1.921E-08	2.000E-07	2.000E-07	2.000E-07	2.000E-07	2.000E-06	5.029E-06	2.000E-07	2.000E-07	3.280E-06	3.280E-06	2.000E-06	2.000E-06	2.000E-06	3.268E-06	3.268E-07
I-131	5.444E-06	5.391E-06	1.058E-03	5.338E-09	7.400E-05	6.517E-04	1.278E-03	7.326E-07	7.400E-06	7.400E-06	7.400E-06	7.400E-06	7.400E-05	6.517E-04	7.400E-06	7.400E-06	1.265E-04	1.265E-04	7.400E-05	7.400E-05	7.400E-05	1.260E-04	1.260E-05
Te-131	4.483E-11	3.046E-08	1.708E-07	2.881E-11	0.0	1.122E-06	1.034E-07	3.449E-09	0.0	0.0	0.0	0.0	0.0	1.122E-06	0.0	0.0	2.555E-08	2.555E-08	0.0	0.0	0.0	2.531E-08	2.531E-09
Te-132	1.471E-08	1.435E-08	2.858E-06	1.399E-11	2.000E-07	1.124E-06	3.453E-06	1.962E-09	2.000E-08	2.000E-08	2.000E-08	2.000E-08	2.000E-07	1.124E-06	2.000E-08	2.000E-08	3.349E-07	3.349E-07	2.000E-07	2.000E-07	2.000E-07	3.336E-07	3.336E-08
I-132	8.826E-05	3.777E-05	1.706E-02	1.597E-08	1.200E-03	5.594E-05	2.067E-02	7.752E-06	1.200E-04	1.200E-04	1.200E-04	1.200E-04	1.200E-03	5.594E-05	1.200E-04	1.200E-04	1.926E-03	1.926E-03	1.200E-03	1.200E-03	1.200E-03	1.919E-03	1.919E-04
I-134	1.470E-04	1.576E-05	2.821E-02	1.635E-09	2.000E-03	3.440E-07	3.431E-02	7.345E-06	2.000E-04	2.000E-04	2.000E-04	2.000E-04	2.000E-03	3.440E-07	2.000E-04	2.000E-04	3.190E-03	3.190E-03	2.000E-03	2.000E-03	2.000E-03	3.179E-03	3.179E-04
I-133	7.357E-05	6.706E-05	1.428E-02	6.105E-08	1.000E-03	1.752E-03	1.726E-02	9.453E-06	1.000E-04	1.000E-04	1.000E-04	1.000E-04	1.000E-03	1.752E-03	1.000E-04	1.000E-04	1.631E-03	1.631E-03	1.000E-03	1.000E-03	1.000E-03	1.625E-03	1.625E-04
Xe-133m	2.345E-11	7.366E-08	9.174E-08	1.390E-10	0.0	4.657E-05	5.453E-08	5.569E-09	0.0	0.0	0.0	0.0	0.0	4.657E-05	0.0	0.0	5.262E-07	5.262E-07	0.0	0.0	0.0	5.212E-07	5.212E-08
Xe-133	3.276E-10	1.041E-06	1.315E-06	1.988E-09	0.0	1.111E-03	7.618E-07	7.867E-08	0.0	0.0	0.0	0.0	0.0	1.111E-03	0.0	0.0	1.242E-05	1.242E-05	0.0	0.0	0.0	1.231E-05	1.231E-06
I-135	7.357E-05	6.706E-05	1.428E-02	6.105E-08	1.000E-03	1.752E-03	1.726E-02	9.453E-06	1.000E-04	1.000E-04	1.000E-04	1.000E-04	1.000E-03	1.752E-03	1.000E-04	1.000E-04	1.631E-03	1.631E-03	1.000E-03	1.000E-03	1.000E-03	1.625E-03	1.625E-04
Xe-135m	3.117E-08	1.296E-05	1.177E-04	1.181E-08	0.0	3.389E-04	7.157E-05	1.608E-06	0.0	0.0	0.0	0.0	0.0	3.389E-04	0.0	0.0	1.192E-05	1.192E-05	0.0	0.0	0.0	1.181E-05	1.181E-06
Xe-135	3.779E-09	1.315E-05	1.471E-05	2.303E-08	0.0	1.853E-03	8.815E-06	9.992E-07	0.0	0.0	0.0	0.0	0.0	1.853E-03	0.0	0.0	2.269E-05	2.269E-05	0.0	0.0	0.0	2.247E-05	2.247E-06
Cs-135	1.393E-13	1.552E-12	5.920E-12	5.982E-16	0.0	1.449E-10	3.275E-12	4.762E-15	0.0	0.0	0.0	0.0	0.0	1.449E-10	0.0	0.0	2.053E-12	2.053E-12	0.0	0.0	0.0	2.034E-12	2.034E-13
Cs-134	4.414E-08	4.414E-08	8.603E-06	4.414E-11	6.000E-07	7.519E-06	1.036E-05	6.155E-09	6.000E-08	6.000E-08	6.000E-08	6.000E-08	6.000E-07	7.519E-06	6.000E-08	6.000E-08	1.051E-06	1.051E-06	6.000E-07	6.000E-07	6.000E-07	1.046E-06	1.046E-07
Cs-136	2.943E-08	2.925E-08	5.718E-06	2.907E-11	4.000E-07	4.011E-06	6.907E-06	3.369E-09	4.000E-08	4.000E-08	4.000E-08	4.000E-08	4.000E-07	4.011E-06	4.000E-08	4.000E-08	6.893E-07	6.893E-07	4.000E-07	4.000E-07	4.000E-07	6.866E-07	6.866E-08
Cs-137	1.177E-07	1.177E-07	2.295E-05	1.177E-10	1.600E-06	2.013E-05	2.763E-05	1.646E-08	1.600E-07	1.600E-07	1.600E-07	1.600E-07	1.600E-06	2.013E-05	1.600E-07	1.600E-07	2.803E-06	2.803E-06	1.600E-06	1.600E-06	1.600E-06	2.792E-06	2.792E-07
Ba-137m	1.502E-09	1.114E-07	5.100E-06	1.113E-10	0.0	1.904E-05	3.224E-06	1.539E-08	0.0	0.0	0.0	0.0	0.0	1.904E-05	0.0	0.0	5.197E-07	5.197E-07	0.0	0.0	0.0	5.148E-07	5.148E-08
Cs-138	1.470E-05	3.989E-07	2.799E-03	1.027E-11	2.000E-04	1.355E-10	3.417E-03	4.818E-07	2.000E-05	2.000E-05	2.000E-05	2.000E-05	2.000E-04	1.355E-10	2.000E-05	2.000E-05	3.175E-04	3.175E-04	2.000E-04	2.000E-04	2.000E-04	3.164E-04	3.164E-05
Ba-139	1.471E-05	3.624E-06	2.835E-03	8.746E-10	2.000E-04	9.861E-07	3.439E-03	1.011E-06	2.000E-05	2.000E-05	2.000E-05	2.000E-05	2.000E-04	9.861E-07	2.000E-05	2.000E-05	3.200E-04	3.200E-04	2.000E-04	2.000E-04	2.000E-04	3.189E-04	3.189E-05

TABLE 15.7.3-1 RADIONUCLIDE INVENTORY USED IN ANALYSIS OF LIQUID AND SOLID RADWASTE SYSTEM FAILURE

	Tanks existed prior to 2005																Pre 2005 Concentration #		Tanks installed in 2005			Post 2005 Concentrations	
	FLR.DRAIN COLLECTOR TANK	EVAP. FD SURGE TANK	WASTE OIL TANK	DISTILLATE SURGE TANK	CHEMICAL WASTE TANK	EVAP. DRAINS TANK	WASTE COLLECTOR TANK	WASTE SAMPLE TANK	COND. PHASE TANK	WASTE CLARIFIER TANK	WASTE SURGE TANK	SPENT RESIN TANK	CHLORIDE WASTE TANK	CONC. FEED TANK	SP. RESIN SLURRY TANK	CENTRIF. FEED TANK			DIST INLET BATCH TANK	POST TREATMENT INLET BATCH TANK	SAMPLE BATCH TANK		
No. of Tanks:	1	1	1	2	1	1	1	3	2	1	1	1	1	1	1	1			1	1	1		
Tank Vol. (gal)	19,900	25,000	1,000	5,100	5,200	1,500	23,400	**	11,800	16,500	65,700	1,400	250	1,500	1,500	6,000			800	800	1000		
Total Vol. (gal)	19,900	25,000	1,000	10,200	5,200	1,500	23,400	69,700	23,600	16,500	65,700	1,400	250	1,500	1,500	6,000			800	800	1,000		
ISOTOPE	ACTIVITY CONC. in uCi/cc	ACTIVITY CONC. in uCi/cc	ACTIVITY CONC. in uCi/cc	ACTIVITY CONC. in uCi/cc	ACTIVITY CONC. in uCi/cc	ACTIVITY CONC. in uCi/cc	ACTIVITY CONC. in uCi/cc	ACTIVITY CONC. in uCi/cc	ACTIVITY CONC. in uCi/cc	ACTIVITY CONC. in uCi/cc	ACTIVITY CONC. in uCi/cc	ACTIVITY CONC. in uCi/cc	ACTIVITY CONC. in uCi/cc	ACTIVITY CONC. in uCi/cc	ACTIVITY CONC. in uCi/cc	ACTIVITY CONC. in uCi/cc	Average Activity Concentration After Assumed Failure, in uCi/cc	Activity Concentration of Released Liquid After Dilution With Groundwater Entering the Radwaste Bldg. in uCi/cc	ACTIVITY CONC uCi/cc	ACTIVITY CONC uCi/cc	ACTIVITY CONC uCi/cc	Average Activity Concentration After Assumed Failure, in uCi/cc	Activity Concentration of Released Liquid After Dilution With Groundwater Entering the Radwaste Bldg., in uCi/cc
Ba-140	5.886E-07	5.849E-07	1.143E-04	5.812E-10	8.000E-06	7.980E-05	1.381E-04	7.934E-08	8.000E-07	8.000E-07	8.000E-07	8.000E-07	8.000E-06	7.980E-05	8.000E-07	8.000E-07	1.378E-05	1.378E-05	8.000E-06	8.000E-06	8.000E-06	1.372E-05	1.372E-06
La-140	8.453E-12	2.751E-08	4.299E-08	5.394E-11	0.0	6.125E-05	1.963E-08	2.129E-09	0.0	0.0	0.0	0.0	0.0	6.125E-05	0.0	0.0	6.796E-07	6.796E-07	0.0	0.0	0.0	6.732E-07	6.732E-08
Ba-141	1.469E-05	2.486E-08	2.752E-03	3.835E-14	2.000E-04	1.883E-15	3.389E-03	2.688E-07	2.000E-05	2.000E-05	2.000E-05	2.000E-05	2.000E-04	1.883E-15	2.000E-05	2.000E-05	3.149E-04	3.149E-04	2.000E-04	2.000E-04	2.000E-04	3.138E-04	3.138E-05
La-141	2.176E-09	7.533E-07	8.232E-06	4.565E-10	0.0	3.235E-06	5.002E-06	1.066E-07	0.0	0.0	0.0	0.0	0.0	3.235E-06	0.0	0.0	5.922E-07	5.922E-07	0.0	0.0	0.0	5.866E-07	5.866E-08
Ce-141	4.406E-08	2.384E-09	8.701E-08	1.729E-12	6.000E-07	9.490E-07	1.029E-05	7.413E-10	6.000E-08	6.000E-08	6.000E-08	6.000E-08	6.000E-07	9.490E-07	6.000E-08	6.000E-08	9.358E-07	9.358E-07	6.000E-07	6.000E-07	6.000E-07	9.326E-07	9.326E-08
Ba-142	8.800E-06	1.535E-10	1.608E-03	2.282E-18	1.200E-04	1.104E-23	2.006E-03	8.910E-08	1.200E-05	1.200E-05	1.200E-05	1.200E-05	1.200E-04	1.104E-23	1.200E-05	1.200E-05	1.864E-04	1.864E-04	1.200E-04	1.200E-04	1.200E-04	1.857E-04	1.857E-05
La-142	7.344E-06	3.458E-07	1.420E-05	9.745E-12	1.000E-04	1.493E-07	1.716E-03	1.610E-07	1.000E-05	1.000E-05	1.000E-05	1.000E-05	1.000E-04	1.493E-07	1.000E-05	1.000E-05	1.543E-04	1.543E-04	1.000E-04	1.000E-04	1.000E-04	1.538E-04	1.538E-05
Ce-143	4.406E-08	4.155E-10	8.513E-08	3.915E-14	6.000E-07	1.653E-08	1.029E-05	5.736E-10	6.000E-08	6.000E-08	6.000E-08	6.000E-08	6.000E-07	1.653E-08	6.000E-08	6.000E-08	9.253E-07	9.253E-07	6.000E-07	6.000E-07	6.000E-07	9.222E-07	9.222E-08
Pr-143	5.875E-08	5.865E-10	1.142E-07	5.854E-14	8.000E-08	8.571E-08	1.372E-05	7.935E-10	8.000E-08	8.000E-08	8.000E-08	8.000E-08	8.000E-08	8.571E-08	8.000E-08	8.000E-08	1.234E-06	1.234E-06	8.000E-08	8.000E-08	8.000E-08	1.230E-06	1.230E-07
Ce-144	4.406E-09	4.405E-11	9.144E-09	4.404E-15	6.000E-08	7.462E-09	1.029E-06	6.359E-11	6.000E-09	6.000E-09	6.000E-09	6.000E-09	6.000E-08	7.462E-09	6.000E-09	6.000E-09	9.260E-08	9.260E-08	6.000E-08	6.000E-08	6.000E-08	9.229E-08	9.229E-09
Pr-144	8.817E-12	4.400E-11	9.641E-10	4.404E-15	0.0	7.462E-09	2.017E-08	5.601E-11	0.0	0.0	0.0	0.0	0.0	7.462E-09	0.0	0.0	1.838E-09	1.838E-09	0.0	0.0	0.0	1.820E-09	1.820E-10
Nd-147	4.406E-09	4.374E-11	8.548E-09	4.342E-15	6.000E-08	5.768E09	1.029E-06	5.921E-11	6.000E-09	6.000E-09	6.000E-09	6.000E-09	6.000E-08	5.768E09	6.000E-09	6.000E-09	9.257E-08	9.257E-08	6.000E-08	6.000E-08	6.000E-08	9.227E-08	9.227E-09
Np-239	1.177E-05	1.137E-05	2.287E-03	1.098E-08	0.0	7.088E-04	2.763E-03	1.562E-06	0.0	0.0	0.0	0.0	0.0	7.088E-04	0.0	0.0	2.559E-04	2.559E-04	0.0	0.0	0.0	2.535E-04	2.535E-05
Na-24	1.471E-05	1.294E-05	2.257E-03	1.135E-08	2.000E-04	2.485E-04	3.452E-03	1.856E-06	2.000E-05	2.000E-05	2.000E-05	2.000E-05	2.000E-04	2.485E-04	2.000E-05	2.000E-05	3.250E-04	3.250E-04	2.000E-04	2.000E-04	2.000E-04	3.238E-04	3.238E-05
P-32	2.943E-07	2.926E-07	5.718E-05	2.909E-10	4.000E-06	4.084E-05	6.907E-05	3.971E-08	4.000E-07	4.000E-07	4.000E-07	4.000E-07	4.000E-06	4.084E-05	4.000E-07	4.000E-07	6.901E-06	6.901E-06	4.000E-06	4.000E-06	4.000E-06	6.874E-06	6.874E-07
Cr-51	8.812E-06	8.786E-08	1.729E-05	8.760E-12	1.200E-04	1.352E-05	2.058E-03	1.201E-07	1.200E-07	1.200E-07	1.200E-07	1.200E-07	1.200E-04	1.352E-05	1.200E-07	1.200E-07	1.852E-04	1.852E-04	1.200E-04	1.200E-04	1.200E-04	1.846E-04	1.846E-05
Mn-54	1.028E-07	1.028E-09	2.136E-07	1.028E-13	1.400E-06	1.743E-07	2.401E-05	1.485E-09	1.400E-07	1.400E-07	1.400E-07	1.400E-07	1.400E-06	1.743E-07	1.400E-07	1.400E-07	2.161E-06	2.161E-06	1.400E-06	1.400E-06	1.400E-06	2.153E-06	2.153E-07
Fe-55	1.469E-06	1.469E-08	3.079E-06	1.469E-12	2.000E-05	2.507E-06	3.430E-04	2.141E-08	2.000E-06	2.000E-06	2.000E-06	2.000E-06	2.000E-05	2.507E-06	2.000E-06	2.000E-06	3.087E-05	3.087E-05	2.000E-05	2.000E-05	2.000E-05	3.076E-05	3.076E-06
Mn-56	7.342E-05	3.465E-07	1.412E-04	1.618E-11	1.000E-03	6.784E-07	1.711E-02	6.712E-07	1.000E-04	1.000E-04	1.000E-04	1.000E-04	1.000E-03	6.784E-07	1.000E-04	1.000E-04	1.538E-03	1.538E-03	1.000E-03	1.000E-03	1.000E-03	1.533E-03	1.533E-04
Co-58	2.937E-07	2.934E-09	5.915E-07	2.931E-13	4.000E-06	4.815E-07	6.860E-05	4.111E-09	4.000E-07	4.000E-07	4.000E-07	4.000E-07	4.000E-06	4.815E-07	4.000E-07	4.000E-07	6.173E-06	6.173E-06	4.000E-06	4.000E-06	4.000E-06	6.152E-06	6.152E-07
Fe-59	4.406E-08	4.398E-10	8.752E-08	4.390E-14	1.000E-06	7.043E-08	1.029E-05	6.081E-10	1.000E-07	1.000E-07	1.000E-07	1.000E-07	1.000E-06	7.043E-08	1.000E-07	1.000E-07	9.507E-07	9.507E-07	1.000E-06	1.000E-06	1.000E-06	9.512E-07	9.512E-08
Co-60	5.875E-07	5.874E-09	1.235E-06	5.874E-13	8.000E-06	1.004E-06	1.372E-04	8.589E-09	8.000E-07	8.000E-07	8.000E-07	8.000E-07	8.000E-06	1.004E-06	8.000E-07	8.000E-07	1.235E-05	1.235E-05	8.000E-06	8.000E-06	8.000E-06	1.231E-05	1.231E-06
Ni-63	1.469E-09	1.469E-11	3.094E-09	1.469E-15	2.000E-08	2.515E-09	3.430E-07	2.151E-11	2.000E-09	2.000E-09	2.000E-09	2.000E-09	2.000E-08	2.515E-09	2.000E-09	2.000E-09	3.087E-08	3.087E-08	2.000E-08	2.000E-08	2.000E-08	3.076E-08	3.076E-09
Cu-64	4.406E-05	3.788E-07	8.509E-05	3.249E-11	6.000E-04	6.264E-06	1.029E-02	5.457E-07	6.000E-05	6.000E-05	6.000E-05	6.000E-05	6.000E-04	6.264E-06	6.000E-05	6.000E-05	9.252E-04	9.252E-04	6.000E-04	6.000E-04	6.000E-04	9.221E-04	9.221E-05
Ni-65	4.405E-07	2.044E-09	8.477E-07	9.374E-14	6.000E-06	3.794E-09	1.027E-04	3.996E-09	6.000E-07	6.000E-07	6.000E-07	6.000E-07	6.000E-06	3.794E-09	6.000E-07	6.000E-07	9.233E-06	9.233E-06	6.000E-06	6.000E-06	6.000E-06	9.203E-06	9.203E-07
Zn-65	2.943E-07	2.942E-07	5.733E-05	2.941E-10	4.000E-06	4.971E-05	6.907E-05	4.084E-08	4.000E-07	4.000E-07	4.000E-07	4.000E-07	4.000E-06	4.971E-05	4.000E-07	4.000E-07	7.000E-06	7.000E-06	4.000E-06	4.000E-06	4.000E-06	6.972E-06	6.972E-07
Zn-69	2.941E-06	3.834E-07	5.649E-04	4.851E-11	4.000E-05	1.516E-08	6.866E-04	1.576E-07	4.000E-06	4.000E-06	4.000E-06	4.000E-06	4.000E-05	1.516E-08	4.000E-06	4.000E-06	6.384E-05	6.384E-05	4.000E-05	4.000E-05	4.000E-05	6.362E-05	6.362E-06
Zn-69m	0.0	0.0	2.818E-17	0.0	0.0	0.0	0.0	1.820E-19	0.0	0.0	0.0	0.0	0.0	0.0	0.0	0.0	1.500E-19	1.500E-19	0.0	0.0	0.0	1.486E-19	1.486E-20
Ag-110m	1.469E-09	1.468E-11	3.043E-09	1.468E-15	2.000E-08	2.483E-09	3.430E-07	2.116E-11	2.000E-09	2.000E-09	2.000E-09	2.000E-09	2.000E-08	2.483E-09	2.000E-09	2.000E-09	3.087E-08	3.087E-08	2.000E-08	2.000E-08	2.000E-08	3.076E-08	3.076E-09
W-187	4.406E-07	4.063E-09	8.511E-07	3.742E-13	6.000E-06	1.204E-07	1.029E-04	5.666E-09	6.000E-07	6.000E-07	6.000E-07	6.000E-07	6.000E-06	1.204E-07	6.000E-07	6.000E-07	9.252E-06	9.252E-06	6.000E-06	6.000E-06	6.000E-06	9.222E-06	9.222E-07
H-3	1.000E-02	1.000E-02	1.000E-02	1.000E-02	2.000E-04	1.000E-02	1.000E-02	1.000E-02	2.000E-05	2.000E-05	2.000E-05	2.000E-05	2.000E-04	1.000E-02	2.000E-05	2.000E-05	5.601E-03	5.601E-03	2.000E-04	2.000E-04	2.000E-04	5.550E-03	5.550E-04

TOTAL CURIES OF IODINE IN THE SPILLED LIQUID:

I-129 = 3.619E-10
I-131 = 1.304E-01
I-132 = 1.985E+00
I-133 = 1.681E+00
I-134 = 3.288E+00
I-135 = 1.681E+00

TOTAL CURIES OF IODINE ASSUMED TO BE RELEASED TO THE ATMOSPHERE:

I-129 = 3.619E-12
I-131 = 1.304E-03
I-132 = 1.985E-02
I-133 = 1.681E-02
I-134 = 3.288E-02
I-135 = 1.681E-02

* Tank is not considered operational per Note in UFSAR Section 11.2.1.

** Two of the Waste Sample Tanks have volume of 24,300 gallons, and the third has volume of 21,100 gallons.

Pre-2005 values are more limiting than Post 2005 values. For conservatism, Pre-2005 values are continued to be used in dose calculations. As such, the dose calculation for liquid tank failure analysis remains unchanged.

TABLE 15.7.3-2 CALCULATION OF REACTOR COOLANT ACTIVITY DURING NORMAL PLANT OPERATION*

	Reactor Coolant Specific Activity (μCi/cc)	
Isotope	Soluble	Insoluble
Br-83	6.1E-03	
Br-84	7.1E-03	
Br-85	3.1E-03	
Rb-89	5.1E-03	
Sr-89	1.0E-04	
Sr-90	7.1E-06	
Sr-91	4.1E-03	
Sr-92	1.0E-02	
Y-91	4.1E-05	
Y-92	6.1E-03	
Y-93	4.1E-03	
Nb-95		8.2E-06
Nb-98		4.1E-03
Zr-95		8.2E-06
Zr-97		6.1E-06
Mo-99		2.0E-03
Tc-99m	2.0E-02	
Tc-101	9.2E-02	
Tc-104	8.2E-02	
Ru-103		2.0E-05
Ru-105		2.0E-03
Ru-106		3.1E-06
Te-129m	4.1E-05	
Te-131m	1.0E-04	
Te-132	1.0E-05	
I-131	3.8E-03	
I-132	6.1E-02	
I-133	5.1E-02	
I-134	1.0E-01	
I-135	5.1E-02	
Cs-134	3.1E-05	
Cs-136	2.0E-05	
Cs-137	8.2E-05	

TABLE 15.7.3-2 CALCULATION OF REACTOR COOLANT ACTIVITY DURING NORMAL PLANT OPERATION*

	Reactor Coolant Specific Activity (µCi/cc)	
Isotope	Soluble	Insoluble
Cs-138	1.0E-02	
Ba-139	1.0E-02	
Ba-140	4.1E-04	
Ba-141	1.0E-02	
Ba-142	6.1E-03	
La-142		5.1E-03
Ce-141		3.1E-05
Ce-143		3.1E-05
Ce-144		3.1E-06
Pr-143		4.1E-05
Nd-147		3.1E-06
Np-239	8.2E-03	
Na-24	1.0E-02	
P-32	2.0E-04	
Cr-51		6.1E-03
Mn-54		7.1E-05
Mn-56		5.1E-02
Fe-55		1.0E-03
Fe-59		2.0E-05
Co-58		2.0E-04
Co-60		4.1E-04
Ni-63		1.0E-06
Ni-65		3.1E-04
Cu-64		3.1E-02
Zn-65	2.0E-04	
Zn-69	2.0E-03	
Ag-110m		1.0E-06
W-187		3.1E-04
H-3	1.0E-02	
	0.577	0.103
Total	0.681	

* 3499 MWt

TABLE 15.7.3-3 FRACTIONS OF PRIMARY COOLANT ACTIVITY DURING NORMAL PLANT OPERATION FOR RADWASTE SOURCE

Source	Fraction
Equipment drains	
Drywell	1.00
Reactor building	0.1
Radwaste building	0.1
Turbine building	0.001
Floor drains	
Drywell	0.001
Reactor building	0.001
Radwaste building	0.001
Turbine building	0.001
Lab drains, chemical waste	0.02
Cleanup phase separator decantation	0.002
Condensate phase separator decantation[a]	2×10^{-6}

[a] Assumed to be equal to condensate demineralizer backwash water.

TABLE 15.7.3-4 DESIGN-BASIS DECONTAMINATION FACTORS FOR RADWASTE EQUIPMENT

Equipment	Soluble Isotopes	Insoluble Isotopes
Etched-disk filter	1	10
Precoat filter	1	10
Oil coalescers (3 in series)	1	10
Radwaste demineralizer[a]	100(10)	10(10)
Radwaste evaporator	1,000	10,000
Extruder/evaporator	1,000	1,000
Centrifuge	67	67
Phase separators[b] (sludge effluent)	1	1
Reactor water cleanup condensate filter-demineralizers	100	100

[a] Values in parentheses are for the second demineralizer in series.

[b] All activity entering the phase separators has been assumed to exit via the sludge letdown line.

TABLE 15.7.3-5 SUMMARY OF RADIONUCLIDE CONCENTRATION AT VARIOUS POINTS IN THE LIQUID PATHWAY TO THE CITY OF MONROE POTABLE WATER INTAKE

		Concentration (μCi/cm^3)		
Nuclide	Half-Life (days)	In Tanks	Entering Lake	At Intake
Br-83	1.00E-01	1.97E-04	0.00E-01	0.00E-01
Kr-83m	7.92E-02	1.24E-06	0.00E-01	0.00E-01
Br-84	2.21E-02	2.26E-04	0.00E-01	0.00E-01
Br-85	2.08E-03	8.75E-05	0.00E-01	0.00E-01
Kr-85m	1.82E-01	1.20E-07	0.00E-01	0.00E-01
Kr-85	3.95E-03	9.21E-13	0.00E-01	0.00E-01
Rb-89	1.07E-02	1.60E-04	0.00E-01	0.00E-01
Sr-89	5.08E+01	3.56E-06	6.14E-19	7.98E-21
Sr-90	1.05E+04	2.50E-07	2.19E-08	2.85E-10
Y-90	2.68E+00	1.21E-08	0.00E-01	0.00E-01
Sr-91	4.03E-01	1.32E-04	0.00E-01	0.00E-01
Y-91m	3.49E-02	1.24E-06	0.00E-01	0.00E-01
Y-91	5.90E+01	1.49E-06	1.11E-17	1.45E-19
Sr-92	1.12E-01	3.27E-04	0.00E-01	0.00E-01
Y-92	1.50E-01	1.99E-04	0.00E-01	0.00E-01
Y-93	4.33E-01	1.33E-04	0.00E-01	0.00E-01
Zr-95	6.55E+01	2.52E-07	1.90E-17	2.46E-19
Nb-95m	3.75E+00	1.34E-10	0.00E-01	0.00E-01
Nb-95	3.51E+01	2.52E-07	2.38E-25	3.09E-27
Zr-97	7.00E-01	1.89E-07	0.00E-01	0.00E-01
Nb-97	5.01E-02	9.01E-10	0.00E-01	0.00E-01
Nb-98	3.54E-02	1.25E-04	0.00E-01	0.00E-01
Mo-99	2.78E+00	6.29E-05	0.00E-01	0.00E-01
Tc-99m	2.58E-01	6.58E-04	0.00E-01	0.00E-01
Tc-101	9.86E-03	2.88E-03	0.00E-01	0.00E-01
Ru-103	3.98E+01	6.29E-07	6.09E-23	7.92E-25
Tc-104	1.25E-02	2.57E-03	0.00E-01	0.00E-01
Ru-105	1.88E-01	6.28E-05	0.00E-01	0.00E-01
Ru-106	3.68E+02	9.45E-08	2.24E-10	2.92E-12
Rh-106	3.47E-04	4.15E-08	0.00E-01	0.00E-01
Te-129m	3.41E+01	1.42E-06	4.25E-25	5.52E-27
Te-129	5.00E-02	7.31E-08	0.00E-01	0.00E-01
I-129	5.73E+09	3.58E-13	3.58E-14	4.65E-16
Te-131m	1.25E+00	3.35E-06	0.00E-01	0.00E-01
I-131	8.07E+00	1.29E-04	0.00E-01	0.00E-01
Te-131	1.72E-02	2.60E-08	0.00E-01	0.00E-01
Te-132	3.24E+00	3.42E-07	0.00E-01	0.00E-01
I-132	9.52E-02	1.97E-03	0.00E-01	0.00E-01
I-134	3.63E-02	3.25E-03	0.00E-01	0.00E-01
I-133	8.67E-01	1.66E-03	0.00E-01	0.00E-01
Xe-133m	2.30E+00	5.37E-07	0.00E-01	0.00E-01
Xe-133	5.27E+00	1.26E-05	0.00E-01	0.00E-01
I-135	2.79E-01	1.66E-03	0.00E-01	0.00E-01

TABLE 15.7.3-5 SUMMARY OF RADIONUCLIDE CONCENTRATION AT VARIOUS POINTS IN THE LIQUID PATHWAY TO THE CITY OF MONROE POTABLE WATER INTAKE

		Concentration ($\mu Ci/cm^3$)		
Nuclide	Half-Life (days)	In Tanks	Entering Lake	At Intake
Xe-135m	1.08E-02	1.21E-05	0.00E-01	0.00E-01
Xe-135	3.80E-01	2.32E-05	0.00E-01	0.00E-01
Cs-135	8.40E+08	2.09E-12	2.09E-13	2.72E-15
Cs-134	7.52E+02	1.07E-06	1.72E-08	2.23E-10
Cs-136	1.30E+01	7.03E-07	0.00E-01	0.00E-01
Cs-137	1.10E+04	2.86E-06	2.52E-07	3.27E-09
Ba-137m	1.81E-03	5.30E-07	0.00E-01	0.00E-01
Cs-138	2.24E-02	3.23E-04	0.00E-01	0.00E-01
Ba-139	5.78E-02	3.26E-04	0.00E-01	0.00E-01
Ba-140	1.28E+01	1.41E-05	0.00E-01	0.00E-01
La-140	1.68E+00	6.94E-07	0.00E-01	0.00E-01
Ba-141	1.27E-02	3.21E-04	0.00E-01	0.00E-01
La-141	1.58E-01	6.04E-07	0.00E-01	0.00E-01
Ce-141	3.25E+01	9.55E-07	3.92E-26	5.09E-28
Ba-142	7.43E-03	1.90E-04	0.00E-01	0.00E-01
La-142	5.35E-02	1.57E-04	0.00E-01	0.00E-01
Ce-143	3.30E+01	9.44E-07	7.36E-26	9.56E-28
Pr-143	1.36E+01	1.25E-06	0.00E-01	0.00E-01
Ce-144	2.84E+02	9.45E-08	7.44E-11	9.65E-13
Pr-144	1.20E-02	1.88E-09	0.00E-01	0.00E-01
Nd-147	1.11E+01	9.45E-08	0.00E-01	0.00E-01
Np-239	2.35E+00	2.61E-04	0.00E-01	0.00E-01
Na-24	6.25E-01	3.32E-04	0.00E-01	0.00E-01
P-32	1.43E+01	7.04E-06	0.00E-01	0.00E-01
Cr-51	2.78E+01	1.89E-04	6.04E-27	7.84E-29
Mn-54	3.13E+02	2.20E-06	2.71E-09	3.53E-11
Fe-55	9.49E+02	3.15E-05	7.39E-07	9.60E-09
Mn-56	1.08E-01	1.57E-03	0.00E-01	0.00E-01
Co-58	7.14E+01	6.29E-06	2.69E-15	3.50E-17
Fe-59	4.50E+01	9.70E-07	5.10E-21	6.62E-23
Co-60	1.89E+03	1.25E-05	6.08E-07	7.90E-09
Ni-63	3.50E+04	3.15E-08	3.03E-09	3.93E-11
Cu-64	5.33E-01	9.44E-04	0.00E-01	0.00E-01
Ni-65	1.06E-01	9.42E-06	0.00E-01	0.00E-01
Zn-65	2.44E+02	7.14E-06	2.54E-09	3.29E-11
Zn-69	3.96E-02	6.51E-05	0.00E-01	0.00E-01
Zn-69m	5.71E-01	1.53E-19	0.00E-01	0.00E-01
Ag-110m	2.53E+02	3.15E-08	1.37E-11	1.78E-13
W-187	9.96E-01	9.44E-06	0.00E-01	0.00E-01
H-3	4.47E+03	5.71E-03	4.20E-04	5.46E-06

TABLE 15.7.3-6 RADIONUCLIDE CONCENTRATION ENTERING LAKE ERIE AND MONROE POTABLE WATER INTAKE DUE TO THE POSTULATED FAILURE OF THE LIQUID RADWASTE SYSTEM

	Concentration (μCi/cc)				
Nuclide*	In Tanks	Entering Lake	At Intake	MPC**	C/MPC***
Sr-90	2.50E-07	2.19E-08	2.85E-10	3.00E-07	9.49E-04
Ru-106	9.45E-08	2.24E-10	2.92E-12	1.00E-05	2.92E-07
I-129	3.58E-13	3.58E-14	4.65E-16	6.00E-08	7.75E-09
Cs-135	2.09E-12	2.09E-13	2.72E-15	1.00E-04	2.72E-11
Cs-134	1.07E-06	1.72E-08	2.23E-10	9.00E-06	2.48E-05
Cs-137	2.86E-06	2.52E-07	3.27E-09	2.00E-05	1.64E-04
Ce-144	9.45E-08	7.44E-11	9.65E-13	1.00E-05	9.65E-08
Mn-54	2.20E-06	2.71E-09	3.53E-11	1.00E-04	3.53E-07
Fe-55	3.15E-05	7.39E-07	9.60E-09	8.00E-04	1.20E-05
Co-58	6.29E-06	2.69E-15	3.50E-17	9.00E-05	3.89E-13
Co-60	1.25E-05	6.08E-07	7.90E-09	5.00E-05	1.58E-04
Ni-63	3.15E-08	3.03E-09	3.93E-11	3.00E-05	1.31E-06
Zn-65	7.14E-06	2.54E-09	3.29E-11	1.00E-04	3.29E-07
Ag-110m	3.15E-08	1.37E-11	1.78E-13	3.00E-05	5.92E-09
H-3	5.71E-03	4.20E-04	5.46E-06	3.00E-03	1.82E-03
				TOTAL C/MPC =	3.129E-03

* Only isotopes entering Lake Erie in concentrations greater than 1.0E-15 μCi/cc are listed.

** MPC = maximum permissible concentration (10CFR20, Appendix B, Table 2, column 2)

*** C/MPC = ratio to the concentration of the isotope of interest at Monroe intake to the MPC for that isotope.

TABLE 15.7.4-1 FUEL-HANDLING ACCIDENT PARAMETERS TABULATED FOR POSTULATED ACCIDENT ANALYSIS

FUEL BUNDLE TYPE	9x9[Note 9]	9x9[Note 9]	9x9[Note 9]	9x9[Note 9]	10x10	10x10
Analysis Methodology	RG 1.25	RG 1.25	RG 1.183	RG 1.183	RG 1.183	RG 1.183
Reactor Power (MWt)	3499	3499	3499	3499	3499	3499
Fuel Irradiation	recently irradiated	not recently irradiated	recently irradiated	not recently irradiated	recently irradiated	not recently irradiated
Decay Time after Shutdown (hr)	24	888	24	107	24	151
Number of Failed Fuel Rods	140	140	140	140	172	172
Fuel Rod Plenum ("Gap") ActivityRelease Fractions (%)						
Noble gasses (except Kr-85)	10	10	5	5	5	5
KR-85	30	30	10	10	10	10
Iodine-131 (I-131)	12[Note 1]	12[Note 1]	8	8	8	8
Iodines (other than I-131)	10	10	5	5	5	5
Alkali Metals	--	--	--	--	12	12
Number of Fuel Rods per Bundle	74	74	74	74	87.3[Note 2]	87.3[Note 2]
Radial Power Peaking Factor	1.5	1.5	1.5	1.5	1.7	1.7
Release Factors from Pool Water (%)						
Noble gases	100	100	100	100	100	100
Iodines	1	1	0.5	0.5	0.5	0.5
Time Period for Release of Activity from Reactor Building (hr)	<2[Note 6]	<2[Note 6]	<2[Note 6]	<2[Note 6]	<2[Note 6]	<2[Note 6]
Accident Duration	30 days	30 days	30 days	30 days	30 days	30 days
SGTS Iodine Filter Efficiency (%)	99	0	99	0	99	0
CREF Initiation	No	No	No	No	No	No
Release Height (m)	54.3 m[Note 3]	0	54.3 m [Note 3]	0	54.3 m[Note 3]	0
χ/Q main control room (sec/m3) 0-2 hours	3.65E-03[Note 4 Note 8]	4.25E-03[Note 7]	3.65E-03[Note 4 Note 8]	4.25E-03 [Note 7]	3.65E-03[Note 4 Note 8]	4.25E-03[Note 7]
χ/Q at EA Boundary (sec/m3) 0-2 hours	2.09E-04	2.09E-04	2.09E-04	2.09E-04	2.09E-04	2.09E-04
χ/Q at LPZ (sec/m3) 0-2 hours	4.86E-05	4.86E-05	4.86E-05	4.86E-05	4.86E-05	4.86E-05
Dose Conversion Factors	Note 5	Note 5	Note 5	Note 5	Note 5	Note 5
Iodine Pool Decontamination Factor	100	100	200	200	200	200

Notes:

TABLE 15.7.4-1 FUEL-HANDLING ACCIDENT PARAMETERS TABULATED FOR POSTULATED ACCIDENT ANALYSIS

1. Additional 20 percent based on NUREG/CR-5009 assuming extended burnup

2. Fraction accounts for partial length rods

3. SGTS exhaust stack-to-control room χ/Q calculated in Reference 8 using ARCON96 (Reference 10) assuming zero-velocity vent release. See Reference 8 for a complete description of the inputs and methodology used to calculate the χ/Q values used in the FHA analysis.

4. This SGTS stack χ/Q value is different than that used to calculate the control room operator dose in UFSAR Section 15.A. Both values were calculated using reviewed and approved methodologies. The value used for the FHA was calculated in Reference 8 using the same methodology used to evaluate other secondary containment release points. No credit assumed for SRP 6.4 factor of 4 reduction in χ/Q for control room dual air inlet configurations.

5. EPA Federal Guidance Reports 11 and 12 (References 11 and 12)

6. Rate of release conservatively based on a refuel floor volume of 950,000 ft^3 and an assumed air removal rate of 95,000 cfm. The normal rate of ventilation supplied by RBHVAC is approximately 33,000 cfm. 95,000 cfm effectively releases the source term within one-hour. (99.75 percent after one hour, >99.99 percent after two hours)

7. Secondary containment-to-control room χ/Q representing releases via locations other than SGTS calculated in Reference 8 using ARCON96 (Reference 10). See Reference 8 for a complete description of the inputs and methodology used to calculate the χ/Q values used in the FHA analysis.

8. The analysis of the 24-hour FHA involving recently irradiated fuel includes the effects of an initial period of unfiltered release via the RBHVAC stack. UFSAR Section 15.7.4.2.2 describes a 4.3 second period of unfiltered release; however, the Reference 8 analysis conservatively evaluated a 7.2 second unfiltered release. The χ/Q assigned to this release path was 4.03E-3 s/m3 based on the Reference 8 analysis.

9. GE11 9x9 fuel is no longer used in Fermi 2 fuel cycles. All GE11 fuel has been discharged to the spent fuel pool, is no longer recently irradiated, and satisfies the Reference 7 burnup restriction.

TABLE 15.7.4-2 FUEL-HANDLING ACCIDENT (DESIGN-BASIS ANALYSIS) ACTIVITY RELEASED TO THE ENVIRONMENT (CURIES)

Nuclide	Shutdown Activity (Ci/MWt)	Curies Released to Environment (includes decay and daughtering) (values taken from analysis output in Reference 8)			
	(Reference 4)	9x9**		10x10	
	0 hrs	24 hrs	816 hrs*	24 hrs	96 hrs*
Xe-131m	158	2.15E+02	9.65E+01	1.34E+02	1.59E+02
Xe-133m	2305	2.56E+03	9.18E-02	1.51E+03	6.93E+02
Xe-133	55280	6.93E+04	9.94E+02	4.09E+04	3.01E+04
Xe-135m	10420	5.64E+02		3.32E+02	1.75E-01
Xe-135	7149	1.58E+04		9.30E+03	6.93E+01
Kr-83m	3137	4.25E-01		2.50E-01	
Kr-85	302	1.18E+03	1.18E+03	4.64E+02	4.65E+02
Kr-85m	6734	2.07E+02		1.22E+02	1.78E-03
Kr-87	12920	3.12E-02		1.84E-02	
Kr-88	18300	6.47E+01		3.81E+01	8.93E-07
I-131	26310	3.79E+00	2.23E+01	1.49E+00	1.15E+02
I-132	38450	4.67E+00	4.17E-01	1.15E+00	6.06E+01
I-133	55020	3.83E+00	1.32E-09	9.41E-01	8.54E+00
I-134	60560				
I-135	51950	6.39E-01		1.57E-01	8.26E-03
Te-131m	3730				
Te-132	37900				

* No SGTS filtration of release.

** GE11 9x9 fuel is no longer used in Fermi 2 fuel cycles. All GE11 fuel has been discharged to the spent fuel pool, is no longer recently irradiated, and satisfies the Reference 7 burnup restriction.

TABLE 15.7.4-3 FUEL-HANDLING ACCIDENT (DESIGN-BASIS ANALYSIS) RADIOLOGICAL EFFECTS (DROPS OF RECENTLY IRRADIATED FUEL 24 HOURS POST-SHUTDOWN)

9 X 9 Fuel Rods That Do Not Meet Burnup Criteria of Reference 7, Table 3[b]

	Whole-Body Dose (rem)	Inhalation Thyroid Dose (rem)	
Main Control Room	0.251	14.1	(30-day Reg. Limit = 5.0/30.0)
Exclusion Area (915 m)	0.275	0.774	(2-hr Reg. Limit = 6.25/75.0)
Low-population zone (4827 m)	0.064	0.180	30-day (Reg. Limit = 6.25/75.0)

[a]10 X 10 Fuel Rods Assumed to Meet Burnup Criteria of Reference 7, Table 3

	TEDE Dose (rem)	
Main Control Room	0.307	(30-day Reg. Limit = 5.0)
Exclusion Area (915 m)	0.169	(2-hr Reg. Limit = 6.3)
Low-population zone (4827 m)	0.039	(30-day Reg. Limit = 6.3)

[a] These dose consequences bound the dose consequences of 9x9 fuel rods assumed to meet burnup criteria of Reference 7, Table 3.

[b] GE11 9x9 fuel is no longer used in Fermi 2 fuel cycles. All GE11 fuel has been discharged to the spent fuel pool, is no longer recently irradiated, and satisfies the Reference 7 burnup restriction.

TABLE 15.7.4-4 FUEL-HANDLING ACCIDENT (ANALYSIS DEFINING "RECENTLY IRRADIATED") RADIOLOGICAL EFFECTS

9 X 9 Non-AST Fuel Rods (37 day delay)[a]

	Whole-Body Dose (rem)	Inhalation Thyroid Dose (rem)	
Main Control Room	0.011	27.7	(30-day Reg. Limit 5.0 whole body/30.0 thy)
Exclusion Area (915 m)	0.10	1.37	(2-hr Reg. Limit 6.25whole body/75.0 thy)
Low-population zone (4827 m)	0.002	0.320	(30-day Limit 6.25whole body/75.0 thy)

9x9 AST Fuel Rods (4.5 day delay)[a]

	TEDE Dose (rem)	
Main Control Room	4.686	(30-day Reg. Limit 5.0)
Exclusion Area (915 m)	0.269	(2-hr Reg. Limit 6.3)
Low-population zone (4827 m)	0.063	(30-day Reg. Limit 6.3)

10 x 10 AST Fuel Rods (6.3 day delay)

	TEDE Dose (rem)	
Main Control Room	4.70	(30-day Reg. Limit 5.0)
Exclusion Area (915 m)	0.267	(2-hr Reg. Limit 6.3)
Low-population zone (4827 m)	0.062	(30-day Reg. Limit 6.3)

[a] GE11 9x9 fuel is no longer used in Fermi 2 fuel cycles. All GE11 fuel has been discharged to the spent fuel pool, is no longer recently irradiated, and satisfies the Reference 7 burnup restriction.

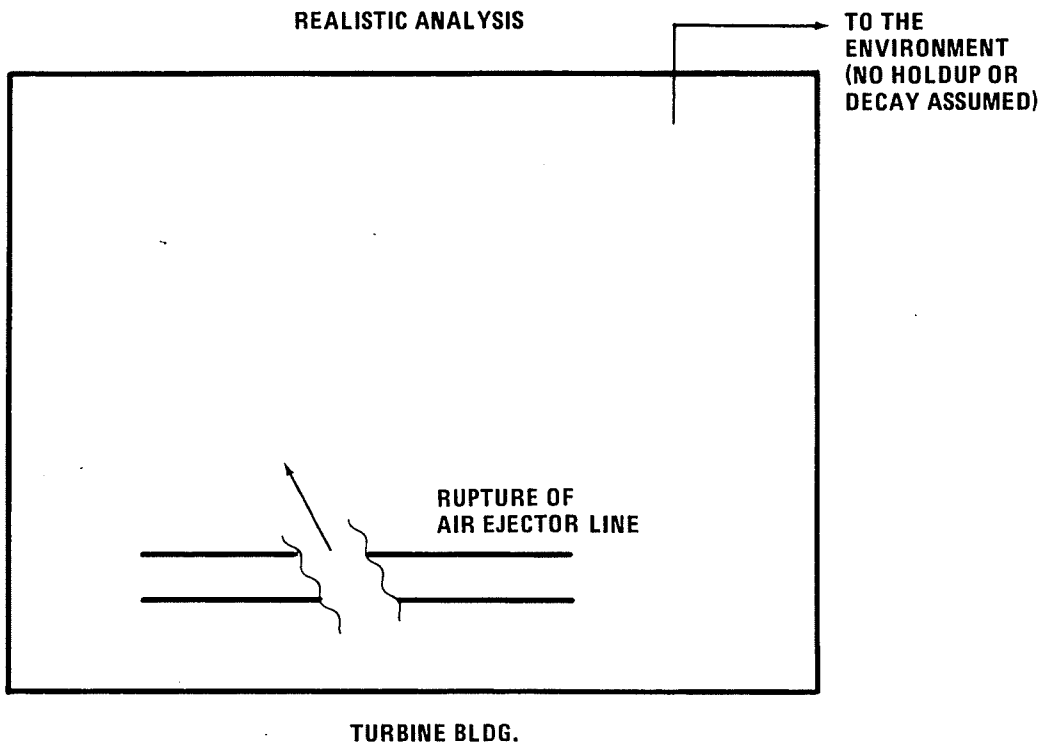

Fermi 2

UPDATED FINAL SAFETY ANALYSIS REPORT

FIGURE 15.7.1-1

LEAKAGE PATH FOR MAIN TURBINE STEAM AIR EJECTOR LINE FAILURE

15.8 ANTICIPATED TRANSIENTS WITHOUT SCRAM (ATWS)

In order to ease the severity of the consequences of the failure of the scram protection system following an anticipated transient, the NRC has imposed 10 CFR 50.62 requirements for all BWR owners.

15.8.1 ATWS Rule 10CFR50.62

Anticipated transients are transients expected to occur during the life of the plant. Anticipated transients without scram (ATWS) are those extremely low probability events in which an anticipated transient occurs and is not followed by an automatic reactor shutdown (scram) when required. The postulation of the "normal scram" failure in ATWS can only be deduced if more than one "single failure criteria" is assumed.

The NRC has since established the requirements to further reduce the risk to the public from such a postulated event. These requirements are specified in 10CFR50.62, "Requirements for Reduction of Risk from Anticipated Transients Without Scram (ATWS) Events for Light Water Cooled Nuclear Power Plants." For the BWR, 10CFR50.62 requires an alternate rod insertion (ARI) system, a manual standby liquid control system (SLCS), and an automatic recirculation pump trip (RPT) function.

The BWR Owners Group had prepared a topical report on the subject of ATWS and discussed the details of the design option how 10CFR50.62 is satisfied. Reference 1 is the NRC approved topical report. Detroit Edison is a member of the Owners Group and the Fermi 2 design is consistent with that discussed in Reference 1. ATWS was evaluated at the 3430 MWt power level (Reference 2). ATWS was analyzed with a 3% SRV drift and reviewed as acceptable by the NRC in Reference 3. For the GE14 new fuel introduction, ATWS was evaluated at current licensed thermal power and found to meet the ATWS acceptance criteria (Reference 4, 5).

Details of the Fermi 2 ARI can be found in Chapters 4 and 7, Subsections 4.5.2.2 and 7.6.1.18; details of the SLCS and enriched boron can be found in Chapter 4, Subsection 4.5.2.4; and details of ATWS-RPT can be found in Chapter 7, Subsection 7.7.1.2.3.1.

15.8 ANTICIPATED TRANSIENTS WITHOUT SCRAM (ATWS)

REFERENCES

1. General Electric Co., "Anticipated Transients Without Scram Response to NRC ATWS Rule 10CFR50.62," NEDE-31096-P-A, February 1987.
2. Letter from the USNRC to Detroit Edison, "Amendment No. 87 to Facility Operating License No. NPF-43 (TAC No. M82102)," September 9, 1992.
3. Letter from USNRC to Detroit Edison, “Fermi 2 – Issuance of Amendment RE: Safety/Relief Valve (SRV) Setpoint Tolerance Change (TAC MA0720),” dated July 31, 1998. (Amendment No. 123)
4. GE14 Fuel Design Cycle-Independent Analyses for Fermi Unit 2, GE-NE-0000-0025-3282-00, November 2004
5. Letter from USNRC to DTE Electric, “Amendment No. 196 to Facility Operating License No. NPF-43 (TAC No. MF0650),” February 10, 2014.

15.9 FAILURE OF THE COOLANT REGULATING INSTRUMENTATION - CORE COOLANT TEMPERATURE INCREASE

This accident was not reevaluated for the Fermi 2 power uprates.

Four coolant regulating instrumentation failures have been identified which can cause a power-coolant mismatch. These events are

a. Core coolant temperature increase

b. Feedwater controller failure

c. Recirculation flow control failure with decreasing flow

d. Recirculation flow control failure with increasing flow.

The analytical methods and assumptions used in evaluating the consequences of these accidents are considered to provide a conservative assessment of the consequences. The NRC has not issued guidelines for evaluating these accidents.

Event a., core coolant temperature increase, is addressed in this section while events b., c., and d. are addressed in Subsections 15.1.2, 15.3.2, and 15.4.5, respectively.

15.9.1 Identification of Causes

15.9.1.1 Starting Conditions and Assumptions

The reactor is going through normal shutdown and cooldown when the residual heat removal (RHR) shutdown cooling system fails.

15.9.1.2 Event Description

Loss of RHR shutdown cooling capability during reactor shutdown and cooldown results in a core coolant temperature increase.

15.9.2 Analysis of Effects and Consequences

15.9.2.1 Methods, Assumptions, and Conditions

An event that can directly cause reactor pressure vessel (RPV) water temperature increase is one in which the energy removal rate is less than the decay heat rate addition. The applicable event is loss of RHR shutdown cooling. This event can occur only during the low pressure portion of a normal reactor shutdown and cooldown when the RHR system is operating in the shutdown cooling mode.

15.9.2.2 Results and Consequences

For most single failures that could result in a loss of shutdown cooling, no unique safety actions are required. In these cases, shutdown cooling is simply reestablished using other normal shutdown cooling equipment. In cases where the RHR system shutdown cooling suction line becomes inoperative, a unique requirement for cooling arises. In operating states in which the RPV head is off, the RHR system LPCI mode can be used to maintain

water level. During operating conditions in which the RPV head is on, the system can be pressurized, and the low pressure cooling system, relief valves (manually operated), and RHR system suppression pool cooling mode can be used to maintain water level and remove decay heat.

15.9.2.3 Consideration of Uncertainties

The multiplicity of operator actions available to mitigate the effects of this transient ensure that reactor cooldown can be accomplished.

15.10 INTERNAL AND EXTERNAL EVENTS

These events were not reevaluated for the Fermi 2 power uprates.

The internal accidents to be considered in Subsection 15.10.1 are those that develop from fires in parts of the plant. Specific initiating events are not postulated.

Fires may be initiated from many sources. However, very few flammable materials are used in the plant. Even though fires are postulated to occur for the purpose of accident analysis, the actual probability of a fire is negligible due to both the absence of the combustion process and the low temperatures found in the plant.

External events, such as floods, storms, and earthquakes, are discussed in Subsection 15.10.2. Section 2.4 gives a detailed description of possible floods and storms at the Fermi site. That section also defines the probable maximum flood and the probable maximum meteorological event.

A complete description of the Fermi site seismological characteristics is given in Section 2.5. Response spectra are given for both the operating basis earthquake (OBE) and the safe shutdown earthquake (SSE).

The fire protection system is described in Subsection 9.5.1.

15.10.1 Internal Event Evaluation

A complete description of the Fermi 2 fire protection features is in Subsection 9.5.1, and a fire hazards analysis for safety-related areas is provided in the Fire Protection Program Description/Analysis Program.

15.10.2 External Event Evaluation

Floods, storms, and earthquakes are evaluated in this subsection.

15.10.2.1 Identification of Causes

15.10.2.1.1 Floods

Section 2.4 gives a detailed description of floods, flood parameters, and events concurrent with flooding for the Fermi site. This section also describes the probable maximum flood.

15.10.2.1.2 Storms

Refer to Section 2.3 for a detailed description of storms and other meteorological events concurrent with storms for the Fermi site. Also included in Section 2.4 is a description of the probable maximum flood.

For a description of the wind and tornado design parameters for all Category I structures and components, refer to Section 3.3.

15.10.2.1.3 Earthquakes

Refer to Section 2.5 for a complete description of the Fermi site seismological characteristics and history. Included are the response spectra for both the safe shutdown earthquake (SSE) and the operating basis earthquake (OBE).

15.10.2.2 Analysis of Effects and Consequences

15.10.2.2.1 Floods

Neither the plant ESF systems nor the safe shutdown capability of the reactor will be impaired by flooding of the Fermi site. All Category I structures are conservatively designed to behave elastically and remain functional and watertight under the effects of the probable maximum flood and wind generated waves specified in Sections 2.4 and 3.4. Refer to Section 3.8 for a discussion of the design of Category I structures. As mentioned in Subsection 3.4.1, the design stillwater flood elevation of the probable maximum flood is conservatively increased to 1.1 ft above the predicted probable maximum flood elevation specified in Section 2.4.

The reactor building, auxiliary building, and the RHR complex incorporate the flood protection measures specified in Subsection 3.4.4, to ensure that the effects of the probable maximum flood will not penetrate the exterior boundaries of these structures.

15.10.2.2.2 Storms

All Category I structures and components are designed or suitably protected to remain functional for all credible meteorological events, including the probable maximum meteorological event and the tornado, whose parameters are specified in Subsection 3.3.2.

Superficial damage may be sustained by miscellaneous plant property and nonseismic structures during the postulated tornado. However, this damage will not impair the plant ESF systems nor the safe shutdown capabilities of the reactor.

All roofs are properly sealed, pitched, and drained to prevent water from entering the building. Similarly, the reactor building superstructure siding above the fifth floor has sealed joints. As mentioned in Section 3.3, the metal siding will be assumed to blow away when the wind velocity exceeds 200 mph. However, the superstructure steel framing is designed to behave elastically for the tornado postulated in Subsection 3.3.2. Should this unlikely event occur and expose the refueling floor, the safe shutdown capabilities of the reactor would not be impaired.

A meteorological station has been constructed on the Fermi site and is maintained by Edison. Meteorological data, such as temperature, barometric pressure, and wind velocity and direction, are recorded to keep plant personnel informed of current meteorological conditions.

15.10.2.2.3 Earthquakes

All Category I structures, components, and equipment are designed to remain functional during an SSE. The seismic analysis and design for Category I structures are in accordance

with Sections 3.7 and 3.8, respectively. Some cracking of the reactor building exterior walls may occur during an SSE, but large, predominantly open cracks are not expected. Therefore, leakage of water into the reactor building through cracks will not occur.

Active earthquake recording instrumentation (triaxial accelerometers) are provided to measure the basic ground motion time history acceleration, as well as the seismic motion of the primary containment elements (including the base of the RPV pedestal). The recording system will be energized when a seismic trigger senses acceleration above a preset limit. This signal will be sent over shielded cables for permanent recording and data reduction, and will alert facility operators to the fact that an earthquake has occurred.

In addition to active instrumentation, passive sensors (triaxial spectrum recorders) are provided to measure various ground motion and in-structure response spectra.

The recorded data will be examined immediately, and the plant will be evaluated as described in Section 3.7.4.4, and operation will not be resumed until analysis and/or necessary refurbishing of all critical structures, systems, and components is completed. If examination shows that the SSE validation level is exceeded, further rigorous investigation will commence. If permanent deformation or evidence of material yield is encountered, appropriate repairs will be affected before startup.

Refer to Subsection 3.7.4 for a complete description of the seismic instrumentation.

15.11 FAILURE OF THE GASEOUS RADWASTE SYSTEM

15.11.1 Identification of Causes

An evaluation of those events which could cause a gross failure in the offgas system has resulted in the identification of a seismic event more severe than the one for which the system is designed as being the only conceivable event which could cause significant damage.

15.11.2 Starting Conditions and Assumptions

Equipment and piping are designed to contain any explosion which has a reasonable probability of occurring. Therefore, an explosion is not considered a possible failure mode. The equipment vaults are not accessible during normal operation. Therefore, an operator induced failure is not considered reasonable. The only credible event that could result in the release of significant activity to the environment is an earthquake.

15.11.3 Event Description

An event more severe than the design requirements of the offgas system is arbitrarily assumed to occur, resulting in the failure of the offgas system. The sequence of events following this failure is as follows:

	Events	Approximate Elapsed Time
a.	Event begins. System fails	0
b.	Noble gases are released	0
c.	Area radiation alarms alert plant personnel.	< 1 minute

15.11.4 Analysis of Effects and Consequences

15.11.4.1 Realistic Evaluation Methods

The analytical methods and associated assumptions used in evaluating the consequences of this accident are considered to provide a realistic, yet conservative, assessment of the consequences. In some instances very conservative assumptions are made in accordance with Regulatory Guide l.29 to show that the offgas system does not require Category I design.

15.11.4.1.1 Methods, Assumptions, and Conditions

The reactor is assumed to be operating at 3499 MWt for a period of time sufficient to cause an equilibrium inventory to be accumulated in the offgas system.

The activity in the offgas system is based on the following conditions:

a. 40 scfm air inleakage

b. l02,000 μCi/sec noble gas after 30-minute delay

c. Six charcoal beds

d. Removal of daughter products by equipment:

   1. Catalytic recombiner - 100 percent (iodine)
   2. Offgas condenser - l00 percent
   3. Aftercooler - l00 percent
   4. Precooler - l00 percent
   5. Holdup pipe - l00 percent
   6. Chiller - l00 percent
   7. Sandfilter - l00 percent.

e. Operating times

   l. Charcoal beds - l0 years
   2. Afterfilter - l0 years.

The radionuclide inventories for each component in the offgas system, as well as the total system inventories, are listed in Table 11.3-2. Table 15.11-1 presents the parameters used in this accident analysis.

15.11.4.1.2 Results and Consequences

Fuel Damage

There is no fuel damage as a result of this accident.

Fission Product Release From Fuel

There is no fission product release from the fuel as a result of this accident.

Fission Product Release to the Environment

It is conservatively assumed that l00 percent of the iodine and 10 percent of the noble gases in each component of the offgas system are released to the environment. Table 15.11-2 lists the total isotopic releases from this accident. The assumption that 10 percent of the noble gases in the offgas system is released is indeed a conservative one. Approximately 99 percent of the noble gas activity is contained in the charcoal adsorbers. The only credible failure that could result in the release of a significant amount of noble gases would be the loss of carbon from a charcoal adsorber. The circumferential failure of the steel structure

surrounding the charcoal bed would be such an accident. However, only 10 to 15 percent of the carbon in the bed would be released.

Measurements made at KRB indicated that the offgas is about 30 percent richer in krypton than air. As a result, when the carbon is exposed to the air, the krypton absorbed by the carbon eventually obtains equilibrium with the noble gases in the air. However, the first few inches of carbon will blanket the underlying carbon from the air. Therefore, a 10 percent loss of noble gases from the beds is conservative because of the small fraction of carbon exposed to the air.

Radiological Effects

The radiological effects for this accident are based on the total system activities summarized in Table 15.11-2. The resultant radiological exposures are presented in Table 15.11-1. These doses are based on conservative dispersion data (5 percentile site meteorology) to conform with Regulatory Guide 1.29 assumptions. The resulting exposures are a small fraction of the guideline values of 10 CFR 100 and the limits for radiation exposure specified in Regulatory Guide 1.29.

TABLE 15.11-1 FAILURE OF GASEOUS RADWASTE SYSTEM - PARAMETERS TABULATED FOR POSTULATED ACCIDENT ANALYSES

	Design-Basis Assumptions	Realistic Assumptions
I. Data and assumptions used to estimate radioactive source from postulated accidents		
A. Power level	NA[a]	3499 MWt
B. Burnup	NA	NA
C. Fuel damage	NA	None
D. Release of activity by nuclide	NA	Table 15.11-2
E. Iodine fractions	NA	
(1) Organic		0
(2) Elemental		100 percent
(3) Particulate		0
F. Reactor coolant activity before the accident	NA	Subsection 15.7.3.3.1
II. Data and assumptions used to estimate activity released		
A. Primary containment leak rate (percent/day)	NA	NA
B. Secondary containment leak rate (percent/day)	NA	NA
C. Valve movement times	NA	NA
D. Adsorption and filtration efficiencies	NA	NA
(1) Organic iodine		
(2) Elemental iodine		
(3) Particulate iodine		
(4) Particulate fission products		
E. Recirculation system parameters	NA	NA
(1) Flow rate		
(2) Mixing efficiency		
(3) Filter efficiency		
F. Containment spray parameters (flow rate, drop size, etc.)	NA	NA
G. Containment volumes	NA	NA
H. All other pertinent data and assumptions	NA	None
III. Dispersion data		
A. Exclusion area boundary (m)	NA	915
Low-population zone (m) (from Table 15A-2)		4827

TABLE 15.11-1 FAILURE OF GASEOUS RADWASTE SYSTEM - PARAMETERS TABULATED FOR POSTULATED ACCIDENT ANALYSES

	Design-Basis Assumptions	Realistic Assumptions
B. χ/Q for exclusion area boundary	NA	
(1) 0-2 hr		1.23 x 10-4
C. χ/Q for lowpopulation zone duration of the accident (from Table 15A-2)	NA	
(1) 0-2 hr		1.39 x 10-5
(2) 8-24 hr		NA
(3) 1-4 days		NA
(4) 4-30 days		NA
D. χ/Q for control room (duration of the accident)	NA	NA
(1) 0-8 hr		
(2) 8-24 hr		
(3) 1-4 days		
(4) 4-30 days		
IV. Dose data		
A. Peak activity concentrations in containment	NA	NA
B. Doses (REM)	NA	
(1) 2-hr dose at exclusion area boundary		
(i) Thyroid		4.3 x 10-2
(ii) Whole body		8.6 x 10-3
(2) Dose at low- population zone for duration of the accident	NA	
(i) Thyroid		4.8 x 10-3
(ii) Whole body		9.7 x 10-4
(3) Dose in control room for duration of the accident	NA	NA
(i) Thyroid		
(ii) Whole body		
(iii) Skin		

[a] NA = Not applicable.

TABLE 15.11-2 FAILURE OF GASEOUS RADWASTE SYSTEM - ACTIVITY RELEASED TO THE ENVIRONMENT

(Realistic Analysis)

Isotope	Activity Released (Ci)
I-131	4.8(-1)[a]
I-132	8.9(-2)
I-133	6.0(-1)
I-134	6.9(-2)
I-135	2.9(-1)
Kr-83m	3.6
Kr-85	1.4(-1)
Kr-85m	1.1(1)
Kr-87	1.4(1)
Kr-88	3.0(1)
Kr-89	3.6
Xe-131m	1.6
Xe-133	5.0(2)
Xe-133m	8.3
Xe-135	1.0(2)
Xe-135m	3.7
Xe-137	5.1
Xe-138	1.1(1)

[a] 4.6(-1) = 4.6×10^{-1}.

15.12 MALFUNCTION OF TURBINE GLAND SEALING SYSTEM

This malfunction was not reevaluated for the Fermi 2 power uprates:

15.12.1 Loss of Vacuum in the Gland Steam Condenser

The gland steam condenser is self sealing and during normal operation, noncondensables are removed from the gland steam condenser by one of two gland steam condenser blowers. In the event the operating blower malfunctions, the backup blower will automatically assume the gas removal requirements. Assuming loss of both blowers, vacuum will be lost in the gland steam condenser. The pressure in the gland steam exhaust header will increase to greater than atmospheric, allowing sealing steam to escape into the turbine building.

15.12.2 Analysis of Effects and Consequences

In the event of loss of vacuum in the gland steam condenser, the gland sealing steam pressure will begin to increase in the exhaust header. This will result in blowing sealing steam into the atmosphere around the glands (on the third floor of the turbine building). This pressure buildup will be alarmed in the main control room. Main control room personnel will then correct the situation and ensure vacuum is restored in the gland steam condenser. The gland sealing system is not required for a safe reactor shutdown, nor can its failure adversely affect the operation of safety systems required for a safe reactor shutdown. It is an ALARA (as low as reasonably achievable) and a personnel safety concern for personnel near the turbine.

15.13 SHUTDOWN COOLING MALFUNCTION DECREASING TEMPERATURE

This malfunction was not reevaluated for the Fermi 2 power uprates.

At design power conditions, no conceivable single failure type malfunction is possible in the shutdown cooling system that can cause a temperature reduction.

If the reactor were critical or near critical, a very slow increase in reactor power could result. A shutdown cooling malfunction leading to a moderator temperature decrease could result from misoperation of the cooling water controls for the RHR system heat exchangers. The resulting temperature decrease would cause a slow insertion of positive reactivity into the core. If the operator did not act to control the power level, a high neutron flux reactor scram would terminate the transient without fuel damage and without any measurable increase in nuclear system pressure.

15.14 LOSS OF SERVICE WATER SYSTEM

This event was not reevaluated for the Fermi 2 power uprates.

The residual heat removal service water (RHRSW), the emergency equipment service water (EESW), and the emergency diesel generator service water (EDGSW) systems supply cooling water, either directly or indirectly, to all ESF equipment. Subsections 6.3.2.2.6, 9.2.5, and 9.5.5 describe these systems.

15.14.1 Identification of Causes

The loss of the service water systems listed above can be caused by loss of the service water pump, loss of electrical power, loss of the service water piping, loss of the heat exchanger, or loss of control circuits. The EESW system has a temperature regulator valve that fails open. The RHRSW system uses a manually controlled globe valve for flow control. The EDGSW systems do not have regulating valves.

15.14.1.1 Starting Conditions and Assumptions

This accident is analyzed using the following assumptions:

a. Prior to this event the reactor turbine is operating normally at full design reactor power (3292 MWt)

b. The DBA occurs: namely, the circumferential sudden break of a reactor recirculation loop pipe occurs

c. A complete loss of normal power occurs simultaneously with the recirculation pipe break

d. The EDGs start normally

e. The ECCS, HPCI, ADS, LPCI, and core spray systems start and operate normally

f. The RHRSW system is manually started and valved into the RHR heat exchangers between 10 and 30 minutes after ECCS initiation to limit the suppression pool temperature to less than l85°F.

15.14.1.2 Event Description

An individual loss of an EDGSW system will cause loss of only the particular EDG that it cools. The EDG loss will cause loss of only the loads for that particular generator because the Fermi 2 essential power system consists of four independent buses. The loss of the EESW system will cause loss of the emergency equipment cooling water (EECW) system in that division. This loss will cause the eventual loss of the ESF equipment in the particular division cooled by the EECW system.

Loss of the RHRSW system will cause loss of the RHR heat exchanger in that division. For a worst-case assumption, the EDGSW, EESW, and RHRSW systems are assumed to fail simultaneously in the same division coincident with the LOCA. The EDGs will start and

load in both divisions. The EDGs without service water will operate approximately 3 minutes before overheating. The remaining division is unaffected.

The EECW system will start and isolate from the nonessential reactor building closed cooling water system (RBCCWS). This system will operate because it is a closed condensate system but will not be able to reject heat to the EESW system. When the EDGs in the division fail (from loss of EDGSW), the equipment serviced by the EECW will stop running. Thus, the EECW will no longer be needed. The remaining division is unaffected.

The RHRSW system failure will not allow the operator to use the RHR heat exchanger in that division. The remaining heat exchanger is unaffected.

15.14.2 Analysis of Effects and Consequences

15.14.2.1 Methods, Assumptions, and Conditions

In analyzing the failure of one division of the RHRSW system, it is assumed that the other division of service water is operable. This meets the single failure criterion (General Design Criterion 44). There are no common mode failures that can cause failure of both divisions of essential service water systems.

15.14.2.2 Results and Consequences

The failure of one divisional service water system results in no effect on the remaining divisional system. No additional operator action is required to initiate the remaining division. The loss of any service water subsystem and a single failure coincident with a LOCA will cause eventual loss of the division, but the effect is not as great as an immediate loss of one emergency power division coincidental with a LOCA. The consequences then reduce to the LOCA accident which assumes one division ESF equipment loss.

15.15 LOSS OF ONE (REDUNDANT) DIRECT CURRENT SYSTEM

This event was not reevaluated for the Fermi 2 power uprates.

15.15.1 Identification of Causes

Loss of one entire redundant dc system would be the result of a total loss of one of the batteries, plus the loss of the full capacity battery chargers or dc distribution panels. This could be due to a fire, hydrogen explosion, or equipment failure. However, the probability of each is very low because of the noncombustible nature of the room and the battery room ventilation requirements of six air changes per hour.

It would be more likely to lose one redundant battery due to the short circuiting of a cell or series of cells, hydrogen explosion within a cell, faulty fuse, or several other possible but rare events. Battery damage would not preclude the use of the charger for handling the normal loads unless it, too, were involved in the event. Any fault in the main distribution cabinet affecting the dc bus would cause the loss of only one division of the dc system.

15.15.1.1 Starting Conditions and Assumptions

The reactor is initially operating at l00 percent of rated power (3292 MWt).

15.15.1.2 Event Description

Loss of the ESF Division I 130/260-V dc battery would result in the loss of availability of the RCIC system and several motor operated containment outboard isolation valves. Loss of the ESF Division II 260-V dc system would eliminate the availability of the HPCI system and also remove motive power from several containment outboard isolation valves.

Since the 130-V dc supply for each ESF is derived from the 260-V dc center tapped battery, loss of the 260-V dc battery would eliminate control power to the ESF division of switchgear serviced from that particular l30-V dc system. Other pertinent effects would be a loss of diesel generator control, loss of control power to dc relays of the RHR and core spray systems, and loss of dc power to one reactor protection system (RPS).

Loss of one 48/24-V dc system would eliminate one redundant system of stack gas monitors, startup range neutron monitors, and process radiation monitors.

15.15.2 Analysis of Effects and Consequences

Assuming that a fire or other event rendered one dc system inoperative, the second redundant system would provide the capability of a safe shutdown.

The operation of the RCIC system is not essential to safe shutdown. Therefore, the loss of the RCIC system, due to the loss of the ESF Division I 260-V dc battery, would not prevent safe shutdown. Loss of motive power to the outboard isolation valves would not be critical, even if they should be needed, since each line is backed up with a redundant ac-operated isolation valve inside the containment.

A loss of an ESF Division II dc power system would remove the HPCI system should an incident occur in which the vessel did not depressurize. The HPCI system is, however, backed up by the automatic depressurization system (ADS), which has its power supply from the ESF Division I l30-V dc system. Thus, in the event of loss of all ESF Division II dc power, the ADS would depressurize the reactor, and the LPCI and core spray systems would provide adequate core cooling. Emergency diesel generators, RHR and core spray pump control, and RPS power are all redundant.

Loss of the 48/24-V dc system would have no significant effect because all indication is backed up with indication from the redundant division.

15.16 LOSS OF INSTRUMENT AIR SYSTEM

This event was not reevaluated for the Fermi 2 power uprates.

15.16.1 Identification of Causes

Equipment malfunctions or operator errors can initiate loss of instrument air supply system pressure.

15.16.1.1 Starting Condition and Assumptions

The station air compressor is loaded automatically to maintain 100 psi in the receiver tanks. The station air header automatic isolation valves are open, and the standby station air compressor is ready to automatically start.

15.16.1.2 Event Description

If the instrument air supply continues to decrease after falling pressure has initiated an automatic start of the standby station air compressor, the main control room will receive an alarm and the third station air compressor will be manually started.

15.16.2 Analysis of Effects and Consequences

15.16.2.1 Effects

Decreasing plant air pressure automatically shuts off plant air supply to equipment requiring station air and starts the control air compressors. An alarm occurs in the control room due to the control air compressor auto start. A sustained decrease in air pressure will cause isolation of both divisions of noninterruptible control air from the nonessential (non safety related) systems and components resulting in their associated equipment and systems being considered inoperative. In such a case, equipment or systems requiring station or interruptible control air go to a fail safe position or have qualified accumulators which automatically isolate to maintain the equipment in a safe condition. Isolation of the noninterruptible control air initiates an alarm in the main control room.

15.16.2.2 Analysis

The safety related portion of the instrument air system is the noninterruptible control air. Noninterruptible control air (NIAS) is supplied through two separate, fully qualified, distribution systems (Division I and II). Each division consists of a compressor, after cooler, filters, dryer, receiver tank, and distribution piping.

Reliability of the system (NIAS) is maintained by the fact that (1) equipment and piping is seismically qualified, (2) control air compressors and dryers are automatically electrically fed off the emergency diesel generators on loss of offsite power, (3) the system is automatically isolated on low header pressure or loss of offsite power, and (4) receiver tanks are capable of maintaining the system pressure at an acceptable level for the short duration transition period of the loss of offsite power event (See Table 8.3-5) until the compressors' electrical load is picked up by the diesel generators on loss of offsite power.

Based on the above, noninterruptible control air will provide the required instrument air on loss of station and/or interruptible air. Therefore, essential equipment will have the necessary control air available to perform their safety function through NIAS or accumulators.

APPENDIX 15A: DOSE CALCULATION MODELS AND SPECIFIC CALCULATIONAL VALUES

For a LOCA, the dose calculations have been re-evaluated as indicated in Section 15.6.5.5 using Alternative Source Terms (AST). The LOCA atmospheric dispersion factors for AST offsite doses were derived as per Section 2.3.4, with onsite (Main Control Room, modeled as a zero velocity vent release) AST dispersion factors derived as per Notes 4 and 7 to Table 15.7.4-1 for the AST Fuel Handling Accident analyses. The resulting LOCA AST atmospheric dispersion factors are provided in Section 15.6.5, replacing those discussed in Section 15A.1 and Table 15A-2 below. The resulting AST LOCA doses are shown in Section 15.6.5.

15A.1 OFFSITE TOTAL BODY AND THYROID DOSES (PRE-AST TREATMENT)

The whole-body and beta skin doses at the site boundary and low population zone have been calculated by the semi-infinite cloud model

$$D_{WB} = \sum_{i=1}^{n} \sum_{j=1}^{m} R_{ij} \frac{\chi}{Q_j} DCF_i \qquad (15A\text{-}1)$$

where

D_{WB} = whole-body dose for time period of interest, rem

R_{ij} = integrated release of ith isotope over j^{th} time interval, curies

$\frac{\chi}{Qj}$ = atmospheric dispersion factor to location of interest for j^{th} time interval, sec/m^3

DCF_i = dose conversion factor for i^{th} isotope, $\left[\frac{rem - m^3}{Ci - s}\right]$

The values of DCF_i has been evaluated in accordance with Regulatory Guide 1.3 as

$$DCF_i \ (0.25\bar{\Sigma}y)_i, \text{for whole body dose} \qquad (15A\text{-}2)$$

$$DCF_i \ (0.23\bar{\Sigma}\beta)_i, \text{for skin dose} \qquad (15A\text{-}2a)$$

where

$\bar{\Sigma}\beta$ = average beta energy

$\bar{\Sigma}\gamma$ = average gamma energy

The values of $\bar{\Sigma}_\beta$ and $\bar{\Sigma}_\gamma$ used in the calculations are presented in Table 15A-1 (Reference 1).

Fermi site meteorological data collected from the 60-meter tower over the period June 1, 1974, to May 31, 1975, were used to calculate the short-term χ/Q values used in the accident analyses. Values of χ/Q for the site boundary and low-population zone are presented in Table 15A-2. The 5 percentile χ/Q for the appropriate time interval was used for the dose calculations.

Thyroid doses at the site boundary and low-population zone have been calculated by the model

$$D_{TH} = \sum_{i=1}^{n} \sum_{j=1}^{m} R_{ij} \frac{\chi}{Q_j} B_j \frac{D_\infty}{A} \qquad (15A\text{-}3)$$

where

D_{TH} = thyroid dose commitment from exposure during time period of interest, rem

B_j = breathing rate during j^{th} time interval, m^3/sec

$\left(\frac{D_\infty}{A}\right)_i$ = thyroid dose commitment conversion factor from i^{th} isotope $\left(\frac{rem}{Ci}\right)$

The values of B_j used in the calculations are in accordance with Regulatory Guide 1.3. The values of B_j for the appropriate time intervals are

Time Interval	B_j (m^3/sec)
0-8 hr	3.47×10^{-4}
8-24 hr	1.75×10^{-4}
>24 hr	2.32×10^{-4}

The values of $\left(\frac{D_\infty}{A}\right)_i$ are presented in Table 15A-1 (Reference 2).

15A DOSE CALCULATIONAL MODELS AND SPECIFIC CALCULATION VALUES

REFERENCES

1. M. E. Meek and B. F. Rider, Compilation of Fission Product Yields, Vallecitos Nuclear Center, General Electric Co., NEDO-12154, January 1972.
2. Calculation of Annual Doses to Man from Routine Release of Reactor Effluents for the Purpose of Evaluating Compliance with 10 CFR Part 50, Appendix, USNRC Regulatory Guide 1.109, Revision 1, October 1977.

TABLE 15A-1 DOSE CALCULATION RADIONUCLIDE PARAMETERS PRE-AST TREATMENT

Nuclide	Decay Constant (s^{-1})[a]	$\overline{E}_\gamma$ (MeV/dis)[b]	$\overline{E}_\beta$ (MeV/dis)[b]	D_∞ A (rem/Ci)[c]
I-131	9.98×10^{-7}	0.381	0.1904	1.49×10^{6}
I-132	8.37×10^{-5}	2.28	0.501	1.43×10^{4}
I-133	9.26×10^{-6}	0.60955	0.41	2.69×10^{5}
I-134	2.20×10^{-4}	2.626	0.61	3.73×10^{3}
I-135	2.91×10^{-5}	1.574	0.368	5.60×10^{4}
Kr-83m	1.05×10^{-4}	0.00258	0.0382	
Kr-85m	4.30×10^{-5}	0.158	0.2549	
Kr-85	2.05×10^{-9}	0.00223	0.2505	
Kr-87	1.51×10^{-4}	0.793	1.328	
Kr-88	6.78×10^{-5}	1.98	0.3497	
Kr-89	3.64×10^{-3}	1.87	1.312	
Xe-131m	6.74×10^{-7}	0.0201	0.1422	
Xe-133m	3.67×10^{-6}	0.0415	0.19	
Xe-133	1.53×10^{-6}	0.0461	0.135	
Xe-135m	7.38×10^{-4}	0.431	0.0958	
Xe-135	2.12×10^{-5}	0.248	0.317	
Xe-137	3.02×10^{-3}	0.183	1.78	
Xe-138	8.15×10^{-4}	1.13	0.632	

[a] Nuclear Decay Rate for Radionuclides Occurring in Positive Releases from Nuclear Fuel Cycle Facilities, ORNL/NUREG/TM-102, August 1977.

[b] M.E. Meek and B. F. Rider, Compilation of Fission Product Yields, Vallecitos Nuclear Center, General Electric Company, NEDO-12154, January 1972.

[c] Calculation of Annual Doses to Man from Routine Releases of Reactor Effluents for the Purpose of Evaluating Compliance with 10 CFR Part 50, Appendix I, USNRC Regulatory Guide 1.109, Revision 1, October 1977.