Omaha Public Power District

LIC-16-0044
June 9, 2016

U. S. Nuclear Regulatory Commission
Attn: Document Control Desk
Washington, DC 20555-0001

Fort Calhoun Station (FCS), Unit 1
Renewed Facility Operating License No. DPR-40
NRC Docket No. 50-285

Subject: Response to NRC Request for Additional Information Re: Revise Current Licensing Basis to Use American Concrete Institute Ultimate Strength Requirements (CAC NO. MF6676)

References:

1. Letter from OPPD (L. P. Cortopassi) to NRC (Document Control Desk), "License Amendment Request 15-03; Revise Current Licensing Basis to Use ACI Ultimate Strength Requirements," dated August 31, 2015 (LIC-15-0077) (ML15243A167)
2. Letter from NRC (C. F. Lyon) to OPPD (L. P. Cortopassi), "Fort Calhoun Station, Unit No. 1 - Supplemental Information Needed for Acceptance of Requested Licensing Action RE: Revise Current Licensing Basis to use American Concrete Institute Ultimate Strength Requirements (CAC NO. MF6676)," dated December 15, 2015 (NRC-15-104) (ML15341A224)
3. Letter from OPPD (L. P. Cortopassi) to NRC (Document Control Desk), "Supplement of License Amendment Request 15-03; Revise Current Licensing Basis to Use ACI Ultimate Strength Requirements," dated December 23, 2015 (LIC-15-0142) (CAC NO. MF6676)(ML15363A042)
4. Letter from NRC (C. F. Lyon) to OPPD (S. M. Marik), "Fort Calhoun Station, Unit No. 1 - Request for Additional Information RE: Revise Current Licensing Basis to use American Concrete Institute Ultimate Strength Requirements (CAC NO. MF6676)"

Attached is the Omaha Public Power District (OPPD) response to a NRC request for additional information (RAI) (Reference 4) regarding License Amendment Request (LAR) 15-03 (Reference 1), which is to: "Revise Current Licensing Basis to Use ACI Ultimate Strength Requirements." This letter contains no regulatory commitments.

A001
NRR

If you should have any questions regarding this submittal or require additional information, please contact Mr. Brad Blome at 402-533-7270.

Respectfully,

Shane M. Marik
Site Vice President and CNO

SMM/epm

Enclosure – OPPD Response to NRC Request for Additional Information
Attachment 1 - OPPD Response Notes
Attachment 2 – Steel Reinforcement Statistics
Attachment 3 – Calculation FC08499, "Evaluation of FCS Concrete Compressive Strength Test Data"

c: M. L. Dapas, NRC Regional Administrator, Region IV
C. F. Lyon, NRC Senior Project Manager
S. M. Schneider, NRC Senior Resident Inspector

**REQUEST FOR ADDITIONAL INFORMATION
LICENSE AMENDMENT REQUEST
OMAHA PUBLIC POWER DISTRICT
FORT CALHOUN STATION. UNIT NO. 1
DOCKET NO. 50-285**

By letter dated August 31, 2015, as superseded by letter dated December 23, 2015 (Agencywide Documents Access and Management System (ADAMS) Accession Nos. ML15243A167 and ML15363A042, respectively), Omaha Public Power District submitted a license amendment request (LAR) to revise the current licensing basis to use American Concrete Institute (ACI) ultimate strength requirements at Fort Calhoun Station, Unit No. 1 (FCS). The LAR intends to revise the FCS Updated Safety Analysis Report (USAR) to change the structural design methodology for Class I structures at FCS with several exceptions. The exceptions are the containment structure (cylinder, dome, and base mat), the spent fuel pool, and the foundation mats. No change to the current licensing basis code of record is proposed for these structures.

The U.S. Nuclear Regulatory Commission (NRC) staff has reviewed the information provided in the application and determined that additional information is required in order to complete its formal review of the request.

RAI 1

Item 1 of the proposed changes in the LAR requests to replace the working stress design (WSD) method with the ultimate strength design (USD) method for normal operating/service loading conditions. The LAR proposes to apply this change to new designs or re-evaluations of existing Class I structures at FCS other than the containment structure, the spent fuel pool, and the foundation mats for all Class I structures.

a. **The proposed load combinations do not include operating thermal load and operating piping/equipment reaction loads. Please provide justification for excluding these relevant design load conditions considering the requirements of the FCS licensing basis Code of record ACI 318-63, "Building Code Requirements for Reinforced Concrete," the ACI 349-97, "Code Requirements for Nuclear Safety Related Concrete Structures" (Reference 6.11 in the LAR), the guidance in Regulatory Guide (RG) 1.142, Revision 2, "Safety-Related Concrete Structures for Nuclear Power Plants (Other than Reactor Vessels and Containments)" (Reference 6.22 in the LAR), and NUREG-0800, Standard Review Plan for the Review of Safety Analysis Reports for Nuclear Power Plants: LWR Edition" (SRP) Section 3.8.4, "Other Seismic Category I Structures" (Reference 6.12 in the LAR).**

OPPD Response

The proposed USD load combinations for normal operating/service loading conditions are based on those in the original USAR, with the same loads considered. When piping/equipment reaction loads are present, their dead load, live load, and OBE seismic loads must be considered in the new load combinations, as was done with the WSD load combinations.

The original design basis load combinations for normal operating/service loading conditions did not include operating thermal loads, which can be justified by the following:

- A review of Section 9.2 of ACI 349-97 indicates that in general, load combinations involving operating thermal loads are enveloped by those involving accident thermal loads.
- Accident temperature and thermal loads are included in the USAR for the no-loss-of-function load combinations. These are significantly higher than the operating temperature and thermal loads and thus govern structural design; therefore, use of the accident thermal loads meets the intent of the code of record, ACI 318-63.

RAI-2

Footnote 4 in Section 2.1 of the LAR states the following: "Soil dynamic pressure and hydrodynamic pressure loading shall be accounted, where applicable in accordance with the current licensing basis."

a. Considering soil dynamic pressure and hydrodynamic pressure loadings in the design of soil/water retaining structural components has been an established design practice. As such, they should be considered for the design of new Class I structures and the evaluation of existing FCS Class I structures to maintain consistency with the proposed changes in this LAR. Thus, using the term "current licensing basis" appears redundant and unclear in the context of footnote 4 and in the context of this LAR which requests to change the current licensing basis.

i. Please discuss the intent of the term "current licensing basis" in the context of this LAR and footnote 4.

ii. Please confirm that soil dynamic pressure and hydrodynamic pressure loadings were considered in the original design of the FCS Class I structures.

iii. The mark-up of the USAR, Section 5.11 does not include a statement relative to consideration of soil dynamic pressure and hydrodynamic pressure loadings. Please discuss the reason for excluding this relevant information from the USAR mark-up.

OPPD Response

The footnote refers to the design basis as it stands before submittal of this LAR. This LAR does not change the design basis regarding the application of soil dynamic pressure or hydrodynamic pressure loading.

Soil dynamic pressure and hydrodynamic pressure loadings were not specifically included in the original design of FCS Class I structures. Therefore, there is no intention to include the requirement for soil dynamic pressure and hydrodynamic pressure in the USAR.

RAI-3

Item 3 of the proposed changes in this LAR requests to use higher reinforcing steel yield strength values for the containment internal structure (CIS) that includes the reactor cavity and compartment (RC&C) walls and the CIS beams, slabs, and columns.

Section 3.3 of the LAR references DIT-SA-13-005, "Use of Higher Reinforcement Yield Strength for Operability Calculations," and states that

> **Quality records show that there were 115 heat code samples used in the construction of the CIS. Some of the heat code yield stress values could not be identified and 105 of the 115 samples are known. Based on 105 samples specifically used for CIS, the 95% confidence level is equal to 44.45 ksi. As a result, the current design steel yield strength (i.e. 40 ksi) is increased to 44 ksi with high confidence for the RC&C and for CIS.**

In addition, Section 2.10 of the LAR states that the FCS quality program during plant construction contained detailed procedures for controlling installation of reinforcing steel bars and included signoffs for each delivery, reinforcing steel test data, and the location where the steel reinforcement was placed in the Class I structures.

a. **Please provide statistical analysis information, including mean, standard deviation and coefficient of variation for each individual bar size on a heat-by-heat basis, as well as for all bar sizes (entire 105 samples population).**

   The response should demonstrate random sampling plan was implemented, traceability of the bars to their respective heats, and traceability to the location where the reinforcing steel bars were placed in the RC&C and the CIS beams, slabs, and columns.

b. **Considering the design deficiencies of CIS beams (shear and/or flexure interaction ratios greater than one), as summarized in Table 8 of the LAR, please provide justification for proposing to use the yield strength associated with the 95 percent confidence level for the entire 105 samples of reinforcing steel population rather than using 95 percent confidence level for individual bar size(s) corresponding to the shear and flexural reinforcing steel bars.**

OPPD Response

Response to Question 3a.

The requirements regarding reinforcing steel from the FCS QA Program, LIC-15-0142 Reference 6.24, demonstrate that a random sampling plan was used and that the bars are traceable to their respective heats. The bars are traceable to the building in which they were installed, but not to the specific location in that building. Excerpts from the QA Program are as follows:

> *8.3.5 Reinforcing Steel*
>
> *8.3.5.1 The steel supplier shall tag each bundle with the order number of the shipment. The supplier, through the contractor, shall, supply a materials test report for each metal heat used in each shipment to the Q.A. Staff.*
>
> *8.3.5.2 The Q.A. Staff will review each shipping order material certification for compliance to ASTM Specification A-615. Each heat number received will be logged by bar size and shipping order number.*

8.3.5.3 The staff will randomly select one heat of each ten received per bar size to be tested and inspected by the laboratory. Tests will consist of tensile tests and bend tests appropriate to the bar size per ASTM A-615 while the inspection will consist of verification of deformation criteria, also per A-615. The laboratory will furnish test and inspection reports to the staff who will be responsible for any required retests or corrective action.

Exact rebar placement data was not collected during construction (i.e., which specific heat was placed into which specific beam, slab, or column). A formal OPPD calculation was developed and contains the data that identifies if the heat was located in the CIS and RC&C which is denoted as "Reactor Plant" in the data set. Only the data associated with the "Reactor Plant" are used to calculate the rebar strength for CIS and RC&C.

In summary, the QA Program at the time of original construction sufficiently controlled the data such that rebar placement can be traced to building location and specifically to CIS and RC&C. Attachment 2 summarizes the key statistical information.

Response to Question 3b.

The intent of using the yield strength associated with the 95 percent confidence level for the entire population of 105 samples is to provide a single strength value representative of the entire population rather than individual strength values for each rebar size. Size #3 and #7 bars were the only two sets found to have 95 percent confidence level strength values below the proposed 44 ksi. Every test located for #3 bars is greater than 44 ksi, and only one test out of 12 located for #7 bars was found to be less than 44 ksi. In addition, the single test falling below 44 ksi for #7 bars was on heat #13995. An additional test on heat #13995 reported a yield strength of 44.00 ksi. Based on this information, we have reasonable assurance that the strength for #3 and #7 bars meets or exceeds the proposed 44 ksi strength value, and therefore using the 95 percent confidence level for the entire population of 105 samples is appropriate.

RAI-4

Items 2 and 3 of the proposed changes in this LAR requests to use higher concrete compressive strength and higher reinforcing steel yield strength values using analysis of historical test data for a limited number and specific areas of Class I structures. The language in the new Sections 5.11.3.8, "Concrete Compressive Strength," and 5.11.3.9, "Steel Reinforcing Capacity," included in the USAR mark-up in the LAR, gives an appearance that using analysis of historical test data as described in Sections 5.2.6 and 5.2.2.1 could be generically used for the FCS. In addition, these new sections appear to be redundant because Sections 5.2.6 and 5.2.2.1 of the LAR already describe the proposed changes.

a. **Please clarify the language and discuss the intent of new Sections 5.11.3.8 and 5.11.3.9 included in the USAR mark-up.**

b. **The term "capacity" in the title of Section 5.11.3.9 and the term "steel reinforcing capacity allowable stress" in the proposed language of Section 5.11.3.9 are not consistent with the request in the LAR which relates to "reinforcing steel yield strength." Please clarify.**

OPPD Response

As stated, Sections 5.11.3.8 and 5.11.3.9 of the USAR markup are redundant. OPPD FCS will exclude these sections from the final USAR revision since they provide no added value.

RAI-5

Item 3 of the proposed changes in this LAR requests to use higher concrete compressive strength (f'c) determined based on cylinder break test data for the Auxiliary Building (above Elevation 1007') and the CIS. The containment structure, intake structure, spent fuel pool, reactor cavity floor, and concrete around the reactor vessel will continue to use the f'c currently specified in the design basis documents.

a. **Measured strengths of laboratory cured cylinders may be significantly different from the in-place strengths because it is difficult, and often impossible, to have identical bleeding, consolidation, and curing conditions for concrete in laboratory-cured cylinders and concrete in structures. In addition, the properties of concrete may vary with elevation due to differences in placing and consolidation procedures, segregation, and bleeding. The ACI 318-63 (FCS Code of record), Section 504(a) indicates that additional test specimens cured entirely under field conditions may be required by the Building Official to check the adequacy of curing and protection of concrete.**

    i. **Please provide cylinder break test data for the Auxiliary Building and the CIS for specimens cured under field conditions during the original construction of the FCS, if available.**

    ii. **Considering the variabilities noted above, please provide a discussion to justify the request regarding the use of cylinder break test data of laboratory-controlled samples alone without performing an in-situ field test to establish a valid correlation between the statistical evaluation and the as-built concrete strength.**

b. **Please provide ACI 318-63, Section 504(c) strength test data analysis, and the 95 percent confidence level statistical analysis information. The response should demonstrate that random sampling plan was implemented, and traceability of the samples to their respective structure and the location where the concrete was placed.**

OPPD Response

Response to Question 5a.

Calculation FC08499, "Evaluation of FCS Concrete Compressive Strength Test Data." (Attachment 3) is provided and performs the statistical analysis and provides the compilation of all retrievable cylinder break test data for the Auxiliary Building and the CIS. It includes data from laboratory cured cylinders and the field cured cylinders.

The field samples were not well controlled. For example, some samples were reported as *NOT @ AREA PLACED, LOST ON JOB, or DAMAGED AT JOB SITE.* Typically field cured samples are not as well maintained as lab cured samples.

Per ACI 318-63 Section 504(a), "Specimens made to check the adequacy of the proportions for strength of concrete or as a basis for acceptance of concrete shall be made and laboratory cured in accordance with ... (ASTM C31)."

The statistical analysis of the available original lab cured test data supports the use of the actual concrete strength in accordance with Section 2.2 of LIC-15-0142 which meets the strength testing requirements of the FCS licensing basis concrete Building Code ACI 318-63 Section 504. Additionally, it is known that concrete compressive strength continues to increase with age when it is well maintained. The request to use increased concrete strength is limited to locations which do not undergo prolonged exposure to high radiation, excessive moisture, or harsh chemicals. Therefore, it is reasonable to conclude that the in situ concrete strength meets or exceeds the as-built concrete strength. The statistical analysis is documented in a calculation. OPPD has no plans for additional strength testing at this time.

Response to Question 5b.

The FCS QA Program demonstrates a random sampling plan was implemented and sample traceability exists with regard to specific sample pour locations. Detailed pour location and sample data can be found within calculation FC08499 (Attachment 3).

RAI-6

Please provide a discussion and a sample of quantitative data regarding reconciliation of bond and reinforcing steel anchorage requirements of ACI 318-63, when using higher concrete compressive strength, against the as-installed shear and flexural reinforcing steel arrangement.

OPPD Response

Bond strength capacity is calculated in Sections 1301 and 1801 of ACI 318-63. The change in bond strength as it applies to the increase in concrete strength is proportionate to the square root of f'_c since all other terms (i.e. 3.4, 4.8, 6.7 or 9.5 and D for bars conforming to A307) are constants.

The requested increase in concrete compressive strength for the CIS corresponds with a 14% increase in concrete bond strength which is greater than the 10% requested increase in rebar yield strength. Therefore, the development of rebar pertaining to bond strength remains adequate under the increased material properties.

The below comparison between proposed and existing material strengths is made based on bond strength capacity as calculated in ACI 318-63.

Ratio of increased bond strength:
$\sqrt{5200}$ psi : $\sqrt{4000}$ psi = 1.14

Ratio of increased yield strength:
44 ksi : 40 ksi = 1.10

RAI-7

The footnote for Table 7 of the LAR indicates that the application of actual concrete compressive strength in lieu of the original specified design values is not allowed where structures undergo prolonged exposure to high radiation, excessive moisture, or harsh chemicals. Table 7 of the LAR indicates that the increased compressive strength of concrete will not be used for reactor cavity floor and concrete around the reactor vessel.

a. **Please provide a discussion and the rationale for requesting to allow increased compressive strength for the reactor cavity walls and other compartment walls relative to the footnote for Table 7.**

OPPD Response

OPPD requests an increase in concrete strength for the walls of the fuel transfer canal, the reactor cavity pool walls, the steam generator and reactor coolant pump walls, and the pressurizer compartment floor and walls. These areas of the CIS are not exposed to excessive moisture or chemicals. The transfer canal and reactor cavity pool walls are protected by the stainless steel liner from moisture and chemical exposure. The transfer canal is dry except during refueling outages.

Worst case radiation exposure levels from survey data correspond with 60-year plant life total estimated gamma and neutron doses, 4.73.E+06 rad and 1.58.E+13 n/cm^2 respectively, which are lower than the critical levels listed in NUREG/CR-7171 Section 5.2, 2.00.E+10 rad and 1.00.E+19 n/cm^2 respectively.

Therefore, no loss in concrete compressive strength due to prolonged exposure to high radiation, excessive moisture, or harsh chemicals is expected for the areas of the CIS for which OPPD has requested increased concrete strength.

RAI-8

According to Section 2.7 of the LAR, it is the NRC staff's understanding that (1) FCS currently inspects the Auxiliary building per procedures SE-PM-AE-1001, Auxiliary Building Structural Inspection, and the CIS in accordance with procedure SE-PM-AE-1004, Containment Building Structural Inspection; (2) each procedure has an inspection frequency of 3 years with caveats to increase or decrease the frequency as accumulated inspection findings warrant, but shall not exceed 5 years; and (3) a review of the results from recent inspections did not identify any significant structural deterioration that would invalidate the use of the current licensing basis or proposed licensing basis items requested by this LAR.

Considering the brevity of the above statements in the LAR:

a. **Please provide a general description of the FCS inspection program for the Auxiliary building and the CIS. The response should, as a minimum, identify and discuss the industry standard(s) used to develop the FCS inspection procedures, current inspection frequency, the scope and the method of inspection, and the criteria used for classification of inspection findings.**

b. **Please discuss the highlights of findings of the last three inspections of the Auxiliary building and the CIS, and any corrective actions taken to disposition them.**

c. **Please discuss the definition of "significant structural deterioration" noted in Section 2.7 of the LAR. Also, discuss the threshold where an inspection finding (crack, etc.) will be designated as "significant structural deterioration".**

OPPD Response

Response to Question 8a.

Procedures SE-PM-AE-1001, "Auxiliary Building Structural Inspection," and SE-PM-AE-1004, "Containment Building Structural Inspection," monitor the structural condition of the auxiliary building and containment internal structure. The structures are assessed and results are documented in a manner sufficient to give reasonable assurance that the structure, components, supports, and fasteners are capable of fulfilling their intended design function. This is achieved by performing a visual inspection of accessible surfaces (interior and exterior) of the buildings (broken down by area/room with reference drawings). The inspection includes all exposed surfaces of the structure, joints and joint material, interfacing structures and material (e.g., abutting soil), embedments, and attached components such as base plates and anchor bolts. In addition, the inspections include a representative sampling of Critical Quality Equipment (CQE) components such as support pedestals; piping and snubber seismic supports; cable tray seismic supports; HVAC seismic supports; "seismic gap" between Containment Building and Containment structure and a representative sampling of component supports and component support fasteners; pipe supports and equipment anchorage; supports for cable trays, conduits, HVAC ducts, tube track and tubing; anchorage of racks, panels, cabinets, and enclosures for electrical equipment.

Specific industry codes and standards used in the development of the FCS inspection procedures SE-PM-AE-1001 and SE-PM-AE-1004 include ACI 349.3R-96, ACI 201.1R-92, ASCE 11-90, RG 1.127 Rev. 1, and Generic Aging Lessons Learned (NUREG-1801, Rev. 0). The Structures Monitoring Program (SMP), which includes SE-PM-AE-1001 and SE-PM-AE-1004, is consistent with the requirements of GALL Chapters XI.S5, XI.S6 and applicable criteria in XI.S7. A previous Staff review concluded, per NUREG-1782, that FCS has demonstrated the SMP will effectively manage aging in structures and components in which this program is credited.

The current frequency for performance of SE-PM-AE-1001 and SE-PM-AE-1004 is 144 weeks and every other RFO, respectively, which meet or exceed the frequency requirements established in ACI 349.3R-96.

Criteria used to classify inspection findings is broken into three categories; Acceptable, Acceptable after Review, and Unacceptable. Table 1 contains a general breakdown of the criteria as listed within the inspection procedures; quantitative limits used to determine the classification of findings are contained within ACI 349.3R-96.

Table 1; Criteria for Classification of Inspection Findings

Acceptable	Acceptable after Review	Unacceptable
Absence of leaching and chemical attack	Appearance of leaching or chemical attack	Conditions which exceed the limits described in Step 10.2, or other evidence of significant structural deterioration of accessible concrete liner or other building features which may affect structural integrity or leak tightness
Absence of abrasion, erosion and cavitation	Areas of abrasion, erosion and cavitation	
Absence of dummy areas (poorly consolidated concrete, with paste deficiencies per ACI 201.1R)	Dummy areas which may exceed the cover concrete thickness in depth	
Minor spalling, scaling, popouts and voids, and passive cracks	Excessive spalling, scaling, popouts and voids, and passive cracks	Indications of widespread adhesion/cohesion problems, environmental attack or poor performance indicators on joints, joint materials, or waterproofing membranes
Absence of any signs of corrosion in reinforcing steel system or anchorage components	Corrosion staining of undefined source on concrete surfaces	
Absence of excessive deflections, settlements or other physical movements that may affect structural performance	Passive settlements or deflections within the original design	
Absence of corrosion of exposed embedded metal surfaces and corrosion stains around embedded metal	Presence of spalling, scaling, popouts and voids, or other signs of deterioration around anchorage embedments	
Absence of detached embedments or loose bolts	Evidence of corrosion or degradation of reinforcing steel, anchors, or exposed embedded metal surfaces	
Absence of indications of degradation due to vibratory loads from piping and equipment	Indications of separation, environmental degradation, or water leakage in joints or joint materials	
No signs of separation, environmental degradation, or water in-leakage are present in joints or joint material	Indications of degradation in waterproofing membranes	
Absence of degradation in any waterproofing membrane protecting below-grade concrete surfaces (within the inspected area)		
Non-structural elements appear to be serving their desired function		

Response to Question 8b.

The past three inspections for both the Containment Internal Structure and Auxiliary Building did not identify any significant structural deterioration. Detailed observations are documented for each building, elevation, and equipment inspected.

Each of the inspections document the presence of cracks and other minor conditions which were determined to be acceptable as is. Per the procedure, any conditions that are classified as "Acceptable after Review" or "Unacceptable" would require a Condition Report to be generated in the station's Corrective Action Program.

Table 2 provides a summary of the findings applicable to concrete structures which required corrective actions and work performed to resolve the noted conditions. To date, all findings requiring corrective actions have been resolved or are planned/scheduled to be resolved during the upcoming RFOs.

Table 2; Structural Findings from Past Inspections

2005 Inspection (WO131761) – Containment Internal Structure			
Condition Report	Finding	Corrective Action(s)	Work Completed
200501904	Multiple grease trails observed on the outside of Containment Structure from various rooms in the Auxiliary Building	None	Grease trails on the exterior walls of the containment building are caused by leakage from upper tendon end grease can seals. The mechanism for these grease trails is well understood and documented, they occur/recur when ambient temperature increases cause tendon grease to relieve volume. They have no effect on the ability of the tendon grease to inhibit corrosion to the tendons and has no detrimental effect on the concrete. Tendon grease leakage is routinely monitored by inspections conducted IAW ASME Code Section XI, SUBSECTION IWL.
	A hair line to slightly larger crack observed on the underside of the floor slab at elev. 1045' which contained a white particulate	Track completion of WR 82497 (WO 218196), which has been written to clean and investigate further the source of the particulate in the cracks on the underside of the slab on the 1045' elev.	This work order has been tracked to completion. WO 218196 is coded as complete. The surface was cleaned with lime away and left clean.
	Rust stains were observed around two hairline cracks on the underside of the floor slab at elev. 1060';	Track completion of WR 82496 (WO 218192), which has been written to clean the rust stains and investigate further the source of the moisture in the cracks on the underside of the slab on the 1060' elev.	This work order has been tracked to completion. WO 218192 is coded as complete. The system engineer performed a walkdown of the underside of containment 1060' floor slab and

			determined no additional cleaning required at this time. This area will be monitored by SE-ST-CONT-0001 for further deterioration. See the work order for further details
	A shallow spall approximately 1 SF in size was observed on concrete beam supporting elev. 1013' floor slab	None	The shallow spall area noted on the concrete beam supporting the 1013' elev. Floor slab has been noted in previous inspections and has been assessed to not be an operability issue. CR 200303808 evaluated this spalled area on this beam.
2009 Inspection (WO318189) – Containment Internal Structure			
Condition Report	Finding	Corrective Action(s)	Work Completed
2009-5711	Rust evidence was noted on the face of containment columns 14 and 1 (the second and third column clockwise from the PAL door. The rust discoloration is widespread in this area and easily visible from the adjacent 1022 platform. The corrosion source is not easily apparent; multiple structural steel items in the area appear to be affected. A portion of the steel on the containment side of penetration M-93 (near Column 14) has notable rust, as does a portion of the steel on the containment side of penetration M-96 (near Column 1).	WO 549129 is currently in "PLAN" Status	Wrote WR 143491 (WO 549129) for investigation of the source and cause of the corrosion and the extent of condition. This is related to CR 2009-5714. The CRG changed the condition level to B due to concern for the source. They closed this CR to Level B CR 2009-5714.
2015 Inspection (WO360747) – Containment Internal Structure			
Condition Report	Finding	Corrective Action	Work Completed
N/A	No Structural Conditions requiring Corrective Actions were identified	N/A	N/A
2003 Inspection (WO109603) – Auxiliary Building			
Condition Report	Finding	Corrective Action	Work Completed

200301965	A section of expand-o-flash along the east side of the room 81 roof was found to be torn	Document cause and work accomplished on WO 148953. WO 148953 is closed.	The work order associated with this action item is being tracked in the integrated plant schedule. Since it has no safety significance and is a level 6 CR; closing this action item. The cause of any failures and the actions taken to correct the problem will be documented in the associated work order.
2008 Inspection (WO259063) – Auxiliary Building			
Condition Report	Finding	Corrective Action	Work Completed
2008-6516	Aging indications on the roof area of Rm. 69	Initiated WR 128723 - Repair/Replace Roof Area Above Rm. 69.	WO 321564-01 Closed
	Aging indications in the Rm. 69 roof area flashing caulk	Initiated WR 128724 - Recaulk the Roof Area Flashing Above Rm. 69.	WO 321564-02 Closed
	A section of 1 inch conduit is unattached, located on the Rm. 69 roof	Initiated WR 128726 - Reattach Section of 1 Inch Conduit Located on Rm. 69 Roof.	Replaced one inch straps on conduit. It is no longer sagging (WR 128726).
	Debris on the roof area of Rm. 69	Initiated WR 128727 - Clean Debris From Roof Area Above Rm. 69.	Debris removed (WR 128727)
	Signs of seepage on the ceiling of the Diesel Air Intake Enclosure	Initiated WR 128729 - Repair the Roof Flashing Above Diesel Air Intake Enclosure.	WO 321564-03 Closed
	Peeling paint and signs of seepage on the Rm. 82 ceiling	Initiated WR 128731 (WO 321586) - Repaint the Ceiling of Rm. 82.	WO 321586 Cancelled
	Peeling paint on wall areas of Rm. 69	Initiated WR 128732 - Repaint Wall Areas of Rm. 69.	WO 321587-01 Complete
	Peeling paint on ceiling areas of Rm. 69	Initiated WR 128734 - Repaint Ceiling Areas of Rm. 69.	WO 321587-02 Complete
2013 Inspection (WO365092) – Auxiliary Building			
Condition Report	Finding	Corrective Action	Work Completed
2011-06051	Water dripping from ceiling in Corridor 4. The crack is approximately 3 ft long. The current leakage coming from the crack is approximately 5-6 drops per minute at this time. The crack is located adjacent to column E-7A.	Performed walkdown, hairline crack will be documented under SE-PM-AE-1001 and monitored for growth. From a flooding perspective, leak is well within capacity of aux building sump pumps and will not require repairs at this time. Ceiling area has been and will continue to be monitored under the Auxiliary Building Structural Inspections (SE-PM-AE-1001). CR	Wrote WR 166811. Completed walk downs (two different times) of the area noted in the Condition Description, could not find any leakage source. This is an interior location with no ground water. Reviewed SE-PM-AE-1001, "Auxiliary Building Structural Inspection" procedure. Review of recently completed Auxiliary Building Structural Inspections (SE-PM-

		2011-06051 determined no actions are required.	AE-1001) performed to determine if the hairline crack found in Corridor 4 ceiling has been previously identified. There are numerous observations of fine cracks in Corridor 4. Also noted are fine ceiling cracks in the area of the 7A column line.
2013-04777	- 1/8" crack was found in the pyrocrete in front of 1A4-13 in the West switchgear room. This is on the East wall where there fire doors are located. - 1/4" crack was found under the girder above T1B-4B on the East wall in the West switchgear room. - 1/4" crack was found on the pyrocrete wall above Door 1011-19 in the East switchgear room.	Track WR 192983 to completion. WO476857 tasks 1, 2 and 3 were completed and the pyrocrete cracks identified were sealed	Wrote this CR and Initiated WR 192983. This is not a structural concern, function of the pyrocrete is to provide separation of redundant trains of switchgears, load centers, and associated electrical equipment.
2013-04779	Signs of past leakage on M-2B in DG-2 Room	CR 2009-4099 resolved the leakage issue. WR 193429 (WO 478174) is currently in "PLAN" Status	Wrote WR 193429 and placed a WR tag on the wall. This is not a DNC. The only issue is that there is currently a stain on the wall that indicates past leakage. WR 193429 will paint the wall and cover up the leakage. This way any future leakage can be seen. The Work Management Process will drive the completion of the WR.

Response to Question 8c.

Significant Structural Deterioration is defined as measurable structural deterioration which, when compared with past inspections, shows strong evidence of an increase of structural degradation which could affect a building or component's structural integrity or leak tightness. Evidence of cosmetic or superficial deterioration, unless determined by sound engineering judgement to be significant, is not considered significant structural deterioration.

Threshold will be based on previous findings and codes/standards referenced in procedures. Previous inspections, did not identify any signs of significant structural deterioration and the structures were capable of performing their specified safety functions.

RAI-9

Section 2.0 of the LAR states that in 2012, two latent engineering errors were discovered during preparations for a planned extended power uprate of FCS and a detailed extent of condition concluded that several concrete beams in the CIS do not meet the current design basis. In addition, Section 2.8 (Table 8) of the LAR provides summary of analysis results for CIS beams. The LAR does not discuss the operating experience that prompted for structural re-evaluation of intake structure, Auxiliary Building, and the RC&C walls.

a. **Please provide a discussion regarding the operating experience (design deficiencies, etc.) that prompted the RC&C structural re-evaluation and the proposed request to use the limit state design method.**

b. **Please provide a discussion regarding the operating experience (design deficiencies, etc.) that prompted the intake structure and Auxiliary Building structural re-evaluation and the proposed requests in the LAR.**

OPPD Response

At FCS, Class 1 structures are the concrete Internal Structures of Containment, Containment, Auxiliary Building, and Intake Structure.

The Root Cause Analysis (RCA) and associated Extent of Condition (EOC) evaluation conducted for the Containment Internal Structures concluded that "FCS did not comply with the design load combination criteria for working stress and No Loss of Function for Containment internal concrete structures as required by USAR Section 5.11.3." and that the condition extended to the RC&C and Auxiliary Building.

RC&C

During the Extent of Condition review it was discovered that calculations for the Reactor Cavity and Compartments (RC&C) were deficient or nonexistent. The RC&C includes all internal concrete walls within containment including the reactor cavity, fuel transfer canal, pressurizer compartment, and steam generator/reactor coolant pump (SG/RCP) compartments. Though the internal walls are integral with the beams, columns, and floor slabs of the Containment Internal Structures (CIS), the two scopes were deliberately kept separate to simplify modeling and qualification.

The request to allow use of the Limit Design Method is required because there is no equivalent method in the ACI 318-63 Code. The original design of the reactor cavity and compartment walls (RC&C walls) was based on the limit state of the reinforced concrete structure. Design forces and moments at the limit state, which were used to determine sizes and placements of reinforcing bars (rebar), cannot be replicated by linear finite element analysis (Linear Design Method). Design forces and moments at the limit state can only be computed by using non-linear (or step-wise linear) finite element analysis (Limit Design Method). While the Limit Design Method is able to reasonably reproduce the original design forces and moments at the limit state by simulating load redistribution behavior, the Linear Design Method is not.

Application of the limit design method helps resolve overstress issues. The limited clearances available in the RC&C makes placement of additional concrete or other support structures difficult and would impact the ability to perform routine maintenance and inspections. Use of the proposed changes significantly reduces or eliminates the need for modifications in the RC&C. The safety benefit that would be gained by the installation of additional structures in this area is small when compared to the increased radiation exposure to workers during installation.

Auxiliary Building

The Extent of Condition review of the calculations of record for 11 members within the Auxiliary Building was performed. The more highly loaded members were selected for review. The structural design calculations of record were checked against design drawings and reviews of the calculations were performed to assess the quality of the evaluations. The reviews identified discrepancies similar to those identified for the Containment Internal Structure. Therefore, a reconstitution effort was warranted.

The change to USD for normal service loads (in lieu of WSD) will increase the consistency between normal operating/service conditions and no loss-of-function conditions. Projects requiring new designs or reevaluations of existing reinforced concrete structures can be conducted more efficiently with less chance for error as design calculations will only require USD member capacities. The current method requiring both WSD and USD calculations, is unnecessarily complex, and results in over-designed and over-engineered concrete structures.

Use of the proposed changes significantly reduces or eliminates the need for modifications in the Auxiliary Building. The safety benefit that would be gained by the installation of additional structures is small when compared to the increased difficulty of performing maintenance activities resulting from reductions in work space.

Intake Structure

The original design basis calculations for the Intake Structure are not available (CR 200504328, 200504345, 2009-3769). This deficiency was discovered during the NRC Safety System Design and Performance Capability team inspection of the raw water system. As a result, analyses were performed in 2009 and 2010 using Finite Element Analysis. The structure was checked against both Working Stress Design criteria and Ultimate Strength Design criteria. The evaluation indicated that the Intake Structure is structurally adequate. As a result, a reconstitution effort is not planned for the FCS Intake Structure. The Intake Structure meets the current design basis of WSD and USD. The use of USD for future analysis is also being requested for the Intake Structure to provide a consistent approach for all reanalysis work for CIS, RC&C, or Auxiliary Building.

RAI-10

Item 4 of the proposed changes in this LAR requests to use the limit state design method for evaluating the RC&C walls, including the use of dynamic increase factors (DIF) for impulsive loads, according to equations in commentary of Appendix C of ACI 349-97.

Section 2.9 of the LAR attempts to perform a gap analysis of ACI 318-63 (FCS Code of record) to ACI 349-97. Section 2.9.4 of the LAR states the following: "Based on the comparison of ACI 349-97 Code and the dissimilarities to ACI 318-63 it has been determined that use of DIF as described in ACI 349-97 and RG 1.142 would be advantageous for re-evaluation of the RC&C. Use of the USD methodology is adequate to evaluate the RC&C."

Section 3.4 of the LAR states the following:

> **The request to allow the inclusion of the Limit Design Method is required because there is no equivalent method in the ACI 318-63 Code. The original design of the reactor cavity and compartment walls (RC&C walls) was based on the limit state of the reinforced concrete structure. Design forces and moments at the limit state, which were used to determine sizes and placements of reinforcing bars (rebar), cannot be replicated by any form of linear finite element analysis, herein called the Linear Design Method. They can only be computed by using non-linear (or step-wise linear) finite element analysis, herein called the Limit Design Method. While the Limit Design Method is able to reasonably reproduce the original design forces and moments at the limit state by simulating load redistribution behavior, the Linear Design Method is not.**

Please provide further clarification on the following items:

a. **Contrary to Section 3.4 of the LAR where it is requested to allow the use of the limit design methodology, the conclusion of Section 2.9 of the LAR states that the use of the USD methodology is adequate to evaluate the RC&C. Please clarify.**

<u>OPPD Response to 10a.</u>

The intent of the conclusion of Section 2.9 of the LAR was to indicate that the application of DIF, in accordance with ACI 349-97, would be beneficial for the reevaluation of the RC&C; however, the application of DIF may not necessarily be required for the reevaluation of the RC&C. The use of USD in conjunction with the Limit Design Method might produce satisfactory results for the RC&C reevaluation under the proposed licensing basis.

The conclusion of Section 2.9 of the LAR is silent concerning the use of the Limit Design Method. There was no intent to imply that the use of USD without the Limit Design Method would produce satisfactory results for the RC&C reevaluation. USD is a design methodology in ACI 318 and the Limit Design Method (LDM) is a general analysis approach the LAR requests for use to determine load distribution in a structure. Internal loads from LDM are used in USD for design.

b. **Section 3.4 of the LAR states that when the limit design method is applied, where flexure controls design of the RC&C walls, rotations of the walls in any yield zone must be less than the rotational capacity of the zone, as expressed by Equations 3.4.1 and 3.4.2 in Section C.3.4 of ACI 349R-97, Appendix C (ACI 349-97 Commentary).**

   The NRC staff notes that the premise of using the provisions of the ACI 349, Appendix C and the limit state design methodology hinges upon the member ductility at critical section(s) and consideration of limited plastic hinge rotation.

   i. **Please provide information related to ductility of the RC&C walls and reconciliation of reinforcing steel detailing requirements of ACI 349-97.**

   ii. **The LAR does not discuss/justify an appropriate acceptance criterion/limit for the rotational capacity of yield (plastic) hinge. Please clarify.**

   iii. **Partial adoption of a more up-to-date code (ACI 349) is not consistent with the industry practice. Please provide justification.**

OPPD Response to 10b.

ACI 349-97 is referenced to show precedence and how later codes ultimately adopted a similar approach. Attachment 1, Notes 1 provides justification and discusses acceptance criteria.

Ductility factors in ACI 349-97 will not be used in the analysis of the RC&C walls and thus reconciliation of the reinforcing steel detailing is not planned. Instead, rotations or maximum compressive strains due to bending at critical sections of the finite element model are checked against the rotational capacity or the concrete ultimate strain of 0.003 to confirm that they are less than the limits for critical sections to be ductile.

c. **It is the NRC staff's understanding that finite element analysis is used for the RC&C walls structural re-evaluation. Please provide a discussion relative to the application of the limit state design methodology as it relates to the RC&C walls and the applicable load combinations. The response should, as a minimum, include the description of (1) RC&C finite element model/analysis (element type, stress-strain relationship of concrete and reinforcing steel, type of nonlinearity associated with the RC&C wall analysis, incremental and iterative procedures used in the analysis, computer software, benchmarking and model validation, etc.); and (2) how the transverse shear forces and twisting moments, in addition to bending moments, are taken into account.**

OPPD Response to 10c.

The specific details of the methodology, design inputs, and assumptions are part of a formal calculation that supports the Operability Evaluation associated with the RC&C. That analysis can be provided if requested. In summary, the elastic design methodology leads to every section (member) being proportioned to provide adequate strength. See Attachment 1, Notes 2 for a summary of the approach. Though not explicitly codified, the ACI Code does contain provisions for adjustments to these simplified elastic analysis outcomes. In the 1963 Code this is addressed in Code section ACI 1502. The advent of sophisticated analysis tools for continuous statically indeterminate structures had not yet occurred. Forces can now be precisely followed (element by element) such that load redistribution can be irrefutably established with no need of simplifying, conservative assumptions. Limit design and yield line theory are used to safely design concrete structures and realize cost savings over the results produced by simplified, elastic member design. Transverse shear loads at all critical sections are checked against code allowables. Twisting moments are conservatively added absolutely to each of two normal bending moments.

d. **Please provide the pertinent RC&C force/moment demand versus capacity for individual load cases (e.g., seismic loads, compartmental pressurization) prior and subsequent to the application of limit state design methodology and identify critical load combinations and the areas of high demand.**

OPPD Response to 10d.

Since the analysis of the RC&C walls using the LAR conditions has not yet been performed no pertinent data are available at the point of time. However, the inelastic behavior of the RC&C walls is mainly due to compartmental pressurization, which is shown in the existing operability calculation mentioned in response to RAI 10(c). The RC&C walls exhibit elastic behavior in the primary load-carrying direction under all loads and load combinations including seismic loads except accident pressures. The major difference in the interaction ratios prior and subsequent to the application of limit state design methodology will be seen in the secondary direction due to load redistribution. For the explanation of why results prior and subsequent to the application of limit state design methodology are different, see the response to RAI #10 (f).

e. **The inelastic deformation/rotational capability of RC&C walls, adequate shear resistance in critical sections, and adequate reinforcement anchorage length to support the use of limit state design methodology have not been discussed in the LAR. Please provide a discussion with quantitative data related to these items.**

OPPD Response to 10e.

The acceptance criteria of the inelastic deformation/rotation of the RC&C walls are described in Attachment 1, Notes 1. Shear loads at all critical sections are checked against code allowable. If a wall section has shear loads greater than the allowable, a modification will be required. As explained in the response to RAI #6, as long as an existing anchorage (for rebar) meets the anchorage requirement in ACI 318-63 it is deemed acceptable to use the Limit Design Method (LDM). Since the analysis of the RC&C walls using the LAR conditions has not yet been performed, no quantitative data are available at this point.

f. **Considering the statement in Section 3.4 of the LAR, it is the NRC staff's understanding that the request to use limit state design methodology is being proposed for all load combinations applicable to the RC&C walls including the normal/service load combinations. The ACI 349 Code and NRC staff guidance (SRP Section 3.8.3, "Concrete and Steel Internal Structures of Steel or Concrete Containments, " and Section 3.8.4), referenced in this LAR, require elastic design for service load and seismic load conditions. Therefore, the request to use limit state design methodology for all load combinations has not been technically justified in this LAR. Please provide further information to demonstrate that this request is consistent with the industry codes/standards and the NRC staff regulatory guidance.**

OPPD Response to 10f.

The inelastic behavior of the RC&C walls is mainly due to compartmental pressurization. This is shown in formal calculation associated with operability of the RC&C. The calculation can be provided if requested.

Walls carry loads in two-way action. The original design of the RC&C walls at the Fort Calhoun Station (FCS) was based on the limit state of the reinforced concrete structure (i.e., accident pressure is carried primarily in the horizontal direction). This limit state cannot be replicated by any simple form of linear analysis. The design forces and moments at the limit state can only be computed by using step-wise linear finite element analysis, herein called the Limit Design Method, or by non-linear analysis. Attachment 1, Notes 3 shows an example problem to illustrate the concept of the Limit Design Method (LMD).

The step-wise linear analysis of the LDM requested in this LAR is justified by the following,

- The step-wise linear analysis consists of multiple steps, at each of which a linearly elastic model and gross-section properties of the elements are considered. The multiple steps are used primarily to track load redistribution rather than material inelasticity. Further, as allowed by Section 8.3 of ACI 349-97, the maximum effects of factored loads are determined by the theory of elastic analysis along with the use of simplifying assumptions for computing the relative flexural and torsional stiffnesses of columns, walls, floors, and roof system. The multiple steps in the step-wise linear analysis are used for tracking load redistribution and changes in the relative stiffnesses from step to step.

- Except for the fuel canal walls which need further analysis to determine if modification is required for hydrostatic loads when flooded, the RC&C walls exhibit elastic behavior in the primary load-carrying direction under all loads and load combinations including seismic loads except for loads associated with accident pressures.

- The RC&C walls were designed in accordance with ACI 318-63 and the time of their construction is well before ACI 349-97 was issued as the governing code for nuclear safety related concrete structures. ACI 318-89, which is a later edition of ACI 318-63, permits a seismic design based on loads corresponding to an inelastic response to strong ground motion earthquake if the design exhibits a robustness characterized by retention of substantial proportion of its strength as it is inelastically cycled. As explained in Section R21.2 of ACI 349-97 Commentary, ACI 349-97 recognizes that significant differences in design and structural forms exist in the applications of respective codes and adopts the high seismic risk provisions of ACI 318-89, Chapter 21. These later codes allow for a degree of inelasticity so long as rebar is fully developed by anchorage, maximum compressive strain of concrete is less than 0.003, and shear loads of all types are less than their respective allowable.

- In the elastic design, sizes and placements of reinforcing bars (rebar) are determined by internal forces and moments from a linear analysis. Since a linear finite element analysis is very much different from the simplified analysis by hand calculation performed for the RC&C walls back in 1960's (note: the document of the hand calculation is either incomplete or missing), it produces different internal forces and moments than were originally used for the design of the RC&C walls. For example, If OPPD were required to meet ACI 349-97's requirement of the elastic design based on a linear analysis, the RC&C walls would need modification. This is driven primarily by the differences in the design loads due to two different types of linear analyses. By using a step-wise linear analysis to replicate the original design forces and moments it is possible to capture the actual load redistribution behavior. In conclusion, the step-wise linear analysis is considered safe and appropriate for existing structures.

g. Considering the methodology of limit state design and formation of plastic hinge:

i. Please discuss the effects of change in stiffness on the dynamic characteristics of the RC&C walls, which may affect (1) the level of accelerations induced in the RC&C structure due to seismic loading; and (2) the structural response of the RC&C walls to the impulse loading due to compartmental pressurization.

ii. Please justify that the additional deformation/rotation, crack formation, and stiffness degradation of the RC&C wall structure, resulting from such an analysis approach, does not adversely affect those safety-related structures, systems, or components adjacent to or supported from the RC&C walls, including the component support anchorages.

OPPD Response to 10g.

RC&C walls under seismic loads act primarily as shear walls and their in-plane shear stiffnesses barely change. Even though out-of-plane bending stiffness of some of the walls does change, their fundamental frequencies still remain well above 3 Hz, which is the 1st soil-structure frequency of the dynamic stick model for the combined Containment Building, Internal Structure, and Auxiliary Building as described in USAR Appendix F. Their masses consist primarily of self-weights and are small relative to their stiffness. Therefore, (1) the effects of change in stiffness on accelerations induced in the RC&C structure due to seismic loading are insignificant, and (2) the USAR-specified maximum dynamic Load factor (DLF) of 1.5 due to compartmental pressurization applied in RC&C evaluation is conservative without considering the beneficial effect of dynamic response's decreasing with decreasing wall stiffness.

The major equipment supported by RC&C walls are the Reactor, the Steam Generators, the Pressurizer, and the Reactor Coolant Pumps. The additional deformation/ rotation, crack formation, and stiffness degradation of the RC&C walls due to the out-of-plane action do not adversely affect their safety function because support loads/reactions are in the plane of the supporting walls and in-plane shear stiffnesses of the supporting walls barely change. It is important to note that the additional deformation/rotation is still small, since it is limited by the acceptance criteria.

RAI-11

According to RG 1.142 (Reference 6.22 in the LAR), Regulatory Position 10.6, increase in the material strength (i.e., DIF) could be realized only when the material is subjected to very high strain rates of loading, normally associated with impactive/impulsive loadings. Section 3.4 of the LAR is not clear relative to the application of DIF to various load combinations. Please clarify.

OPPD Response

DIF will be used only for RC&C materials that are subjected to very high strain rates of loading. These loads are caused by rapid increases in differential pressure and jet impingement and are the result of the design basis High Energy Line Breaks (HELBs) accidents.

RAI-12

Section 2.9.2 of the LAR states that special seismic requirements for steel reinforcing detailing of ACI 349-97, Chapter 21 adds special detailing provisions for seismic that are not related to impactive or impulsive conditions.

Section 21.2.1.1 of ACI 349-97 states that the reinforcing bar detailing requirements of Chapter 21 shall be the design practice for nuclear plants within the purview of this code. In addition, the ACI 349-97 Commentary (Section R21.2) provides a discussion regarding the intent of Chapter 21.

Considering the above, the NRC staff does not consider the statement in Section 2.9.2 of the LAR consistent with the intent of ACI 349 Code. Please provide further clarification regarding the statement in Section 2.9.2 of the LAR.

OPPD Response

Dynamic Increase Factors (DIFs) are not in the existing code of record. ACI 349-97 is referenced only as a source for DIFs. A comparison between the design requirements of ACI 349-97 and ACI 318-63 is performed within LAR section 2.9 to justify the use of DIFs when considering impactive or impulsive load scenarios in the analysis of the RC&C. The intent of the statement in question was to note that the requirements of ACI 349-97 Chapter 21 need not apply when considering impactive or impulsive loading and therefore do not apply to the conditions of this request.

RAI-13

The mark-up of the USAR, Section 5.11 indicates changes to Section 5.11.3.2, "Operating Basis Load Combinations for Class I Steel Structures," and Section 5.11.3.3, "Design Basis Load Combinations for Class I Steel Structures." The scope of the LAR is related to concrete structures and the proposed changes to Section 5.11.3.2 and Section 5.11.3.3 are not discussed in the LAR. These changes are considered outside the scope of the submitted LAR and will not be reviewed. Please discuss and clarify this inconsistency in the LAR submittal.

OPPD Response

USAR Sections 5.11.3.2 and 5.11.3.3 will not be changed by this LAR. OPPD agrees that these sections are outside the scope of the LAR and need not be reviewed.

RAI-14

The mark-up of the USAR, Section 5.11.3.6 indicates that the use of DIF for RC&C comply with ACI 349-97, Appendix C. RG 1.142 has not been incorporated in this mark-up as discussed in the LAR. Please clarify.

OPPD Response

Based on review of the comment, the reviewer is correct. The Markup to USAR section 5.11.3.6 references ACI 349-97 Appendix C for DIF; the LAR write up also discusses the provisions of RG 1.142 being applicable (specifically LAR enclosure page 33).

OPPD agrees that in addition to ACI 349-97, RG 1.142 should have been included in the USAR section 5.11.3.6 markup.

Attachment 1

OPPD Response Notes

Attachment 1
OPPD Response Notes

Notes 1. Acceptance Criteria for a Ductile Section

To avoid brittle failure of a critical cross section, the maximum compressive strain due to bending must be less than the concrete ultimate strain of 0.003. If the finite element software used for modelling the RC&C walls can output the maximum compressive strain due to bending, the concrete ultimate strain of 0.003 can be used as the acceptance criteria. Otherwise, the rotational capacity derived below can be used as the acceptance criteria for rotations at critical sections,

Per Figure 1, curvature Ψ_u at the ultimate strength of a section is,

$$\Psi_u = \frac{\varepsilon_u}{c}$$

Where ε_u is the concrete ultimate strain (0.003) and c is the distance from the extreme compressive fiber to the neutral axis at the ultimate strength determined per ACI 318-63.

The rotational capacity r_u of a yield zone can be expressed by:

$$r_u = \Psi_u D_h$$

Where D_h is the length of the yield zone which can be determined from output of the finite element software. Rotations at critical sections of the RC&C walls must be less than r_u for the sections to preclude concrete failure.

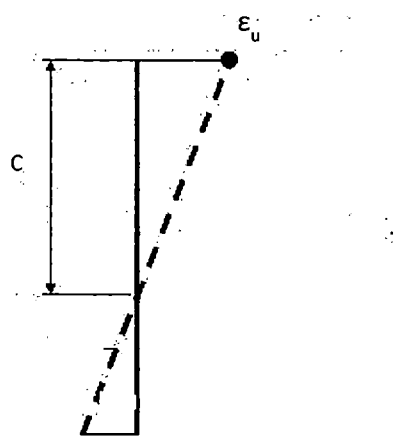

Figure 1 – Strain Distribution in a Section at Ultimate State

Notes 2. Limit Design Method (LDM)

The Reactor Cavity & Compartment (RC&C) walls at the Fort Calhoun Station (FCS) will be analyzed using a linear finite element model with a step-wise linear analysis procedure. The procedure is illustrated using the simple example shown in Figure 2. The top of the figure shows a structure consisting of three springs in parallel. For convenience, the springs' stiffnesses are assumed equal, but they vary in strength from F/4 to F. Model 1 consists of all three springs. In Step 1, the model is loaded until the strength of the weakest spring (top spring) is reached. This would be the end of a linear analysis, achieving a capacity of 0.75F. The nonlinear analysis proceeds by removing the top spring and applying a load increment until the residual capacity of the next weakest spring (the bottom spring) is reached (see Model 2). At the end of Step 2, both the top and bottom spring have reached their maximum strength and a load of 1.25F has been applied. Implicit is the assumption that the top spring has sufficient ductility to maintain the F/4 load through the additional displacement. The analysis continues by removing the lower spring (Model 3) and applying another load increment required to use up the residual strength of the strongest (middle) spring. At the end of Step 3, all three springs are at their maximum strength and a load of 1.75F has been achieved. This method is called Limit Design Method (LDM), which is similar to the Yield Line Theory widely used for slabs in industry.

The RC&C walls are modeled using the finite element model (FEM). The elements are organized into groups, each of which has same rebar design and same wall thickness in the same wall plane. When elements reach their capacities, their stiffnesses are set to a small number and the analysis proceeds to the next step. In general, each group of elements is loaded primarily in one direction. The use of the step-wise linear analysis procedure allows the stiffness in the direction of rebar yielding to be set to a small value at the end of an analysis step; the other direction may continue to take load as the analysis proceeds.

The criteria for 'removing' elements with yielding rebar is per the code of record ACI 318-63. The mechanics of the computation required for RC&C wall analyses are briefly detailed as follows: at each step, the load combination being evaluated is applied to the linear finite element model. The amplitude of the load combination is essentially arbitrary. The element force/moments are then dumped into a database which also houses the results from the previous steps. The analyst guesses a scale factor to be applied to the current model's analysis results; the results are then combined with those of the previous steps (whose loading scale factors have already been established) and the results are checked against ACI code requirements. The scale factor is then adjusted up or down until one or more elements is at the code limits. A new model is then created in which the stiffness for those elements reaching code limits is set to a small number, and the analysis continues. The analysis stops if enough elements are 'removed' so that small increases in loads result in large increases in displacements. Otherwise, it will continue until 100% of load is applied.

The method described above will be applied to the following No-Loss of Function load combinations for RC&C walls, as required by FCS USAR,

$$U = 1.0D + 1.0E'$$
$$U = 1.0D + 1.0L + 1.0E'$$
$$U = 1.0D \pm 0.05D + 1.5Pc + 1.0Tc$$
$$U = 1.0D \pm 0.05D + 1.25Pc + 1.25E + 1.0Tc$$
$$U = 1.0D \pm 0.05D + 1.0Pc + 1.0E' + 1.0Tc$$

In the above load combinations, D and L refer to Dead and Live Loads, Tc to thermal load caused by temperature gradient across the concrete section, Pc to accident pressure loading, E to Operating Basis Earthquake (OBE) loading, and E' to Maximum Hypothetical Earthquake (MHE) loading. It is important to note that no reduction in seismic demand is allowed.

The method will also be applied to the following Normal/Operating Service Load combinations requested in the LAR,

$$U = 1.4D + 1.7L$$
$$U = 1.0D \pm 0.05D + 1.25L + 1.25E$$

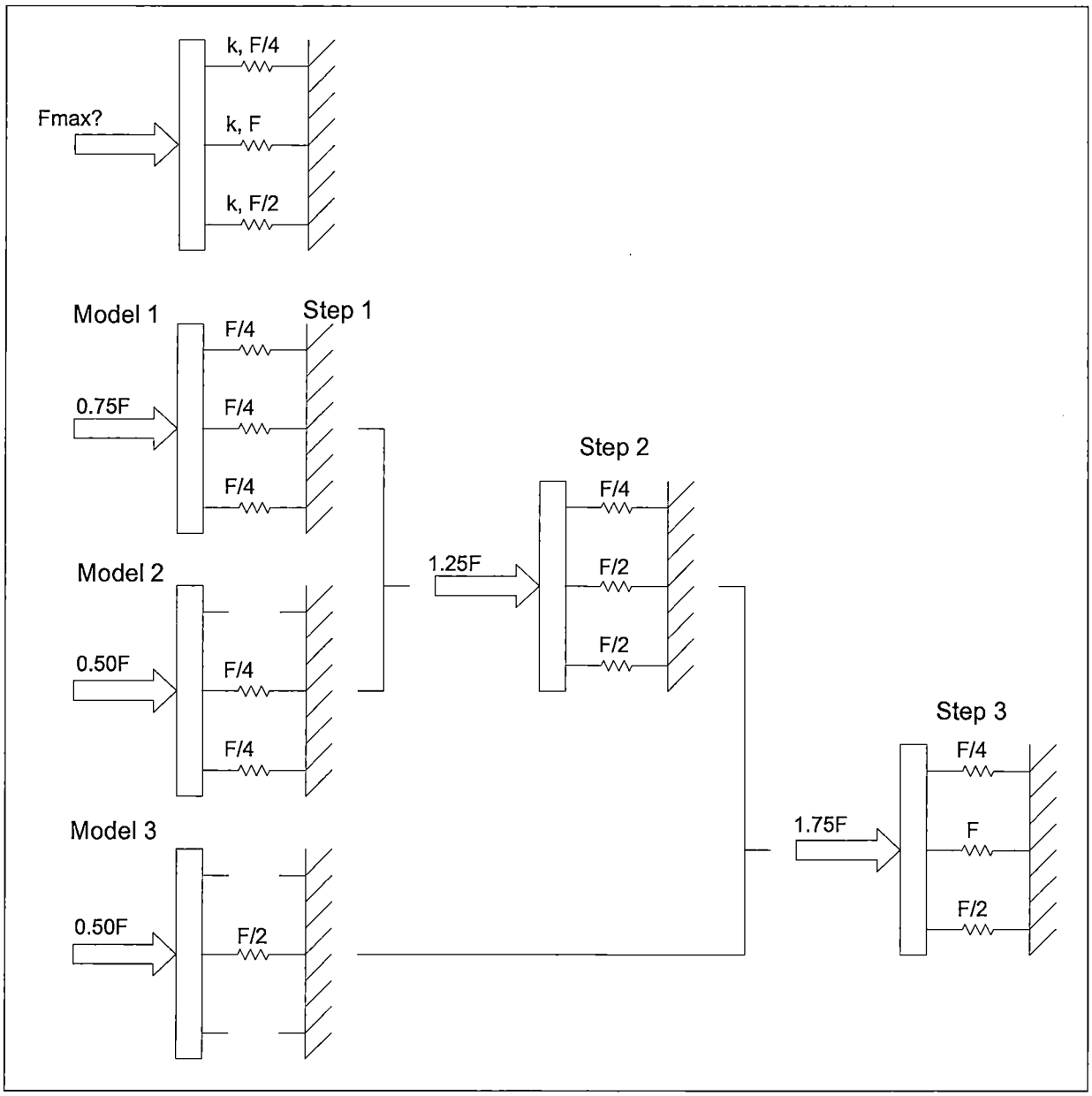

Figure 2 - Schematic of Step-Wise Linear Analysis Procedure

Notes 3. Example Problem Solve by Limit Design Method (LDM)

Shown below is a one-way slab with all sided fixed.

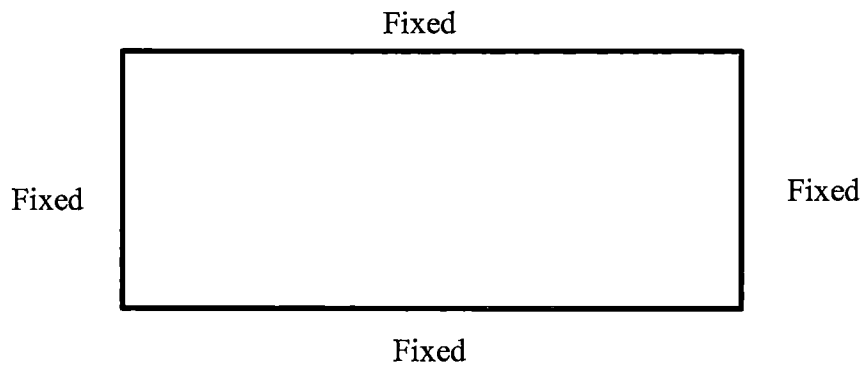

In the design of the slab, the reinforcing bars (rebar) required in the short direction are determined by designing a unit-wide beam and small (minimal) temperature rebar is used in the long direction. In a linear finite element analysis of this one-way slab, the slab is commonly shown overstressed along the short sides since the calculated moment about the short side is greater than moment capacity provided by minimal temperature rebar. This implies the slab is under-designed and additional rebar is needed in the long direction. Actually, the main rebar in the short direction is perfectly capable of picking up all of the loads and redistributes them to the short direction after the temperature rebar yields. While a linear finite element analysis is not capable of showing this sequence of load redistribution behavior, the redistribution behavior is correctly simulated by a step-wise linear finite element analysis or a non-linear analysis.

Attachment 2
Steel Reinforcement Statistics

#	Order #(s)	Heat #	Bar Size	Supplier CMTR Steel Strength (ksi)	Independent Test Agency Strength (ksi)	Average Test Strength (ksi)	Std Dev (ksi)	Mean (ksi)	95% (ksi)	Coefficient of Variation
1	F-5228	14049	3	44.64		44.64	3.77	49.29	43.10	0.08
2	F-5500	14657	3	52.81		52.81				
3	F-63X4	14598	3	53.18		53.18				
4	F-63X8, F-6387, F-6390	15371	3	46.54		46.54				
5	F-9343	16359	3							
6	2790	32720	4	50.00		50.00	3.33	50.11	44.62	0.07
7	F-3922	26209	4	49.75	51.50	50.63				
8	F-4997	C29170	4	57.00		57.00				
9	F5228	A29428	4	52.00		52.00				
10	F-5499	34016	4		47.00	47.00				
11	F-6384	34043	4	50.00		50.00				
12	F-6385	34026	4	48.75		48.75				
13	F-6388	S3327	4	56.49		56.49				
14	F-7154	27795	4	45.50	48.00	46.75				
15	F-7153	M9161765	4	45.50		45.50				
16	F-8245, 8246, 828	15699	4	49.75		49.75				
17	F-7897, 8247	27799	4	47.25		47.25				
18	F-8924	27794	4	50.25		50.25				
19	F-9343	16111	4							
20	F-3922	14510	5	49.84	49.70	49.77	3.94	51.89	45.41	0.08
21	F-4987	33520	5	48.39		48.39				
22	F-5231	14710	5	50.65		50.65				
23	F-5492	33351	5	51.61		51.61				
24	F-6384	S3203	5	51.50		51.50				
25	F-6385	S3245	5	51.34		51.34				
26	F-6388	S1674	5	54.60		54.60				
27	F-6384, 6392, 7151, 7148	S3398	5							
28	F-6386	S3464	5	58.18		58.18				
29	F-7154	S3452	5	51.17		51.17				
30	F-7153	28078	5	47.74		47.74				
31	F-8246	34697	5	48.55		48.55				
32	F-8247	16209	5	47.75		47.75				
33	F-8249	S3954	5	53.13		53.13				
34	F-8924	16463	5	62.10		62.10				
35	F-9343	40098	5							
36	2790	32678	6	48.41		48.41	4.00	50.84	44.25	0.08
37	2791	S1534	6	49.78		49.78				
38	F-3922	M9160732	6	47.04	45.00	46.02				
39	F-4987	33377	6	50.11		50.11				
40	F-3921	32853	6	48.52		48.52				
41	F4988	M9151167	6	45.80		45.80				
42	F-6383	S2552	6	56.12		56.12				
43	F-6384	S2477	6	53.86		53.86				
44	F-6385	14805	6	57.05		57.05				
45	F-6388	S2547	6	59.97		59.97				
46	F-6387	S3195	6	54.31		54.31				
47	F-7153	34515	6	48.41		48.41				
48	F-8245	40100	6	49.09		49.09				
49	F-8246	30100	6	49.09		49.09				
50	F-7897	40100	6	49.09		49.09				
51	F-8924	40196	6	47.84		47.84				
52	2790	M9030377	7	45.33		45.33	4.90	49.16	41.10	0.10
53	2791	M9020322	7	44.50	44.70	44.60				
54	F-4987	13995	7	44.00	41.67	42.84				
55	F-5228	14013	7	44.91		44.91				
56	F-6384	S2395	7	54.06		54.06				

#	Order #(s)	Heat #	Bar Size	Supplier CMTR Steel Strength (ksi)	Independent Test Agency Strength (ksi)	Average Test Strength (ksi)	Std Dev (ksi)	Mean (ksi)	95% (ksi)	Coefficient of Variation
57	F-6385	S2396	7	55.06		55.06				
58	F-6388	S2775	7	54.39		54.39				
59	F-6387	H-49834	7	55.00		55.00				
60	F-7154	34207	7	47.50	45.67	46.59				
61	F-7153	34181	7	46.25		46.25				
62	F-8246	34391	7	55.75		55.75				
63	F-7897, 8247	34225	7	45.17		45.17				
64	F-9343	40193 or 40113	7							
65	2790	26058	8	49.93		49.93	2.43	51.71	47.71	0.05
66	F-3922	M9150780	8	49.31	42.40	45.86				
67	F-X987	14058	8	50.18		50.18				
68	F-3921	S0890	8	51.31		51.31				
69	F-6383	S2902	8	52.33		52.33				
70	F-XXXX	S2857	8	54.75		54.75				
71	F-6385	S2901	8	52.58		52.58				
72	F-6XXX	S2907	8	52.84		52.84				
73	F-6384AD, F-8539	S2199	8	51.31		51.31				
74	F-7501	X597	8	55.28		55.28				
75	F-7897, 8247	S2198	8	52.46		52.46				
76	F-9343	27878	8							
77	2790	S1313	9	49.66		49.66	2.24	50.75	47.07	0.04
78	2791	S1317	9	50.03		50.03				
79	F-6384, 7898	27446	9							
80	F-6XX5, 6XX6, 6384AD	S2316	9	53.80		53.80				
81	F-63XX	S2196	9	50.40		50.40				
82	F-6387	S2166	9	53.80		53.80				
83	F-7154	S2172	9	54.30		54.30				
84	F-6XXX 2	S2318	9							
85	F-7153	S2747	9	52.00		52.00				
86	F-8344	27441	9	47.66		47.66				
87	F-7897, 8247	33589	9	49.06		49.06				
88	F-XXX4	27415	9	49.03		49.03				
89	F-9343	34495	9							
90	F-895	34052	9	48.50		48.50				
91	2791	S0027	10	52.15		52.15	3.00	49.86	44.93	0.06
92	F-X922	12011	10	46.99	46.10	46.55				
93	F-4987	S2283	10	52.30		52.30				
94	26834	S1815	10	50.17		50.17				
95	F-5228	S1804	10	51.55		51.55				
96	F-6386	13515	10	53.18		53.18				
97	F-6388	S2962	10	53.25		53.25				
98	F-7897, 8247, 8566, 8476A	34375	10	44.47		44.47				
99	F-8924	34714	10	48.50		48.50				
100	F-897	34383	10	46.50		46.50				
101	899Add	25091	11	48.04		48.04	2.47	48.78	44.71	0.05
102	2791	S9829	11	48.25		48.25				
103	3496	S9832	11	53.36		53.36				
104	F-3922	M9150787	11	50.03	45.20	47.62				
105	F-3505Add	XX256	11	45.96		45.96				
106	F-4987	S2218	11	51.96		51.96				
107	F-5228	M9161343	11	56.66	42.63	49.65				
108	F-6383	M9151340	11	44.39		44.39				
109	F6387	S2833	11	51.38		51.38				
110	F-7153	15423	11	46.90		46.90				
111	F-8244	M9150771	11							
112	F-7897	16023	11	49.02		49.02				
113	F-9343, F-703AD	40178	11	46.82		46.82				
114	F-897	27907	11	50.80		50.80				

#	Order #(s)	Heat #	Bar Size	Supplier CMTR Steel Strength (ksi)	Independent Test Agency Strength (ksi)	Average Test Strength (ksi)	Std Dev (ksi)	Mean (ksi)	95% (ksi)	Coefficient of Variation
115	F-3922AD2	14149	14	51.38		51.38	0.00	51.38	51.38	0.00
								Min:	41.10	
								Max:	51.38	

SAMPLE POPULATION STANDARD DEVIATION, σ = 3.61
SAMPLE MEAN, μ = 50.38
SINGLE TAIL 95% CONFIDENCE, $\mu - 1.645\sigma$ = 44.44
COEFFICIENT OF VARIATION = 0.07