OFFICE OF INSPECTION AND ENFORCEMENT
DIVISION OF INSPECTION PROGRAMS

Report Nos.: 50-269/86-16; 50-270/86-16; and 50-287/86-16

Licensee: Duke Power Company
422 Church Street
Charlotte, NC 28242

Docket Nos.: 50-269, 50-270, 50-287

License Nos.: DPR-38, DPR-47, and DPR-55

Facility Name: Oconee Nuclear Station

Inspection Conducted: May 5 - June 11, 1986

Inspectors:

T. O. Martin — 7/24/86
*T. O. Martin, Inspection Specialist, IE, Team Leader — Date

J. E. Dyer — 7/28/86
J. E. Dyer, Inspection Specialist, IE — Date

M. R. Johnson — 7/28/86
M. R. Johnson, Reactor Operations Engineer, IE — Date

T. O. Martin for — 7/24/86
*F. R. McCoy, III, Reactor Inspector, Region II — Date

R. C. Pierson — 7/24/86
R. C. Pierson, Inspection Specialist, IE — Date

A. H. Saunders — 7/28/86
A. H. Saunders, Inspection Specialist, IE — Date

C. G. Walenga — 7/28/86
C. G. Walenga, Inspection Specialist, IE — Date

Accompanying Personnel: *L. J. Callan, *H. J. Miller

Contractors: E. T. Dunlap, *G. W. Morris, *G. J. Overbeck

Approved by:

Phillip F. McKee — 7/29/86
Phillip F. McKee, Chief, Operating Reactor Programs Branch, IE — Date

*Present during the exit interview on June 11, 1986.

SCOPE: This special, announced team inspection was performed to provide an in-depth assessment of the operational readiness of the emergency feedwater systems of all three Oconee units. The licensee's operational readiness and management controls were reviewed in five functional areas, primarily as they related to the emergency feedwater system. The functional areas reviewed were:

- Maintenance
- Operations
- Surveillance and Testing
- Design Changes and Modifications
- Quality Assurance

RESULTS: Twenty-three potential enforcement findings, identified in this report as unresolved items, and four open items will be followed up by the NRC Region II Office.

1. INSPECTION OBJECTIVE

The objective of the team inspection at Oconee was to assess the operational readiness of the emergency feedwater (EFW) system by determining whether:

1. The system was capable of performing the safety functions required by its design basis.

2. Testing was adequate to demonstrate that the system would perform all of the safety functions required.

3. System maintenance (with emphasis on pumps and valves) was adequate to ensure system operability under postulated accident conditions.

4. Operator and maintenance technician training was adequate to ensure proper operations and maintenance of the system.

5. Human factors considerations relating to the EFW system (e.g., accessibility and labeling of valves) and the system's supporting procedures were adequate to ensure proper system operation under normal and accident conditions.

2. SUMMARY OF SIGNIFICANT INSPECTION FINDINGS

The more significant findings pertaining to the functionality of the Oconee Nuclear Station safety systems are summarized below. Section 3 provides the detailed findings pertaining to the five major functional areas evaluated. The observation numbers appearing in parenthesis after the individual items summarized are provided for reference to the corresponding discussions in Section 3. Figure 1 on page 17 shows the steam supply piping for a turbine-driven EFW pump. Figure 2 on page 22 shows a simplified EFW system arrangement.

2.1 Emergency Feedwater (EFW) System Functional Concerns

2.1.1 Use of the Motor-Driven EFW Pumps for Long-Term Cooling

(1) The motor-driven EFW pumps in Units 2 and 3 were able to directly access only about 3,000 gallons of water in the condenser hotwells at nominal operating level. The FSAR stated that the upper surge tank (UST) contains a nominal 50,000 gallons of water and that the condenser hotwell contains 120,000 gallons of water for EFW supplies. However, assuming for Units 2 or 3 a loss of the turbine-driven EFW pump, a source of EFW cannot be assured beyond approximately 100 minutes (at a nominal 500 gpm) without the use of non-safety-related pumps to replenish the UST. [3.2.2(1)]

(2) The motor-driven EFW pumps in all three units were unable to take a suction on the condenser hotwell with a vacuum. However, if the condenser vacuum was broken, the plant may be unable to cool down by bleeding steam from the steam generators (SGs). The condenser steam dump valves cannot dump steam to the condenser without a vacuum, and the handwheel-operated atmospheric dump valves (12-inch gate valves) had apparently never been demonstrated to be capable of being opened at high differential pressures. [3.2.2(2)]

2.1.2 Turbine-Driven EFW Pump Reliability

(1) A portion of the steam supply piping to the turbine-driven EFW pump was designed for 350 psig. Steam regulating valve MS-87 upstream of this piping was designed to fail open on a loss of air and backup nitrogen supply, both of which were not safety-related. Relief valve MS-92 downstream of MS-87 was undersized such that if MS-87 failed open, the steam line could be pressurized above its design rating. [3.4.4]

(2) From April 1984 to February 1986, there were a significant number of corrective-maintenance work requests (11) relating to the speed control of the Unit 3 EFW pump turbine. [3.1.4(1)]

2.1.3 No Runout Protection for EFW Pumps

An analysis conducted by the licensee during the inspection revealed that EFW pump runout (pump flow beyond design levels possibly leading to cavitation and high vibration) could occur during normal EFW actuation at SG pressures as high as 700 to 900 psig as long as EFW flow control valves FDW-315 and FDW-316 remained full open. Conditions leading to runout would be worse if the EFW flow control valves failed open as designed or if a main steam or feed line break were to occur. Such an analysis on pump runout had not previously been performed by the licensee. [3.4.3]

2.1.4 EFW System Reliance on Non-Safety-Related Equipment

Operator reliance on instrumentation and control equipment that is not safety related was extensive. UST level indication and alarms, pneumatic operators and supplies for the EFW flow control valves and steam regulating valves (for turbine-driven EFW pumps), and EFW system valve motor operators were classified as not safety related. The inspection team determined that the licensee's maintenance practices and design activities were significantly less rigorous for non-safety-related equipment. The inspection team was concerned that these lower standards were applied to the non-safety-related equipment important to the operation of the EFW system. [3.4.10, 3.1.2(1)]

2.1.5 Reliability of Nitrogen Backup System for EFW Air-Operated Valves

(1) Backup nitrogen systems that are not safety related were provided for the EFW flow control valves FDW-315 and FDW-316 and for the regulating valves MS-87, MS-126, and MS-129 that supply steam to the turbine-driven EFW pumps. The licensee committed to providing 2-hour backup nitrogen systems. The nitrogen supply systems for flow control valves FDW-315 and FDW-316 were sized based on a 1-hour operating criteria. No design analyses were available providing the sizing basis for the steam pressure regulating valves. [3.4.6]

(2) Post-installation testing was considered inadequate for these backup nitrogen systems because this testing only demonstrated that the nitrogen systems were capable of positioning the control valves under no flow conditions. [3.3.5]

(3) No periodic testing was done to demonstrate the capability of these nitrogen systems. [3.3.5]

(4) Unlabeled, undesignated, and apparently uncontrolled isolation valves were found in these nitrogen systems. [3.2.3]

2.1.6 Ability of EFW System to Respond to a Main Steam Line Break

Check valves MS-83 and MS-85 in the turbine-driven EFW pump steam supply lines were not tested in the backflow direction. Normally open isolation valves MS-82 and MS-84 had valve operators that were not safety related and, in some cases, 3MS-84 was not properly maintained [3.1.3(2)]. A main steam line break with a failure of check valve MS-83 or MS-85 to backseat could result in the blowdown of two SGs and the loss of the turbine-driven EFW pump. [3.3.2]

2.1.7 Ability of the EFW System to Respond to a Seismic Event

(1) The FSAR stated that the EFW system is capable of withstanding a maximum hypothetical earthquake (equivalent to the safe shutdown earthquake). As identified by the licensee in LER 86-002 dated March 5, 1986, substantial portions of the EFW system were not seismically qualified. [3.4.1]

(2) The safety-related batteries for the Keowee hydroelectric plant standby power supplies were found to be improperly installed to meet seismic requirements. The failure of these power supplies could result in a complete loss of emergency ac power. [3.4.2(1)]

2.2 Other Decay Heat Removal Systems Functional Concerns

Although an extensive review was not conducted of other decay heat removal systems, some concerns in this area were identified.

2.2.1 Primary System Feed and Bleed Cooling

This heat removal process relies on a supply of water from the high-pressure injection pumps and a bleed path through the pressurizer power-operated relief valve (PORV) and the PORV block valve. Both the PORV and PORV block valve were found to be not environmentally qualified. [3.2.2(2)] The inspection team identified three instances where the PORV block valves were seated to prevent leakage during plant operations. This process used an insulated stick to manually shut the motor contacts, bypassing the torque switch, and applying full motor torque to seat the valve. The inspection team was concerned that the PORV block valve could be damaged or stuck shut in the process. [3.1.3(3)]

2.2.2 Auxiliary Service Water (ASW) System

(1) This single pump system was designed to supply lake water at low pressure (approximately 85 psig) to the SGs of all three units. The routine testing conducted on the ASW pump was considered inadequate. The performance test did not record suction pressure, discharge pressure, or flow. [3.3.7]

(2) The ASW system relied on the handwheel-operated atmospheric dump valves (12-inch gate valves) to depressurize the SGs. These valves had apparently never been demonstrated to be capable of being opened under high differential pressure conditions. [3.2.2(2)]

2.2.3 Standby Shutdown Facility (SSF) ASW System

(1) This single-pump system was designed to supply lake water at high pressure to the SGs of all three units. Design analyses were not available and testing apparently had not been conducted to demonstrate that sufficient SSF ASW pump head was available to meet decay heat removal flow requirements to multiple SGs. [3.4.7(2)]

(2) The SSF ASW system was not single-failure proof. This was significant because the EFW system may not be capable of withstanding a maximum hypothetical earthquake. [3.4.1]

2.3 Programmatic and Functional Concerns Potentially Affecting the Operation of All Systems

2.3.1 Motor-Operated Valve Maintenance Program

(1) The lubrication program for motor-operated valves (MOVs) did not adequately control lubricants or provide coverage for all safety-related and environmentally qualified valves. [3.1.1]

(2) The program for control of MOV torque switch and limit switch set points was considered inadequate due to reliance on skill of the craft to establish critical switch settings, inadequate procedures, lack of testing under differential pressure conditions, and repetitive failures. [3.1.2, 3.1.3]

(3) The overall maintenance program was considered weak because of the repetitive equipment failures that were identified and because the corrective maintenance activities did not appear to identify or correct the cause of the failure. [3.1.3, 3.1.4]

2.3.2 Design Change Process

(1) Some modifications were done without related critical design analyses being performed or completed. [3.4.7, 3.4.8]

(2) The licensee's design engineering group, in some cases, did not provide post-modification testing requirements. Personnel performing post-modification testing were not required to consult with the design engineers responsible for the modifications. Several examples were found of weak post-modification testing. [3.3.4, 3.3.5]

(3) Examples were found of apparently incorrect or missing safety-related classification of instrumentation. [3.4.11]

(4) The programmatic design requirements of ANSI N45.2.11 were not adequately implemented into the licensee's design change program. [3.4.9]

(5) The program governing safety evaluations performed in accordance with 10 CFR 50.59 was considered generally weak. Examples were found of inadequate safety evaluations. [3.4.12]

3. DETAILED INSPECTION FINDINGS

3.1 Maintenance

The team reviewed the maintenance procedures, equipment history, and the existing material condition of emergency feedwater (EFW) systems at all three Oconee units. The inspection of motor-operated valve (MOV) maintenance was expanded to include valves in other safety systems. Several deficiencies were identified with the licensee's maintenance practices, particularly with MOV maintenance.

3.1.1 Lubrication Program for Motor-Operated Valves

The licensee's lubrication program for MOVs did not adequately control lubricants or provide coverage for all environmentally qualified MOVs. Procedures had been developed for replacing grease during MOV refurbishment and for periodic inspection and lubrication of MOVs. However, these procedures appeared to have significant deficiencies and were not always implemented properly.

(1) The licensee had used improper grease to lubricate Limitorque MOVs inside the containment. The Limitorque vendor manual stated that Nebula EP-Ø and EP-1 were the only approved lubricants for MOVs inside the containment. However, licensee maintenance procedures for MOV refurbishment did not identify special lubrication requirements for containment MOVs and Procedure OP/O/A/1103/25, "Lubrication Procedure," Change 26, incorrectly directed that MARFAK Ø grease be used for periodic lubrication of several containment MOVs with Limitorque operators. The team conducted a partial review of the licensee's lubrication records and identified where MARFAK Ø grease had been added to the following containment MOVs:

Unit	Valve No.	Description	Date Added
3	CS-5	Quench Tank Suction	8/30/85
1	FDW-105	SG 1A Sample	3/24/86
1	FDW-107	SG 1B Sample	3/24/86
1	HP-3	Letdown Cooler 1A Isolation	3/24/86
1	HP-4	Letdown Cooler 1B Isolation	3/24/86
1	HP-20	RC Pump Seal Return Isolation	3/24/86
1	GWD-12	Quench Tank Vent	3/21/86
3	GWD-12	Quench Tank Vent	8/14/85
3	RC-6	Pzr. Water Space Sample	8/30/85
3	PR-1	Reactor Bldg. Purge Outlet	8/30/85
3	PR-6	Reactor Bldg. Purge Outlet	8/30/85
3	PR-7	Reactor Bldg. Rad Monitor Sample	8/30/85
3	PR-9	Reactor Bldg. Rad Monitor Sample	8/30/85

The Limitorque vendor manual stated that specific operators with serial numbers up to 295809 were shipped with a standard lubricant of Sun Oil 50EP. The licensee stated that it had containment MOVs from this group and that the Sun Oil 50EP lubricant apparently had not been replaced. The basis for the licensee's deviation from the vendor manual apparently was a January 18, 1986, letter to the licensee from Limitorque Corporation.

This letter stated that irradiation of Sun Oil 50EP to 225 Mrad gamma had little significant effect on its lubrication qualities. The team was concerned that the letter did not address all aspects of environmental qualification and did not explicitly state that Sun Oil 50EP was approved for use in nuclear containment MOVs.

(2) The licensee had apparently mixed lubricants with different chemical bases in environmentally qualified MOVs. The Limitorque vendor manual prohibited adding greases with different soap bases without the lubricant manufacturer's permission and stated specifically that Sun Oil 50EP could not be mixed with Nebula EP-Ø. Limitorque MOVs apparently had been lubricated with three different greases, each with a different chemical base: Nebula EP with a calcium base, MARFAK Ø with a sodium base, and Sun Oil 50EP with a lithium lead base. Procedure OP/O/A/1103/25 provided guidance for periodically adding either MARFAK Ø or Nebula EP grease to specific MOVs, but no evidence was available to demonstrate that the periodically added grease was compatible with the existing grease. Additionally, the procedure provided no direction for adding Sun Oil 50EP grease to MOVs that were originally filled with this standard lubricant. It appeared that the licensee implemented its periodic lubrication program for environmentally qualified MOVs with no apparent regard for mixing grease.

During the review of licensee lubrication records, the team also identified an instance where the existing lubrication procedure was not properly implemented, which resulted in an incorrect grease being added to safety-related, environmentally qualified MOVs. On August 14, 1985, the Unit 3 suction valves, 3HP-24 and 3HP-25, from the borated water storage tank for high-pressure injection pumps A and C were lubricated using MARFAK Ø grease when Procedure OP/O/A/1103/25 required the use of Nebula EP grease.

The team was concerned that mixing greases with different chemical bases could react to form a compound that would not have sufficient lubricating qualities to permit proper MOV operation.

(3) The following environmentally qualified Limitorque MOVs were omitted from the licensee's periodic lubrication program described in procedure OP/O/A/1103/25:

Unit	Valve	Description
1, 2, 3	CC-7	Component cooling water return from reactor coolant pump (RCP)
1, 2, 3	LP-12	Low pressure injection cooler A inlet
1, 2, 3	LP-14	Low pressure injection cooler B inlet
1, 2, 3	LPSW-6	Low pressure service water supply to RCP coolers
1, 2, 3	LP-103	Boron dilution
1, 2, 3	LP-104	Boron dilution
1	LP-105	Boron dilution
1, 2, 3	PR-59	Hydrogen recombiner inlet
1, 2, 3	PR-60	Hydrogen recombiner outlet

The Limitorque vendor manual recommended that MOV gearcase grease be inspected for quality, quantity, and consistency approximately every 18 months or 500 cycles, whichever occurred first. It appeared that this inspection interval had been exceeded for these valves. During the inspection, the licensee could not determine when these MOVs had last been inspected for their lubrication properties.

The discrepancies in the MOV lubrication program that are described above appear to degrade the environmental qualification and operability of MOVs within the station. Interviews with licensee maintenance personnel revealed that the licensee had initiated a MOV refurbishment program that would resolve these lubrication problems. This program intended to refurbish all MOVs at the three Oconee units during the next 5 years and replace the various MOV lubricants currently being used with the Nebula EP grease. During the Unit 1 outage completed in March 1986, the licensee refurbished approximately 45 safety grade and control-grade MOVs. The team was concerned that this schedule would not aggressively correct the identified lubrication problems. Additionally, the current licensee maintenance procedures, which did not specify the exclusive use of Nebula EP grease during MOV refurbishment, seemed inconsistent with these intentions.

The overall inadequacy of the licensee's MOV lubrication program and the inspection team's resulting concerns regarding the operability of these MOVs were discussed at a meeting between NRC and licensee management on June 10, 1986 at the Oconee Nuclear Station. The licensee's justification for continued operation was discussed and further information for the evaluation of this issue was requested by the NRC Region II Office. The apparent breakdown in the licensee's program for MOV lubrication will remain unresolved pending followup by Region II (50-269, 270, 287/86-16-01).

3.1.2 MOV Torque Switch and Limit Switch Set Points

Significant weaknesses were identified with the licensee's control of MOV torque switch and limit switch set points.

(1) A review of several EFW system MOV work requests revealed that procedures were infrequently referenced for MOV switch maintenance. The licensee's detailed maintenance procedures were usually implemented only for safety-related MOVs and the Oconee Nuclear Station Quality Standard Manual for Structure, Systems and Components, Revision 11, classified all EFW system MOV operators as not safety related.

(2) Torque switches and limit switches for safety-related MOV operators were adjusted under static flow conditions and not tested to determine whether they would operate properly under design differential pressures. During the inspection, the licensee could not provide any evidence to indicate that current torque and limit switch set points were adequate based on engineering analyses or test results.

(3) The closed limit switches for Limitorque MOVs were set based on when the maintenance technician felt the valve unseat as described in Procedure IP/0/A/3001/10, "Maintenance of Limitorque Valve Operators," Change 20. This limit switch controls the amount of valve stem travel for the torque

switch bypass and allows the MOV to come off its shut seat without tripping on high torque. The setting of this limit switch is critical to proper MOV operation and requires additional criteria that should be based on engineering judgment or test results rather than skill of the craft.

(4) The closed limit switches for Rotork MOV operators were set to actuate either 1 turn or 1 inch off the valve seat as described in Procedure IP/0/A/3001/02, "Setting Torque and Limit Switches on Rotork Valve Operators," Change 5. The decision on which limit to apply was left to the maintenance technician. Again, the team was concerned that this practice may not provide adequate torque switch bypass protection for the MOVs.

(5) Torque switches for Limitorque MOVs were initially set as low as possible while still assuring tight shut off and proper valve travel under no flow conditions as described in Procedure OP/0/A/3001/10. Interviews with licensee personnel revealed the switches would be subsequently adjusted higher during corrective maintenance after operational problems were identified. Consequently, it appeared that current torque switch set points had evolved to their existing values at the expense of operational problems.

The licensee had initiated a program for recording MOV torque switch set points as part of electrical preventive maintenance in accordance with Procedure IP/0/A/3001/1, "Electrical Preventive Maintenance Procedure for Limitorque Operators," Change 15. However, interviews with maintenance personnel revealed that these values were not being compared to minimum recommended values based on the manufacturer's testing or analyses. This problem had been previously addressed in IE Information Notice 84-10, "Motor-Operated Valve Torque Switches Set Below the Manufacturer's Recommended Value." The licensee's internal response to this notice stated that engineering analyses were used to determine minimum values for torque switches instead of vendor recommendations and that actual torque switch set points were made 1.0 units above this engineered value. Interviews with maintenance personnel and a review of existing procedures revealed that this response was not consistent with current or past licensee practices and procedures. Additionally, interviews with station maintenance personnel responsible for MOV torque switch settings revealed that they were not aware of this internal response to the IE notice.

The weaknesses identified above were evidence of an inadequate program for maintenance and testing of MOVs. Licensee maintenance procedures did not provide adequate guidance for setting torque switch or limit switch set points. This activity is not considered by the inspection team or general industry practice to be within the skill of the trade for maintenance technicians. The failure to provide adequate procedures for setting torque switch and limit switch set points will remain unresolved pending followup by Region II (50-269, 270, 287/86-16-02).

The licensee's response to IE Bulletin 85-03, "Motor-Operated Valve Common-Mode Failure During Plant Transients Due to Improper Switch Settings," addressed some of the concerns raised by the inspection team. However, this response commits to a long-term improvement program to be implemented by November 1987 and applies to only 14 MOVs in each unit at the Oconee Nuclear Station. Initial Motor-Operated Valve Analysis and Testing System (MOVATS) testing of

nine safety and control grade MOVs during the last Unit 1 outage revealed approximately five torque switch problems and four limit switch problems. These results appear to confirm the inspection team's concerns about the licensee's weak program for control of torque switch and limit switch set points. These results also identified problems outside the scope of the IE Bulletin 85-03 response that may require more immediate corrective action.

3.1.3 Motor-Operated Valve Corrective Maintenance Work History

A review of the history of corrective maintenance work revealed a significant number of MOV malfunctions that appeared to receive inadequate corrective action. When an MOV failed to operate, it was common practice for the licensee to "stick" the breaker to cycle the valve. This process used an insulated stick to manually shut the motor contacts and apply full motor torque to move the valve, thereby bypassing the torque switch, limit switch, and motor overload protection. Maintenance personnel would monitor the motor for excessive current during the process. In several cases reviewed, the MOV would be cycled a few times and then returned to normal operation without the cause of the problem being corrected. This practice resulted in repeated failures of MOVs as evidenced by the following:

(1) The Unit 3 low-pressure injection loop isolation valve 3LP-2 failed to operate five times from May 1984 to October 1985. For the first four failures, the licensee cycled the valve using the "stick" process and returned the valve to operation. On the last failure, the licensee found that the torque switches were improperly set at their minimum possible values. The torque switch values were increased and valve 3LP-2 has operated properly since that time.

(2) Isolation valve 3MS-84 to the turbine-driven EFW pump from the Unit 3 SG B failed to operate three times from June 1984 through October 1985. The corrective maintenance for the first two failures consisted of sticking the valve until it operated satisfactorily. On the third failure, the licensee identified that the limit switches for the valve were improperly set and corrected the problem.

(3) The team identified three instances where the power-operated relief valve (PORV) block valves 2RC-4 and 3RC-4 were seated using the "stick" process to prevent leakage during plant operations. The team considered this practice unsafe because driving this valve into its seat could impair valve movement and prevent primary system feed-and-bleed operations as described in licensee Emergency Operating Procedure EP/*/A/1800/01 (*designates appropriate unit number).

As a result of the NRC resident inspectors' urging, the licensee has curtailed the use of the "stick" process for corrective maintenance (Inspection Report 50-269, 270, 287/85-41, dated February 12, 1986). The team was concerned that problems previously resolved by this process may not have been completely corrected and could cause future MOV failures.

3.1.4 Maintenance Problems With Other Components

In addition to the MOV maintenance weaknesses, problems with other components also appeared to be inadequately corrected.

(1) From April 1984 to February 1986, there were 11 corrective maintenance work requests relating to the control of the steam supply to the Unit 3 EFW pump turbine. Air-operated pressure control valve 3MS-87 regulated steam to the turbine governor. Collectively, 3MS-87 and the governor controlled turbine speed. Repeated failures were identified with improper steam supply pressure and sluggish turbine speed control during pump testing. The corrective maintenance performed apparently was not effective and, in some cases, the system was started and stopped until it operated properly. The team was particularly concerned about the Unit 3 EFW turbine-driven pump operability during the following sequence of events:

(a) On June 7, 1984, the licensee performed PT/3/A/0600/12, "Turbine Driven Emergency Feedwater Pump Performance Test," Change 11, three times before achieving acceptable test results. On the first start, the pump only came up to half speed and was shut down after 5 minutes. After 30 minutes, a second test was performed and the pump took 30-45 seconds to come up to speed. A third test was performed 10 minutes later with acceptable test results. The pump was not declared inoperable. However, test personnel apparently suspected a governor problem and rescheduled the performance test to be conducted again in 1 week.

(b) On June 13, 1984, PT/3/A/0600/12 was performed twice before achieving acceptable test results; it was noted that the pump still responded slower than expected. The pump was not declared inoperable, but a work request was developed to investigate the problem.

(c) On June 22, 1984, the turbine governor was cleaned and some debris was found in the control oil lines. Interviews revealed that maintenance personnel did not think the small amount of debris that was found caused the observed problem, however, the pump tested satisfactorily after governor reassembly.

During this period, Oconee Unit 3 operated at power starting on June 9, 1984. Oconee Technical Specification (TS) 3.4.2.b required that, in the case of an inoperable turbine-driven EFW pump, the pump be restored to an operable status within 72 hours or the unit be placed in hot shutdown within an additional 12 hours and reduced below 250°F in another 12 hours. The team was concerned that the Unit 3 EFW turbine pump did not meet TS operability requirements from June 7 through June 22, 1984. This item will remain unresolved pending followup by the NRC Region II Office (50-269, 270, 287/86-16-03).

(2) Corrective maintenance on the Unit 1 EFW system flow control valves 1FDW-315 and 1FDW-316 was conducted on April 25, 1985, and appeared inadequate. After a reactor trip, operations personnel had to take manual control of the EFW system flow control valves to maintain steam generator level because both of these valves would not function properly in automatic. The corrective action consisted of checking steam generator level control cabinet output voltages for the existing plant conditions. It was determined that no problems existed. No maintenance or calibration procedures were used except for a general plant equipment troubleshooting

procedure, measured voltages were not recorded, and no testing was conducted for this problem. These valve operators were considered not to be safety related by the licensee; however, the work request indicated that this was a safety-related maintenance activity.

3.1.5 Material Deficiencies

The team identified the following material deficiencies:

(1) The Unit 1 EFW turbine-driven pump outboard gland leakoff cavity was filled with water. The team was concerned that this could allow water to leak into the oil reservoir of the outboard pump bearing and render the pump inoperable. During the inspection, the licensee cleaned the cavity drain and inspected the oil reservoir, finding no water contamination.

(2) The cable runs from the limit switch junction boxes for the EFW turbine steam isolation valves 1MS-93 and 2MS-93 appeared to be improperly supported. This was a concern because the open limit switch from MS-93 starts the auxiliary oil pump to supply control oil to the turbine governor. The failure of this limit switch could prevent the turbine from starting on an automatic initiation signal.

(3) Approximately 15 feet of unsupported, interlocked armored cable was observed that fed into isolating diode cabinet 1ADA.

(4) Flexible conduit was observed to be broken away from the fittings at the connections to valves 1C-391, 1LPSW-18, 1HP-27, and the thermocouple connection box on EFW pump 1B.

The resolution of these discrepancies will remain open pending correction by the licensee and followup by the NRC Region II (50-269, 270, 287/86-16-01).

3.2 Operations

In the area of operations, the inspection team evaluated the adequacy of shift manning; control of work and operations; operating, emergency operating, and off-normal operating procedures; operator familiarity with the physical location of various electrical and mechanical components; equipment operation in abnormal situations; routine system status verifications; and operator training. This evaluation focused on how each of these elements interfaced with operation of the EFW system under various normal and abnormal conditions.

3.2.1 Conduct of Operations

Several strengths were noted in regard to the routine conduct of operations. The inspection team observed five different reactor operators and nuclear equipment operators perform portions of their shift rounds and turnover. On the basis of the sample reviewed, the team considered that these operations personnel were knowledgeable of electrical and mechanical equipment locations and capabilities for EFW and safe shutdown facility (SSF) components. The inspection team observed a shift turnover from night shift to day shift on May 23, 1986. The turnover was accomplished in accordance with administrative requirements and appeared to be effective. Communications equipment to support off-normal

operations, such as two-way radios, was available and observed to be effective. Ladders for accessibility to overhead components were staged at numerous locations within the plant. Operators were observed to be familiar with procedures and drawings and could effectively use both in answering questions related to EFW operations. A limited overview of the qualification and requalification training programs reflected that extensive classroom and on-the-job training with task lists was provided for candidates to become or maintain their status as nonlicensed operators, reactor operators, and senior reactor operators. Actual implementation of the training programs was not reviewed.

3.2.2 Operational Limitations of Important Plant Systems

The inspection team was concerned about various operational limitations of important plant systems including the ability to use the condenser hotwell as a water source for the motor-driven EFW pumps and the ability to cool down the plant using the manually operated atmospheric dump valves (ADVs).

(1) The normal water source to the motor-driven EFW pumps was the upper surge tank (UST) that was required by Technical Specifications (TS) to contain 30,000 gallons, enough to supply about 1 hour of EFW flow. After depletion of this supply, the 142,000-gallon-capacity condenser hotwell could be used. However, the suction piping for the EFW pumps for Units 2 and 3 was installed with the centerline of the 20-inch pipe at the 48-inch level of the condenser hotwell, making only about 3,000 gallons directly available to the motor-driven EFW pumps from this source based on normal hotwell level of 58 to 65 inches. Procedurally, the use of the motor-driven EFW pumps was limited to 60 inches in the hotwell (see Observation 3.2.4(4)). The licensee stated that installation of a modification to extend the motor-driven EFW pump suction piping to near the bottom of the condenser hotwells in Units 2 and 3 was scheduled. The Unit 1 suction line had recently been modified to extend to about 12 inches from the bottom of the hotwell. It appeared that the capability to take suction from the hotwell with the motor-driven pumps in Units 2 and 3 had never been demonstrated (see Observation 3.3.3).

(2) Emergency operating and off-normal procedures required that the condenser hotwell be vented so that the motor-driven EFW pumps would not cavitiate when the hotwell was used as an EFW water source. This action would result in closure of the turbine bypass valves because of an interlock, thereby restricting plant cooldown capability to either manual operation of the atmospheric dump valves or primary system feed and bleed. Procedural guidance for use of the atmospheric dump valves appeared to be limited to contingency use of the low-pressure auxiliary service water pump in accordance with Operating Procedure OP/*/A/1106/06, "Emergency Feedwater System", Change 45, and shutdown in event of a fire in accordance with Operating Procedure OP/0/A/1102/25, "Shutdown Following a Fire," Change 0.

Interviews with operations personnel indicated much difficulty in operating the atmospheric dump valves under low differential pressure conditions. Licensee management representatives indicated that these manually operated 12-inch gate valves located about 10 feet off the floor had never been demonstrated to open under full system differential pressure. Additionally, the inspection team questioned the ability of these valves

---

* Asterisk designates appropriate unit number.

to effect a controlled cooldown. Apparently, this also has never been demonstrated. Primary system feed and bleed was prescribed in Emergency Operating Procedure EP/*/A/1800/01, "Emergency Operating Procedure," Change 1, Section 502, for loss of heat transfer. This procedure relied on operation of the power-operated relief valve (PORV), RC-66, and PORV block valve, RC-4, for the primary bleed path. Neither of these valves was environmentally qualified.

3.2.3 Undesignated and Uncontrolled Valves in Backup Nitrogen Systems

A walkdown of the backup nitrogen systems for valves MS-87, FDW-315, and FDW-316 revealed that undesignated and uncontrolled valves were installed. Examples included the root valves from the nitrogen system to the valve actuators and, in the case of the Unit 2 nitrogen system for valve MS-87, two isolation valves downstream of the pressure regulators connected to the bottle. These valves were not labeled, did not appear on applicable system drawings, and were not periodically verified to be properly aligned. The inspection team considered the existence of uncontrolled valves to be another factor which cast doubt on the reliability of the backup nitrogen system (see Observations 3.3.5 and 3.4.6). Sometime between May 21 and June 2, 1986, one of these valves in the Unit 2 MS-87 nitrogen system was removed from the system and yet there was no indication that this was performed under the licensee's prescribed work control program. This apparent uncontrolled modification to a plant system will remain unresolved pending followup by the NRC Region II (50-269, 270, 287/86-16-04).

3.2.4 Procedural Weaknesses Regarding the EFW System

A review and walkthrough was conducted of the normal operating and emergency procedures for the EFW system. Several weaknesses were noted:

(1) EP/*/1800/01, "Emergency Operating Procedure," Change 1, Paragraph 5.0, step 5.4.1, did not require shutting the appropriate main steam inlet valve MS-82(84) to the turbine-driven EFW pump on first indication of a main steam line rupture. The inspection team recognized that the appropriate valve would be eventually shut, if required (such as for a failure of check-valve MS-83(85) to seat, see Observation 3.3.2), as an operator progressed to the excessive heat transfer section of the procedure, Section 503; however, this would be accomplished later in the transient as a result of required actions to completely isolate both steam generators to determine which one was affected. This would complicate corrective actions associated with the transient and could increase the severity of the casualty.

(2) EP/*/A/1800/01, Paragraph 5.0 (step 5.4.1), Section 503 (step 3.3), Section 504 (step 10.1), and Section 506 (step 7.1) require shutting the EFW flow control valves FDW-315 or FDW-316, as appropriate, to isolate an affected steam generator from EFW flow in the event of a main steam line rupture, excessive heat transfer, overcooling transients, or a steam generator tube rupture. This was considered to be inadequate since flow control valves FDW-315 and FDW-316 are air-operated valves that fail open on loss of air and are backed up by a non-safety-related nitrogen system that was not designed in accordance with the licensee's commitments and not periodically tested (see Observations 3.3.5 and 3.4.6). The significance of one of these flow control valves failing open was considered to be the potential for overcooling the primary system and runout of one motor-driven and one turbine-driven EFW pump by feeding a ruptured, depressurized steam generator with the EFW system (see Observation 3.4.3).

---

* Asterisk designates appropriate unit number.

Interviews with operating personnel and a walkdown of the control room panels indicated that the potential existed for this condition not to be immediately recognized. If feedwater flow indication to the isolated steam generator was not being monitored, as could be expected in this situation, a likely indication for this failure would be overcooling of the primary system. Interviews with operating personnel revealed varied actions to compensate for this failure. Some operators indicated they would shut the appropriate motor-operated valves FDW-372(382) and FDW-368(369) or stop the appropriate EFW pump. Most operators interviewed indicated that they would dispatch a nuclear equipment operator to the penetration room to manually shut the appropriate flow control valve FDW-315 or FDW-316. The inspection team considered that a significant amount of time could be required to identify and resolve this failure.

(3) OP/*/A/1106/06, "Emergency Feedwater System," Change 45, did not contain limits and precautions with respect to cycling motor-driven EFW pumps. This was considered to be a weakness because design data indicated that there are time limitations associated with cycling these pumps and this information was not readily available or known by operations personnel.

(4) OP/1/A/1106/06, "Emergency Feedwater System," Change 45, Enclosure 4.9, step 2.8 note, limits motor-driven EFW pump operation when taking suction from the condenser hotwell to a minimum hotwell water level of 60 inches. This procedure did not reflect accomplishment of nuclear station modification (NSM) 12493 to lower the motor-driven EFW pump suction point in the hotwell. The post-modification testing for this NSM was conducted on April 11, 1986.

(5) OP/*/A/1106/06, "Emergency Feedwater System," Change 45, Enclosure 4.9, step 2.8 and substeps, required opening valve IV-186 to break main condenser vacuum to allow the motor-driven EFW pumps to take suction from the main condenser hotwell. Additionally, step 2.4 of this procedure contained a precaution not to take suction from the hotwell with the motor-driven EFW pumps without first breaking vacuum. There was no caution within the procedure to warn personnel that this would result in loss of turbine bypass valve cooldown capability. The inspection team considered this to be an action of potentially significant consequence as discussed in Observation 3.2.2(2) above.

The procedural weaknesses identified above will remain unresolved pending followup by the NRC Region II (50-269, 270, 287/86-16-05).

3.2.5 Improper Implementation of Independent Verification

During observation of a night shift to day shift turnover on May 23, 1986, the inspection team noted an example of improper implementation of independent verification. The pressurizer was being cooled down in accordance with operating procedure OP/1/A/1102/10. Enclosure 4.3, step 2.7, substeps 4 to 6, of this procedure required valve manipulations with independent verification. The valves were manipulated at 0443 on May 23, 1986. At 0530 on May 23, 1986, pressurizer cooldown was commenced as noted in step 2.9 of Enclosure 4.3 of the procedure. At approximately 0700 on May 23, 1986, the oncoming shift relieved the offgoing shift. At that time, the inspection team observed that Enclosure 4.3, step 2.7, substeps 4 to 6, had not been independently verified as required by the operating

* Asterisk designates appropriate unit number.

procedure. This was contrary to Oconee Nuclear Station Directive 2.2.2, "Independent Verification," and will remain unresolved pending followup by the NRC Region II (50-269, 270, 287/86-16-06).

3.3 Surveillance and Testing

The team reviewed the testing associated with assuring functionality of the emergency feedwater system, the standby shutdown facility (SSF), the low pressure auxiliary service water system, the backup nitrogen supply system for pneumatic valves in the EFW system, and the steam supply system to the turbine-driven EFW pump. In particular, the team sought to determine that system components had been adequately tested to demonstrate that they could perform their safety functions under all conditions.

3.3.1 Surveillance Test and Calibration Procedures

Routine surveillance test and calibration procedures (referred to as PT and IP procedures, respectively) were found generally to be adequate for demonstrating system functionality, were clearly written in a consistent format, and contained detailed reference information pertaining to equipment adjustments that could be necessary.

3.3.2 Testing of Check Valves MS-83 and MS-85

Periodic testing of some check valves was found to be inadequate to ensure that the valves would perform their safety function during abnormal events. Valves MS-83 and MS-85 were not periodically tested in the reverse flow direction. These valves are the nonreturn check valves in the main steam branch lines that merge to supply steam to the turbine-driven EFW pump from SG A and SG B, respectively. Although these valves were periodically tested in the flow direction during turbine-driven EFW pump surveillance testing, the valves were not tested to ensure that they would perform their design function to prevent backflow through the steam line in the event of a steam line break. Figure 1 on page 17 shows the piping arrangement at the time of the inspection. Normally, motor-operated isolation valves MS-82 and MS-84 would be open so that steam could be applied to the EFW turbine pump by opening normally closed MS-93. MS-87 was a pneumatically operated pressure control valve that maintained steam turbine inlet pressure to 300 psig. Therefore, steam pressure was applied up to MS-93 during standby operation. Steam traps in the line remove any condensate that may build up, and MS-87 may open periodically to maintain downstream pressure. Although the steam flow would be expected to be small during standby operation, low steam flows have been known to cause degradation of check valves in similar applications (IE Information Notice 86-09).

Because these check valves were not tested in the backflow direction, an undetected failure could exist where, for example, the disc had broken off and become cocked in the valve, preventing full closure (thus defeating the check feature) and full opening (thus restricting steam flow). If such a failure were to occur, the plant may not be adequately protected assuming an unisolable line break in one SG and a single failure. The following example is provided to illustrate the team's concern. An unisolable high-energy line break is assumed to occur in SG B concomitant with a single failure of the overhead lines from the 230 kV switchyard. SG B depressurizes. Because it was not adequately tested, MS-85 is assumed to have an undetected failure

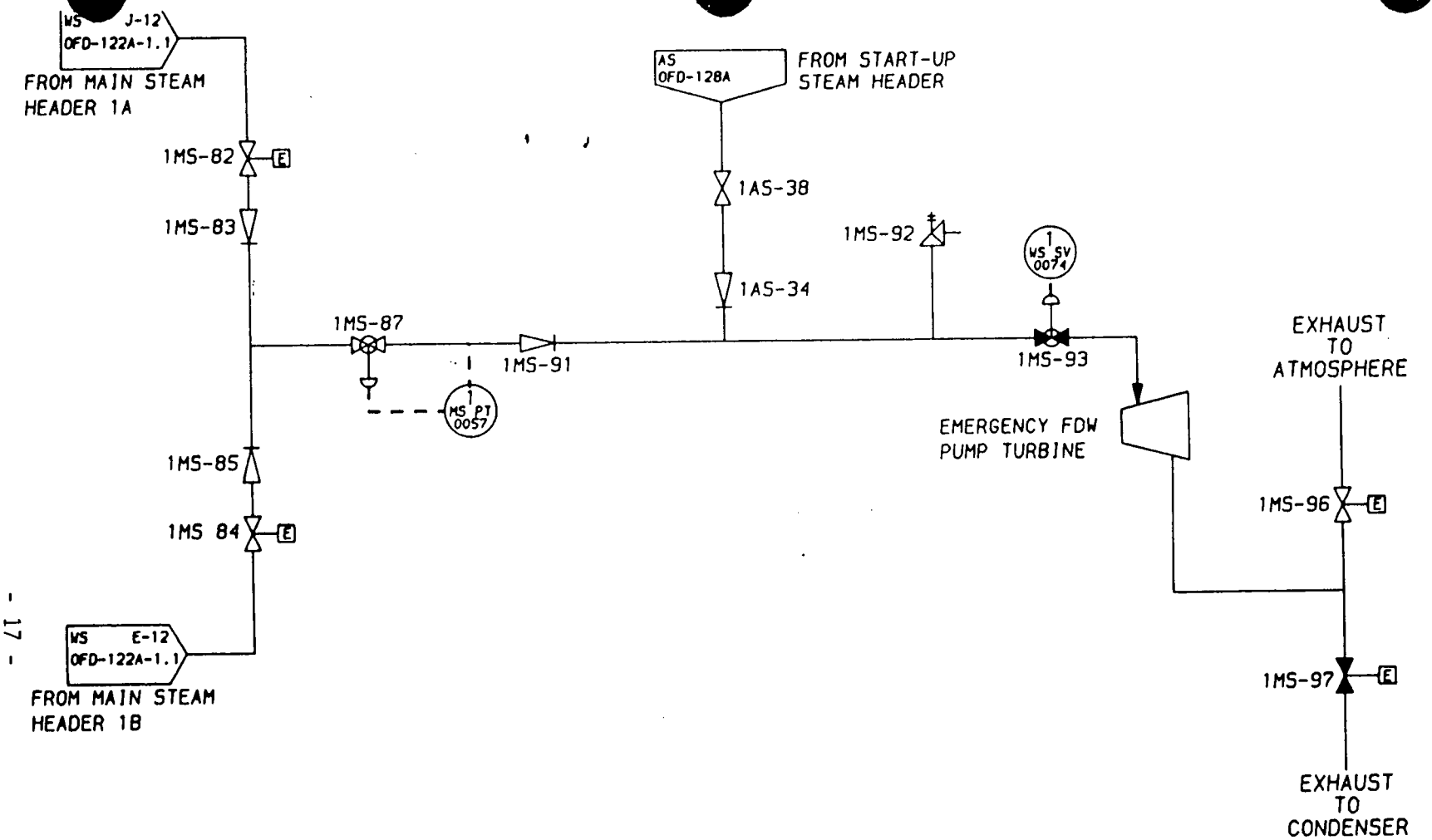

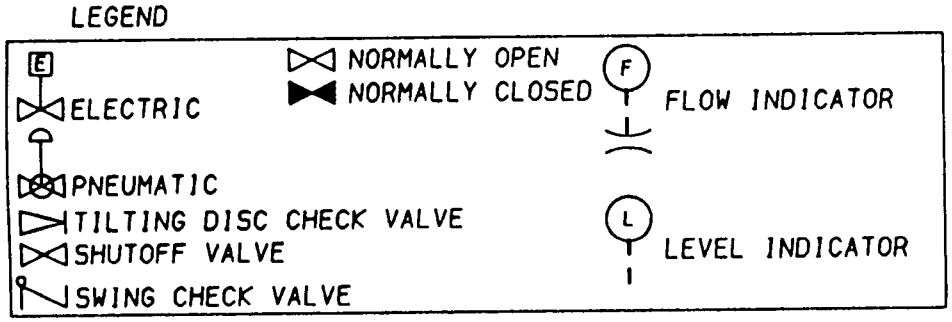

FIGURE 1.
STEAM SUPPLY FOR TURBINE DRIVEN EFW PUMP (UNIT 1.)

before the initiating event, causing SG A to be susceptible to depressurization through the cross-connected 6-inch main steam branch lines. Operator action would be required to shut either MS-82 or MS-84 to isolate the break from the unaffected SG; however, the motor control centers for these valve operators would be load shed with the loss of the overhead line from the 230 kV switchyard. If this were to occur, the operator would either (1) have to rearrange the electrical lineup to supply these load centers from the Keowee hydroelectric plant underground line and close the breakers supplying power to MS-82 or MS-84 or (2) manually shut these valves which are located 20 to 30 feet off the floor in the turbine building. Access to these valves, if not prevented by the accident, would require the operator to climb over steam piping. During the intervening time, both SGs may be blowing into the containment or the turbine building. Because of the extensive problems with the licensee's motor-operated valve (MOV) program and the specific documented problems regarding the operation of 3MS-84 (see Observation 3.1.3(2)), the inspection team considered that the ability to shut these non-safety-related MOVs could not be assured even assuming electrical power was available. The failure to adequately test check valves MS-83 and MS-85 will remain unresolved pending followup by the NRC Region II (50-269, 270, 287/86-16-07).

3.3.3 Testing of Check Valves 2C-568 and 3C-568

Full cycling and flow verification of check valves 2C-568 and 3C-568 were not performed in accordance with the provisions of the ASME Code, Section XI, Subsections IWP, IWV (1980 Edition through Winter 1980 Addenda) as required by Technical Specification 4.0.4. The licensee had not requested relief for these valves in the Oconee Nuclear Station Inservice Inspection Program, Revision 10, dated January 13, 1986. Check valves 2C-568 and 3C-568 are located in the motor-driven EFW pump suction line from the condenser hotwell for Units 2 and 3, respectively. A licensee representative stated that full flow verification for these check valves was not performed because of the possibility of air binding the motor-driven EFW pumps. Check valve 1C-568, located in the motor-driven EFW pump suction line from the condenser hotwell for Unit 1 was tested on April 11, 1986, during the performance of TT/1/A/0600/03, "Motor Driven Emergency Feedwater Pump Refueling Test." This temporary test procedure was performed following the installation of NSM 12493 on Unit 1. This modification extended the motor-driven EFW pump suction piping to near the bottom of the condenser hotwell. The failure to test check valves 2C-568 and 3C-568 will remain unresolved pending followup by NRC Region II (50-269, 270, 287/86-16-08).

3.3.4 Post-Modification Testing for NSM 12493

Unit 1 post-modification testing for NSM 12493 was determined to be weak in that the design intent of the NSM was not verified. This modification extended the suction piping of the motor-driven EFW pumps to near the bottom of the condenser hotwell in Unit-1 to make 115,000 gallons of water available to the motor-driven EFW pumps while still allowing the condenser to be used for bleeding steam. The licensee's design engineering staff had recommended that post-modification testing be performed to confirm 12 inches as a safe minimum hotwell level to maintain the pump suction and to determine the feasibility of controlling condenser pressure at partial vacuum values. Testing to substantiate these design criteria was not incorporated in the post-modification testing. The post-modification test, as conducted by the Performance Group, was used to validate full-flow verification for 1C-568. Hotwell level was not reduced below 26 inches and condenser pressure was maintained at atmospheric pressure. As

conducted, the post-modificaton test did not establish the availability of the 115,000 gallons of water in the condenser hotwell for the Unit 1 motor-driven EFW pumps. Additionally, subsequent to this test the licensee's operating procedure for this system was not updated to indicate that the Unit 1 motor-driven EFW pumps could take a suction on the hotwell below 60 inches (see Observation 3.2.4(4)).

3.3.5 Post-Modification and Periodic Testing for Nitrogen Systems

Weaknesses were noted with the licensee's post-modification testing and periodic testing for nitrogen bottle backup systems for pneumatically operated valves FDW-315, FDW-316, MS-87, MS-126, and MS-129 affecting the EFW system. In a letter to the NRC dated April 3, 1981, the licensee stated that nitrogen bottle backup systems for these valves would be functionally tested to assure that the associated air-operated valves could be cycled to meet the 2-hour minimum availability requirement. The inspectors reviewed the post-modification testing for the nitrogen backup supply system for valves FDW-315 and FDW-316 and the system for MS-87, MS-126, and MS-129 as installed by NSM-1293 and NSM-1367, respectively. These modifications were applicable to Units 1, 2, and 3.

In February 1981, testing and calculations were performed on the backup nitrogen supply to FDW-315 and FDW-316 to determine required nitrogen pressure and volume for the backup nitrogen tanks. This test was not unit specific and it was unclear to the inspection team which unit was tested. This test was insufficient to provide adequate post-modification testing because these valves were only stroke tested without demonstrating that they could regulate fluid flow while being supplied with nitrogen. The functional tests for MS-87, MS-126, and MS-129, which regulate steam to the turbine-driven EFW pumps, were also not considered sufficient to provide adequate post-modification testing of this nitrogen backup system because these valves were only stroke tested without steam flow in the lines. Pressure regulation by the nitrogen system during turbine-driven EFW pump operation was not demonstrated. No testing was performed to demonstrate that either backup nitrogen supply system was capable of operating their respective valves for the required 2 hours. Additionally, the licensee had not implemented a periodic surveillance test program for these nitrogen systems and was conducting no periodic testing of their performance. The failure to perform adequate functional testing of these backup nitrogen systems appeared to be contrary to a licensee commitment and will remain unresolved pending followup by the NRC Region II (50-269, 270, 287/86-16-09).

3.3.6 Testing of the Standby Shutdown Facility

A weakness was noted with regard to the testing of the standby shutdown facility (SSF) that housed the systems and components necessary to provide an alternate and independent means to achieve and maintain a hot shutdown condition for one or more of the Oconee units. This facility housed an independent power supply and a pump that was capable of supplying raw water at high pressure to the SGs of all three Oconee units. The SSF was designed to resolve safe shutdown requirements for fire protection, turbine building flooding, and physical security.

Inadequate corrective action had been taken as a result of unsatisfactory SSF HVAC service water pump test results. A review of the SSF HVAC service water pump performance tests performed in accordance with Procedure PT/0/A/0400/06, conducted from October 30, 1984, through March 4, 1986, revealed pump flows of

27 gpm for tests conducted on July 18 and again on September 12, 1985. These values were significantly less than the required action values of 37.4 gpm for pump 1 and 36.0 gpm for pump 2.

The licensee's procedure stated that if test results fall in the required action range, maintenance will be performed and a post-maintenance test will be completed or an analysis will be performed to demonstrate that the condition does not impair pump operability. The licensee concluded that the HVAC system was maintaining acceptable temperatures in the SSF control room and computer room; therefore, the system fulfilled its required function. However, no analysis was available to support this conclusion assuming worst-case heat loads in the SSF. In addition, ASME Section XI, IWP-3230(c) requires that a new set of test reference values be established after such an analysis. This also was not performed. The licensee indicated that the pump performance was considered acceptable and the low flows were attributed to blockage in the downstream piping. The most current measured pump flows at the time of the inspection were 36 gpm for pump 1 and 35.5 for pump 2. These values were just below the required action values noted in the test procedure. This apparent failure to take adequate corrective action as a result of unsatisfactory test results will remain unresolved pending followup by NRC Region II (50-269, 270, 287/86-16-10).

3.3.7 Auxiliary Service Water Pump Testing

The routine testing conducted on the auxiliary service water pump was considered inadequate. As described in the FSAR, this pump is to be capable of providing a low-pressure supply (85 psig) of raw water to the steam generators of all three units in the event that the normal EFW system becomes disabled as a result of a tornado or missile hazard. The auxiliary service water pump performance test PT/2/A/251/10 did not record suction pressure, discharge pressure, or flow, as required by ASME Section X1, IWP-300. The Oconee Nuclear Station In-Service Inspection Program, Revision 10, submitted January 13, 1986, requested exemption from these requirements on the basis that suction pressure or flow instrumentation did not exist for the pump. This pump was found to be monitored only for vibration and bearing temperature. The failure to adequately monitor the performance of this pump will remain unresolved pending the outcome of the licensee's exemption request and followup by NRC Region II (50-269, 270, 287/86-16-11).

3.3.8 Surveillance Testing of Batteries

The surveillance testing performed on the Oconee instrument and control batteries, the Keowee batteries, and the 230-kV switchyard batteries was considered deficient. Technical Specification (TS) 4.6.10 stated that a 1-hour discharge service test at the required maximum load shall be performed annually on the instrument and control batteries, the Keowee batteries, and the 230 kV switchyard batteries. TS 3.7 described the required capacity of the dc systems in terms of 1-hour profiles.

Battery	Initial Inrush (Amperes)	Next 59 Minute (Amperes)	Ampere Hours Removed
Oconee I&C	1160	506	516.9
Keowee	1031	179.4	193.6
230 kV Switchyard	130	10	12

However, surveillance test procedures described the annual 1-hour discharge test as a constant current discharge as follows:

Battery	Capability Test Procedure	Rate (Amperes)
Oconee I&C	IP/0/A/3000/3	600
Keowee	IP/0/A/400/11	400
230 kV Switchyard	IP/0/A/3000/15	25

In explaining the difference between the Technical Specification values and those of the surveillance test procedures, the licensee stated that the discharge rates appearing in the test procedures were based on the ampere-hours removed, as defined in the Technical Specification, with some additional discharge added for margin.

Following a design-basis event requiring the batteries, current demands will be the highest initially. As a result, battery voltage would drop to its lowest value during the initial inrush current and would return to a higher value for the remainder of the discharge. The team confirmed that the size of the original instrument and control batteries and the Keowee batteries were determined by the initial inrush current and not by the total ampere-hour removed during a 1-hour discharge. The Oconee test procedures did not confirm the capability of the battery to meet the required inrush currents identified in TS 3.7. The failure to test the station batteries in accordance with Technical Specifications requirements will remain unresolved pending followup by the NRC Region II (50-269, 270, 287/86-16-12).

3.4 Design Changes and Modifications

Design changes and modifications were reviewed in the disciplines of mechanical, electrical, and instrumentation and control. This review concentrated on those design changes and modifications that affected: the capability of the emergency feedwater (EFW) system to deliver required flow under various accident and transient scenarios, the design adequacy of the backup nitrogen supply to pneumatically operated valves, the capability of the standby shutdown facility (SSF) auxiliary service water pump to deliver required flow following complete loss of feedwater scenarios, the adequacy of instrumentation and control equipment associated with EFW equipment, the design adequacy of supporting systems such as the electrical power distribution, and the interaction of the integrated control system (ICS) with the EFW system.

Figure 2 on page 22 illustrates the EFW piping configuration for Oconee Unit 1 at the time of the inspection. The EFW piping configuration for Units 2 and 3 were similar to Unit 1 in most significant details.

3.4.1 Deviation from FSAR

The FSAR stated that the EFW system was capable of withstanding the maximum hypothetical earthquake (equivalent to a safe shutdown earthquake) and that the failure in the nonseismic portion of attached piping would not cause the loss of function to the EFW system because automatic and remote manually operated seismic/non-seismic boundary valves are used. Contrary to this commitment in the FSAR, substantial portions of the EFW system were not designed to be capable

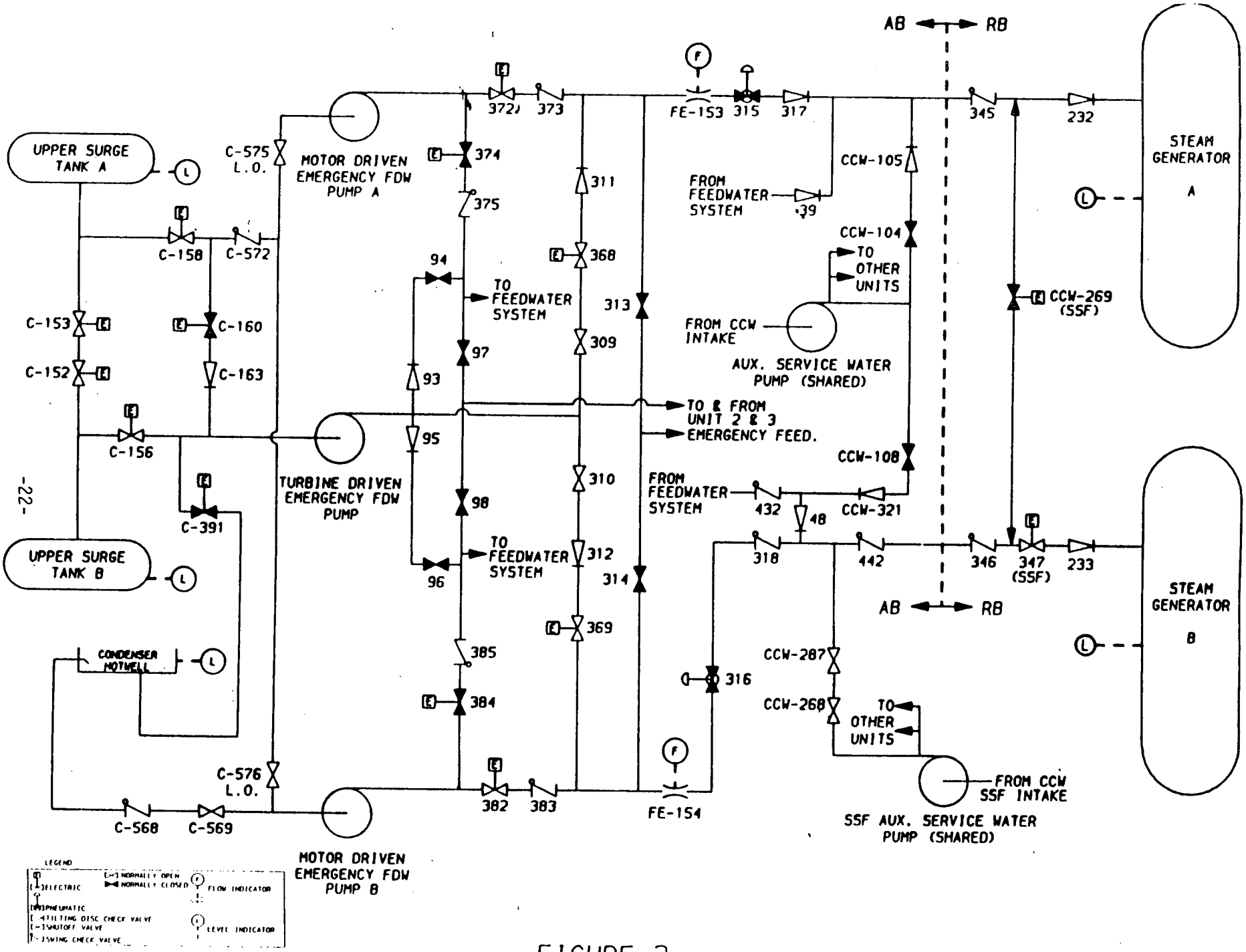

FIGURE 2.
SIMPLIFIED EMERGENCY FEEDWATER SYSTEM ARRANGEMENT FOR UNIT 1

of withstanding the maximum hypothetical earthquake. This deviation was recognized by the licensee before this NRC inspection as documented by LER 86-002, dated March 5, 1986.

3.4.2 Seismic Design and Installation of Safety-Related Equipment

The team observed a number of instances where it appeared that certain electrical components may not have been seismically designed or installed.

(1) The Keowee safety-related batteries and racks were replaced with equipment from a manufacturer different than the original battery and rack. These batteries were required to start and control the Keowee standby power supplies. The team observed that the end stringers on the battery rack that restrained cell movement had not been installed in accordance with the manufacturer's installation drawing. Specifically, the drawing notes stated that the end stringer should be within 1/4 inch of the cell or spacer material should be added between the end stringer and the cell to reduce the free gap to equal to or less than 1/4 inch. The drawing identified the spacer material by specific bill of material number. Contrary to the above instructions, no spacer material had been installed in either Keowee battery. Although not precisely measured before the licensee's corrective action, the inspectors observed gaps of approximately 3 to 5 inches between each battery and its end stringers. The licensee subsequently reported this deficiency to the NRC Operations Center as required by 10 CFR 50.72.

(2) The Oconee instrumentation and control batteries were found to contain interstep connections made up of two pieces of bus bar with a simple bolted connection. Relative motion between the end cells located on the upper and lower steps of the rack could loosen this connection, resulting in excessive heat and voltage drop at this juncture. The team could not confirm the seismic adequacy of the existing connection because the seismic test for these batteries did not document the method of interstep connection.

The deficiencies identified above regarding the inadequate seismic design and installation of safety-related equipment will remain unresolved pending followup by the NRC Region II (50-269, 270, 287/86-16-13).

3.4.3 Runout Protection for EFW Pumps

The EFW pumps were found to be susceptible to damage from runout conditions following anticipated transients or high-energy line break events. Runout is a term used to describe a condition of high flow (beyond design capacity) that could result in pump damage due to vibration and cavitation.

(1) For loss of main feedwater events concurrent with a trip of all reactor coolant pumps, the EFW system initiates on loss of main feedwater. Flow control valves FDW-315 and FDW-316 open fully to fill SG A and B to the natural circulation level. These valves will move to a throttle position only after SG natural circulation levels have been reached. While filling to these levels, SG pressures will tend to decrease. As a result, EFW flow will increase because the

system resistance curve is very flat and flow is essentially dependent on SG pressure plus the pressure drop across FDW-315 and FDW-316. If either or both FDW-315 or FDW-316 fail open after SG levels reach the natural circulation point, then SG pressure will continue to decrease and EFW flow will increase until operator action is taken to stop feedwater addition. The EFW pumps associated with the failed-open flow control valve will reach runout and the potential will exist for pump damage as a result of vibration and cavitation. FDW-315 and FDW-316 have pneumatic actuators that are not safety related and that are designed to fail open on loss of pneumatic supply. The pneumatic sources for these valves were from non-safety-related sources of instrument air and backup nitrogen bottles.

(2) Design analysis was completed during the inspection by the licensee to arrive at a best-estimate of maximum and minimum EFW flow rates at various SG pressures for (1) motor-driven pump A to SG A, (2) motor-driven pump B to SG B, and (3) turbine-driven pump to either or both SGs. This design analysis concluded that EFW flow rates must be monitored when the system is in use to prevent pump runout, that it is possible for the turbine-driven pump to experience runout when the control valves are 100 percent open and SG pressures drop below 900 psia, and that it will be necessary for operators to take manual control of these valves to prevent this from occurring. The analysis also indicated that for the turbine-driven pump feeding both SGs, runout would occur at steam pressures of 850 to 900 psia. For the motor-driven EFW pumps, the worst runout condition would occur in train A because of the reduced piping losses. For motor-driven pump A feeding SG A, runout would be reached at steam pressures of 700 to 750 psia. Plant operating procedures contained no references or cautions to assist operations personnel from exceeding EFW pump runout conditions.

(3) For a loss of main feedwater scenario with all three EFW pumps running, the licensee indicated that SG pressure would decrease to 800-850 psia in approximately 10 minutes and repressurize once FDW-315 and FDW-316 started to throttle. However, if FDW-315 and FDW-316 failed to throttle then the turbine-driven pump would reach runout at roughly 700 to 750 psia. It should be noted that the operators would expect FDW-315 and FDW-316 to remain open for approximately 10 minutes while the SG level is raised to the natural circulation point and that pump runout would not be obvious because the pumps were located in the turbine building.

(4) The potential for severe runout conditions would be increased for high-energy line break events. Because high-energy line breaks would tend to decrease SG pressure more rapidly, the EFW pumps would reach runout conditions sooner and less time would be available for operator corrective action.

In summary, the team found that design features were not provided to protect EFW pumps from damage caused by runout conditions. Further, the team concluded that operator action alone may not be adequate or timely enough to prevent conditions that could degrade pump performance, particularly since the operators had neither the training nor the procedural guidance to assist them. The potential for runout was considered to be a significant design consideration that should have been addressed as part of the modification to add the two motor-driven EFW pumps to each unit. The apparent failure to conduct adequate design analyses in accordance

with ANSI N45.2.11 was discussed with the licensee and will remain unresolved pending followup by the NRC Region II (50-269, 270, 287/86-16-14).

3.4.4 Piping Design Analyses

EFW turbine steam supply relief valve MS-92 did not have sufficient capacity to prevent piping between valves MS-87 and MS-93 from exceeding piping design pressure assuming that MS-87 failed open as designed. Figure 1 on page 17 shows the layout of this piping. Independent analysis by the team concluded that piping between MS-87 and MS-93 could be pressurized to approximately 450 psia. This analysis assumed 1065 psia in the SGs, MS-93 shut, and MS-92 open and discharging at a capacity consistent with the overpressure condition. During the inspection, the licensee acknowledged that MS-87 was not physically restrained from failing fully open. Analysis by the inspection team concluded that MS-87 would have to be restrained from opening beyond approximately 80% to eliminate this condition. Review of maintenance history indicated that MS-87 had failed open in the past. However, the effects of overpressurization were not addressed because the relief valve was thought to be adequately sized by the licensee's operations and maintenance personnel.

The apparent failure to conduct adequate design analyses in accordance with ANSI N45.2.11 was discussed with the licensee and will remain unresolved pending followup by the NRC Region II (50-269, 270, 287/86-16-15).

3.4.5 Adequacy of Design of Safety-Related Inverter

Voltage at the Unit 3 safety-related inverter 3DID could drop below its minimum input voltage of 105 V when fed from Unit 1, its alternate source of power. This situation could occur automatically on a loss of voltage from the Unit 3 instrumentation and control battery. In response to the team's concern regarding the capability of one unit's dc system serving as the backup source for another unit's load, the licensee performed a dc system voltage calculation. The results showed that the voltage at the Unit 3 safety-related inverter could drop as low as 95.7 V when fed from Unit 1. The potential to operate safety-related inverters below their specified and tested minimum input voltage of 105 V had not been previously recognized by the licensee, and the effect that this low input voltage would have on an inverter output or on loads connected to the inverter-fed buses had not been analyzed.

This item was discussed with the licensee's electrical engineering staff who indicated that it was a potential concern that would require further review. The adequacy of the design of safety-related inverter 3DID will remain open pending followup by the NRC Region II of the results of the licensee's technical review (50-269, 270, 287/86-16-02).

3.4.6 Backup Nitrogen Supply Systems

The backup nitrogen supplies for the EFW flow control valves were sized on the basis of 1 hour of operation instead of 2 hours as committed to in an April 3, 1981 letter to the NRC. The licensee committed to perform a functional test to assure that EFW flow control valves FDW-315 and FDW-316 and steam pressure regulating valves MS-87, MS-126, and MS-129 could be cycled to meet the 2-hour minimum availability requirement. The inadequate testing of these valves is described in Observation 3.3.5 of this report. The team reviewed a February 23, 1981 internal Duke letter which provided the results of testing and calculations

performed on the backup nitrogen supply to FDW-315 and FDW-316. These calculations demonstrated that the backup nitrogen supply was sized on the basis of 1 hour of operation. This calculation was not checked or verified.

The April 3, 1981 letter to the NRC also committed to install nitrogen bottle backup supply to the control air systems for steam pressure regulating valves MS-87, MS-126, and MS-129. These nitrogen bottles were to be sized to provide a 2-hour supply of nitrogen in the event of loss of station air caused by a complete loss of ac power. Although these valves were required to modulate during a 2-hour period, no design analyses were available to establish the capacity of the nitrogen supply.

The failure to meet licensing commitments with regard to the EFW system backup nitrogen supply systems was discussed with the licensee and will remain unresolved pending followup by the NRC Region II (50-269, 270, 287/86-16-16).

3.4.7 Design Analyses Not Performed

Design control activities did not ensure that critical mechanical design analyses were performed or existing analyses were revised during the preparation and closeout of modifications. In some cases, the team was concerned that the licensee did not refer to the original or modified design bases when preparing and approving a design change. The following examples were noted:

(1) For modification NSM-1275, total discharge head (TDH) and net positive suction head (NPSH) calculations were not performed even though new motor-driven EFW pumps were added to the system in 1979. The failure to perform these calculations should have been detected and corrected during the closeout of this modification and when the EFW system was subsequently modified to interface with the auxiliary service water pump associated with the standby shutdown facility (SSF).

During the inspection, analyses for NPSH and TDH were completed by the licensee. This calculation identified a potential for runout of the EFW pumps if flow control valves FDW-315 or 316 remain open. (See Observation 3.4.3.)

(2) For modification NSM ON-1012, a TDH calculation was not performed to confirm that the SSF auxiliary service water pump could deliver required flow to six SGs as described in system description drawing ONSD-176-30.

(3) Orifice sizing calculations were either not done or not documented during modifications to install crossover flow paths and safety-related flow indication in the high-pressure injection system.

(4) For modification NSM-1275, design analyses were not prepared to confirm that the motor-driven EFW pumps from other units could supply both SGs at full secondary system pressures. The capability of the EFW system to meet this requirement was stated in FSAR Section 10.4.7.3.d. The team was shown an uncontrolled engineer's file which contained flow network computer runs; however, the file information was not in a form suitable for review without recourse to the originator and the results were not identifiable.

The information in the file appeared to be generated after the modification was completed. The file was considered by the team to be a working file. It appeared that design engineering personnel recognized that such an analysis was needed to confirm statements made in licensing documents but never completed the analysis by having it verified and documented.

(5) For modification NSM ON-2245, a QA Condition 1 (safety-related) calculation was performed, reviewed, and approved in November 1985. The calculation documented the selection of components for replacement of steam relief valve MS-92 and the addition of a solenoid valve to the control scheme of pressure regulating valve MS-87 to make it close simultaneously with MS-93. Because the existing steam relief valve was to be replaced with a new valve of the same size, engineering personnel concluded that the same design parameters as the existing valve would be used. As a consequence, engineering personnel did not identify that the installed relief valve in the steam supply piping to the EFW turbine had insufficient capacity to prevent overpressure of the piping if the upstream pressure control valve MS-87 should fail open (see Observation 3.4.4).

As the above examples illustrate, the team found that the licensee's design control activities did not ensure that critical mechanical design analyses were performed or that existing analyses were revised during the preparation and close out of modifications. ANSI N45.2.11 requires that design activities be prescribed and accomplished to ensure that design inputs are correctly translated into design output documents. Design analyses such as those described in 3.4.7(1) through 3.4.7(5) are required to be performed in a planned and controlled manner. This item has been discussed with the licensee and will remain unresolved pending followup by the NRC Region II (50-269, 270, 287/86-16-17).

3.4.8 Design Analysis Deficiencies

Several examples were found where analyses for safety-related equipment were not performed in a controlled manner.

(1) The orifice sizing calculations for safety-related flow transmitters FT-153 and FT-154 were not performed in accordance with a controlled design process. Modification NSM-1275 Part A added orifice flanges to each EFW line in response to a post-TMI action item. Design activities performed as part of the modification included sizing calculations for the primary flow elements to establish the orifice plate diameters. Analyses performed were not checked or verified and the preparer was not identified. In addition, the design analyses did not have file identifiers and were not identified as QA Condition 1.

(2) A design analysis completed during the inspection determined the best-estimate minimum and maximum flows the EFW pumps could deliver to remove reactor decay heat. This analysis contained errors which should have been detected and corrected during the design verification process.

(a) This calculation assumed that the piping was clean and flow was in the zone of complete turbulence. This assumption was used to establish the friction factors for calculation simplicity at 0.015 for 6-inch pipe, 0.017 for 4-inch pipe,

and 0.018 for 3-inch pipe. The adequacy of this assumption was not justified nor confirmed later in the calculation after the minimum system flow rate was calculated. Specifically, the calculation determined that the minimum flow rate could be as low as 466 gpm when steam generator pressure is at 1100 psia. For the largest sized pipe (6 inches), the corresponding friction factor was actually 0.0168. Therefore, the assumption of a friction factor of 0.015 for 6-inch, schedule 80 pipe was not conservative for determining minimum flow. This assumption resulted in approximately a 5 percent nonconservative error in the friction loss at low flows.

(b) The calculation used piping isometric drawings which did not reflect the as-installed condition. Specifically, the calculation referenced Duke isometric drawings which were not updated to reflect the addition of piping and valves associated with the interface of the SSF auxiliary service water pump. Engineering personnel recognized that additional valves were indicated on the flow diagram that were not located on the isometric drawings. To compensate, flow losses associated with these additional valves were added to the line losses, but the effect of the altered piping was not addressed. In essence, it was assumed that the new valves had been added to existing piping and that the piping arrangement had not been altered. This assumption was essentially true for train A; however, it was not true for train B because the piping arrangement was altered significantly through the addition of an increased run of piping and a number of elbows and tees.

(c) The calculation assumed that valve FDW 318 was a tilting disc check valve; however, it was a 6-inch swing check valve. Instead of using an L/D of 40, an L/D of 50 should have been used.

During the inspection the licensee performed additional analyses to confirm that the line loss errors would not substantially alter the conclusions concerning minimum feedwater flow. The licensee concluded that the operation of the EFW system was assured even though the calculation contained the errors identified above.

(3) Dynamic analysis of the motor starting capability of the standby power supply fed through the underground feeder from the Keowee hydroelectric plant was considered inadequate to address the effects of undervoltage conditions on class 1E motor control centers and the motors fed by those centers. In 1980, dynamic analysis was performed after a static analysis had indicated that an undervoltage condition existed with the addition of the six motor-driven EFW pumps in 1979. The following deficiencies were noted:

(a) Although the analysis consisted of a detailed summary of system impedances from Keowee through the distribution system and down to the 4-kV motors and the 600-V buses, it did not address impedances from the 600-V buses to the terminals of the various 600-V loads. Some of the larger loads on the 600-V system,

such as the reactor building cooling fans, had lead lengths that approached 400 feet. The additional impedance could be significant.

(b) Reactor building cooling fan B was not included in the analysis. This load was apparently overlooked when the analysis was performed. The addition of this load would approximately triple the kVA load assumed on motor control center 3XS3. As a consequence, the voltage drop to the motor control center would increase, further reducing the voltage at the motor terminals.

(c) The analysis was not treated as a design calculation and was apparently not checked or design verified.

It appeared that the weaknesses identified above did not adversely affect the design of installed hardware but could have affected the assumed design margin. ANSI N45.2.11 requires that design analyses be performed in a controlled and correct manner. This requires that analyses contain sufficient detail as to purpose, method, assumptions, design input, references and units so that a person technically qualified in the subject can review and understand the analyses and verify the adequacy of the results without recourse to the originator. ANSI N45.2.11 also requires that design analyses be verified to confirm or substantiate their adequacy. The apparent failure to conduct adequate design analyses in accordance with ANSI N45.2.11 was discussed with the licensee and will remain unresolved pending followup by the NRC Region II (50-269, 270, 287/86-16-18).

3.4.9 Design Program Implementation of ANSI N45.2.11 Requirements

The team reviewed the general design process implemented by the Design Engineering Quality Assurance Plan (DEQAP) and found that the applicable procedures for design control of nuclear station modifications (NSMs) did not adequately implement ANSI N45.2.11 requirements for design process, design inputs, and design verification to ensure a properly documented and verified design package. As discussed in Observations 3.4.3, 3.4.4, 3.4.7, and 3.4.8, the team found that the requirements of ANSI N45.2.11 had also not been implemented for specific NSMs. The team noted that Duke Power Company (DPC) had committed to ANSI N45.2.11. The following concerns were identified:

(1) Design inputs associated with NSM packages were not required by DEQAP Procedure PR-160, "Nuclear Station Modification," to be documented as required by ANSI N45.2.11. In most cases, NSM packages reviewed by the team did not have design inputs documented and did not reference associated calculations. The team did note that PR-101, "Engineering Calculations," required documentation of design inputs such as methods, assumptions, and criteria used in accomplishing calculations. However, the team considered that a calculation was only one part of the design analysis for an NSM and documentation of design inputs for calculations did not necessarily satisfy documentation of design inputs for a complete NSM. The team also considered that unless NSM design inputs were clearly identified, the design verification process could not be accomplished in accordance with ANSI N45.2.11 requirements.

(2) DEQAP Procedures PR-160, "Nuclear Station Modification;" PR-101, "Engineering Calculations;" and PR-130, "Engineering Drawings," did not address specific guidelines, technical responsibilities, or documentation requirements for design verification; consequently they did not adequately implement ANSI N45.2.11 requirements. PR-101 and PR-130 required design activities to be checked for completeness, clarity, and accuracy by a qualified checker. PR-160 had no statements regarding design verification. The team noted that some individual design groups used checklists for design checking but this policy was neither widespread nor required by DEQAP procedures.

(3) The team found that NSMs were basically a compilation of transmittal sheets referencing applicable drawings. There appeared to be no organized treatment of problem and solution with appropriate analyses and supporting documentation referenced. The packages reviewed by the team could not be design verified or audited without recourse to the originator, which is not in accordance with ANSI N45.2.11 requirements.

(4) The team noted that no reference was made to ANSI N45.2.11 in procedures for design process control, design inputs, or design verification.

The above weaknesses regarding the apparent failure to implement the design control requirements of ANSI N45.2.11 were discussed with the licensee and will remain unresolved pending followup by the NRC Region II (50-269, 270, 287/86-16-19).

3.4.10 Operator Reliance on Control-Grade Equipment

The team was concerned that excessive reliance was placed on the operation of control-grade equipment (not safety related) within the EFW system for the successful functioning of the system. The only safety-related indication in the EFW system was the train A and B header flow indication, and the only safety-related controls were associated with the automatic start signals for the EFW pumps and the solenoid valves on the various EFW flow control valves that allowed them to fail open. Design engineering had treated design analyses and modifications associated with the remainder of the EFW system instrumentation as not safety related and had generally not applied the design requirements of ANSI N45.2.11. The inspection team determined that the licensee's maintenance practices and design activities were significantly less rigorous for non-safety-related equipment. The inspection team was concerned that these lower standards were applied to the non-safety-related equipment important to the operation of the EFW system. The following are examples of control-grade equipment associated with the EFW system and the consequences of failure of that equipment.

(1) SG level instrumentation and control solenoids for the EFW flow control valves were considered to be safety-related equipment, but the electro/pneumatic devices, manual loaders, and pneumatic actuators that fail open on loss of pneumatic supply were not safety related. The pneumatic sources for these valves were from non-safety-related sources of instrument air and backup nitrogen bottles. As described in Observation 3.4.3, if FDW-315 or FDW-316 remain open after SG levels reached the natural circulation point, pump runout could be reached.

(2) MS-87 was a control-grade pressure control valve in the steam supply to the EFW turbine. It received a control signal from control-grade

pressure transmitter PT-0057. On loss of non-safety-related pneumatic supply, MS-87 would fail open and relief valve MS-92 would then open to prevent overpressurization of the EFW pump turbine steam supply piping. However, MS-92 was undersized such that if MS-87 failed open, this piping could be pressurized above design values (see Observation 3.4.4). Additionally, failure of the pressure transmitter could cause MS-87 to remain shut in spite of an EFW system initiation, thus causing the potential loss of the turbine-driven pump.

(3) Although the upper surge tank (UST) was considered safety related and its contents were required to mitigate the consequences of a loss of main feedwater event, the level indication for this tank was control grade. Two differential pressure transmitters provided redundant level indication in the control room. One of the differential pressure transmitters was a pneumatic transmitter which provided the control room annunciator alarm (2 feet), a remote indicator, and a computer input for monitoring and alarm (7 feet). The other differential pressure transmitter used to monitor UST level was a Rosemount electronic transmitter which provided a redundant input to the computer for monitoring and alarm (7 feet).

Upon loss of non-safety-related air, the pneumatic level transmitter would fail to a zero level and the low UST level alarm (less than 2 feet of level remaining) would actuate. The operator must then rely on the Rosemount level indication, and no UST level alarm would be available to alert the operator that water was about to run out and that an alternate source of water for EFW pumps must be found. In this situation, the next alarm available to the operator would be the low suction pressure alarms associated with the motor-driven EFW pumps. These alarms were provided to alert the operator that the potential exists for loss of net positive suction head (NPSH) to an operating pump. However, the alarm set point was set so low (2 psig decreasing) that these instruments alarm at a water level in the suction piping near the pump. Consequently, a low suction pressure alarm would occur almost simultaneously with loss of NPSH. The original set point for these pressure switches was established at 1 foot when the motor-driven EFW pumps modification was prepared. No set point calculations were available even though the pressure switches were used to assist the operator in protecting the safety-related EFW pumps. In 1981 a modification was performed to change the UST low-level alarm from 1 foot to 2 feet. This modification was treated as a non-safety-related change and set point calculations were not documented and apparently not performed.

The team was concerned that incorrect level indication could mislead the operator and prematurely cause the shift from a preferred source to a non-preferred source of water. The team also was concerned that the lack of design analysis and documentation of an adequate design process was not consistent with the importance that the control-grade instrumentation has in the successful performance of the EFW system. The failure of this instrumentation during transients and accidents would only further increase operator action time. The team considered that excessive reliance may have been placed on the proper functioning of control-grade equipment and operator action.

The licensee had conducted no analysis demonstrating that sufficient time existed for the operator to recognize and compensate for malfunctioning or degraded performance of control-grade instrumentation associated with the EFW system.

The potential lack of accurate and reliable instrumentation and control was considered to be a weakness which could adversely affect the functional performance of the EFW system.

3.4.11 Safety-Related Classification of Instrumentation

The team reviewed safety-related classifications of instrumentation and the methods for determining proper classifications of equipment. Oconee flow diagrams (OFDs) were the principle documents used for determining safety-related classifications. However, OFDs did not indicate classification of instrumentation systems. It was necessary to consult instrument detail drawings to determine proper QA condition because a comprehensive list of safety-related instrumentation did not exist. The following weaknesses were found in this review.

(1) The team reviewed a sample of instrumentation detail drawings and found the following errors:

Instrument Detail Drawing Number	Problem
422CC-1, Rev. 14	OTSG level transmitters LT-80, 81, 82, and 83 that provide flow control control signals for positioning the EFW flow control valves FDW-315 and 316 were incorrectly shown as not safety related.
422M-37, Rev. 4, and 1422M-37, Rev. 4	EFW flow transmitters FT-129, 130, 153, and 154 were incorrectly shown as not safety related.
422BB-1B, Rev. 5, and 1422BB-1, Rev. 7	Reactor coolant flow transmitters FT-14 and 15 that provide RCS flow signals to the RPS were incorrectly shown as not safety related.

(2) The team also reviewed engineered safety feature system instrumentation for safety-related classification and found the following instruments were classified as not safety related per the design engineering instrument detail drawings.

Drawing Number Instrument Detail	Instrument
422X-3, Rev. 9	High-pressure injection flow (FT-7A/8A)
422X-6.01, Rev. 7	Low-pressure injection flow (FT-4A)
422Y-2, Rev. 7	Reactor building spray flow (FT-2A/3A)
422FF-1, Rev. 13	Core flood tank level (CFLT-11/14)
422X-13 Rev. 10	Borated water storage tank level (LT-2A/6)

The team found that the plant was calibrating all of the above-listed instruments, except reactor building spray flow, with a safety related procedure even though the design engineering drawings indicated that the instrumentation was not safety related. Based on the function of this instrumentation for assuring that engineered safety features are operating at required flow rates and tank levels, the team considered that these items should be considered safety related by design engineering and calibrated as such at the plant. The importance of this instrumentation for assurance of system function was further substantiated by the fact that Oconee Emergency Operating Procedures required operators to verify and maintain flow and levels using the above instrumentation.

(3) Design Engineering Department Supplementary Procedure ECPI-PR-4, "Mechanical Instrumentation Drawing Checklist," required that instrument detail drawings stamped "QA Condition 1" (safety-related) also be stamped with a safety-related exclusion stamp indicating whether all or part of the instruments were QA Condition 1 on the drawing. The team found the following drawings were stamped QA Condition 1 but did not have the required safety-related exclusion stamp. All of these drawings had been recently revised by the document upgrade program.

Drawing Number	Subject
422BB-3.01, Rev. 3	RC pressure transmitter
422BB-4, Rev. 13	Pressurizer level
422EE-1A, Rev. 7	Reactor building pressure
1422X-31, Rev. 1	HPI pump suction pressure gage
1422X-32, Rev. 1	LPI pump suction pressure gage
1422X-43, Rev. 3	SSF RC makeup pump discharge flow
1422X-48, Rev. 6	HPI pump crossover flow
1422Y-1, Rev. 1	Reactor building spray pump suction pressure gage

On the basis of the above drawing errors, the team considered that accurate safety-related classification of instrumentation systems was inadequate. The above weaknesses have been discussed with the licensee and will remain unresolved pending followup by the NRC Region II (50-269, 270, 287/86-16-20).

3.4.12 Safety Evaluations

Safety evaluations in accordance with 10 CFR 50.59 were reviewed during this inspection as a part of the design engineering design change process for NSMs. Since about 1984, design engineering safety evaluations were found to be originated by the Research and Projects Section (RPS) on DPC Form 160.2 of the DEQAP Procedure PR-160, "Nuclear Station Modification." Before this time, design engineering safety evaluations were accomplished by the design engineer.

(1) Safety evaluations reviewed by the team did not sufficiently document the bases for the determinations that unreviewed safety questions did not exist as required by 10 CFR 50.59. The following examples are typical of those safety evaluations reviewed.

(a) The safety evaluation for NSM ON-2346, replacement of RCS loop drain valves, did not discuss such items as equivalency of the replacement valves, code requirements, pressure ratings, or pipe configuration changes needed.

(b) The safety evaluation for NSM ON-2422, replacement of vent stack radiation monitors, did not discuss such items as equivalency of the replacement monitors with regard to flowrate, range, temperature, and power requirements.

(c) Modification NSM ON-1754 changed the UST low-level alarm from 1 foot to 2 feet. The safety evaluation concluded that no unreviewed safety question was involved because the alarm set point change is a reminder to the operator and the set point is more conservative. In the team's view the safety evaluation did not address all of the safety concerns.

Technical Specification 3.4 required that 5 feet of level be maintained in the UST. This level corresponded to approximately 30,000 gallons of water. Although the level was normally maintained at least 2 feet above this level, the EFW system design basis required 30,000 gallons of water be available from a safety-related storage tank. If the low UST level alarm set point is reached, the operator could shift to nonpreferred water sources such as the condenser hotwell. If the transfer were to occur rapidly, less than the 30,000 gallons of preferred water would be used. The volume between the Technical Specification level of 5 feet and the 2 feet alarm/switchover point was approximately 23,000 gallons. The safety evaluation also did not consider the accuracy of the non-safety-related level instrumentation which could alarm at a higher value with even less water used. The team concluded that raising the set point to 2 feet may not be conservative. The team considered that insufficient information was provided in the written safety evaluation to determine whether an unreviewed safety question existed.

(d) Modification NSM ON-1012 revised the safety-related electric power feed to reactor building cooling fan B by removing the load center X10 breaker and wiring directly from the substation transformer to the motor control center XS3. This indirectly changed the location of the protection for the 600-V feeder cable from the 600-V load center to the 4160-V switchgear. The effect of this change on associated electrical components was not addressed in the safety evaluation even though it was an apparent conflict with FSAR subsection 8.3.1.5.1, which stated that cables were sized in coordination with the trip elements selected for that particular breaker.

This same safety evaluation stated that power was normally removed from valves FDW 347 and CCW 269. However, the team found the circuits

for these valves were normally energized. This change was apparently made by operations personnel without concurrence from design engineering.

(2) Discussions with RPS personnel responsible for performing safety evaluations revealed that an unapproved instruction was used to describe general responsibilities and the process for accomplishing these evaluations. This document did not address the specific responsibilities and requirements necessary to ensure uniform, consistent, and adequately documented safety evaluations.

(3) A sample of approximately 20 RPS safety evaluations were reviewed during this inspection. Two of these, associated with NSMs ON-2401 and 2346, did not have the "FSAR sections reviewed and changed" section filled out as required by Part B of DPC Form 160.2. Also, the team noted that the FSAR sections reviewed by RPS were not required to be documented in Part A of Form 160.2. The team considered that this information should be recorded for informational purposes as well as for adequate review and approval of safety evaluations.

The above weaknesses regarding implementation and documentation of safety evaluations as required by 10 CFR 50.59 and DEQAP PR-160 will remain unresolved pending followup by the NRC Region II (50-269, 270, 287/86-16-21).

3.4.13 Drawing Deficiencies

Controlled design documents and drawings were found to contain mistakes and drafting errors or omissions. The following examples pertain:

(1) Drawings OEE-147, Revision 3, and OEE-147-1, Revision 4, elementary diagrams for valves MS-82 and MS-84, show the position indication lights for the steam admission valves for the turbine-driven EFW pump. These drawings show the indicating light circuits wired to incorrect valve limit switches so that neither position indicator light would be lit in the intermediate valve position. The valve position indication for these valves was apparently wired incorrectly as shown in these drawings. This design was in conflict with the rest of the plant design in which both indicating lights would be lit in the intermediate position. The team was concerned that an operator could misinterpret both lights being out as a failure of the actuator.

The correction of the valve position indication wiring for these valves will remain open pending followup by the NRC Region II (50-269, 270, 287/86-16-03).

(2) Drawing 0-702, Revision 15, "Unit 1 6900V and 4160V Station Auxiliary System One Line Diagram," indicated that the EFW pumps have 600 hp motors. While this is true on Units 2 and 3, the Unit 1 EFW pumps are driven by 500 hp motors.

(3) Drawing 0-705-A, Revision 32, "Unit 1 240/120 Vac Station Auxiliary Circuits One Line Diagram," identified the cables between the ICS inverter and the 1KI panelboard and between the ICS inverter and the Static Switch 1KI with the wrong cable numbers.

(4) Drawing 0-705, Revision 30, "Unit 1 120 Vac and 125 Vdc Station Auxiliary Circuits One Line Diagram," incorrectly identifies the battery charger normally connected to the dc distribution center number 1DCB as charger number 1CA. It should have been shown as 1CB.

(5) Drawing OEE-317-1Z, Revision 2, "Elementary Diagram 4KV and 7KV Load Shed under Emergency Conditions," stamped QA Condition 1, was not updated to show the EFW pump motors. This was typical for all 3 units. Unit 1 drawing OEE-117-1Z, Revision 2, did not have the required QA Condition stamp.

(6) Drawing 121D-1.1, Revision 3, "Flow Diagram of Emergency Feedwater System," failed to include the turbine-driven EFW pump discharge pressure switch FWD PS0420. The team confirmed that the pressure switch is shown on the instrument detail drawing 0-422M-10, Revision 3.

(7) Manufacturer's drawing OM 245-0682 provides the installation details for valve item 9J-280 corresponding to valves FDW-347 and CCW-269, identifies the electric operator for these valves as a Rotork type 14NA1, and provides its electrical characteristics. In contrast, the manufacturer's assembly drawing, OM-245-0654, identifies the motor operator as a type 40NA1 and does not provide it's electrical characteristics.

It appeared that the selection of the thermal overload protection for these valves, as documented on the motor control center unit specification drawing OM 308-0311, was based on a type 40NA1 operator.

(8) Examples of conflicts between the mechanical valve data list and motor control center drawings were noted.

Valve	MCC Data (Amperes)	Valve Data List (Amperes)
MS-84	7.9	0.8 - 1.6
C-156	3.6	2.1 - 4.2
C-391	1.6	3.9

(9) Drawing OFD-133A-25 Revision 2, "Flow Diagram of Condenser Circulating Water System (SSF Aux. Service)," indicates that valves 1CCW-268, 2CCW-268, 3CCW-268, 1CCW-287, 2CCW-287, and 3CCW-287 are normally open. These valves were actually normally closed as confirmed during a system walkdown.

(10) Drawing OFD-122A-1.4, Revision 1, "Flow Diagram of Main Steam System (Emergency FDW Pump Turbine Steam Supply & Exhaust)," indicates that design flow to the EFW turbine-driven pump steam line was 33,000 lbm/hour. Review of the steam flow versus shaft horsepower curve at 3400 rpm and 300 psig steam inlet pressure indicated that steam flow did not exceed 28,000 lbm/hour at 1000 horsepower. Because this horsepower corresponds to the lowest point on the pump head curve, it appeared that the steam design flow rate was overstated.

(11) Drawing OFD-121D-3.1, Revision 3, "Flow Diagram of Emergency Feedwater System," incorrectly showed that pressure gage 3FDWPG-0054 taps off downstream of flow transmitter 3FDWPT-0060. Instead the pressure gage came off a common sensing line before the pressure transmitter.

(12) Instrument Detail, 0-422M-34, Revision 7, "Emergency Feedwater Bypass Valve Control," contains an incorrect functional description of how valves FDW-315 and FDW-316 work. In addition, the drawing has incorrect train designations for instruments 1P271 and 1P273. The drawing also does not indicate which steam generator level transmitter was associated with which P/I controllers.

(13) Instrument Detail, 0-0422M-37, Revision 4, "Emergency Feedwater Header Flow to Steam Generator," has an incorrect Rosemount model number for flow transmitters 1FT153 and 1FT154. The model number should be 1152DP5E92PB.

The drawing deficiencies identified above are contrary to ANSI N45.2.11 requirements and will remain unresolved pending followup by the NRC Region II (50-269, 270, 287/86-16-22).

3.4.14 Temporary Lead Shielding

Weaknesses were identified in the program for control of temporary lead shielding. The use of shielding for ALARA considerations was evaluated to determine whether adequate design evaluations had been made. Thirteen lead shielding installations on safety-related piping were reviewed in this inspection. Twelve of these had been installed and removed on reactor coolant system (RCS), high pressure injection (HPI) system, decay heat removal, and pressurizer spray piping since January 1986. The other installation reviewed was installed on RCS piping at the time of this inspection. The following four concerns were identified in this review.

(1) No documented 10 CFR 50.59 evaluations had been accomplished for the temporary shielding installations reviewed during this inspection. Further, the team noted that Maintenance Directive V.B, "Shielding of Piping and Equipment," did not address the subject of 10 CFR 50.59 evaluations. IE Information Notice 83-64, "Lead Shielding Attached to Safety-Related Systems Without 10 CFR 50.59 Evaluations," dated September 29, 1983, addresses lead shielding installations and indicates that failure to analyze for possible seismic and structural effects (both dynamic and static) of lead shielding on safety-related systems potentially constitutes an unreviewed safety question.

(2) Maintenance Directive V.B did not address installation requirements or approved techniques to ensure that shielding was safely and correctly installed with approved installation materials and procedures. This information was apparently not available in other procedures as well.

(3) Maintenance Directive V.B required station engineers to determine and document the seismic classification of piping for temporary shielding applications. It did not require that analyses be accomplished to ensure that piping or structures were not overstressed when shielding was installed. No documented engineering calculations were found by the team to support lead shielding installations prior to January 1986. In January 1986, Maintenance Directive IV.N, "Determining Maximum Loads That Can Be Supported By Pipes or Other Structures," was issued to provide a standard method for determining maximum loads that could be supported by pipes and structures. However, the load tables and computational methods provided in Maintenance Directive IV.N were apparently not backed up by an official design engineering calculation to adequately document and support the methods and assumptions used in the calculation. The calculation appeared

to be based on an analysis for simply supported, uniformly loaded, straight beams but was used for complicated piping configurations without considering seismic loading, torsional stresses, effects of concentrated loads, or positive anchors at the supports.

(4) Two shielding installations were identified where more lead blankets had been installed on safety-related piping than had been authorized by the forms for Maintenance Directive V.B, "Record of Temporary Shielding Installation and Removal." These were:

(a) Serial Number 228, which authorized 20 blankets, but 42 were actually installed on reactor coolant system (RCS) piping.

(b) Serial Number 221, which authorized 96 blankets, but 100 were actually installed on high pressure system (HPI) letdown cooler piping.

The team found no documentation approving the additional shielding or analyses proving the piping or restraints had not been overstressed by the additional shielding.

The team noted that Maintenance Directive V.B allowed installation of temporary shielding on safety-related piping and components only that had been removed from operation. Based on the team's review of procedures and installations, the team considered that the potential existed for piping, restraints, and components to be overstressed or degraded while in a nonoperational condition and possibly affect system reliability during plant operation even though the temporary shielding had been removed. The above inadequacies in the program for control of temporary shielding were discussed with licensee management and will remain unresolved pending followup by the NRC Region II (50-269, 270, 287/86-16-23).

3.4.15 Document Upgrade Program

The document upgrade program was considered to be a strength. This effort consisted of preparing new revised flow diagrams, electric one-line diagrams, system descriptions, valve lists, an instrument list, and load lists. These documents were completed from original plant drawings and documents and those generated since Oconee started operation. The team considered this a positive effort by DPC to provide design information in a more readily accessible and useable manner. However, the team did find some errors in the mechanical and electrical system descriptions reviewed. For example, the following errors were found in the SSF electrical system description.

(1) The system description stated that electrical power to the SSF motor-operated isolation valves was normally removed when actually power was maintained to these circuits so that valve position could be monitored from the SSF. [See Observation 3.4.12(1)(d)].

(2) The system description indicated that the motor horsepower for these SSF isolation valves were 1/4 of the actual rating indicated on the electrical and mechanical drawings.

(3) The system description stated that no electrical protection was provided to components in the SSF systems when actually electrical protection was provided.

(4) The automatic interlocks described for the SSF auxiliary service water (ASW) pump control contained the following errors:

(a) The system description identified the wrong 4-kV breaker which is tripped by an engineered safeguards signal.

(b) The low flow trip interlock did not exist.

(c) The 4-kV feeder breaker OTS1-1 interlock in the starting circuit of the SSF ASW pump did not exist in the actual pump circuit.

3.4.16 Battery Design Capability

TS Section 3.7 bases were not consistent with the design basis for the station 125-V dc instrumentation and control batteries. The licensee stated the design basis for each unit's battery was based on one battery of any unit supplying its own load plus one additional panelboard (3 panelboards total). However, the TS stated that one unit's battery was capable of carrying the load for one entire unit (4 panelboards total). The team discussed this issue with licensee representatives who indicated that the applicable TS would be reviewed to determine if a change would be necessary. This item will remain open pending followup by the NRC Region II (50-269, 270, 287/86-16-04).

3.5 Quality Assurance

The Oconee quality assurance (QA) program was assessed to determine if the program, as implemented, was effective in identifying and correcting significant technical and operational deficiencies. This assessment was based on interviews with QA and supervisory personnel and on a detailed review of the documentation from eight of the most recently conducted audits during the period from February 1985 through April 1986 for the areas of design engineering, maintenance, operations, station modifications, and corrective action. Also included in the review were four surveillance reports, ten incident reports, and the qualifications of twelve QA auditors and four members of the QA surveillance group. The team concluded that although the written QA program appeared to be adequate, it was not effective in providing significant technical feedback to management. This conclusion was drawn from the following identified weaknesses:

(1) The QA audit and QA surveillance staffs lacked significant technical and nuclear plant operations experience. Audit plans and checklists typically lacked the detail needed to compensate for this lack of experience.

(2) Even when the QA audit and QA surveillance groups were augmented with technical specialists, significant technical and operational deficiencies, similar to the concerns identified in this NRC inspection report, were seldom identified.

(3) The corrective action program was considered superficial in causal analysis, the specification of required corrective action, corrective action verification, and the followup of the generic implications of issues.

(4) QA supervision and the Nuclear Safety Review Board (NSRB) did not appear to provide a critical review of audit reports, surveillance reports, and incident reports. Additionally, these QA program output documents often lacked sufficient detail to permit critical analysis.

An example of the weaknesses in the implementation of QA program was found in audit report NP-85-20(ON), conducted between October 14 and November 7, 1985, where the auditors, assisted by a technical specialist, examined the station lubrication program. The objective of the review was to "assure station equipment is being lubricated properly with the correct lubricants, and at specified intervals." The auditors identified 23 discrepancies while conducting a comparison between equipment listed as required to be lubricated in an uncontrolled maintenance department lubrication manual and Operations Procedure OP/O/A/1103/25. The audit report identified an unresolved item (URI) in relation to this issue. The URI stated, "It appears that no clear lubrication program exists . . . there is no assurance at this time that all components are being adequately lubricated." URIs were defined as items "that establish concern (and are not clear deficiencies) . . . and do not require . . . a written response" from management. Even though the auditors were able to draw a conclusion about the appearance of the lubrication program, the serious implications and consequences of an inadequately implemented lubrication program were not identified. The QA group performed no further followup and eventually accepted a corrective action commitment from the maintenance group to revise the operations procedure by August 1, 1986. No apparent in-depth investigation of the problems of the existing lubrication program was conducted as evidenced by the significant deficiencies identified in this area by the NRC inspection team (see Observation 3.1.1).

4.0 MANAGEMENT EXIT MEETING

An exit meeting was conducted on June 11, 1986, at the Oconee Nuclear Station. The licensee's representatives at this meeting are identified in the attached Appendix. The following NRC management representatives were also in attendance: Mr. James M. Taylor, Director, Office of Inspection and Enforcement; Mr. Roger D. Walker, Acting Deputy Regional Administrator, Region II; Mr. John F. Stolz, Director, PWR Project Directorate #6, Office of Nuclear Reactor Regulation; Mr. Vince Panciera, Deputy Director, Division of Reactor Safety, Region II; and Mr. Virgil L. Brownlee, Branch Chief, Division of Reactor Projects, Region II. The scope of the inspection was discussed and the licensee was informed that the inspection would continue with further in-office data review and analysis by team members. The licensee was informed that some of the observations could become potential enforcement findings. The observations were presented for each area inspected, and team members responded to questions from licensee's representatives.

APPENDIX

Persons Contacted

The following is a list of persons contacted during this inspection. There were other technical and administrative personnel who also were contacted. All personnel listed are Duke Power Company employees unless noted otherwise.

*H. B. Tucker - Vice President, Nuclear Production
*G. E. Vaughn - General Manager, Nuclear Stations
*G. W. Grier - Corporate QA Manager
*J. M. Frye - QA Manager, Audit Division
*J. O. Barbour - QA Manager, Operations
*C. Harlin - Oconee Compliance
*T. Barr - Oconee Technical Services Superintendent
*S. Nesbit - Mechanical Design
*J. Peele - Design Engineering
*H. Hammond - Design Engineering
*R. Matheson - Oconee Maintenance Services
*R. Sweigart - Operations Supervisor
*D. Murdoch - Station Support Principal Electrical Engineer
*T. McMeekin - Chief Engineer Electrical Division
*T. Wyke - Mechanical and Nuclear Design Engineering
*K. Canady - Nuclear Design Engineering
*N. Pope - Operations Superintendent
*T. Owen - Maintenance Superintendent
*P. Guill - Licensing Engineer
*W. McAlister - Maintenance Engineer Supervisor
*D. Compton - Licensing Engineer
*N. Rutherford - Licensing Manager
*M. Tuckman - Station Manager
*T. R. Dimmery - Supervising Design Engineer
*D. W. Murdock - Electrical Design Engineering
*E. G. Frampton - Supervising Design Electrical Engineer
*C. E. Kneeburg - Engineering Support Senior Electrical Engineer
*T. P. Harrall - Project Support Supervising Design Electrical Engineer
*W. A. Houston - Design Engineering
*J. E. Snyder - Supervising Engineer
*D. M. Hubbard - Supervising Engineer
*L. M. Coggins - Senior QA Engineer
B. Thompson - Maintenance Engineer
R. Entrekes - Maintenance
B. Carney - Maintenance Engineer Supervisor
A. Benge - Electrical Systems Engineer
J. E. Stoner - Controls Design Engineer
J. V. Boehme - Controls Engineer
M. H. Miller - Controls Engineer
G. D. Chronister - Layout Design
*D. Betts - Manager, Quality Audits, Florida Power Corporation
*T. Catchpole - Senior Nuclear QA Specialist, Florida Power Corporation

---

* Attended exit meeting on June 11, 1986.

J. S. Tannery - Electrical Engineer
C. Hope - Electrical Engineer
R. Gillespie - Nuclear Maintenance Group
F. Sevria - Nuclear Maintenance Group
R. E. Howell - Electrical Engineer
R. F. Wardell - Design Engineering
E. M. Weaver - Design Engineering
R. A. Knoerr - Project Services Supervisor