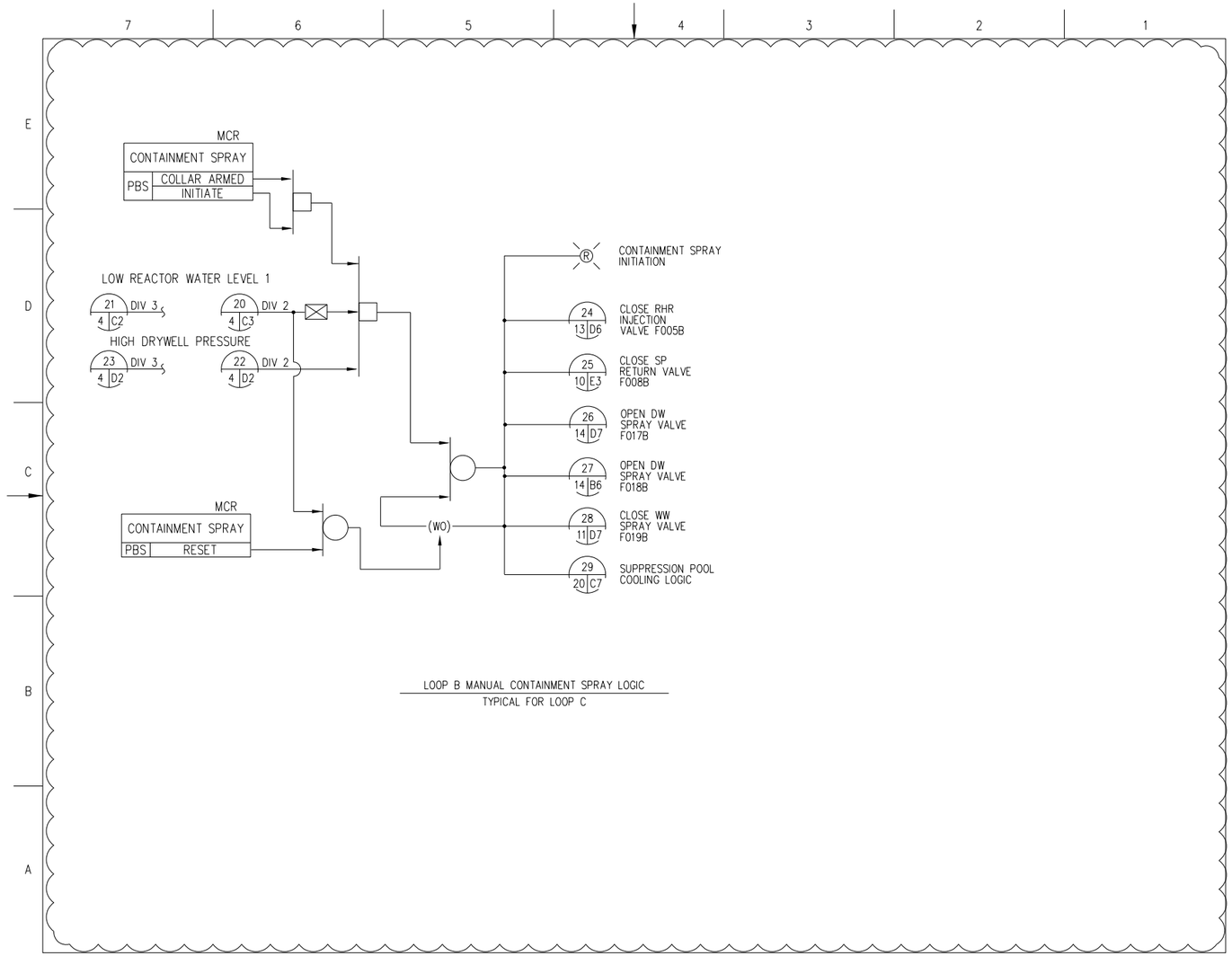

Figure 7.3-4 – Residual Heat Removal System IBD (Sheet 20a of 20)

NOTES:

1. ALL REFERENCE LDS MPL DESIGNATORS ARE PREFIXED BY E31 UNLESS INDICATED OTHERWISE.
2. NEGATIVE TRUE LOGIC IS USED IN THIS IBD TO DEPICT FAIL SAFE CONCEPTS FOR ALL SYSTEM ISOLATION FUNCTIONS. HIGH OR STATE 1 FOR THE UNTRIPPED NORMAL CONDITION AND LOW OR STATE 0 FOR THE TRIPPED CONDITION.
3. ALL 2/4 LOGIC SHALL REVERT TO 2/3 LOGIC DURING BYPASS OF A SINGLE DIVISION OF SENSORS. NOT MORE THAN ONE DIVISION OF SENSOR SHALL BE BYPASSED AT ANY ONE TIME.
4. THE MSIV PILOT SOLENOIDS SHALL BE POWERED FROM SAFETY DIVISIONS 1 AND 2 AS FOLLOWS:

SOLENOID / MSIV	1*	2	3
B21-F008A-D INBD	DIV II	DIV II	DIV I
B21-F009A-D OUTBD	DIV I	DIV II	DIV I

5. ALL SIGNAL OUTPUTS TO ALARMS AND COMPUTER SHALL BE OPTICALLY ISOLATED FROM ESSENTIAL CIRCUIT.
6. THE LAST TWO SHEETS OF THIS IBD DEPICT THE ELCS HARDWARE CONFIGURATION FOR PROCESSING THE CONTROL AND INTERLOCK LOGIC IN THIS IBD EXCEPT MSIV. THE BLOCK DIAGRAM ILLUSTRATES THE FOLLOWING SPECIAL FEATURES:
   A. BYPASS UNIT FOR DIVISION-OF-SENSORS BYPASS. (ONE UNIT PER DIVISION).
   B. DUAL REDUNDANT SLU MICROPROCESSORS WITH 2/2 OUTPUT VOTER TO PREVENT INADVERTENT INITIATION.
   C. AUTO-BYPASS OF EACH REDUNDANT MICROPROCESSOR CHANNEL ON LOOP FAILURE, WITH MANUAL BACKUP.

REFERENCE DOCUMENTS

	MPL NO.
1. NUCLEAR BOILER SYSTEM, IBD	B21-1030
2. NUCLEAR BOILER SYSTEM, P&ID	B21-1010
3. STANDBY LIQUID CONTROL SYSTEM, IBD	C41-1030
4. NEUTRON MONITORING SYSTEM, IBD	C51-1030
5. REACTOR PROTECTION SYSTEM, IBD	C71-1030
6. PROCESS RADIATION MONITORING SYSTEM, IBD	D11-1030
7. RESIDUAL HEAT REMOVAL SYSTEM, IBD	E11-1030
8. INTERLOCK BLOCK DIAGRAM STANDARD	A10-3070
9. LEAK DETECTION AND ISOLATION SYSTEM, IED	E31-1040
10. REACTOR CORE ISOLATION SYSTEM, IBD	E51-1030
11. REACTOR WATER CLEAN-UP SYSTEM, IBD	G31-1030
12. SUPPRESSION POOL CLEAN-UP SYSTEM, IBD	G51-1030
13. RADIOACTIVE WASTE SYSTEM, P&ID	K17-1010
14. REACTOR BUILDING COOLING WATER SYSTEM, IBD	P21-1030
15. HVAC NORMAL COOLING WATER SYSTEM, IBD	P24-1030
16. STANDBY GAS TREATMENT SYSTEM, IBD	T22-1030
17. ATOMOSPHERIC CONTROL SYSTEM, IBD	T31-1030
19. HEATING, VENTILLATING & AIR CONDITIONING SYSTEM, P&ID	U41-1010

MSIV OPERATIONAL MODES

OPERATING MODES / SOLENOID VALVES	1*	2	3
(1) MSIV AUTO/OPEN (PLANT NORMAL OPER.)	DE DE DE	E DE E	DE E E
(2) MSIV QUICK CLOSED	DE	DE	DE
(3) MSIV TEST CLOSED	E E E	DE E E	E E DE

E = ENERGIZED
DE =DE-ENERGIZED
* = TEST SOLENOID

ABBREVIATIONS:

OLU – OUTPUT LOGIC UNIT
TLF – TRIP LOGIC FUNCTION
DTF – DIGITAL TRIP FUNCTION
SLF – SAFETY SYSTEM LOGIC FUNCTION

MPL NO. E31-1030

NOTES AND REFERENCE DOCUMENTS

Figure 7.3-5 – Leak Detection and Isolation System IBD (Sheet 1 of 77)

TABLE OF CONTENTS

SH NO.	TITLE
1	NOTES & REFERENCE DOCUMENTS
2	CONTENTS
3	INDEX OF ALARMS
4	MSIV SENSORS & TRIP LOGIC – DIV 1
5	MSIV SENSORS & TRIP LOGIC – DIV 2
6	MSIV SENSORS & TRIP LOGIC – DIV 3
7	MSIV SENSORS & TRIP LOGIC – DIV 4
8	MSIV VOTING & CHANNEL BYPASS LOGIC – DIV 1
9	MSIV VOTING & CHANNEL BYPASS LOGIC – DIV 1
10	MSIV VOTING & CHANNEL BYPASS LOGIC – DIV 1
11	MSIV AUTO ISOLATION TRIP LOGIC – DIV 1
12	MSIV VOTING & CHANNEL BYPASS LOGIC – DIV 2
13	MSIV VOTING & CHANNEL BYPASS LOGIC – DIV 2
14	MSIV VOTING & CHANNEL BYPASS LOGIC – DIV 2
15	MSIV AUTO ISOLATION TRIP LOGIC – DIV 2
16	MSIV VOTING & CHANNEL BYPASS LOGIC – DIV 3
17	MSIV VOTING & CHANNEL BYPASS LOGIC – DIV 3
18	MSIV VOTING & CHANNEL BYPASS LOGIC – DIV 3
19	MSIV AUTO ISOLATION TRIP LOGIC – DIV 3
20	MSIV VOTING & CHANNEL BYPASS LOGIC – DIV 4
21	MSIV VOTING & CHANNEL BYPASS LOGIC – DIV 4
22	MSIV VOTING & CHANNEL BYPASS LOGIC – DIV 4
23	MSIV AUTO ISOLATION TRIP LOGIC – DIV 4
24	MSIV POSITION SENSORS LOGIC
25	MSL A INBOARD MSIV CONTROL LOGIC
26	MSL B INBOARD MSIV CONTROL LOGIC
27	MSL C INBOARD MSIV CONTROL LOGIC
28	MSL D INBOARD MSIV CONTROL LOGIC
29	MSL A OUTBOARD MSIV CONTROL LOGIC
30	MSL B OUTBOARD MSIV CONTROL LOGIC
31	MSL C OUTBOARD MSIV CONTROL LOGIC
32	MSL D OUTBOARD MSIV CONTROL LOGIC
33	MANUAL & AUTO MSL ISOLATION LOGIC – DIV 1
34	MANUAL & AUTO MSL ISOLATION LOGIC – DIV 2
35	MANUAL & AUTO MSL ISOLATION LOGIC – DIV 3
36	MANUAL & AUTO MSL ISOLATION LOGIC – DIV 4
37	INBOARD MSIV CONTROL LOGIC
38	OUTBOARD MSIV CONTROL LOGIC
39	ANNUNCIATORS – MSIV TRIP INDICATION
40	ANNUNCIATORS – MSIV TRIPPED IN BYPASS CHANNEL
41	LDS SENSORS & TRIP LOGIC – DIV 1
42	LDS SENSORS & TRIP LOGIC – DIV 2
43	LDS SENSORS & TRIP LOGIC – DIV 3
44	LDS SENSORS & TRIP LOGIC – DIV 4
45	LDS VOTING & BYPASS LOGIC – DIV 1
46	LDS VOTING & BYPASS LOGIC – DIV 2
47	LDS VOTING & BYPASS LOGIC – DIV 3
48	RHR AREA A TEMP TRIP LOGIC
49	RHR AREA B TEMP TRIP LOGIC
50	RHR AREA C TEMP TRIP LOGIC
51	RHR LOOP A ISOLATION LOGIC
52	RHR LOOP B ISOLATION LOGIC
53	RHR LOOP C ISOLATION LOGIC
54	RCIC AREA TEMP TRIP LOGIC
55	RCIC LOW SL PRESSURE TRIP LOGIC
56	RCIC HIGH SL FLOW TRIP LOGIC
57	RCIC ISOLATION LOGIC
58	CUW MASS DIFF FLOW TRIP LOGIC
59	CUW REG HX TEMP TRIP LOGIC
60	CUW NON-REG HX TEMP TRIP LOGIC
61	CUW VALVE ROOM TEMP TRIP LOGIC
62	CUW INBOARD VALVE ISOLATION LOGIC
63	CUW OUTBOARD VALVE ISOLATION LOGIC
64	CUW INJECTION & PURGE LINE VALVES ISOLATION LOGIC
65	CUW HEAD SPRAY VALVE ISOLATION LOGIC
66	DRYWELL FISSION PRODUCTS SAMPLING PUMPS
67	DRYWELL FISSION PRODUCTS ISOLATION VALVES
68	DRYWELL FISSION PRODUCTS MISC CIRCUIT LOGIC
69	SPCU ISOLATION LOGIC
70	DW LCW & HCW SUMP DRAIN LINES ISOLATION LOGIC
71	RCW/HNCW PCV VALVES ISOLATION LOGIC
72	AC SYSTEM & R/B HVAC ISOLATION LIOGIC
73	SGTS INTIATION LOGIC
75	MISC LOGIC & ANNUNCIATORS
76	ELCS/ECCS/LDS BLOCK DIAGRAM
77	ELCS/ECCS/LDS BLOCK DIAGRAM (CONT'D)

CONTENTS

Figure 7.3-5 – Leak Detection and Isolation System IBD (Sheet 2 of 77)

E31/LDS ANNUNCIATOR LIST

ITM. NO.	ALARM FUNCTION	SH NO.
1	MSL AUTO TRIP – ONE PER LOGIC DIVISION	33–36
2	MSL MANUAL TRIP – ONE PER LOGIC DIVISION	33–36
3	MSL TUNNEL TEMP HIGH – ONE COMMON TO FOUR DIVISIONS	39
4	MSL TURBINE AREA AMBIENT TEMP HIGH – SAME AS 3 ABOVE	39
		39
6	REACTOR WATER LEVEL LOW – SAME AS 3 ABOVE	39
7	MSL A STEAM FLOW HIGH – SAME AS 3 ABOVE	39
8	MSL B STEAM FLOW HIGH – SAME AS 3 ABOVE	39
9	MSL C STEAM FLOW HIGH – SAME AS 3 ABOVE	39
10	MSL D STEAM FLOW HIGH – SAME AS 3 ABOVE	39
11	MAIN CONDENSER VACUUM LOW – SAME AS 3 ABOVE	39
12	MSL PRESSURE LOW – SAM AS 3 ABOVE	39
13	TRIPPED MSIV VARIABLE IN BYPASSED CHANNEL A	40
14	TRIPPED MSIV VARIABLE IN BYPASSED CHANNEL B	40
15	TRIPPED MSIV VARIABLE IN BYPASSED CHANNEL C	40
16	TRIPPED MSIV VARIABLE IN BYPASSED CHANNEL D	40
17	RHR EQUIPMENT AREA A TEMP HIGH	48
18	RHR EQUIPMENT AREA B TEMP HIGH	49
19	RHR EQUIPMENT AREA C TEMP HIGH	50
20	RHR ISOLATED – LOOP A	51
21	RHR ISOLATED – LOOP B	52
22	RHR ISOLATED – LOOP C	53
23	RCIC EQUIPMENT AREA TEMP HIGH	54
24	RCIC STEAMLINE PRESSURE LOW	55
25	RCIC STEAMLINE FLOW HIGH	56
26	RCIC ISOLATED	57

ITM. NO.	ALARM FUNCTION	SH NO.
27	CUW REGEN HX AREA TEMP HIGH	59
28	CUW NON–REGEN HX AREA TEMP HIGH	60
29	CUW VALVE ROOM TEMP HIGH	61
30	CUW INBOARD VALVE ISOLATED	62
31	CUW OUTBOARD VALVE ISOLATED	63
32	CUW INJECTION VALVE ISOLATED	64
33	CUW HEAD SPRAY VALVE ISOLATED	65
34	DW INBOARD PCV VALVES ISOLATED	67
35	DW OUTBOARD PCV VALVES ISOLATED	67
36	DW FISSION PRODUCT SAMPLING SYSTEM ABNORMAL	68
37	SPCU ISOLATED	69
38	DRYWELL LCW DRAIN LINE ISOLATED	70
39	DRYWELL HCW DRAIN LINE ISOLATED	70
40	RCW/HNCW PCV VALVES ISOLATED	71
41	AC SYSTEM/HVAC ISOLATED	72
42	SGTS INTIATED ONE EACH PER TRAINS B & C	73
43	FC SYSTEM ISOLATED ONE EACH PER TRAINS B & C	74
44	MONITORED AREA DIFF TEMP HIGH	75
45	DRYWELL AREA TEMP HIGH – ONE COMMON TO FOUR DIVISIONS	75
46	CUW MASS DIFF FLOW HIGH	75
47	CUW MASS DIFF FLOW HIGH WARNING	75
48	DRYWELL AIR COOLER CONDENSATE FLOW HIGH	75
		75
50	DRYWELL DRAIN SUMPS WATER LEVEL HIGH	75

Figure 7.3-5 – Leak Detection and Isolation System IBD (Sheet 3 of 77)

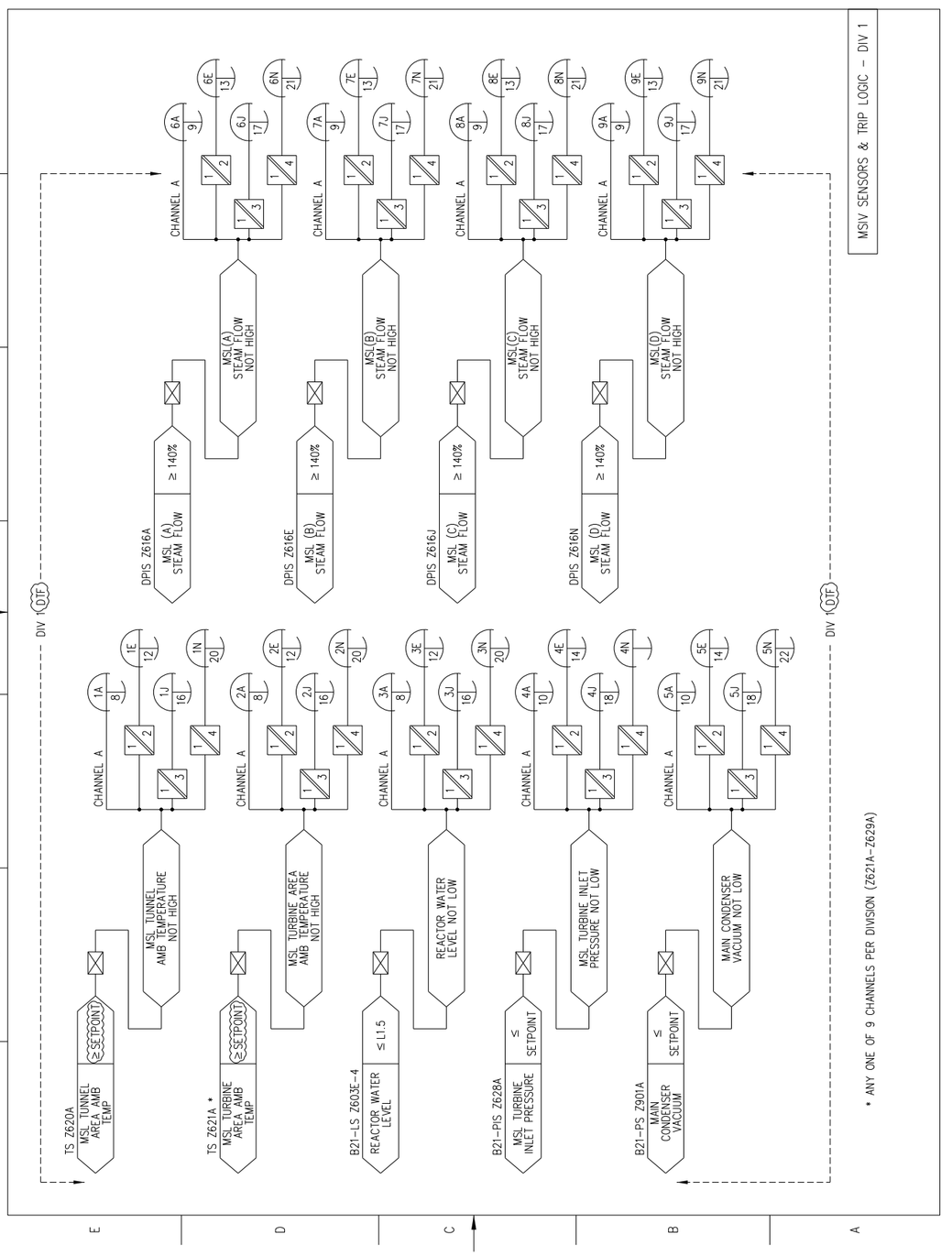

Figure 7.3-5 – Leak Detection and Isolation System IBD (Sheet 4 of 77)

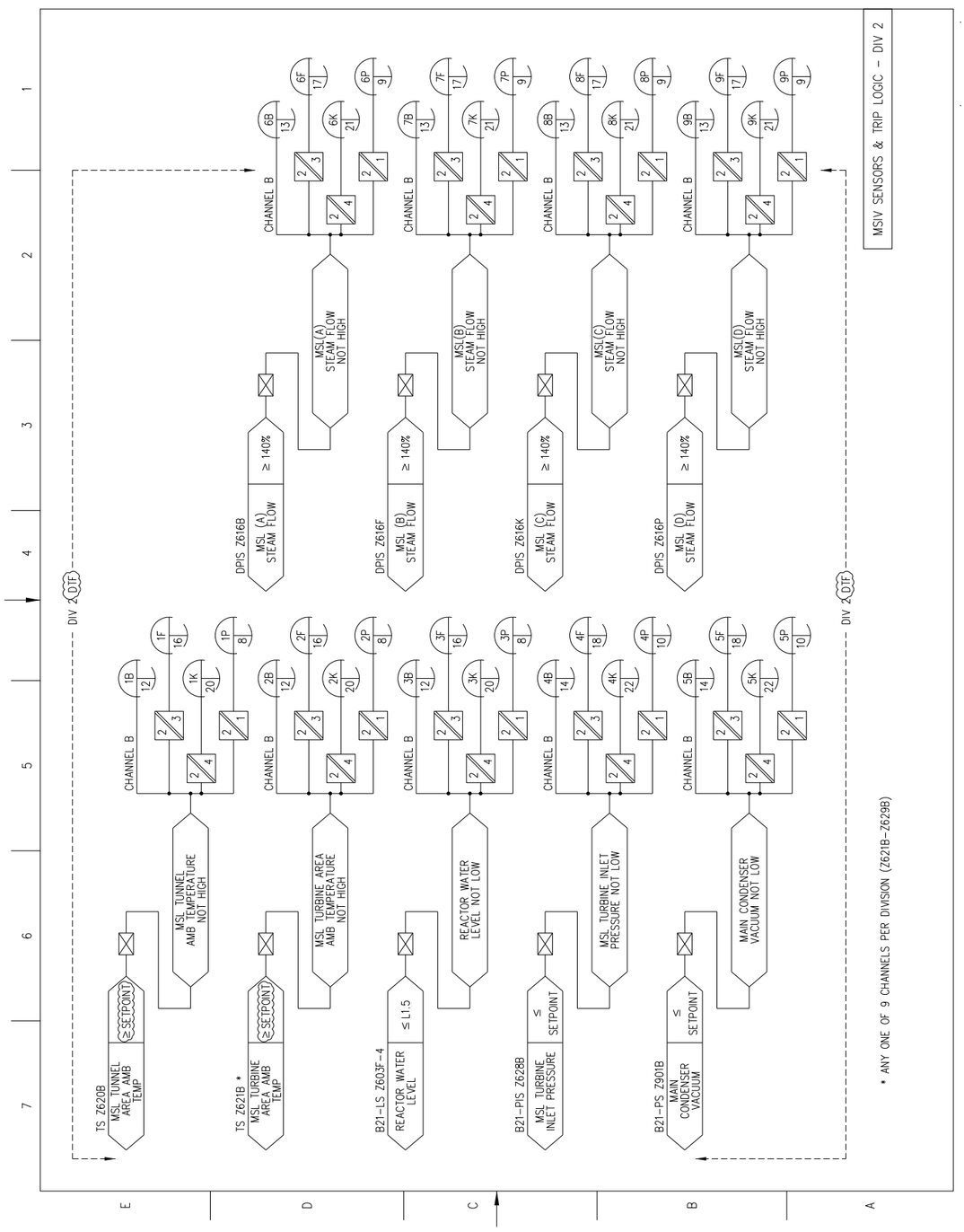

Figure 7.3-5 – Leak Detection and Isolation System IBD (Sheet 5 of 77)

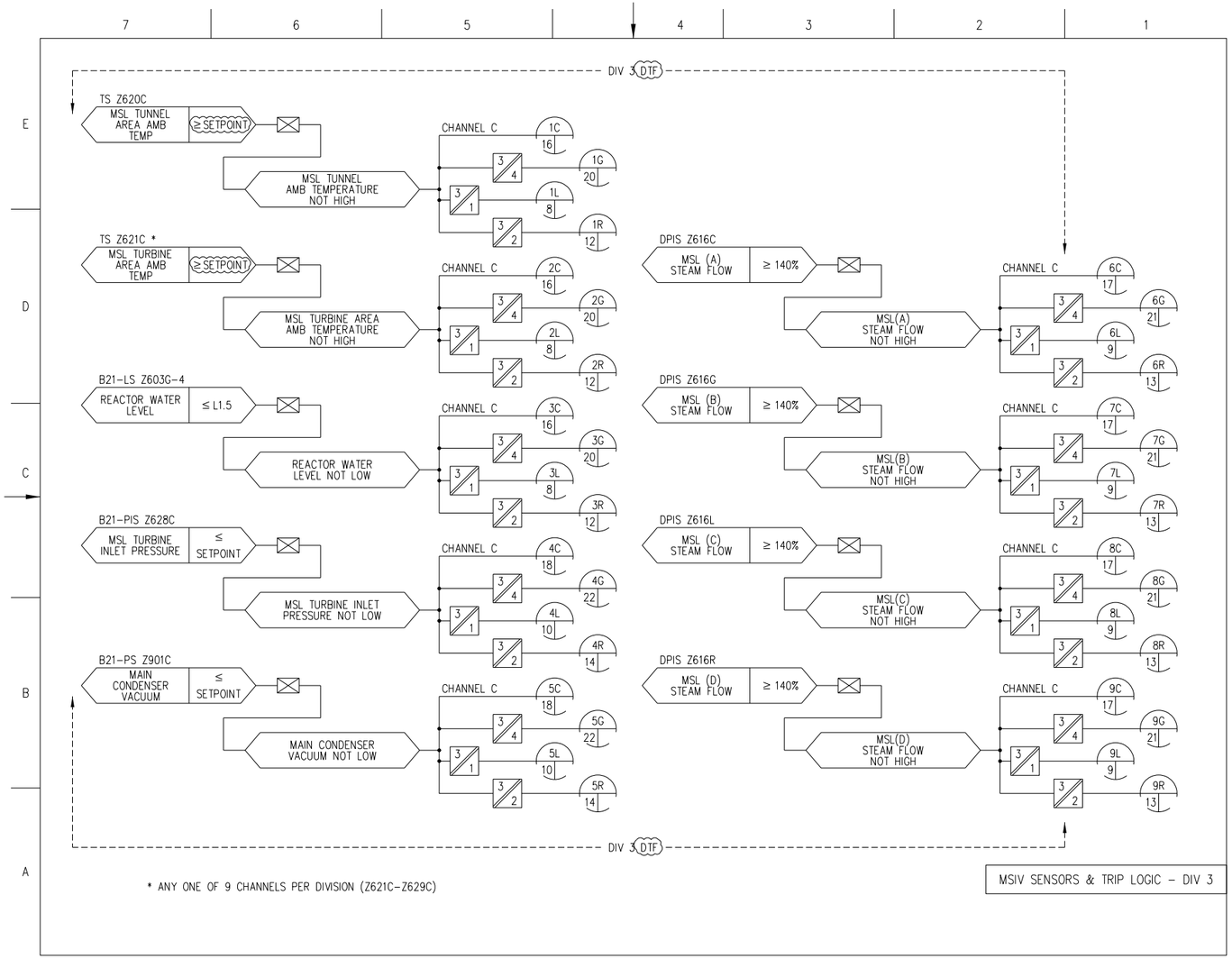

Figure 7.3-5 – Leak Detection and Isolation System IBD (Sheet 6 of 77)

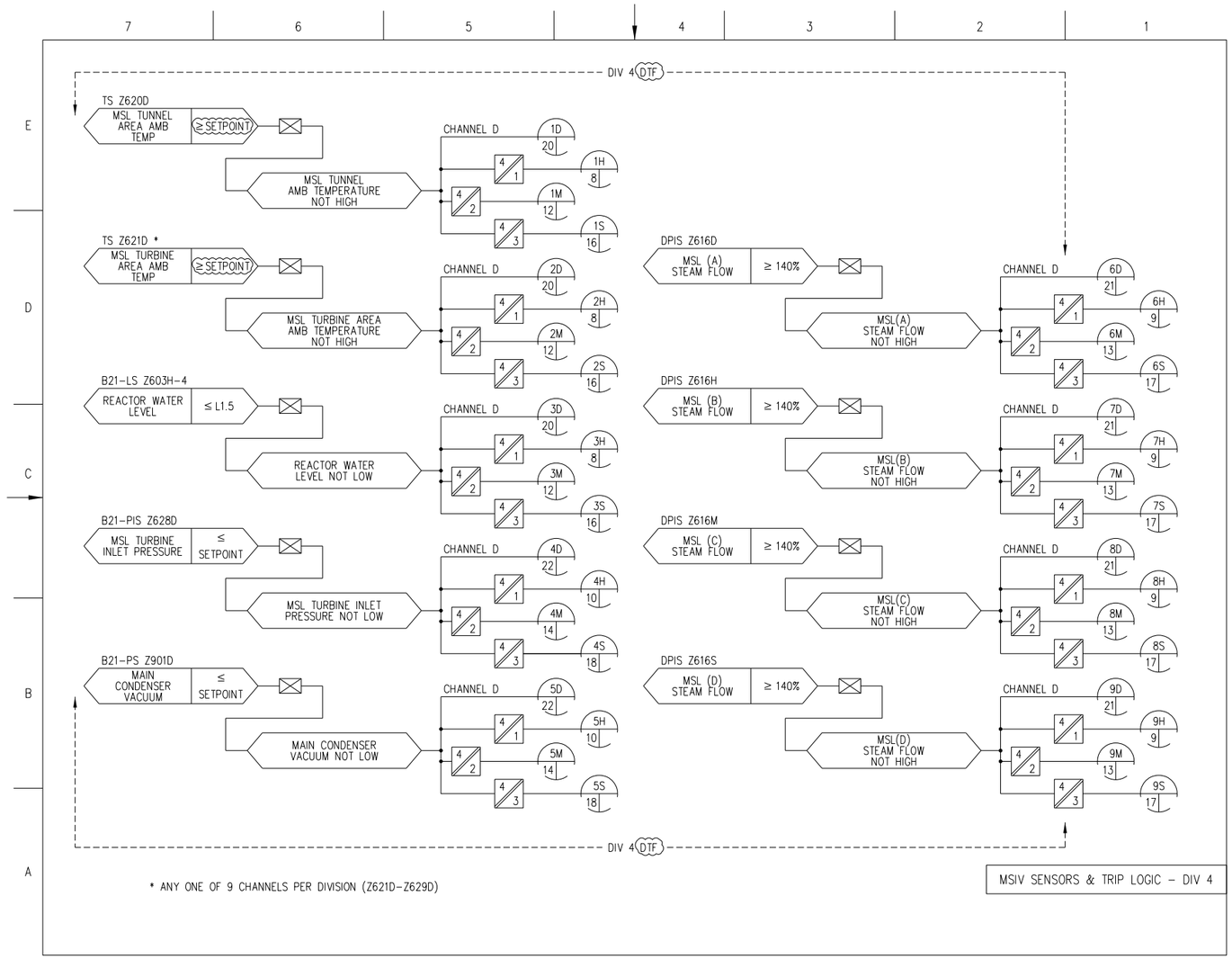

Figure 7.3-5 – Leak Detection and Isolation System IBD (Sheet 7 of 77)

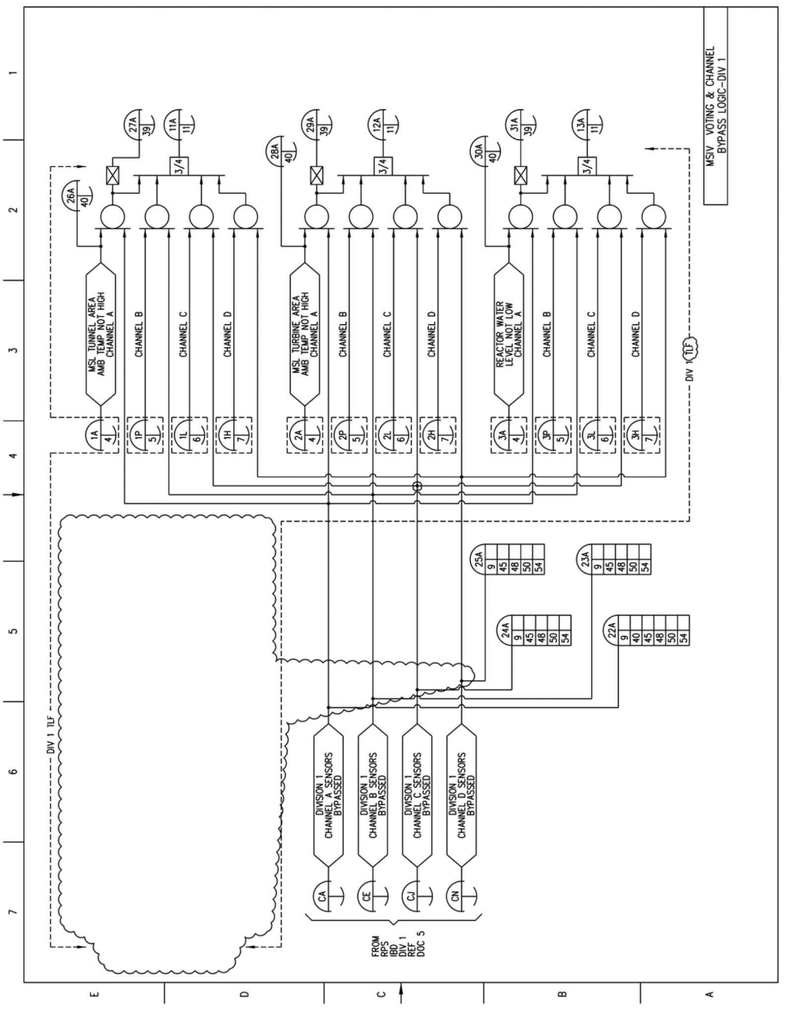

Figure 7.3-5 – Leak Detection and Isolation System IBD (Sheet 8 of 77)

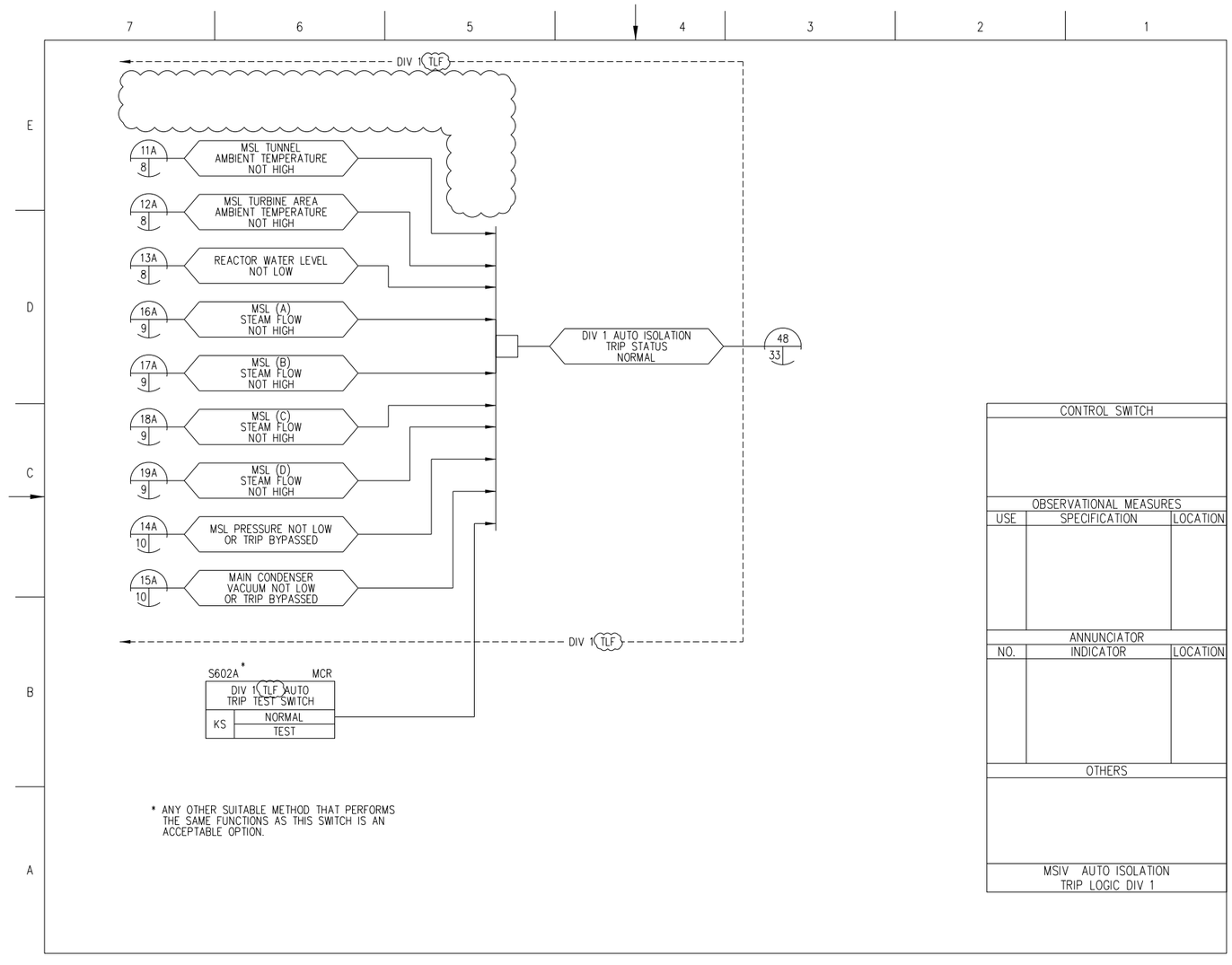

Figure 7.3-5 – Leak Detection and Isolation System IBD (Sheet 11 of 77)

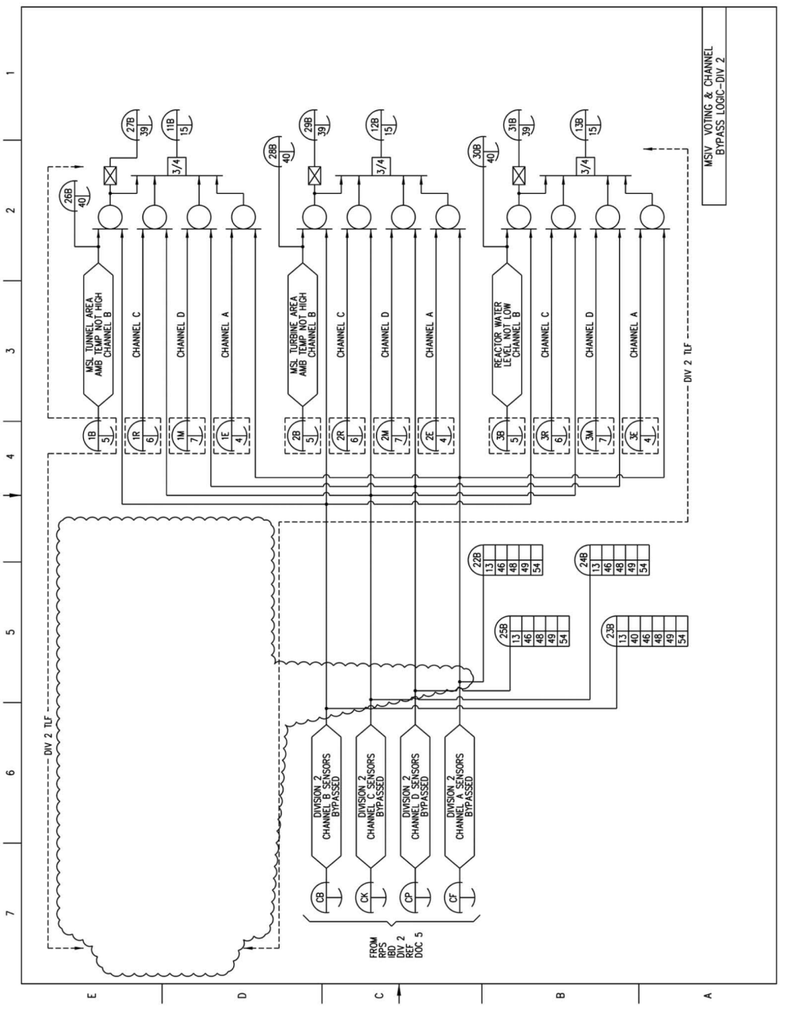

Figure 7.3-5 – Leak Detection and Isolation System IBD (Sheet 12 of 77)

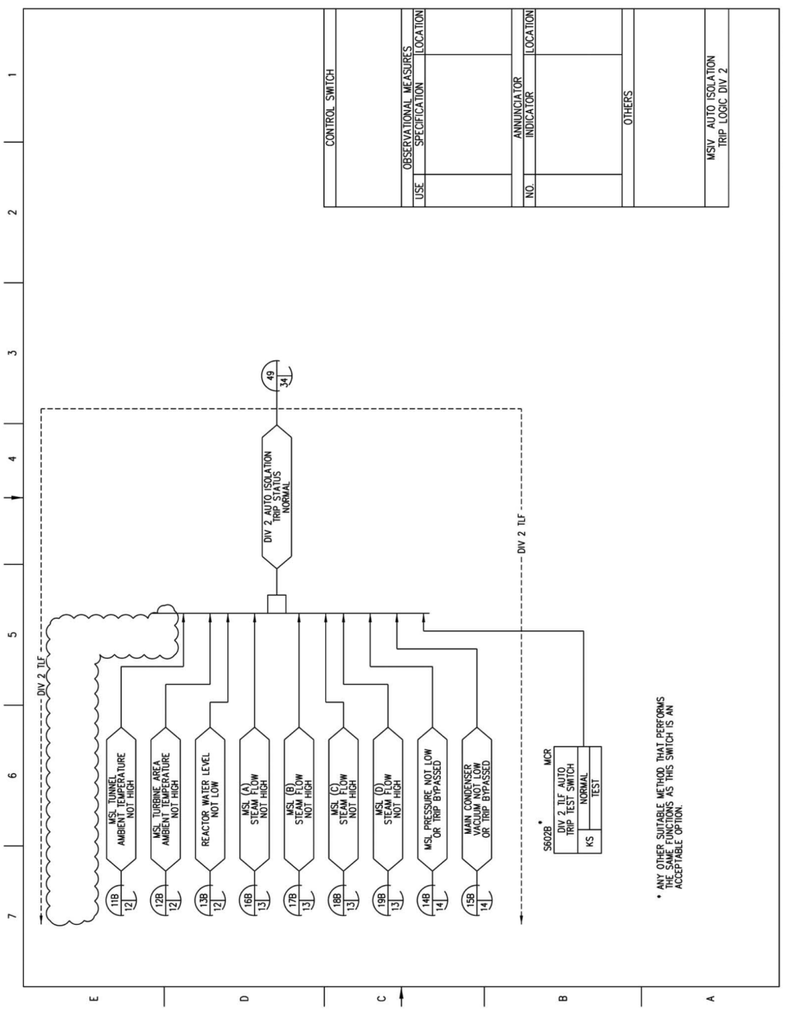

Figure 7.3-5 – Leak Detection and Isolation System IBD (Sheet 15 of 77)

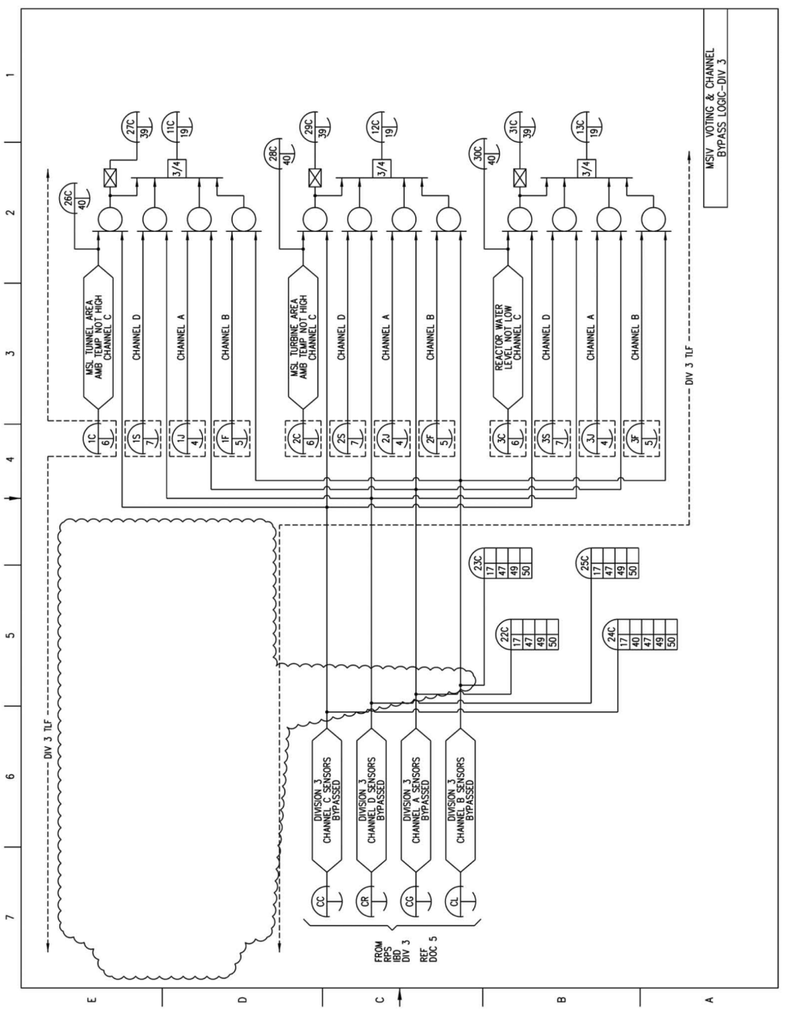

Figure 7.3-5 – Leak Detection and Isolation System IBD (Sheet 16 of 77)

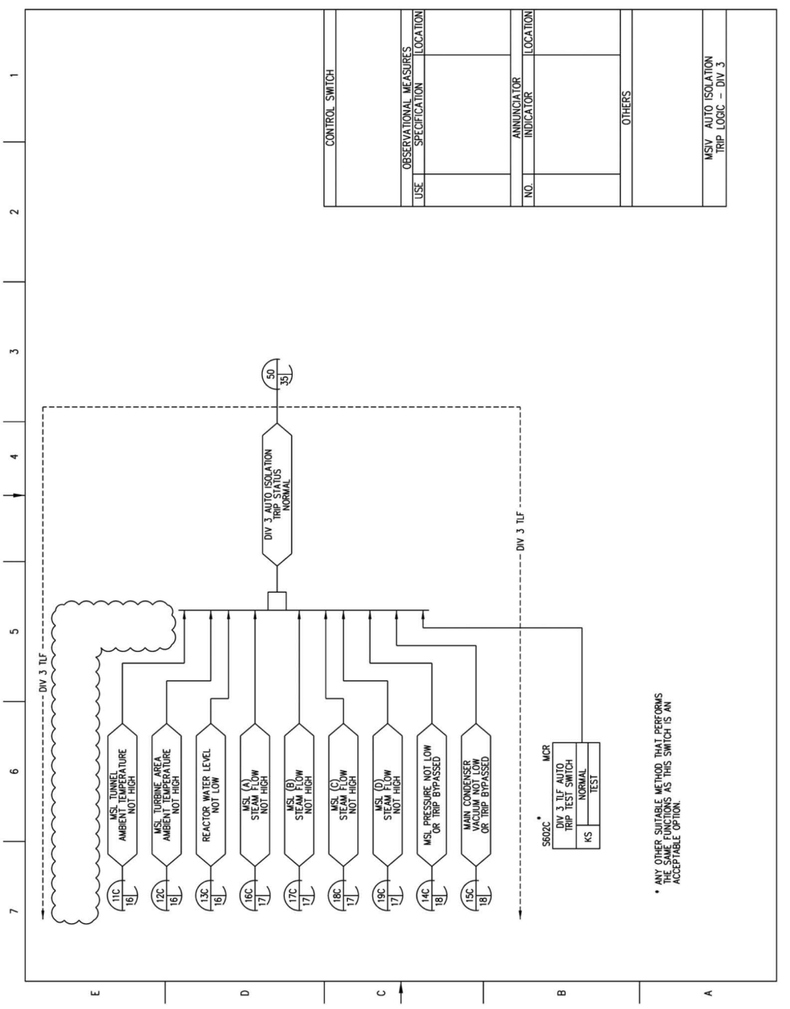

Figure 7.3-5 – Leak Detection and Isolation System IBD (Sheet 19 of 77)

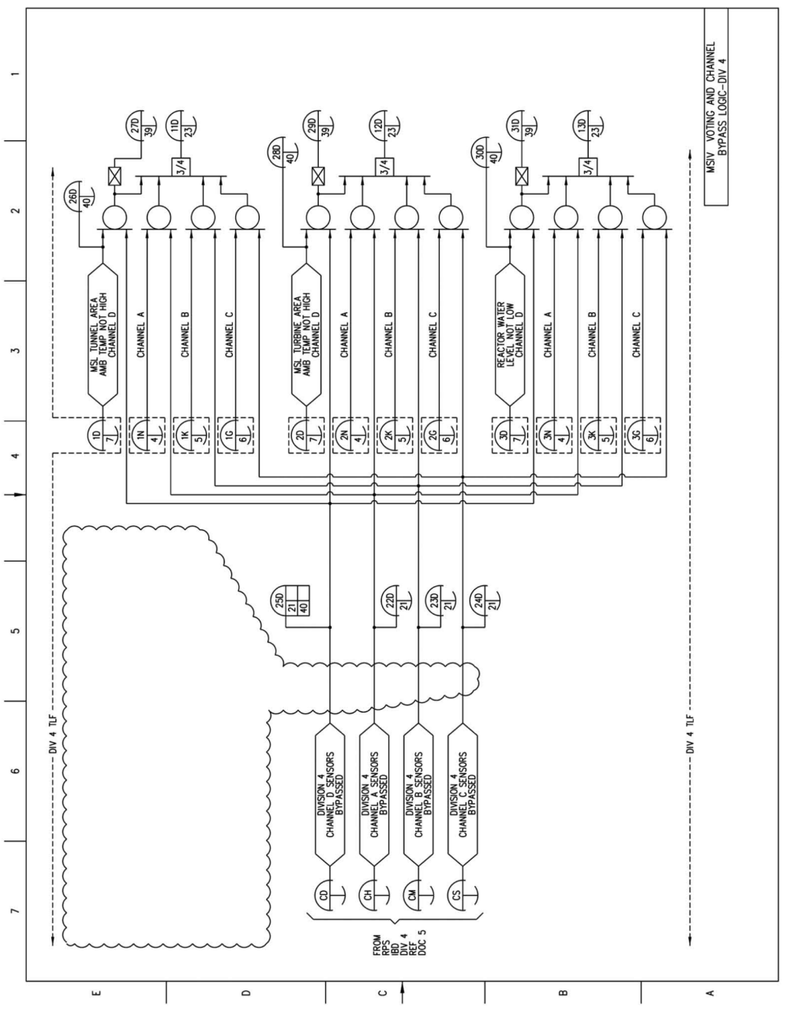

Figure 7.3-5 – Leak Detection and Isolation System IBD (Sheet 20 of 77)

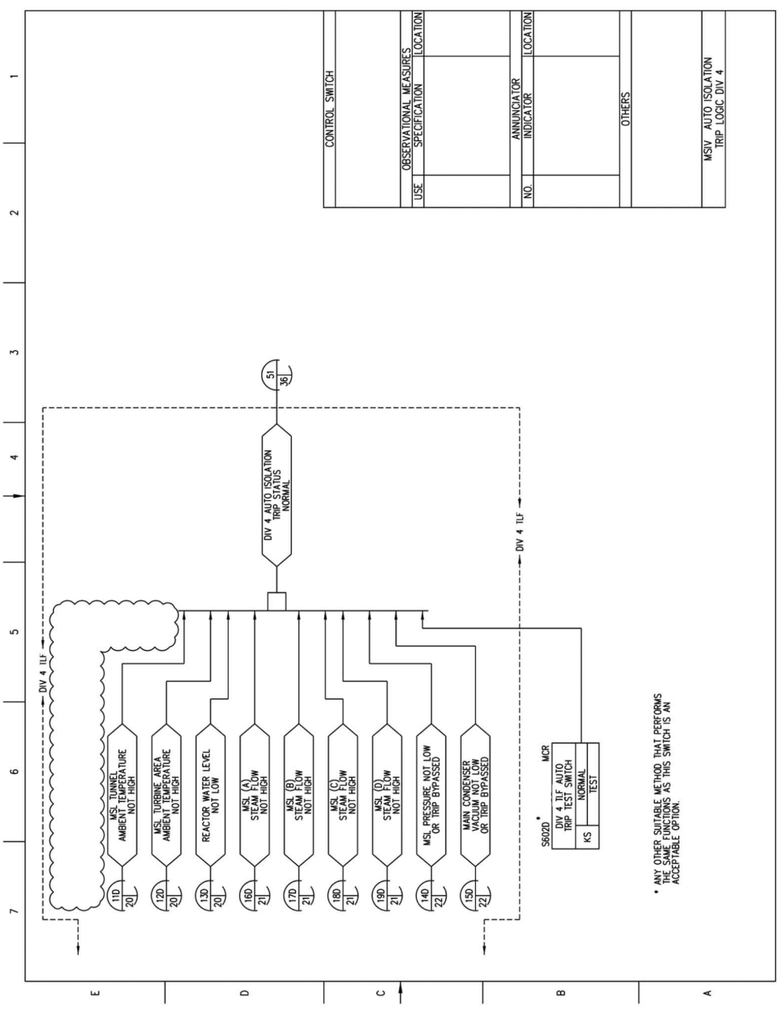

Figure 7.3-5 – Leak Detection and Isolation System IBD (Sheet 23 of 77)

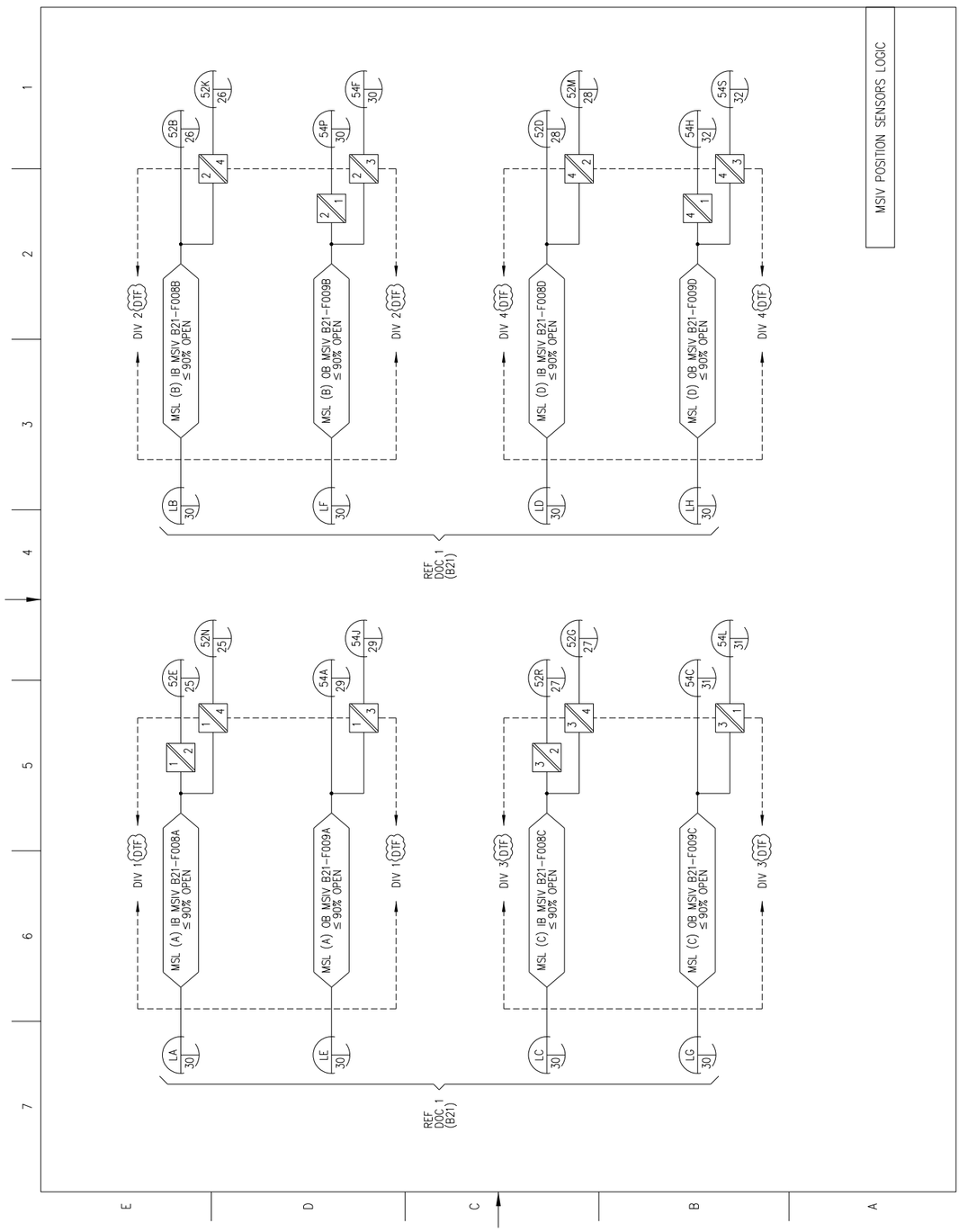

Figure 7.3-5 – Leak Detection and Isolation System IBD (Sheet 24 of 77)

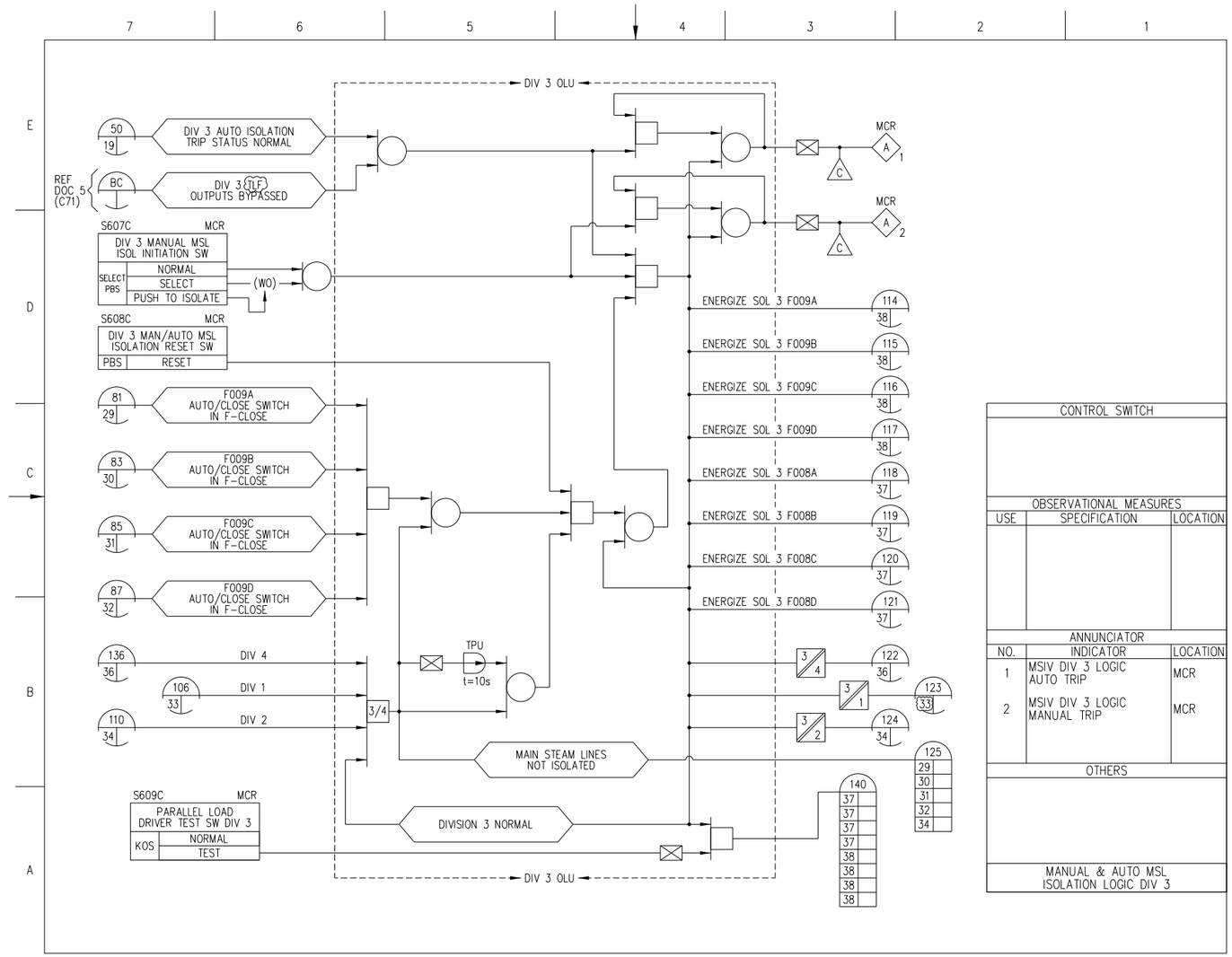

Figure 7.3-5 – Leak Detection and Isolation System IBD (Sheet 35 of 77)

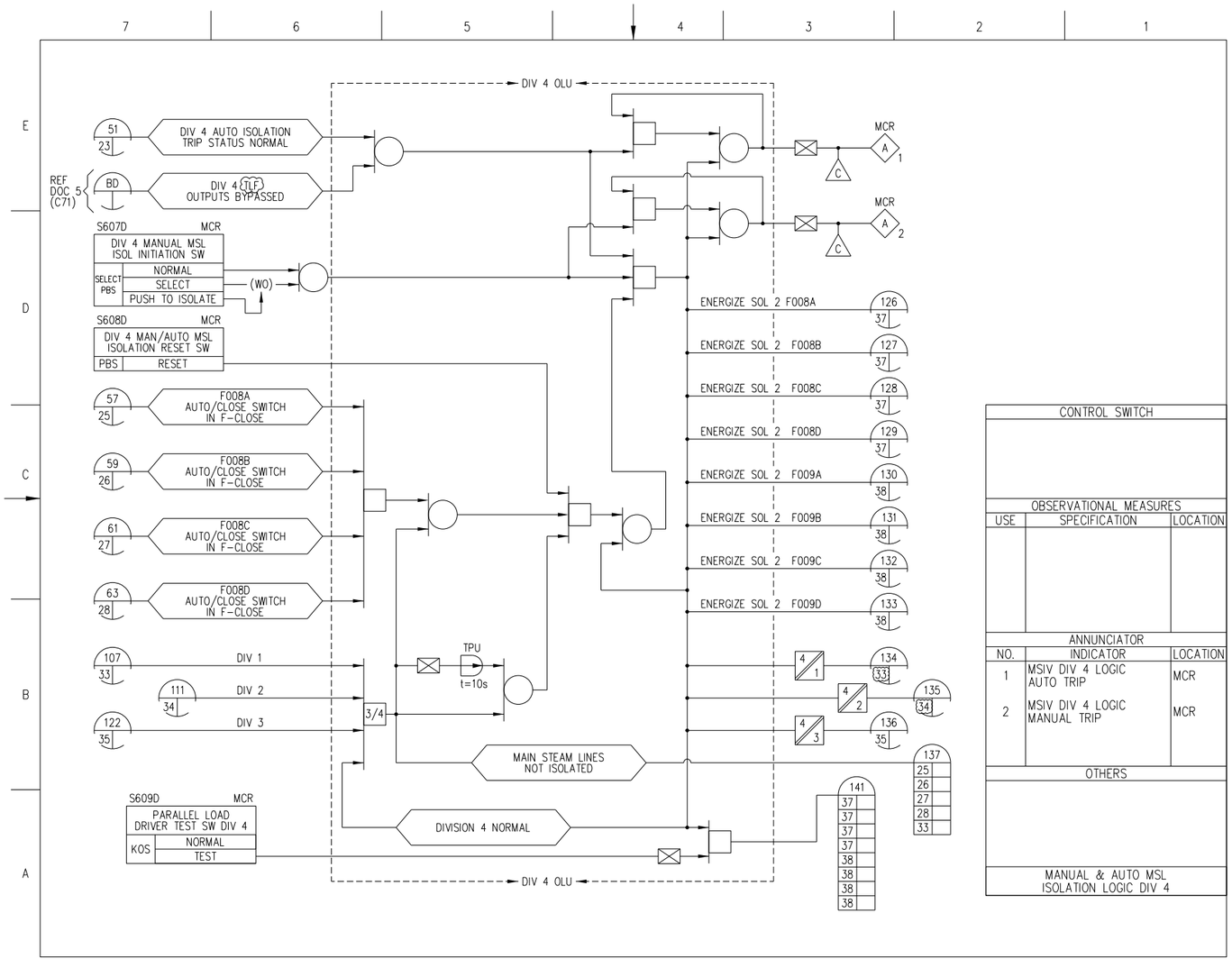

Figure 7.3-5 – Leak Detection and Isolation System IBD (Sheet 36 of 77)

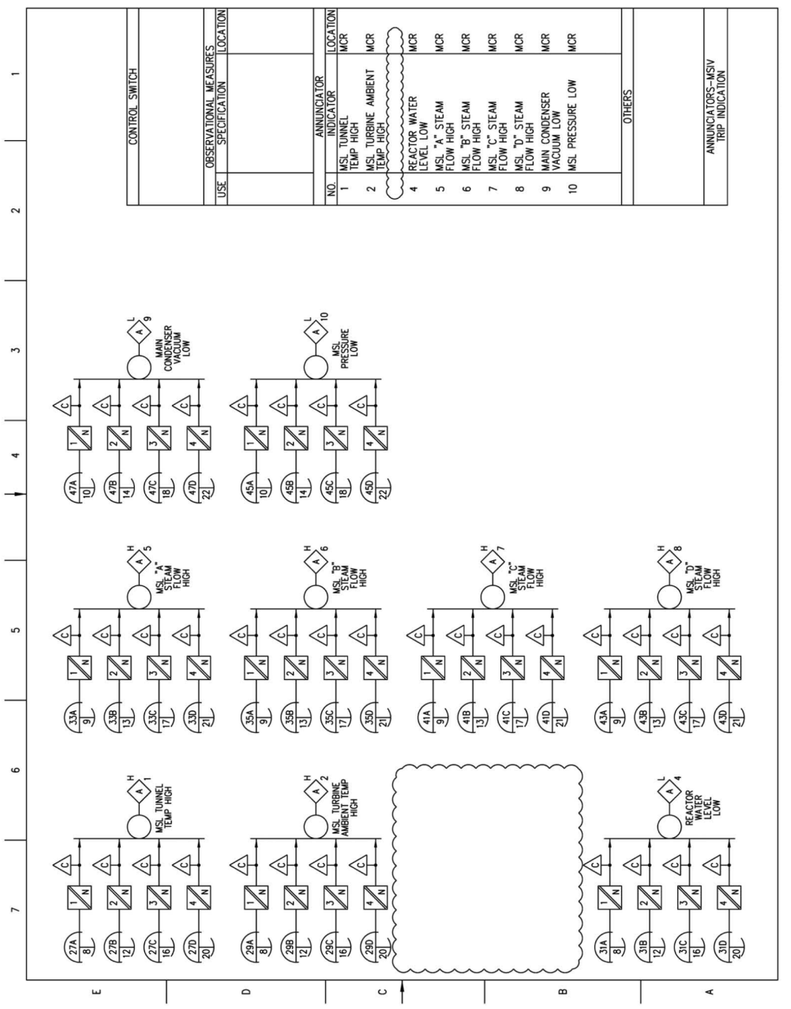

Figure 7.3-5 – Leak Detection and Isolation System IBD (Sheet 39 of 77)

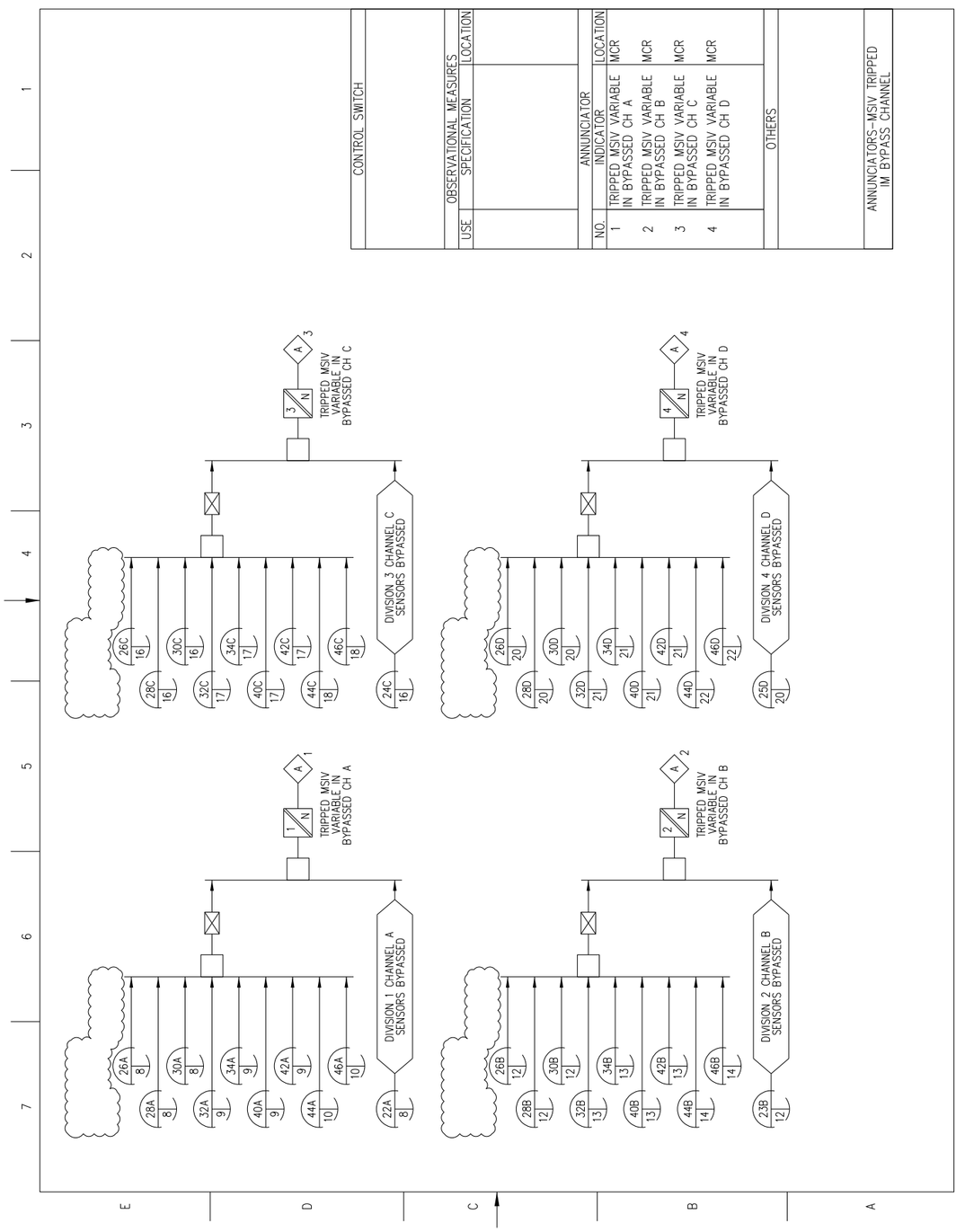

Figure 7.3-5 – Leak Detection and Isolation System IBD (Sheet 40 of 77)