PRIORITY 1
(ACCELERATED RIDS PROCESSING)

REGULATORY INFORMATION DISTRIBUTION SYSTEM (RIDS)

ACCESSION NBR:9503240036 DOC.DATE: 95/03/16 NOTARIZED: NO DOCKET #
FACIL:50-287 Oconee Nuclear Station, Unit 3, Duke Power Co. 05000287
AUTH.NAME AUTHOR AFFILIATION
HAMPTON,J.W. Duke Power Co.
RECIP.NAME RECIPIENT AFFILIATION
Document Control Branch (Document Control Desk)

SUBJECT: Forwards supplemental info re 940404 request for relief for second 10-yr ISI interval.

DISTRIBUTION CODE: A047D COPIES RECEIVED:LTR 1 ENCL 1 SIZE: 25
TITLE: OR Submittal: Inservice/Testing/Relief from ASME Code - GL-89-04

NOTES:

	RECIPIENT ID CODE/NAME	COPIES LTTR	COPIES ENCL	RECIPIENT ID CODE/NAME	COPIES LTTR	COPIES ENCL
	PD2-3 LA	1	1	PD2-3 PD	1	1
	WIENS,L	1	1			
INTERNAL:	ACRS	6	6	AEOD/SPD/RAB	1	1
	FILE CENTER 01	1	1	NRR/DE/EMCB	1	1
	NRR/DE/EMEB	1	1	NUDOCS-ABSTRACT	1	1
	OGC/HDS2	1	0	RES/DSIR/EIB	1	1
EXTERNAL:	LITCO BROWN,B	1	1	LITCO RANSOME,C	1	1
	NOAC	1	1	NRC PDR	1	1

NOTE TO ALL "RIDS" RECIPIENTS:
PLEASE HELP US TO REDUCE WASTE! CONTACT THE DOCUMENT CONTROL DESK, ROOM P1-37 (EXT. 504-2083) TO ELIMINATE YOUR NAME FROM DISTRIBUTION LISTS FOR DOCUMENTS YOU DON'T NEED!

TOTAL NUMBER OF COPIES REQUIRED: LTTR 20 ENCL 19

MAY

PRIORITY 1 DOCUMENT

Duke Power Company
Oconee Nuclear Site
P.O. Box 1439
Seneca, SC 29679

J. W. HAMPTON
Vice President
(803)885-3499 Office
(803)885-3564 Fax

DUKE POWER

March 16, 1995

U.S. Nuclear Regulatory Commission
Attention Document Control Desk
Washington, DC 20555

Subject: Duke Power Company
Oconee Nuclear Station, Unit 3
Docket No. 50-287
Second Ten Year Inservice Inspection Interval
Request for Relief No. 94-01
Supplemental Information

By letter dated April 4, 1994, Duke Power Company submitted Request for Relief No. 94-01 from certain ASME Code requirements for Oconee Unit 3. By letter dated January 9, 1995, the NRC staff requested additional information to assist the NRC staff's contractor review of this Relief Request. Please find this additional information in the Attachment.

In response to Item B of the Enclosure of the NRC January 9, 1995 letter requesting additional information, Duke Power has determined through calculation that the volumetric examination coverage exceeds 90%. Therefore, Duke requests to withdraw its request for relief from ASME code requirements for this particular weld (RPV shell-to-flange Weld 3RPV-WR19).

If there are any questions or further information is needed you may contact D. A. Nix at (803) 885-3634.

Very truly yours,

J. W. Hampton
Site Vice President

240046

A047 1/1

Printed on recycled paper

9503240036 950316
PDR ADOCK 05000287
Q PDR

attachment

xc(w/attch): Mr. L. A. Wiens
Office of Nuclear Reactor Regulation
U. S. Nuclear Regulatory Commission
Washington, DC 20555

Mr. Boyd W. Brown
INEL Research Center
2151 North Boulevard
P.O. Box 1625
Idaho Falls, Idaho 83415-2209

xc(wo attch): Mr. S. D. Ebneter
Regional Administrator, Region II
U. S. Nuclear Regulatory Commission

Mr. P. E. Harmon
Senior NRC Resident Inspector
Oconee Nuclear Station

Mr. Virgil R. Autry
Bureau of Radiological Health
SC Dept. of Health & Environmental Control
2600 Bull St.
Columbia, SC 29201

BWNT RESPONSES

TO

NRC QUESTIONS "A" AND "C"

OF

DUKE REQUEST FOR RELIEF 94-01

FOR

OCONEE 3 RPV 10 YEAR ISI EXAM

(EOC 13, JANUARY 1994)

Oconee-III

The scanning requirements as stated in BWNT Procedure ISI-138, Revision 15 are as follows:

Straight beam Scanning: Examination of the area of interest and all of the base material through which the angle beams will pass, shall be scanned to maximum extent practical, for the detection of laminar type discontinuities.

Angle Beam Scanning: The area of interest shall be examined by directing the 45°, 60°, and 70° angle beams perpendicular to the weld axis and parallel to the weld axis.

The 45° and 60° beams shall be scanned with two opposing beam directions, 180 degrees from each other. Wherever feasible, scanning shall be performed from each side of the weld. When scanning perpendicular to the weld axis, the adjacent base material in the examination volume must be scanned by both angle beams from both directions. Where configuration of adjacent parts of the component are such that scanning both sides of the weld is not feasible the use of a full node examination from one side of the weld is acceptable. Such limitations shall be documented on the examination record.

The near surface (I.D.) volume shall be scanned by directing a 70°, L-Wave angle beam perpendicular and parallel to the weld axis from at least one direction so that the beam passes through all of the area of interest.

Question A

Weld 3RPV-WR34

The lower circumferential head-to-shell weld 3RPV-WR34 was examined to the maximum extent possible. The axial scans were performed from the shell side above the weld using a full node examination method (See Figure 1) due to obstructions from the flow stabilizer stubs on the head below the weld (See Figures 2A and 2B). The (12) core guide lugs which are located 30° between centers along the circumference of the weld restrict axial scanning to (12) segments between the lugs (See Figure 3). Based on the configuration of the ARIS Alternate Transducer head (See Figure 4) the 0° and 70° axial scan obtained 15.3° out of 30° for a scan coverage of 51% and a total scan length of 183.6°, the 45° and 60° axial scans obtained 19.5° out of 30° for a scan coverage of 65% and a total scan length of 234° along the circumference of the weld.

The transducer scan ranges (See Figure 1) for the axial scans are presented in the following table:

Transducer Scan Ranges:

Transducer Angle	ARIS Scan Coordinate	ARIS Alternate Transducer Head Scan Range (As Measured from the center of the Head)	Transducer Scan Range (As Measured from the center of the Transducer)
0°-L	"Z" in inches	Start: 299.60" Stop: 316.04"	Start: 299.60" Stop: 316.04"
45°-Shear	"	Start: 299.60" Stop: 316.04"	Start: 302.70" Stop: 319.14"
60°-Shear	"	Start: 299.60" Stop: 316.04"	Start: 299.60" Stop: 316.04"
70°-RL	"	Start: 299.60" Stop: 316.04"	Start: 299.60" Stop: 316.04"

The actual volume examined between the core guide lugs for the near surface axial scan is shown in Figure 5 and the 45° and 60° full node examination volumes are shown in Figure 6.

The total weld length examined for the axial scans:

Angle	Direction	Total Examination Length Achieved	% of Total Examination Length Achieved
0°		183.6° of 360°	51%
45°	Axial	234° of 360°	65%
60°	Axial	234° of 360°	65%
70°	Axial	183.6° of 360°	51%

The volume examined in the axial direction between the core guide lugs:

Angle	Direction	Volume Examined (%)
45° Base Metal	Perpendicular to the weld	100%
45° Weld	Perpendicular to the weld up	100%
45° Weld	Perpendicular to the weld down	99.47%
60° Base Metal	Perpendicular to the weld	99.80%
60° Weld	Perpendicular to the weld up	100%
60° Weld	Perpendicular to the weld down	82.74%
70° Near Surface	Perpendicular to the weld	87.1%

The volume examined in the axial direction below the obstruction from the core lugs:

Angle	Direction	Volume Examined (%)
45° Base Metal	Perpendicular to the weld	0%
45° Weld	Perpendicular to the weld up	0%
45° Weld	Perpendicular to the weld down	0%
60° Base Metal	Perpendicular to the weld	0%
60° Weld	Perpendicular to the weld up	0%
60° Weld	Perpendicular to the weld down	0%
70° Near Surface	Perpendicular to the weld	0%

Based on the configuration of the ARIS Alternate Transducer head (See Figure 4) the 0° and all of the circumferential scans obtained 15.3° out of 30° for a scan coverage of 51% and a total scan length of 183.6° along the circumference of the weld.

The circumferential scan indexing limits for the ARIS alternate transducer head are "Z"=309.86 to 316.02 at the center of the alternate head. The actual circumferential scan volume examined between the core guide lugs is limited due to the obstruction of the flow stabilizer stubs and the transition area between the shell and lower head which prevents increased scan coverage by the ARIS alternate transducer head (See Figures 1, 2A and 2B).

The actual volume examined between the core guide lugs for the circumferential scan is shown in Figure 5.

The total weld length examined for the circumferential scans:

Angle	Direction	Total Examination Length Achieved	% of Total Examination Length Achieved
0°		183.6° of 360°	51%
45°	Parallel to the weld	183.6° of 360°	51%
60°	Parallel to the weld	183.6° of 360°	51%
70°	Parallel to the weld	183.6° of 360°	51%

The volume examined in the circumferential direction between the core guide lugs:

Angle	Direction	Volume Examined (%)
0°	Total examination area	31.70%
45° Base Metal and Weld	Parallel to weld	67%
60°Base Metal and Weld	Parallel to the weld	67%
70° Near Surface	Parallel to the weld	67.1%

The volume examined in the circumferential direction below the obstruction from the core guide lugs:

Angle	Direction	Volume Examined (%)
0°	Total examination area	0%
45° Base Metal and Weld	Parallel to weld	0%
60°Base Metal and Weld	Parallel to the weld	0%
70° Near Surface	Parallel to the weld	0%

Aggregate Coverage is defined as "the combined coverage using different transducers and different directions due to problems scanning the welds".

Partial Aggregate Coverage is defined as "the amount of coverage obtained had there been no physical interferences. This includes but not limited to configuration, surface condition (i.e. clad patches), etc".

Actual Aggregate Coverage is defined as "the amount of coverage obtained due to the physical interferences".

The method used to calculate the total examination coverage was to divide the volume examined by the total volume required to be examined for each angle. This percentage was then weighed against the required examination volume for that angle to determine an actual aggregate coverage.

The average coverage is obtained by adding the percentage covered by each angle in each required direction and dividing by 100 times the total number.

The partial aggregate coverage for the examination area between the lugs is calculated as follows:

Axial			Circumferential			
70	**60**	**45**	**70**	**60**	**45**	**0**
87.1%	97.7%	99.9%	67.1%	67.0%	67.0%	31.7%

Aggregate Coverage =

[(87.1 +67.1) x 8.31 + (67.0 +67.0 + 31.7) x 53.27 +(97.7 + 99.9) x (7.59 x 2 + 45.68)] /
[8.31 x 2 + 53.27 x 3 +(7.59 x 2 + 45.68) x 2]

Partial Aggregate Coverage = 74.2%

The actual coverage for this weld is as follows:

Axial			Circumferential			
70	**60**	**45**	**70**	**60**	**45**	**0**
44.4%	63.4%	64.8%	34.2%	34.2%	34.2%	16.2%

The aforementioned numbers were derived from the following calculations:

70°-Axial =87.1 x 51/100=44.4% 60°-Axial=97.7 x 65/100=63.4% 45°-Axial=99.9 x 65/100=64.8%

70°-Circ=67.1 x 51/100=34.2% 60°-Circ=67.0 x 51/100=34.2% 45°-Circ=67.0 x 51/100=34.2%

0°-Circ=31.7 x 51/100=16.2%

*The first number in the equation is the coverage for each angle and direction for the area scanned between each lug.
**The second number in the equation is the percentage of coverage achieved along the length of the weld for each angle and direction. This number will reflect the scan limitations due to the interference with the core guide lugs

Aggregate Coverage =

[(44.4 + 34.2) x 8.31 + (34.2 + 34.2 + 16.2) x 53.27 +(63.4 + 64.8) x (7.59 x 2 + 45.68)] / [8.31 x 2 + 53.27 x 3 +(7.59 x 2 + 45.68) x 2]

Actual Aggregate Coverage = 43.5%

The average coverage is calculated as follows:

Axial			Circumferential			
70	**60**	**45**	**70**	**60**	**45**	**0**
44.4%	63.4%	64.8%	34.2%	34.2%	34.2%	16.2%

Average Coverage =

44.4 + 63.4 + 64.8 + 34.2 +34.2 + 34.2 + 16.2/700

Actual Average Coverage = 41.6%

Overview of 3RPV-WR34

Weld 3RPV-WR34 is obstructed by (12) core guide lugs. The total obstructed area for each lug is 10.5° for the axial scans, excluding the near surface and 0° scans. This results in a total obstruction of 126° for the axial scans.

The total obstructed area for each lug is 14.7° for the circumferential scans, including the axial near surface and 0° scans. This results in a total obstruction of 176.5° for these scans.

The actual circumferential scan volume examined between the core guide lugs is limited due to the obstruction of the flow stabilizer stubs and the transition area between the shell and lower head which prevents increased scan coverage by the ARIS alternate transducer head. This results in a lower percentage of coverage from the straight beam (0°) transducer (31.70%) including the circumferential scan coverage from the 45°, 60°, and 70° transducers (67%) for the examination area between the lugs.

The axial scans were performed from the shell side above the weld using a full node examination method due to obstructions from the flow stabilizer stubs on the head below the weld and the transition area between the shell and lower head. The full node examination yielded an average coverage of 95% in the axial direction.

The partial aggregate coverage from the area examined between the lugs is 74.2%. The actual aggregate coverage is 43.5% and the average aggregate coverage is 41.6%.

Question C

Welds 3RPV-WR13 & 3RPV-WR13A

The RPV Outlet nozzle-to-shell welds were examined to the maximum extent possible. The outlet nozzle-to-shell welds were scanned on the inner shell in two circular directions around the nozzle to detect indications transverse to the weld axis. This circumferential scan is limited due to the nozzle reinforcement on the vessel shell ID near the weld and the vessel transition taper below the weld (See Figure 7). In addition the weld was examined by scanning the nozzle bore and the tapered section of the nozzle bore to detect indications oriented parallel to the weld.

The circumferential scan limits for the transducers on the shell are "Z"=125.70 (nozzle reinforcement limitation) and "Z" =135.90 (nozzle transition taper). This is shown in the vertical section view of Figure 7.

The axial scan limits for the 45° and 0° transducers on the nozzle bore is "R" =34.18 (nozzle bore to taper transition limitation) and "R" =55.19 (45° limit for examination of T/2 area). This is shown in the vertical section view of Figure 7.

The axial scan limits for the 45° and 15° transducers on the nozzle bore taper is "R" =14.00 (limitation from end of taper section nearest the vessel ID surface) and "R" =28.68 (nozzle bore taper to nozzle bore transition). This is shown in the vertical section view of Figure 7.

The examination coverage is shown in the following tables:

The volume examined from the shell:

Angle	Direction	Volume Examined (%)
0° (vertical section)		31.6%
0° (horizontal section)		16%
45° (vertical section)	Parallel to the weld	45.5%
45° (horizontal section)	Parallel to the weld	29.3%
60° (vertical section)	Parallel to the weld	45.5%
60° (horizontal section)	Parallel to the weld	29.3%
70° Near Surface (vertical section)	Parallel to the weld	78.7%
70° Near Surface (horizontal section)	Parallel to the weld	83.2%

The volume examined from the nozzle bore and tapered section:

Angle	Direction	Volume Examined (%)
0°/15°/45° (vertical section)	Perpendicular to the weld	98.3%
0°/15°/45° (horizontal section)	Perpendicular to the weld	82.7%

Actual Aggregate Coverage for the Vertical Section= 55.5%

Actual Aggregate Coverage for the Horizontal Section= 39.8%

Average Coverage = [55.5 + 39.8] / 2 = 47.6%

The 45° axial scan from the nozzle bore was used to increase coverage of the nozzle-to-shell weld region including the 15° and 45° axial scans from the tapered section of the nozzle bore. See Figures 8 and 9 for the scan coverages.

The examination coverages obtained from the vessel shell circumferential scans are shown in Figure 10.

Overview of Outlet Nozzle-to-Shell Welds 3RPV-WR13 & WR13A

The outlet nozzle-to-shell welds were scanned from the vessel shell in two circular directions around the nozzle in the circumferential direction. This circumferential scan is limited due to the nozzle reinforcement on the vessel shell ID near the weld and the vessel transition taper below the weld. These component geometries prevent increased scan coverage by the ARIS transducer head. This results in a lower percentage of coverage from the straight beam (0°) transducer (24%) including the circumferential scan coverage from the 45° and 60° transducers (38%).

This region was also examined by scanning the nozzle bore and the tapered section of the nozzle bore in an axial direction to increase coverage which yielded an average coverage of 98.7%.

The actual average coverage is 47.6%

B&W NUCLEAR TECHNOLOGIES
Special Products & Integrated Services

THIS DRAWING/DOCUMENT IS THE PROPERTY OF **B&W NUCLEAR TECHNOLOGIES** AND IS LOANED UPON CONDITION THAT IT IS NOT TO BE REPRODUCED OR COPIED IN WHOLE OR IN PART, OR USED FOR FURNISHING INFORMATION TO OTHERS, OR FOR ANY OTHER PURPOSE DETRIMENTAL TO THE INTEREST OF **B&W NUCLEAR TECHNOLOGIES** AND WILL BE RETURNED UPON REQUEST. DO NOT SCALE - USE DIMENSIONS ONLY

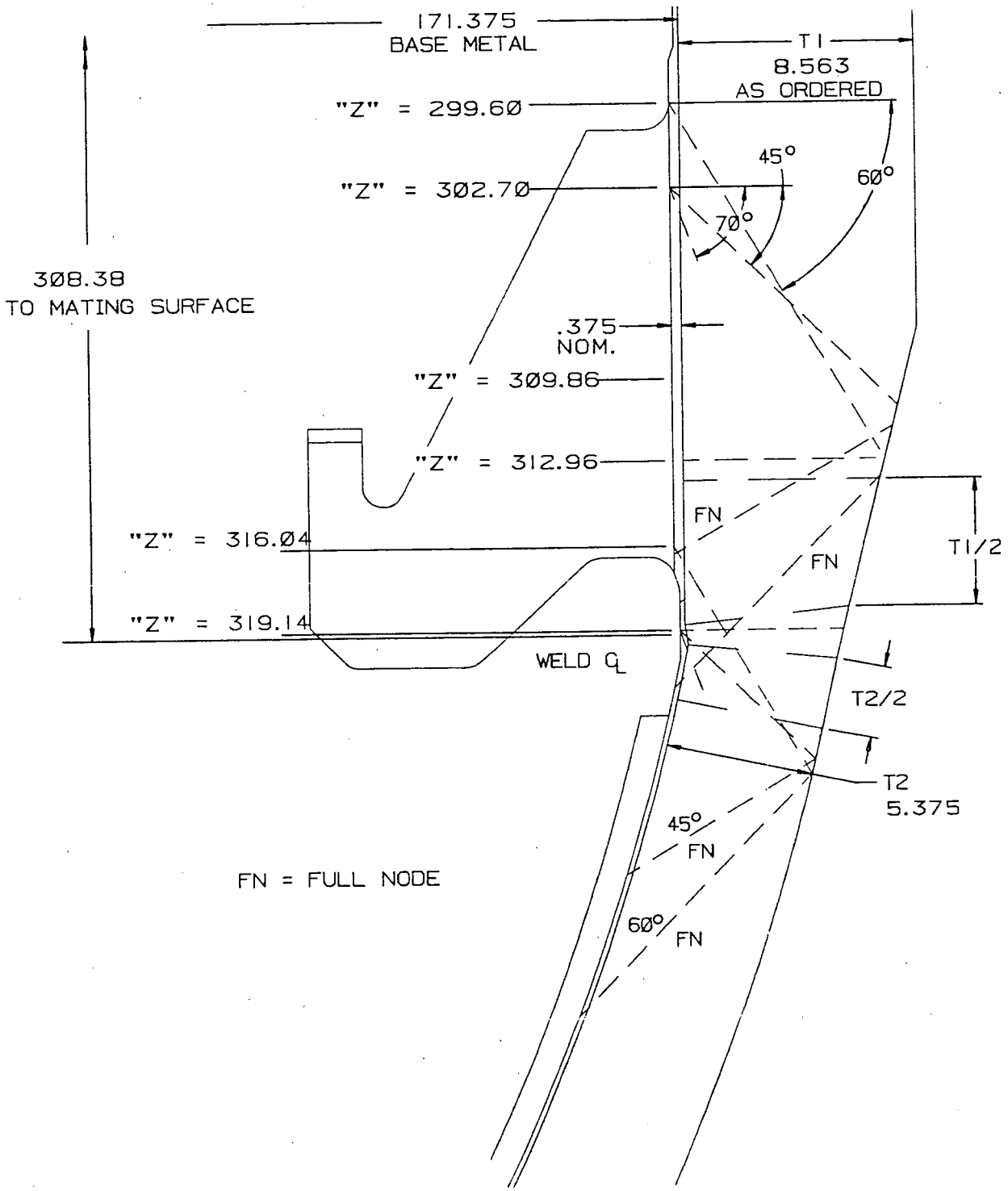

February 17, 1995	45, 60 and 70 Degree Full Node Examination for WR-34 Weld	Figure 1

B&W NUCLEAR TECHNOLOGIES
Special Products & Integrated Services

THIS DRAWING/DOCUMENT IS THE PROPERTY OF **B&W NUCLEAR TECHNOLOGIES** AND IS LOANED UPON CONDITION THAT IT IS NOT TO BE REPRODUCED OR COPIED IN WHOLE OR IN PART, OR USED FOR FURNISHING INFORMATION TO OTHERS, OR FOR ANY OTHER PURPOSE DETRIMENTAL TO THE INTEREST OF **B&W NUCLEAR TECHNOLOGIES** AND WILL BE RETURNED UPON REQUEST. DO NOT SCALE – USE DIMENSIONS ONLY.

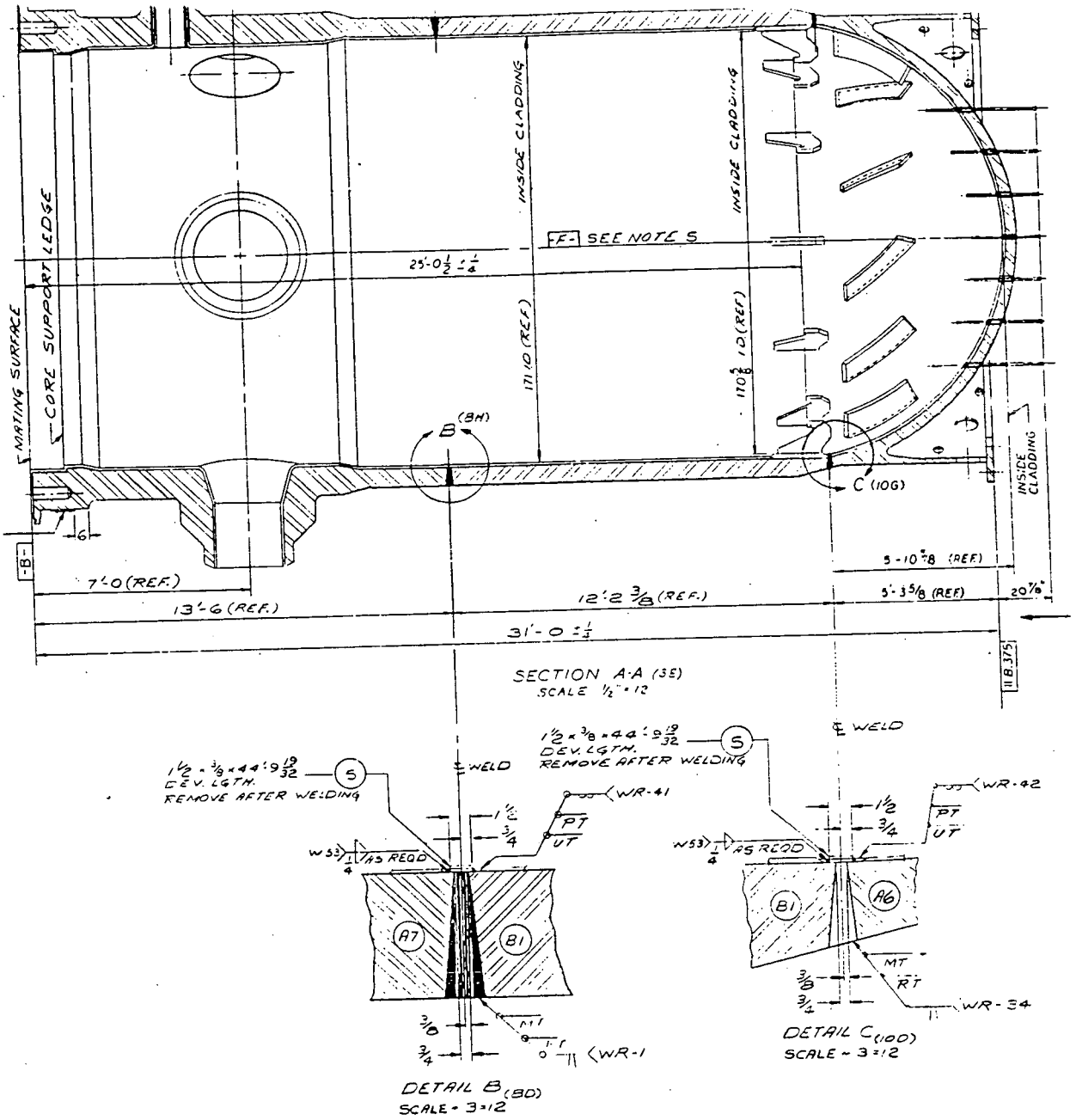

February 17, 1995	Core Guide Lug & Flow Stabilizer Drawing Showing WR-34 Weld	Figure 2A

B&W NUCLEAR TECHNOLOGIES
Special Products & Integrated Services

THIS DRAWING/DOCUMENT IS THE PROPERTY OF B&W NUCLEAR TECHNOLOGIES AND IS LOANED UPON CONDITION THAT IT IS NOT TO BE REPRODUCED OR COPIED IN WHOLE OR IN PART, OR USED FOR FURNISHING INFORMATION TO OTHERS, OR FOR ANY OTHER PURPOSE OR MATERIAL TO THE BELIEF OF B&W NUCLEAR TECHNOLOGIES AND WILL BE RETURNED UPON REQUEST. DO NOT SCALE - USE DIMENSIONS ONLY

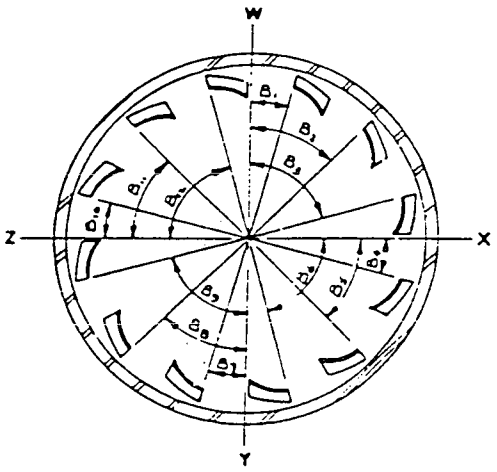

FLOW STABILIZER ORIENTATION

Loc	Dwg
B-1	15°
B-2	45°
B-3	75°
B-4	15°
B-5	45°
B-6	75°
B-7	15°
B-8	45°
B-9	75°
B-10	15°
B-11	45°
B-12	75°

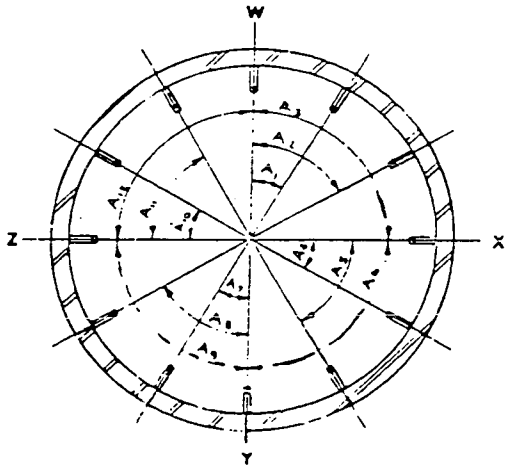

CORE GUIDE LUG ORIENTATION

	Loc	Dwg
W	A-1	30°
W_1	A-2	60°
X	A-3	90°
X_1	A-4	30°
X_2	A-5	60°
Y	A-6	90°
Y_1	A-7	30°
Y_2	A-8	60°
Z	A-9	90°
Z_1	A-10	30°
Z_2	A-11	60°
W	A-12	90°

February 17, 1995	Flow Stabilizer & Core Guide Lug Orientation Drawing	Figure 2B

B&W NUCLEAR TECHNOLOGIES
Special Products & Integrated Services

THIS DRAWING/DOCUMENT IS THE PROPERTY OF **B&W NUCLEAR TECHNOLOGIES** AND IS LOANED UPON CONDITION THAT IT IS NOT TO BE REPRODUCED OR COPIED IN WHOLE OR IN PART, OR USED FOR FURNISHING INFORMATION TO OTHERS, OR FOR ANY OTHER PURPOSE DETRIMENTAL TO THE INTEREST OF **B&W NUCLEAR TECHNOLOGIES** AND WILL BE RETURNED UPON REQUEST. DO NOT SCALE. USE DIMENSIONS ONLY.

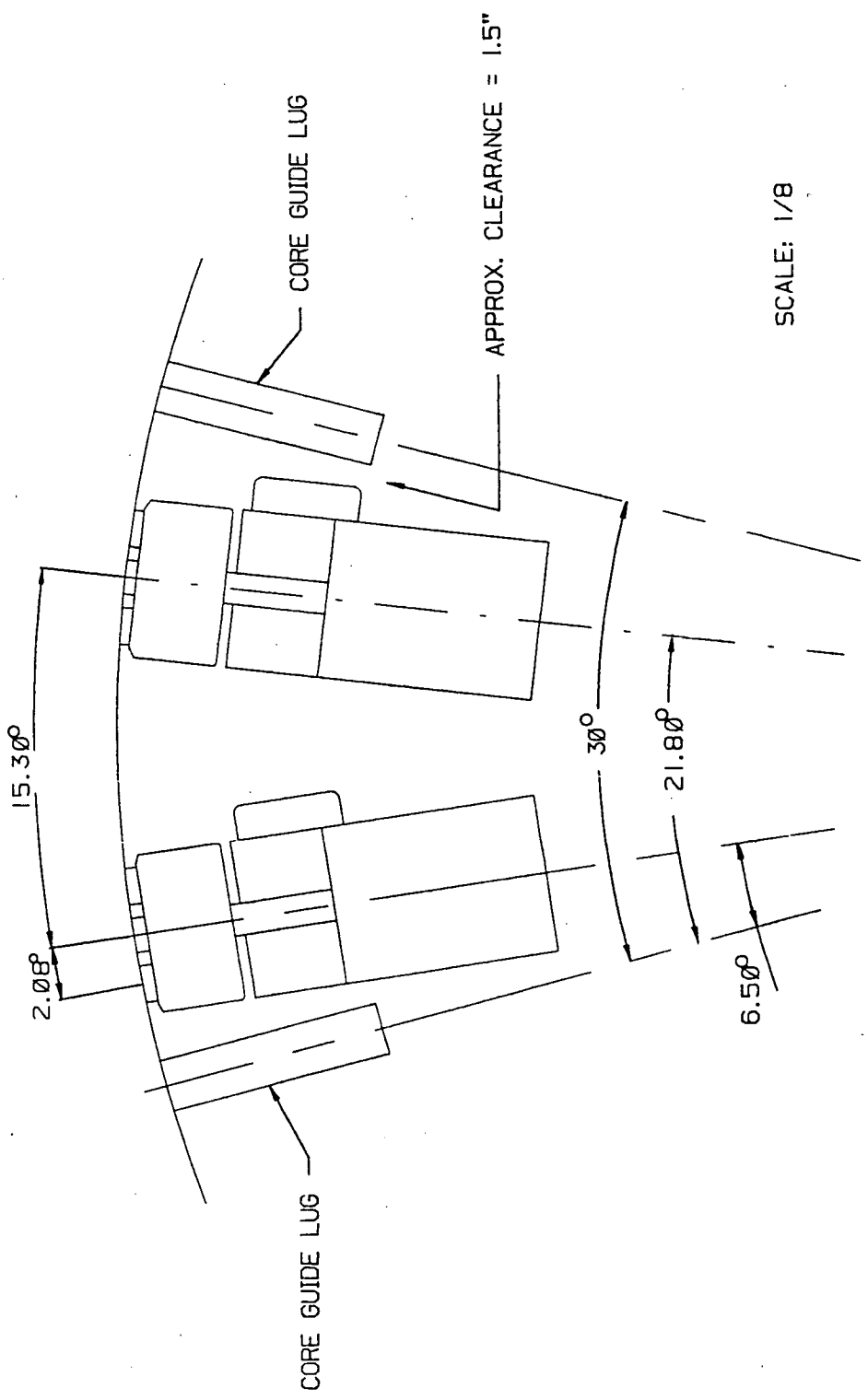

Scanning Interference with ARIS UT Tool showing scan Limitations and scan regions between lugs

February 17, 1995	ARIS Tool Head Showing Core Guide Lug Interference	Figure 3

B&W NUCLEAR TECHNOLOGIES
Special Products & Integrated Services

THIS DRAWING/DOCUMENT IS THE PROPERTY OF **B&W NUCLEAR TECHNOLOGIES** AND IS LOANED UPON CONDITION THAT IT IS NOT TO BE REPRODUCED OR COPIED IN WHOLE OR IN PART, OR USED FOR FURNISHING INFORMATION TO OTHERS, OR FOR ANY OTHER PURPOSE DETRIMENTAL TO THE INTEREST OF **B&W NUCLEAR TECHNOLOGIES** AND WILL BE RETURNED UPON REQUEST. DO NOT SCALE. - USE DIMENSIONS ONLY.

VIEW OF CONTACT HEAD ON THE SCAN SURFACE LOOKING FROM BACK OF HEAD

GAMMA = Ø DEGREES (CLOCKWISE +)

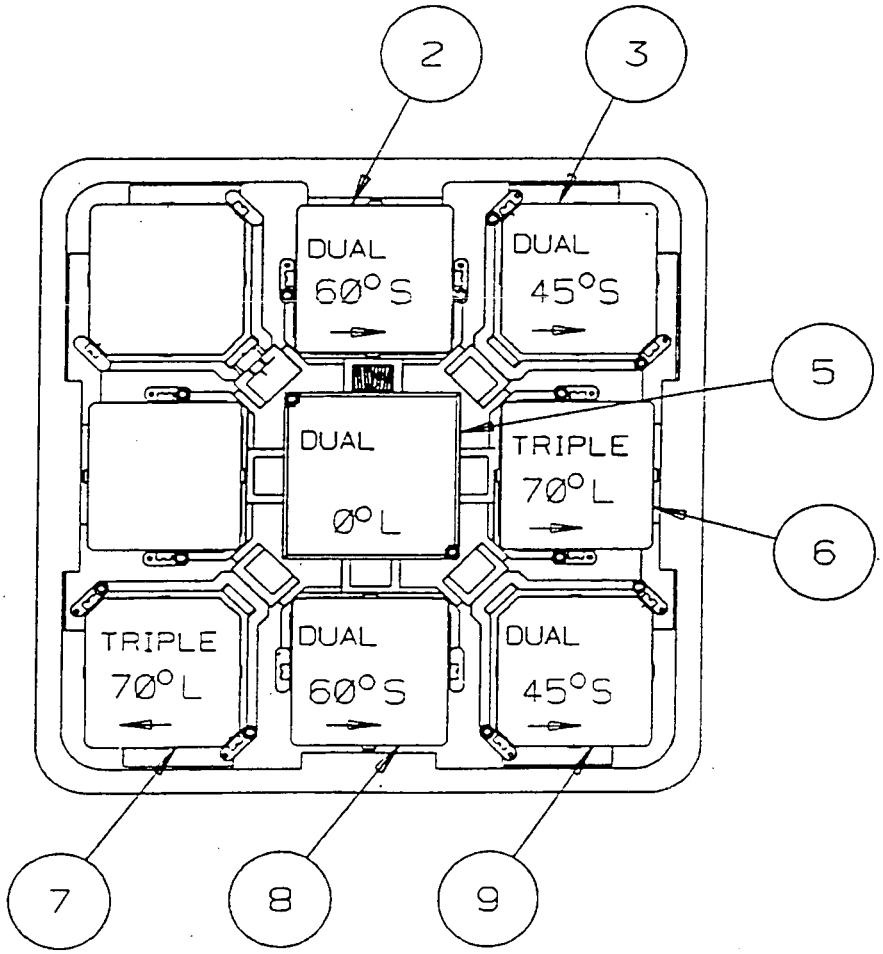

ALTERNATE HEAD

February 17, 1995	Configuration of ARIS UT Tool Alternate Head Design	Figure 4

B&W NUCLEAR TECHNOLOGIES
Special Products & Integrated Services

THIS DRAWING/DOCUMENT IS THE PROPERTY OF **B&W NUCLEAR TECHNOLOGIES** AND IS LOANED UPON CONDITION THAT IT IS NOT TO BE REPRODUCED OR COPIED IN WHOLE OR IN PART, OR USED FOR FURNISHING INFORMATION TO OTHERS, OR FOR ANY OTHER PURPOSE DETRIMENTAL TO THE INTEREST OF **B&W NUCLEAR TECHNOLOGIES** AND WILL BE RETURNED UPON REQUEST. DO NOT SCALE – USE DIMENSIONS ONLY.

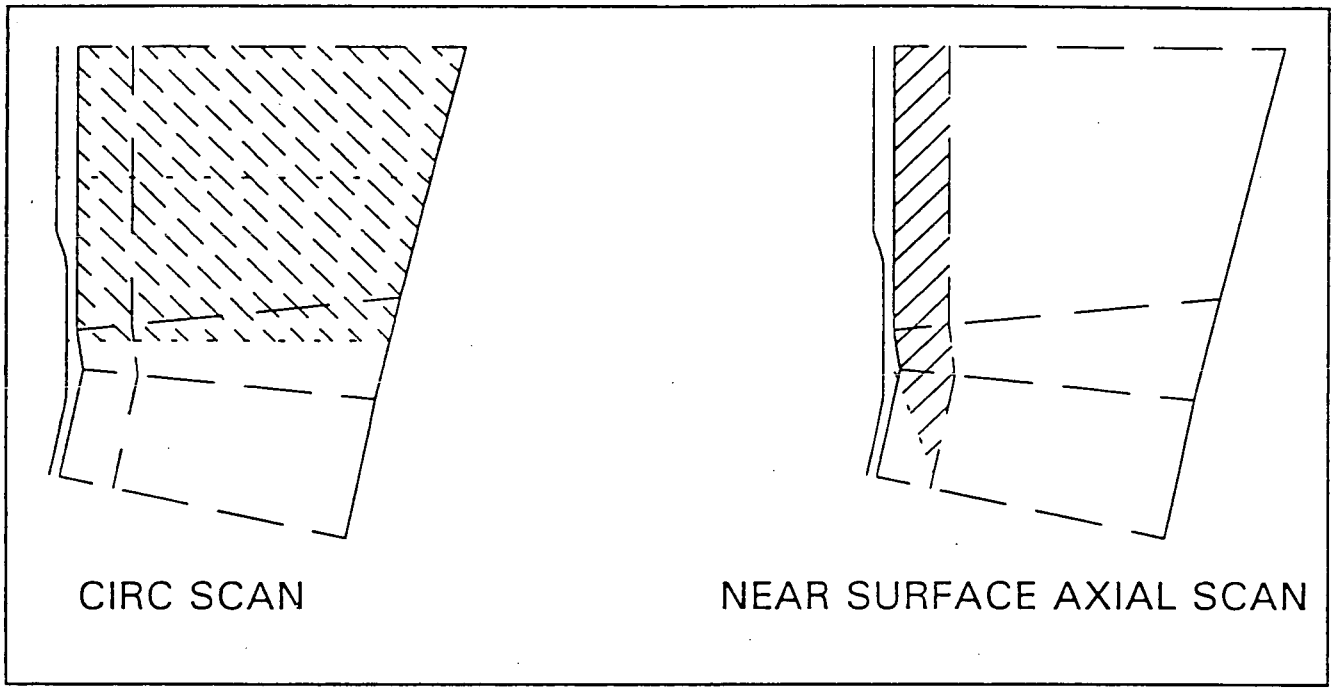

LOWER HEAD TO SHELL WELD SCAN COVERAGES FOR WR-34

February 17, 1995	Circ Scan & Near Surface Axial Scan Coverage between Lugs	Figure 5

B&W NUCLEAR TECHNOLOGIES
Special Products & Integrated Services

THIS DRAWING/DOCUMENT IS THE PROPERTY OF **B&W NUCLEAR TECHNOLOGIES** AND IS LOANED UPON CONDITION THAT IT IS NOT TO BE REPRODUCED OR COPIED IN WHOLE OR IN PART, OR USED FOR FURNISHING INFORMATION TO OTHERS, OR FOR ANY OTHER PURPOSE DETRIMENTAL TO THE INTEREST OF **B&W NUCLEAR TECHNOLOGIES** AND WILL BE RETURNED UPON REQUEST. DO NOT SCALE - USE DIMENSIONS ONLY.

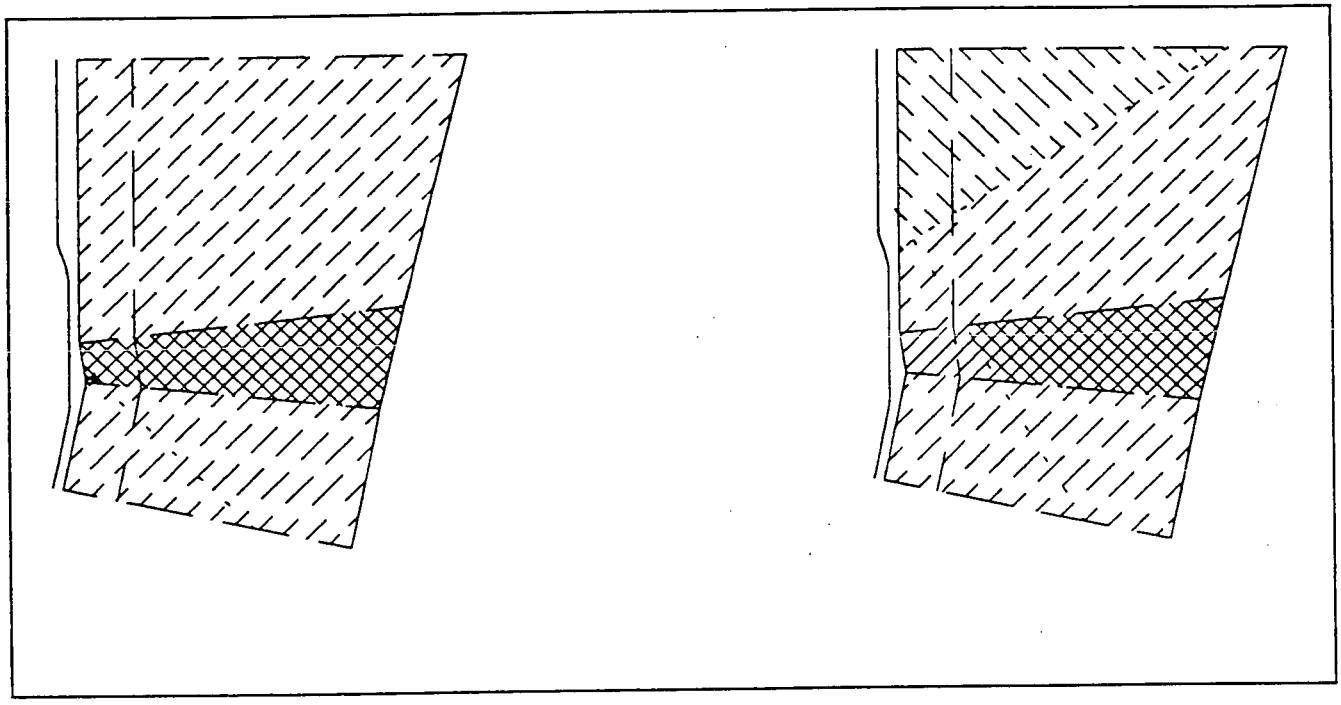

LOWER HEAD TO SHELL WELD AXIAL SCAN

February 17, 1995	45 and 60 degree Full Node Exam Coverage from the Axial Direction	Figure 6

B&W NUCLEAR TECHNOLOGIES
Special Products & Integrated Services

THIS DRAWING/DOCUMENT IS THE PROPERTY OF B&W NUCLEAR TECHNOLOGIES AND IS LOANED UPON CONDITION THAT IT IS NOT TO BE REPRODUCED OR COPIED IN WHOLE OR IN PART, OR USED FOR FURNISHING INFORMATION TO OTHERS, OR FOR ANY OTHER PURPOSE DETRIMENTAL TO THE INTEREST OF B&W NUCLEAR TECHNOLOGIES AND WILL BE RETURNED UPON REQUEST. DO NOT SCALE - USE DIMENSIONS ONLY.

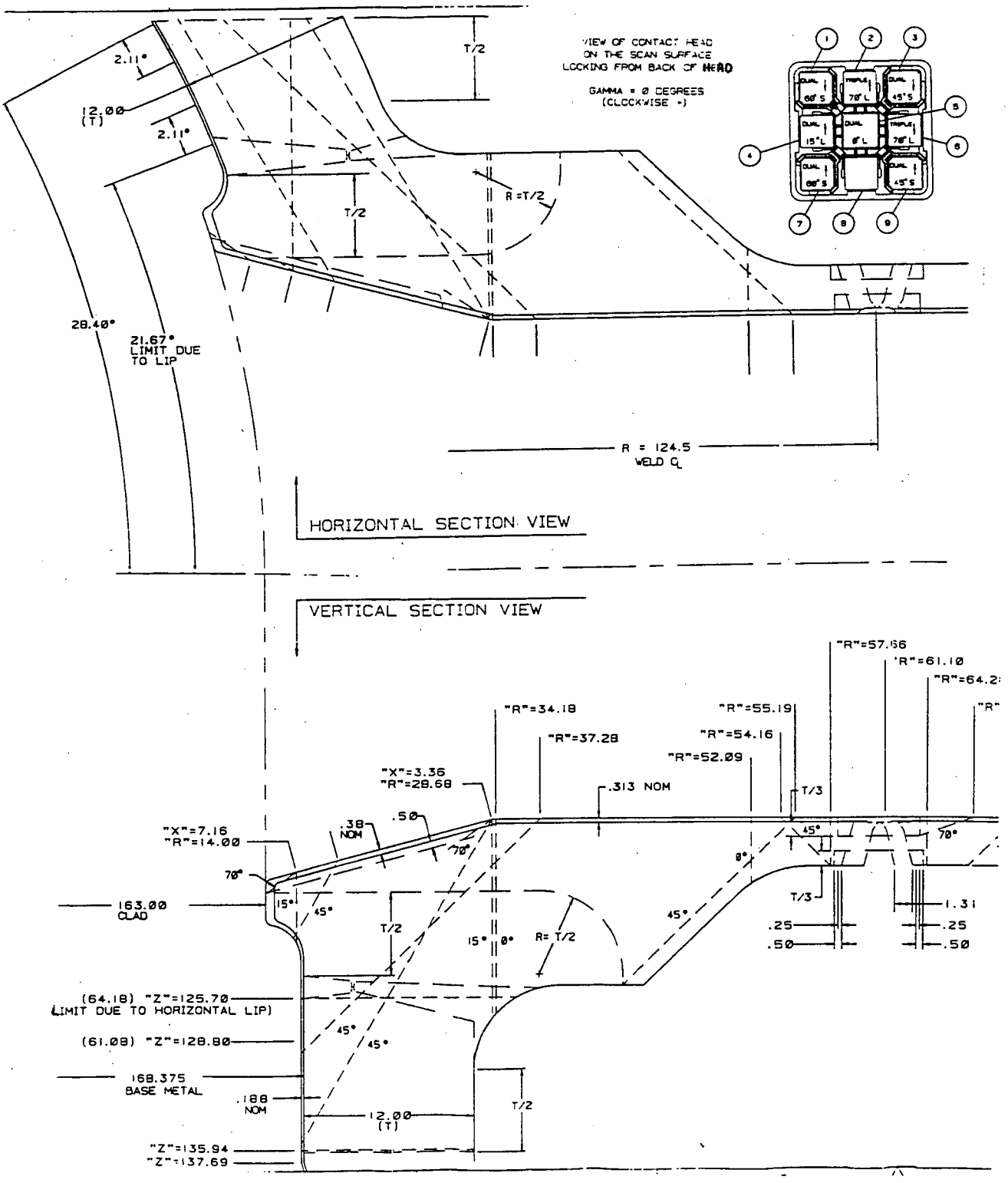

February 17, 1995	Scan Coverage Overview for 3RPV-WR13 & WR13A	Figure 7

B&W NUCLEAR TECHNOLOGIES
Special Products & Integrated Services

THIS DRAWING/DOCUMENT IS THE PROPERTY OF **B&W NUCLEAR TECHNOLOGIES** AND IS LOANED UPON CONDITION THAT IT IS NOT TO BE REPRODUCED OR COPIED IN WHOLE OR IN PART, OR USED FOR FURNISHING INFORMATION TO OTHERS, OR FOR ANY OTHER PURPOSE DETRIMENTAL TO THE INTEREST OF **B&W NUCLEAR TECHNOLOGIES** AND WILL BE RETURNED UPON REQUEST. DO NOT SCALE – USE DIMENSIONS ONLY.

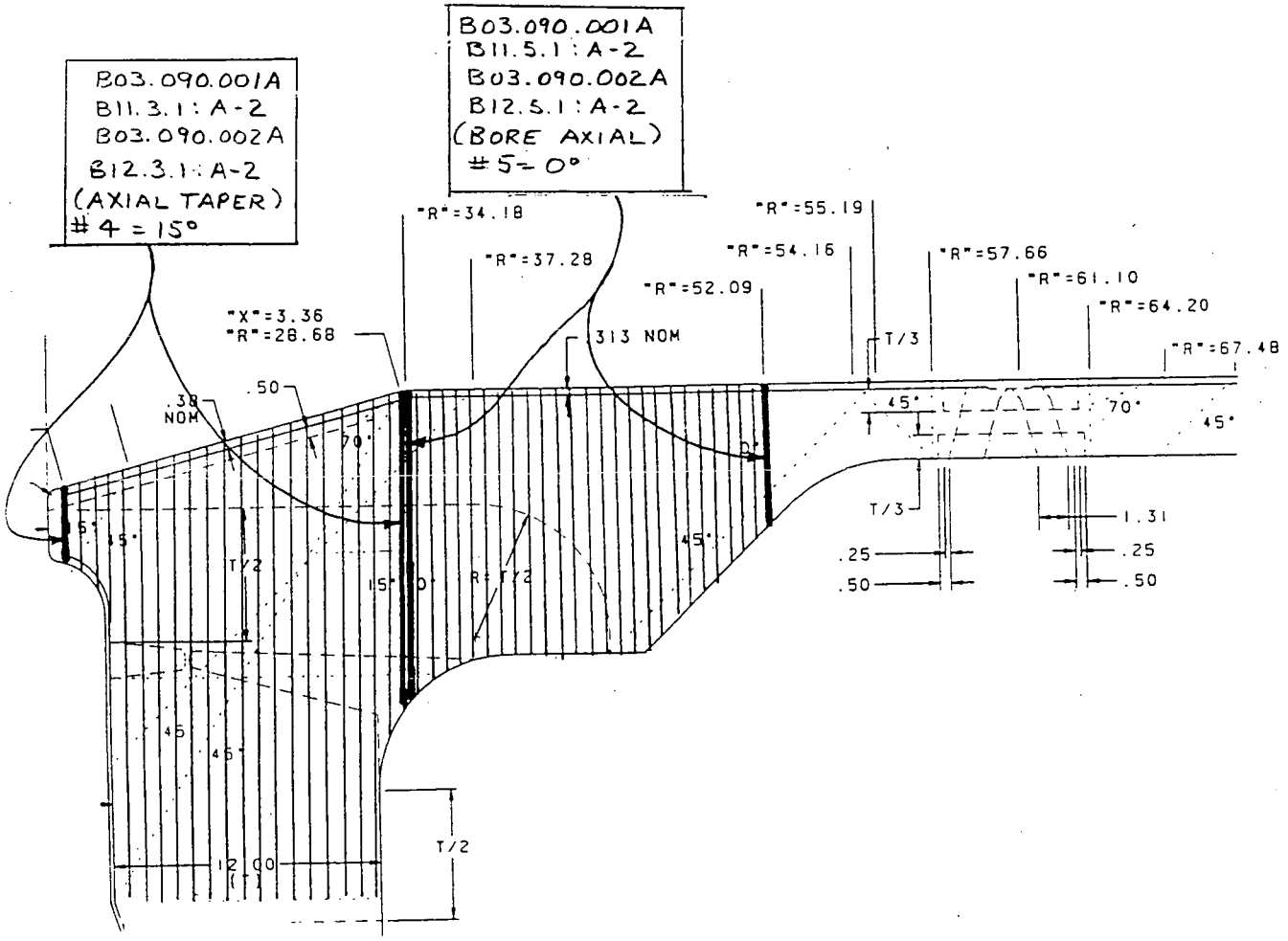

February 17, 1995	0 and 15 degree Axial Scans from the nozzle bore and taper regions	Figure 8

B&W NUCLEAR TECHNOLOGIES
Special Products & Integrated Services

THIS DRAWING/DOCUMENT IS THE PROPERTY OF **B&W NUCLEAR TECHNOLOGIES** AND IS LOANED UPON CONDITION THAT IT IS NOT TO BE REPRODUCED OR COPIED IN WHOLE OR IN PART, OR USED FOR FURNISHING INFORMATION TO OTHERS, OR FOR ANY OTHER PURPOSE DETRIMENTAL TO THE INTEREST OF **B&W NUCLEAR TECHNOLOGIES** AND WILL BE RETURNED UPON REQUEST. DO NOT SCALE - USE DIMENSIONS ONLY.

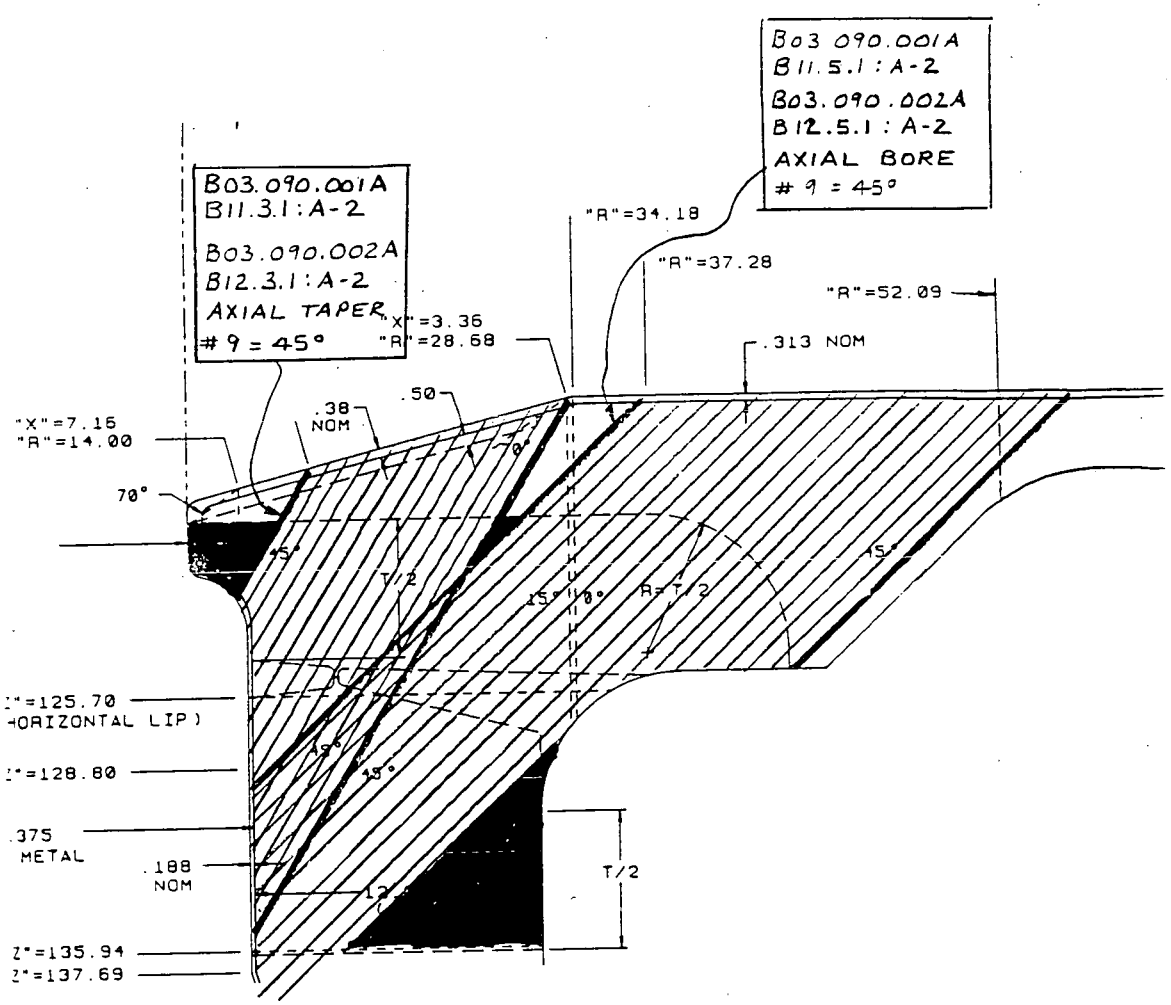

February 17, 1995	45 degree Axial Scan Coverage from the nozzle bore & taper	Figure 9

B&W NUCLEAR TECHNOLOGIES
Special Products & Integrated Services

THIS DRAWING/DOCUMENT IS THE PROPERTY OF **B&W NUCLEAR TECHNOLOGIES** AND IS LOANED UPON CONDITION THAT IT IS NOT TO BE REPRODUCED OR COPIED IN WHOLE OR IN PART, OR USED FOR FURNISHING INFORMATION TO OTHERS, OR FOR ANY OTHER PURPOSE DETRIMENTAL TO THE INTEREST OF **B&W NUCLEAR TECHNOLOGIES** AND WILL BE RETURNED UPON REQUEST. DO NOT SCALE - USE DIMENSIONS ONLY.

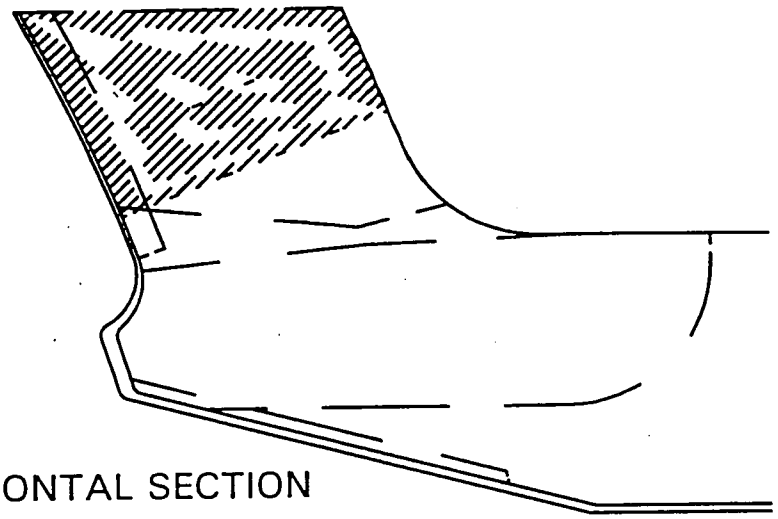

HORIZONTAL SECTION

VERTICAL SECTION

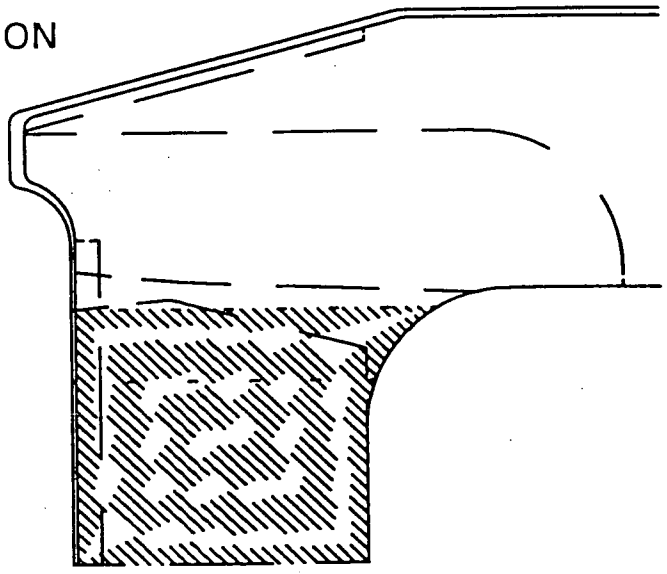

February 17, 1995	Outlet Nozzle to Shell Circ Scan from the vessel shell ID	Figure 10

DUKE RESPONSE TO QUESTION D

RESPONSE TO ITEM D

The following information is being submitted for weld ID nos. 3SGA-WG-25 and 3SGB-WG25. These welds are nozzle inner radius items. Coverage on both was 74%. Limitations are caused by the ratio of the nozzle OD to the vessel wall thickness. When the nozzle OD is small in relation to the vessel thickness, more coverage can be obtained when scanning from the vessel side.

Nozzle inner radius sections are examined with UT to the maximum extent practical from the vessel side. Calibration blocks and procedures were in accordance with ASME Section XI and Section V, Article 4, 1980 Edition with Winter 1980 Addenda.

Duke Power Company is investigating examination from the nozzle barrel with compound angles. Use of computer modeling is being considered to calculate angles, skew and beam paths to be used.