Charles R. Pierce
Regulatory Affairs Director

Southern Nuclear
Operating Company, Inc.
40 Inverness Center Parkway
Post Office Box 1295
Birmingham, AL 35242

Tel 205.992.7872
Fax 205.992.7601

SOUTHERN NUCLEAR
A SOUTHERN COMPANY

APR 27 2016

Docket Nos.: 50-321 50-348 50-424
50-366 50-364 50-425

NL-16-0644

U. S. Nuclear Regulatory Commission
ATTN: Document Control Desk
Washington, D. C. 20555-0001

Edwin I. Hatch Nuclear Plant Units 1&2;
Joseph M. Farley Nuclear Plant Units 1&2;
Vogtle Electric Generating Plant Units 1&2
Annual Radioactive Effluent Release Reports and Offsite Dose Calculation Manual for 2015

Ladies and Gentlemen:

In accordance with section 5.6.3 of the referenced plants' Technical Specifications, Southern Nuclear Operating Company hereby submits the Annual Radioactive Effluent Release Reports for 2015. The Annual Radioactive Effluent Release Report for the Joseph M. Farley Nuclear Plant Units 1&2, Edwin I. Hatch Nuclear Plant Units 1&2, and the Vogtle Electric Generating Plant Units 1&2 are provided in Enclosures 1, 2, and 3, respectively.

Technical Specification 5.5.1.c for each plant requires that the Offsite Dose Calculation Manual (ODCM) be provided as part of, or concurrent with, the Radioactive Effluent Release Report for the period of the report in which any change in the ODCM was made. During the reporting period for the Annual Radioactive Effluent Release Report for 2015, there was one ODCM revision at Vogtle Electric Generating Plant Units 1&2. Changes to the Process Control Program (PCP), if any, are described in Section 9.2 of the corresponding Annual Radioactive Effluent Release Report for each site.

This letter contains no NRC commitments. If you have any questions, please contact Ken McElroy at (205) 992-7369.

Respectfully submitted,

C. R. Pierce

C. R. Pierce
Regulatory Affairs Director

CRP/KGL

IE48
NRR

Enclosures:

1. Edwin I. Hatch Nuclear Plant Units 1&2 Annual Radioactive Effluent Release Report for 2015
2. Joseph M. Farley Nuclear Plant Units 1&2 Annual Radioactive Effluent Release Report for 2015
3. Annual Radioactive Effluent Release Report for 2015
4. Vogtle Electric Generating Plant Units 1&2 Offsite Dose Calculation Manual – Version 31

cc: Southern Nuclear Operating Company
Mr. S. E. Kuczynski, Chairman, President & CEO
Mr. D. G. Bost, Executive Vice President & Chief Nuclear Officer
Ms. C. A. Gayheart, Vice President – Farley
Mr. D. R. Vineyard, Vice President – Hatch
Mr. D. R. Madison, Vice President – Fleet Operations
Mr. M. D. Meier, Vice President – Regulatory Affairs
Mr. B. K. Taber, Vice President – Vogtle 1 & 2
Mr. B. J. Adams, Vice President – Engineering
Ms. B. L. Taylor, Regulatory Affairs Manager – Farley
Mr. G. L. Johnson, Regulatory Affairs Manager – Hatch
Mr. G. W. Gunn, Regulatory Affairs Manager – Vogtle 1& 2
RType:<Farley=CFA04.054; Hatch=CHA02.004; Vogtle=CVC7000

U. S. Nuclear Regulatory Commission
Ms. C. Haney Regional Administrator
Mr. R. E. Martin, NRR Project Manager – Vogtle 1 & 2
Mr. S. A. Williams, NRR Project Manager - Farley
Mr. M. D. Orenak, NRR Project Manager – Hatch
Mr. D. H. Hardage, Senior Resident Inspector – Hatch
Mr. W. D. Deschaine, Senior Resident Inspector – Vogtle 1 & 2
Mr. P. K. Niebaum, Senior Resident Inspector - Farley

Alabama Department of Public Health
Dr. T. M. Miller, State Health Officer

State of Georgia
Mr. J. H. Turner, Director – Environmental Protection Division

Edwin I. Hatch Nuclear Plant Units 1&2;
Joseph M. Farley Nuclear Plant Units 1&2;
Vogtle Electric Generating Plant Units 1&2
Annual Radioactive Effluent Release Reports and Offsite Dose Calculation Manual for 2015

Enclosure 1

Edwin I. Hatch Nuclear Plant Units 1&2
Annual Radioactive Effluent Release Report for 2015

SOUTHERN COMPANY

E. I. HATCH NUCLEAR PLANT – UNITS 1 AND 2

NRC DOCKET NOS. 50-321 AND 50-366

FACILITY OPERATING LICENSE NOS. DPR-57 AND NPF-5

ANNUAL RADIOACTIVE EFFLUENT RELEASE REPORT

FOR

JANUARY 1, 2015 TO DECEMBER 31, 2015

Prepared by: Daniel B. Carter

Reviewed by: Bill Durell

ACKNOWLEDGEMENT OF OWNERSHIP

The contents of this Annual Radioactive Effluent Release Report, contained herein, are true and accurate to the best of my knowledge. I understand that I am ultimately responsible for the information that has been captured within these pages.

Bill Durell Bill Durell

Chemistry Manager

SOUTHERN COMPANY

E. I. HATCH NUCLEAR PLANT

UNITS NO. 1 & 2

ANNUAL REPORT

PLANT RADIOACTIVE EFFLUENT RELEASES

JANUARY 1, 2015 THROUGH DECEMBER 31, 2015

SECTION	TITLE	PAGE
1.0	Liquid Effluents	1
1.1	Regulatory Requirements	1
1.1.1	Concentration Limits	1
1.1.2	Dose Limits	1
1.2	Effluent Concentration Limit	1
1.3	Measurements and Approximations of Total Radioactivity for Liquid Radwaste	2
1.3.1	Total Radioactivity Determination for Liquid Radwaste	2
1.4	Measurements and Approximations of Total Radioactivity for Groundwater Outfalls – Y22N003A/12B and Y22N008A	4
1.4.1	Total Radioactivity Determination for Groundwater Outfalls	4
1.5	Total Error Estimation	5
1.6	Liquid Effluent Release Data	6
1.7	Radiological Impact Due to Liquid Releases	7
1.8	Liquid Effluents - Batch Releases	7
1.9	Liquid Effluents - Continuous Releases	7

SECTION	TITLE	PAGE
1.10	Liquid Effluents - Abnormal Releases	7
2.0	Gaseous Effluents	28
2.1	Regulatory Requirements	28
2.1.1	Dose Rate Limits	28
2.1.2	Air Doses Due to Noble Gases in Gaseous Releases	28
2.1.3	Doses to a Member of the Public	28
2.2	Measurements and Approximations of Total Radioactivity	29
2.2.1	Sample Collection and Analysis	29
2.2.2	Total Quantities of Radioactivity, Dose Rates and Cumulative Doses	30
2.2.2.1	Fission and Activation Gases	30
2.2.2.2	Radioiodine, Tritium and Particulate Releases	30
2.2.2.3	Gross Alpha Release	31
2.2.3	Total Error Estimation	31
2.3	Gaseous Effluent Release Data	33
2.4	Radiological Impact Due to Gaseous Releases	34
2.5	Gaseous Effluents - Batch Releases	34
2.6	Gaseous Effluents - Abnormal Releases	34
3.0	Solid Waste	63
3.1	Regulatory Requirements	63
3.1.1	Solid Radioactive Waste System	63
3.1.2	Reporting Requirements	63

SECTION	TITLE	PAGE
3.2	Solid Waste Data	64
4.0	Doses to Members of the Public Inside The Site Boundary	69
4.1	Regulatory Requirements	69
4.2	Demonstration of Compliance	69
5.0	Total Dose from Uranium Fuel Cycle (40 CFR 190)	74
5.1	Regulatory Requirements	74
5.2	Demonstration of Compliance	74
6.0	Meteorological Data	75
7.0	Program Deviations	76
7.1	Inoperable Liquid or Gaseous Effluent Monitoring Instrumentation	76
7.1.1	Regulatory Requirements	76
7.1.2	Description of Deviations	76
7.2	Tanks Exceeding Curie Content Limits	76
7.2.1	Regulatory Requirements	76
7.2.2	Description of Deviations	76
7.3	Effluent Sample Analysis Exceeding Minimum Detectable Concentration (MDC)	76
7.3.1	Regulatory Requirement	76
7.3.2	Description of Deviation	76

SECTION	TITLE	PAGE
8.0	Changes to the Plant Hatch Offsite Dose Calculation Manual (ODCM)	77
8.1	Regulatory Requirements	77
8.2	Description of Changes	77
9.0	Major Changes to the Liquid, Gaseous or Solid Radwaste Treatment Systems	78
9.1	Regulatory Requirements	78
9.2	Description of Major Changes	78

SOUTHERN COMPANY

E. I. HATCH NUCLEAR PLANT

UNITS NO. 1 & 2

ANNUAL REPORT

PLANT RADIOACTIVE EFFLUENT RELEASES

TABLE	LIST OF TABLES	PAGE
1-1A	Liquid Effluents - Summation of All Releases Unit 1 (Quarters 1, 2, 3 and 4)	8
1-1B	Liquid Effluents - Summation of All Releases Unit 2 (Quarters 1, 2, 3 and 4)	9
1-1C	Liquid Effluents - Summation of All Releases Site (Quarters 1, 2, 3 and 4)	10
1-2A	Liquid Effluents - Unit 1 (Quarters 1, 2, 3 and 4)	11
1-2B	Liquid Effluents - Unit 2 (Quarters 1, 2, 3 and 4)	14
1-2C	Liquid Effluents - Site (Quarters 1, 2, 3 and 4)	17
1-3A	Doses to a Member of The Public Due to Liquid Releases Unit 1 (Quarters 1, 2, 3 and 4)	20
1-3B	Doses to a Member of The Public Due to Liquid Releases Unit 2 (Quarters 1, 2, 3 and 4)	21
1-4	Minimum Detectable Concentration - Liquid Sample Analysis	22
1-5A	Liquid Effluents - Batch Release Summary Unit 1	23
1-5B	Liquid Effluents - Batch Release Summary Unit 2	24

TABLE	LIST OF TABLES	PAGE

1-6A	Liquid Effluents - Abnormal Release Summary Unit 1	25
1-6B	Liquid Effluents - Abnormal Release Summary Unit 2	26
1-6C	Liquid Effluents - Abnormal Release Summary Site	27
2-1A	Gaseous Effluents - Summation of All Releases - Unit 1 (Quarters 1, 2, 3 and 4)	35
2-1B	Gaseous Effluents - Summation of All Releases - Unit 2 (Quarters 1, 2, 3 and 4)	36
2-1C	Gaseous Effluents - Summation of All Releases - Site (Quarters 1, 2, 3 and 4)	37
2-2A	Gaseous Effluents - Elevated Releases Unit 1 (Quarters 1, 2, 3 and 4)	38
2-2B	Gaseous Effluents - Elevated Releases Unit 2 (Quarters 1, 2, 3 and 4)	41
2-2C	Gaseous Effluents - Elevated Releases Site (Quarters 1, 2, 3 and 4)	44
2-3A	Gaseous Effluents - Ground Level Releases Unit 1 (Quarters 1, 2, 3 and 4)	47
2-3B	Gaseous Effluents - Ground Level Releases Unit 2 (Quarters 1, 2, 3 and 4)	49
2-3C	Gaseous Effluents - Ground Level Releases Site (Quarters 1, 2, 3 and 4)	51
2-4A	Air Doses Due to Noble Gases in Gaseous Releases - Unit 1 (Quarters 1, 2, 3 and 4)	53

TABLE	LIST OF TABLES	PAGE
2-4B	Air Doses Due to Noble Gases in Gaseous Releases - Unit 2 (Quarters 1, 2, 3 and 4)	54
2-5A	Doses to a Member of the Public Due to Radioiodine, Tritium, and Particulates in Gaseous Releases - Unit 1 (Quarters 1, 2, 3 and 4)	55
2-5B	Doses to a Member of the Public Due to Radioiodine, Tritium, and Particulates in Gaseous Releases - Unit 2 (Quarters 1, 2, 3 and 4)	56
2-6	Minimum Detectable Concentration - Gaseous Sample Analyses	57
2-7A	Gaseous Effluents - Batch Release Summary Unit 1	58
2-7B	Gaseous Effluents - Batch Release Summary Unit 2	59
2-8A	Gaseous Effluents - Abnormal Release Summary Unit 1	60
2-8B	Gaseous Effluents - Abnormal Release Summary Unit 2	61
2-8C	Gaseous Effluents - Abnormal Release Summary Site	62
3-1	Solid Waste and Irradiated Fuel Shipments	65
4-1	Doses to a Member of the Public Due to Activities Inside The Site Boundary	70

ATTACHMENT	TITLE	PAGE
APPENDIX A	Carbon-14	79
APPENDIX B	Summary of Groundwater Protection Program	81

1.0 *Liquid Effluents*

1.1 *Regulatory Requirements*

1.1.1 *Concentration Limits*

The concentration of radioactive material released in liquid effluents to UNRESTRICTED AREAS shall be limited to ten times the concentrations specified in 10 CFR Part 20, Appendix B, Table 2, Column 2, for radionuclides other than dissolved or entrained noble gases. For dissolved or entrained noble gases, the concentration shall be limited to 1.0E-04 microcuries/ml total activity.

1.1.2 *Dose Limits*

The dose or dose commitment, to a MEMBER OF THE PUBLIC from radioactive materials in liquid effluents released from each unit to UNRESTRICTED AREAS, shall be limited:

a. During any calendar quarter, to less than or equal to 1.5 mrems to the whole body and to less than or equal to 5 mrems to any organ, and

b. During any calendar year, to less than or equal to 3 mrems to the whole body and to less than or equal to 10 mrems to any organ.

1.2 *Effluent Concentration Limit*

ECL values used in determining allowable liquid radwaste release rates and concentrations, for principal gamma emitters, I-131, tritium, Sr-89, Sr-90 and Fe-55, are taken from 10 CFR Part 20, Appendix B, Table 2, Column 2.
A tolerance factor of up to 10 is utilized to allow flexibility in establishing practical monitor set points which can accommodate effluent releases at concentrations higher than the ECL values stated in 10 CFR 20, Appendix B, Table 2, Column 2.

For dissolved or entrained noble gases in liquid radwaste, the ECL is 1.0E-04 uCi/ml total activity.

For gross alpha in liquid radwaste, the ECL is 2E-09 uCi/ml.

Furthermore, for all the above radionuclides, or categories of radioactivity, the overall ECL fraction is determined in accordance with 10 CFR Part 20, Appendix B.

The method utilizing the ECL fraction to determine liquid radwaste release rates and effluent radiation monitor set points is described in Subsection 1.3 of this report.

The method utilizing the ECL fraction to determine the dose released from groundwater outfalls is described in Subsection 1.4 of this report.

1.3 Measurements and Approximations of Total Radioactivity for Liquid Radwaste

Prior to the release of any tank containing liquid radwaste, following the required recirculations, samples are collected and analyzed in accordance with the Edwin I. Hatch Nuclear Plant Offsite Dose Calculation Manual (ODCM) Table 2-3. A sample from each tank planned for release is analyzed for principal gamma emitters, I-131, and dissolved and entrained noble gases, by gamma spectroscopy. Monthly and quarterly composites are prepared for analysis by extracting aliquots from each sample taken from the tanks released.
Liquid radwaste sample analyses are performed as described in Section 1.3.1.

1.3.1 Total Radioactivity Determination for Liquid Radwaste

MEASUREMENT	FREQUENCY	METHOD
1. Gamma Isotopic	Each Batch	Gamma Spectroscopy with computerized data reduction
2. Dissolved or entrained noble gas	Each Batch	Gamma Spectroscopy with computerized data reduction
3. Tritium	Monthly Composite	Distillation and liquid scintillation counting
4. Gross alpha	Monthly Composite	Gas flow proportional counting
5. Sr-89 & 90	Quarterly Composite	Chemical separation and gas flow proportional counting
6. Fe-55	Quarterly Composite	Chemical separation and liquid scintillation counting

Gamma isotopic measurements are performed in-house using germanium detectors with a resolution of 2.0 keV or lower. The detectors are shielded by four inches of lead. A liquid radwaste sample is typically counted for 2000 seconds and a peak search of the resulting gamma ray spectrum is performed. Energy and net count data for all significant peaks are determined and a quantitative reduction or MDC calculation is performed to ensure that the MDC's are met for the nuclides specified in the ODCM Chapter 10 (i.e., Mn-54, Fe-59, Co-58, Co-60, Zn-65, Mo-99, Cs-134, Cs-137, Ce-141 and Ce-144). The quantitative calculations, corrections for counting time, decay time, sample volume, sample geometry, detector efficiency, baseline counts, branching ratio and MDC calculations, are made based on the counts at the location in the spectrum where the peak for that radionuclide would be located, if present. Typically achieved liquid effluent sample analyses minimum detectable concentrations are reported in Table 1-4. Tritium, Gross Alpha, Sr-89, Sr-90 and Fe-55 are, in some cases, analyzed offsite. The radionuclide concentrations determined by gamma spectroscopic analysis of samples taken from tanks planned for release, in addition to the most current sample analysis results available for tritium, gross alpha, Sr-89, Sr-90 and Fe-55, are used along with the corresponding ECL values to determine the ECL fraction for these tanks. This ECL fraction is then used, with the appropriate safety factors, tolerance factors, and the expected dilution stream flow to calculate maximum permissible release rate and a liquid effluent monitor setpoint. The monitor setpoint is calculated to assure that the limits of the ODCM are not exceeded.

A monitor reading in excess of the calculated setpoint will result in an automatic termination of the liquid radwaste discharge. Liquid effluent discharge is also automatically terminated if the dilution stream flow rate falls below the minimum assured dilution flow rate used in the setpoint calculations and established as a setpoint on the dilution stream flow monitor.

Radionuclide concentrations, safety factors, dilution stream flow rate, and the liquid effluent radiation monitor calibration factor, are entered into the computer and a pre-release printout is generated. If the release is not permissible, appropriate warnings will be displayed on the computer screen. If the release is permissible, it is approved by an independent qualified technicican. The pertinent information is transferred manually from the prerelease printout to a one-page release permit, which is forwarded to Radwaste Operations. When the release is completed, the release permit is returned from Radwaste Operations to Chemistry with the actual release data provided. These data are input into the computer and a post-release printout is generated. The post release printout contains the actual release rates, the actual release concentrations and quantities, the actual dilution flow, and the calculated doses to a Member of the Public.

1.4 *Measurements and Approximations of Total Radioactivity for Groundwater Outfall – Y22N008A*

Samples are collected and analyzed in accordance with the Edwin I. Hatch Nuclear Plant Offsite Dose Calculation Manual (ODCM) Table 2-3. Weekly, monthly and quarterly composites are prepared for analysis by extracting aliquots from each outfall's automatic sampler, which collects a composite sample over a seven-day period. Sample analyses are performed as described in Section 1.4.1.

1.4.1 *Total Radioactivity Determination for Groundwater Outfalls*

MEASUREMENT	FREQUENCY	METHOD
1. Gamma Isotopic	Weekly Composite	Gamma Spectroscopy with computerized data reduction
2. Tritium	Weekly Composite	Distillation and liquid scintillation counting
3. Gross beta*	Quarterly Composite	Chemical separation and gas flow proportional or scintillation counting
4. Sr-89 & 90**	Quarterly Composite	Chemical separation and gas flow proportional or scintillation counting

*Gross beta anaylsis is used for sample screening.

** If the Gross beta analysis yields a detectable value above background, a Sr-89/90 analysis will be performed.

Gamma isotopic measurements are performed in-house using germanium detectors with a resolution of 2.0 keV or lower. The detectors are shielded by four inches of lead. A weekly composite sample is typically counted to Environmental MDC's and a peak search of the resulting gamma ray spectrum is performed. Energy and net count data for all significant peaks are determined and a quantitative reduction or MDC calculation is performed to ensure that the MDC's are met for the nuclides specified in the ODCM Chapter 10 (i.e., Mn-54, Fe-59,Co-58, Co-60, Zn-65, Mo-99, Cs-134, Cs-137, Ce-141 and Ce-144). The quantitative calculations, corrections for counting time, decay time, sample volume, sample geometry, detector efficiency, baseline counts, branching ratio and MDC calculations, are made based on the counts at the location in the spectrum where the peak for that radionuclide would be located, if present. Typically achieved liquid effluent sample analyses minimum detectable concentrations are reported in Table 1-4. Tritium, Gross Beta, Sr-89 and Sr-90 are, in some cases, analyzed offsite. The radionuclide concentrations determined by gamma spectroscopic analysis of the weekly composite sample, in addition to the most current sample analysis results available for tritium, gross beta, Sr-89 and Sr-90, are used along with the corresponding ECL values to determine the ECL fraction for these composite samples. This ECL fraction is then used, with the appropriate safety factors, tolerance factors, and the expected dilution stream flow to calculate projected dose released.

Radionuclide concentrations, safety factors and dilution stream flow rate are entered into the computer and a pre-release printout is generated for each release period. When the release period is complete, the release permit is updated with the actual release data collected during the release period. These data are input into the computer and a post-release printout is generated. The post release printout contains the actual release rates, the actual release concentrations and quantities, the actual dilution flow, and the calculated doses to a Member of the Public. Cumulative dose results are tabulated along with the percent of the ODCM limit for each release period, for the current quarter and year.

1.5 Total Error Estimation

The maximum error associated with volume and flow measurements, based upon plant calibration practice, is estimated to be + or - 10%. The average error associated with counting is estimated to be less than + or - 15%. Therefore, the total error estimation is + or - 18%.

1.6 Liquid Effluent Release Data

Regulatory Guide 1.21, Tables 2A and 2B are found in this report as Table 1-1A, for Unit 1, Table 1-1B, for Unit 2 and Table 1-1C, for the site; and Table 1-2A, for Unit 1, 1-2B, for Unit 2, and Table 1-2C, for the site. Typical liquid minimum detectable concentrations (MDC's) used for analyses are found in Table 1-4. The values for the four categories of Tables 1-1A, and 1-1B, and 1-1C, are calculated and the Tables completed as follows:

1. Fission and activation products - The total release values (not including tritium, gases, and alpha) are comprised of the sum of the measured individual radionuclide activities. This sum is for each batch released to the river for the respective quarter.

2. Tritium - The measured tritium concentrations in the monthly composite samples are used to calculate the total release and average diluted concentration during each period.

3. Dissolved and entrained gases - Concentrations of dissolved and entrained gases in liquid effluents are measured by germanium spectroscopy using a one liter sample from each liquid radwaste batch. The measured concentrations are used to calculate the total release and the average diluted concentration during the period. Radioisotopes of iodine in any form are also determined during the isotopic analysis for each batch; therefore, a separate analysis for possible gaseous forms is not performed because it would not provide additional information.

4. Gross alpha radioactivity - The measured gross alpha concentrations in the monthly composite samples are used to calculate the total release of alpha radioactivity.

1.7 Radiological Impact Due to Liquid Releases

Doses to a Member of the Public due to radioactivity in liquid effluents were calculated in accordance with the Offsite Dose Calculation Manual. Results are presented in Table 1-3A for Unit 1, and 1-3B for Unit 2, for all four quarters.

1.8 Liquid Effluents - Batch Releases

Batch Release information for Units 1 and 2 is summarized in the following tables:
Unit 1 Liquid Batch Releases: Table 1-5A
Unit 2 Liquid Batch Releases: Table 1-5B

1.9 Liquid Effluents - Continuous Releases

Continuous Release information is summarized in the following tables:
Unit 1 Liquid Continuous Releases: Table 1-2A
Unit 2 Liquid Continuous Releases: Table 1-2B Hatch
Site Continuous Releases: Table 1-2C

1.10 Liquid Effluents - Abnormal Releases

There were no abnormal liquid releases for this reporting period.

```
ERROR: syntaxerror
OFFENDING COMMAND: -T A  }     } @ }   }   ? u _ u _ v   @ o‡(-6@, o†  6, q‡ :! @

STACK:

(
            OS/2 BZ¯  ,    'cvt  · l   ,    fpgm{ L″   4   eglyf · fi  }t  f head  °
)
-mark-
/sfnts
false
```

KGLOWERY

2016 ARERR Hatch.pdf
04/22/16 10:09 AM

SOUTHERN COMPANY

E. I. HATCH NUCLEAR PLANT – UNITS 1 AND 2

NRC DOCKET NOS. 50-321 AND 50-366

FACILITY OPERATING LICENSE NOS. DPR-57 AND NPF-5

ANNUAL RADIOACTIVE EFFLUENT RELEASE REPORT

FOR

JANUARY 1, 2015 TO DECEMBER 31, 2015

Prepared by: Daniel B. Carter

Reviewed by: Bill Durall

ACKNOWLEDGEMENT OF OWNERSHIP

The contents of this Annual Radioactive Effluent Release Report, contained herein, are true and accurate to the best of my knowledge. I understand that I am ultimately responsible for the information that has been captured within these pages.

Bill Durell Bill Durell

Chemistry Manager

SOUTHERN COMPANY

E. I. HATCH NUCLEAR PLANT

UNITS NO. 1 & 2

ANNUAL REPORT

PLANT RADIOACTIVE EFFLUENT RELEASES

JANUARY 1, 2015 THROUGH DECEMBER 31, 2015

SECTION	TITLE	PAGE
1.0	Liquid Effluents	1
1.1	Regulatory Requirements	1
1.1.1	Concentration Limits	1
1.1.2	Dose Limits	1
1.2	Effluent Concentration Limit	1
1.3	Measurements and Approximations of Total Radioactivity for Liquid Radwaste	2
1.3.1	Total Radioactivity Determination for Liquid Radwaste	2
1.4	Measurements and Approximations of Total Radioactivity for Groundwater Outfalls – Y22N003A/12B and Y22N008A	4
1.4.1	Total Radioactivity Determination for Groundwater Outfalls	4
1.5	Total Error Estimation	5
1.6	Liquid Effluent Release Data	6
1.7	Radiological Impact Due to Liquid Releases	7
1.8	Liquid Effluents - Batch Releases	7
1.9	Liquid Effluents - Continuous Releases	7

SECTION	TITLE	PAGE
1.10	Liquid Effluents - Abnormal Releases	7
2.0	Gaseous Effluents	28
2.1	Regulatory Requirements	28
2.1.1	Dose Rate Limits	28
2.1.2	Air Doses Due to Noble Gases in Gaseous Releases	28
2.1.3	Doses to a Member of the Public	28
2.2	Measurements and Approximations of Total Radioactivity	29
2.2.1	Sample Collection and Analysis	29
2.2.2	Total Quantities of Radioactivity, Dose Rates and Cumulative Doses	30
2.2.2.1	Fission and Activation Gases	30
2.2.2.2	Radioiodine, Tritium and Particulate Releases	30
2.2.2.3	Gross Alpha Release	31
2.2.3	Total Error Estimation	31
2.3	Gaseous Effluent Release Data	33
2.4	Radiological Impact Due to Gaseous Releases	34
2.5	Gaseous Effluents - Batch Releases	34
2.6	Gaseous Effluents - Abnormal Releases	34
3.0	Solid Waste	63
3.1	Regulatory Requirements	63
3.1.1	Solid Radioactive Waste System	63
3.1.2	Reporting Requirements	63

SECTION	TITLE	PAGE
3.2	Solid Waste Data	64
4.0	Doses to Members of the Public Inside The Site Boundary	69
4.1	Regulatory Requirements	69
4.2	Demonstration of Compliance	69
5.0	Total Dose from Uranium Fuel Cycle (40 CFR 190)	74
5.1	Regulatory Requirements	74
5.2	Demonstration of Compliance	74
6.0	Meteorological Data	75
7.0	Program Deviations	76
7.1	Inoperable Liquid or Gaseous Effluent Monitoring Instrumentation	76
7.1.1	Regulatory Requirements	76
7.1.2	Description of Deviations	76
7.2	Tanks Exceeding Curie Content Limits	76
7.2.1	Regulatory Requirements	76
7.2.2	Description of Deviations	76
7.3	Effluent Sample Analysis Exceeding Minimum Detectable Concentration (MDC)	76
7.3.1	Regulatory Requirement	76
7.3.2	Description of Deviation	76

SECTION	TITLE	PAGE
8.0	Changes to the Plant Hatch Offsite Dose Calculation Manual (ODCM)	77
8.1	Regulatory Requirements	77
8.2	Description of Changes	77
9.0	Major Changes to the Liquid, Gaseous or Solid Radwaste Treatment Systems	78
9.1	Regulatory Requirements	78
9.2	Description of Major Changes	78

SOUTHERN COMPANY

E. I. HATCH NUCLEAR PLANT

UNITS NO. 1 & 2

ANNUAL REPORT

PLANT RADIOACTIVE EFFLUENT RELEASES

TABLE	LIST OF TABLES	PAGE
1-1A	Liquid Effluents - Summation of All Releases Unit 1 (Quarters 1, 2, 3 and 4)	8
1-1B	Liquid Effluents - Summation of All Releases Unit 2 (Quarters 1, 2, 3 and 4)	9
1-1C	Liquid Effluents - Summation of All Releases Site (Quarters 1, 2, 3 and 4)	10
1-2A	Liquid Effluents - Unit 1 (Quarters 1, 2, 3 and 4)	11
1-2B	Liquid Effluents - Unit 2 (Quarters 1, 2, 3 and 4)	14
1-2C	Liquid Effluents - Site (Quarters 1, 2, 3 and 4)	17
1-3A	Doses to a Member of The Public Due to Liquid Releases Unit 1 (Quarters 1, 2, 3 and 4)	20
1-3B	Doses to a Member of The Public Due to Liquid Releases Unit 2 (Quarters 1, 2, 3 and 4)	21
1-4	Minimum Detectable Concentration - Liquid Sample Analysis	22
1-5A	Liquid Effluents - Batch Release Summary Unit 1	23
1-5B	Liquid Effluents - Batch Release Summary Unit 2	24

TABLE	LIST OF TABLES	PAGE
1-6A	Liquid Effluents - Abnormal Release Summary Unit 1	25
1-6B	Liquid Effluents - Abnormal Release Summary Unit 2	26
1-6C	Liquid Effluents - Abnormal Release Summary Site	27
2-1A	Gaseous Effluents - Summation of All Releases - Unit 1 (Quarters 1, 2, 3 and 4)	35
2-1B	Gaseous Effluents - Summation of All Releases - Unit 2 (Quarters 1, 2, 3 and 4)	36
2-1C	Gaseous Effluents - Summation of All Releases - Site (Quarters 1, 2, 3 and 4)	37
2-2A	Gaseous Effluents - Elevated Releases Unit 1 (Quarters 1, 2, 3 and 4)	38
2-2B	Gaseous Effluents - Elevated Releases Unit 2 (Quarters 1, 2, 3 and 4)	41
2-2C	Gaseous Effluents - Elevated Releases Site (Quarters 1, 2, 3 and 4)	44
2-3A	Gaseous Effluents - Ground Level Releases Unit 1 (Quarters 1, 2, 3 and 4)	47
2-3B	Gaseous Effluents - Ground Level Releases Unit 2 (Quarters 1, 2, 3 and 4)	49
2-3C	Gaseous Effluents - Ground Level Releases Site (Quarters 1, 2, 3 and 4)	51
2-4A	Air Doses Due to Noble Gases in Gaseous Releases - Unit 1 (Quarters 1, 2, 3 and 4)	53

TABLE	LIST OF TABLES	PAGE

2-4B	Air Doses Due to Noble Gases in Gaseous Releases - Unit 2 (Quarters 1, 2, 3 and 4)	54
2-5A	Doses to a Member of the Public Due to Radioiodine, Tritium, and Particulates in Gaseous Releases - Unit 1 (Quarters 1, 2, 3 and 4)	55
2-5B	Doses to a Member of the Public Due to Radioiodine, Tritium, and Particulates in Gaseous Releases - Unit 2 (Quarters 1, 2, 3 and 4)	56
2-6	Minimum Detectable Concentration - Gaseous Sample Analyses	57
2-7A	Gaseous Effluents - Batch Release Summary Unit 1	58
2-7B	Gaseous Effluents - Batch Release Summary Unit 2	59
2-8A	Gaseous Effluents - Abnormal Release Summary Unit 1	60
2-8B	Gaseous Effluents - Abnormal Release Summary Unit 2	61
2-8C	Gaseous Effluents - Abnormal Release Summary Site	62
3-1	Solid Waste and Irradiated Fuel Shipments	65
4-1	Doses to a Member of the Public Due to Activities Inside The Site Boundary	70

ATTACHMENT	TITLE	PAGE
APPENDIX A	Carbon-14	79
APPENDIX B	Summary of Groundwater Protection Program	81

1.0 Liquid Effluents

1.1 Regulatory Requirements

1.1.1 Concentration Limits

The concentration of radioactive material released in liquid effluents to UNRESTRICTED AREAS shall be limited to ten times the concentrations specified in 10 CFR Part 20, Appendix B, Table 2, Column 2, for radionuclides other than dissolved or entrained noble gases. For dissolved or entrained noble gases, the concentration shall be limited to 1.0E-04 microcuries/ml total activity.

1.1.2 Dose Limits

The dose or dose commitment, to a MEMBER OF THE PUBLIC from radioactive materials in liquid effluents released from each unit to UNRESTRICTED AREAS, shall be limited:

a. During any calendar quarter, to less than or equal to 1.5 mrems to the whole body and to less than or equal to 5 mrems to any organ, and

b. During any calendar year, to less than or equal to 3 mrems to the whole body and to less than or equal to 10 mrems to any organ.

1.2 Effluent Concentration Limit

ECL values used in determining allowable liquid radwaste release rates and concentrations, for principal gamma emitters, I-131, tritium, Sr-89, Sr-90 and Fe-55, are taken from 10 CFR Part 20, Appendix B, Table 2, Column 2.
A tolerance factor of up to 10 is utilized to allow flexibility in establishing practical monitor set points which can accommodate effluent releases at concentrations higher than the ECL values stated in 10 CFR 20, Appendix B, Table 2, Column 2.

For dissolved or entrained noble gases in liquid radwaste, the ECL is 1.0E-04 uCi/ml total activity.

For gross alpha in liquid radwaste, the ECL is 2E-09 uCi/ml.

Furthermore, for all the above radionuclides, or categories of radioactivity, the overall ECL fraction is determined in accordance with 10 CFR Part 20, Appendix B.

The method utilizing the ECL fraction to determine liquid radwaste release rates and effluent radiation monitor set points is described in Subsection 1.3 of this report.

The method utilizing the ECL fraction to determine the dose released from groundwater outfalls is described in Subsection 1.4 of this report.

1.3 Measurements and Approximations of Total Radioactivity for Liquid Radwaste

Prior to the release of any tank containing liquid radwaste, following the required recirculations, samples are collected and analyzed in accordance with the Edwin I. Hatch Nuclear Plant Offsite Dose Calculation Manual (ODCM) Table 2-3. A sample from each tank planned for release is analyzed for principal gamma emitters, I-131, and dissolved and entrained noble gases, by gamma spectroscopy. Monthly and quarterly composites are prepared for analysis by extracting aliquots from each sample taken from the tanks released.
Liquid radwaste sample analyses are performed as described in Section 1.3.1.

1.3.1 Total Radioactivity Determination for Liquid Radwaste

MEASUREMENT	FREQUENCY	METHOD
1. Gamma Isotopic	Each Batch	Gamma Spectroscopy with computerized data reduction
2. Dissolved or entrained noble gas	Each Batch	Gamma Spectroscopy with computerized data reduction
3. Tritium	Monthly Composite	Distillation and liquid scintillation counting
4. Gross alpha	Monthly Composite	Gas flow proportional counting
5. Sr-89 & 90	Quarterly Composite	Chemical separation and gas flow proportional counting
6. Fe-55	Quarterly Composite	Chemical separation and liquid scintillation counting

Gamma isotopic measurements are performed in-house using germanium detectors with a resolution of 2.0 keV or lower. The detectors are shielded by four inches of lead. A liquid radwaste sample is typically counted for 2000 seconds and a peak search of the resulting gamma ray spectrum is performed. Energy and net count data for all significant peaks are determined and a quantitative reduction or MDC calculation is performed to ensure that the MDC's are met for the nuclides specified in the ODCM Chapter 10 (i.e., Mn-54, Fe-59, Co-58, Co-60, Zn-65, Mo-99, Cs-134, Cs-137, Ce-141 and Ce-144). The quantitative calculations, corrections for counting time, decay time, sample volume, sample geometry, detector efficiency, baseline counts, branching ratio and MDC calculations, are made based on the counts at the location in the spectrum where the peak for that radionuclide would be located, if present. Typically achieved liquid effluent sample analyses minimum detectable concentrations are reported in Table 1-4. Tritium, Gross Alpha, Sr-89, Sr-90 and Fe-55 are, in some cases, analyzed offsite. The radionuclide concentrations determined by gamma spectroscopic analysis of samples taken from tanks planned for release, in addition to the most current sample analysis results available for tritium, gross alpha, Sr-89, Sr-90 and Fe-55, are used along with the corresponding ECL values to determine the ECL fraction for these tanks. This ECL fraction is then used, with the appropriate safety factors, tolerance factors, and the expected dilution stream flow to calculate maximum permissible release rate and a liquid effluent monitor setpoint. The monitor setpoint is calculated to assure that the limits of the ODCM are not exceeded.

A monitor reading in excess of the calculated setpoint will result in an automatic termination of the liquid radwaste discharge. Liquid effluent discharge is also automatically terminated if the dilution stream flow rate falls below the minimum assured dilution flow rate used in the setpoint calculations and established as a setpoint on the dilution stream flow monitor.

Radionuclide concentrations, safety factors, dilution stream flow rate, and the liquid effluent radiation monitor calibration factor, are entered into the computer and a pre-release printout is generated. If the release is not permissible, appropriate warnings will be displayed on the computer screen. If the release is permissible, it is approved by an independent qualified technician. The pertinent information is transferred manually from the prerelease printout to a one-page release permit, which is forwarded to Radwaste Operations. When the release is completed, the release permit is returned from Radwaste Operations to Chemistry with the actual release data provided. These data are input into the computer and a post-release printout is generated. The post release printout contains the actual release rates, the actual release concentrations and quantities, the actual dilution flow, and the calculated doses to a Member of the Public.

1.4 Measurements and Approximations of Total Radioactivity for Groundwater Outfall –Y22N008A

Samples are collected and analyzed in accordance with the Edwin I. Hatch Nuclear Plant Offsite Dose Calculation Manual (ODCM) Table 2-3. Weekly, monthly and quarterly composites are prepared for analysis by extracting aliquots from each outfall's automatic sampler, which collects a composite sample over a seven-day period. Sample analyses are performed as described in Section 1.4.1.

1.4.1 Total Radioactivity Determination for Groundwater Outfalls

MEASUREMENT	FREQUENCY	METHOD
1. Gamma Isotopic	Weekly Composite	Gamma Spectroscopy with computerized data reduction
2. Tritium	Weekly Composite	Distillation and liquid scintillation counting
3. Gross beta*	Quarterly Composite	Chemical separation and gas flow proportional or scintillation counting
4. Sr-89 & 90**	Quarterly Composite	Chemical separation and gas flow proportional or scintillation counting

*Gross beta anaylsis is used for sample screening.

** If the Gross beta analysis yields a detectable value above background, a Sr-89/90 analysis will be performed.

Gamma isotopic measurements are performed in-house using germanium detectors with a resolution of 2.0 keV or lower. The detectors are shielded by four inches of lead. A weekly composite sample is typically counted to Environmental MDC's and a peak search of the resulting gamma ray spectrum is performed. Energy and net count data for all significant peaks are determined and a quantitative reduction or MDC calculation is performed to ensure that the MDC's are met for the nuclides specified in the ODCM Chapter 10 (i.e., Mn-54, Fe-59,Co-58, Co-60, Zn-65, Mo-99, Cs-134, Cs-137, Ce-141 and Ce-144). The quantitative calculations, corrections for counting time, decay time, sample volume, sample geometry, detector efficiency, baseline counts, branching ratio and MDC calculations, are made based on the counts at the location in the spectrum where the peak for that radionuclide would be located, if present. Typically achieved liquid effluent sample analyses minimum detectable concentrations are reported in Table 1-4. Tritium, Gross Beta, Sr-89 and Sr-90 are, in some cases, analyzed offsite. The radionuclide concentrations determined by gamma spectroscopic analysis of the weekly composite sample, in addition to the most current sample analysis results available for tritium, gross beta, Sr-89 and Sr-90, are used along with the corresponding ECL values to determine the ECL fraction for these composite samples. This ECL fraction is then used, with the appropriate safety factors, tolerance factors, and the expected dilution stream flow to calculate projected dose released.

Radionuclide concentrations, safety factors and dilution stream flow rate are entered into the computer and a pre-release printout is generated for each release period. When the release period is complete, the release permit is updated with the actual release data collected during the release period. These data are input into the computer and a post-release printout is generated. The post release printout contains the actual release rates, the actual release concentrations and quantities, the actual dilution flow, and the calculated doses to a Member of the Public. Cumulative dose results are tabulated along with the percent of the ODCM limit for each release period, for the current quarter and year.

1.5 Total Error Estimation

The maximum error associated with volume and flow measurements, based upon plant calibration practice, is estimated to be + or - 10%. The average error associated with counting is estimated to be less than + or - 15%. Therefore, the total error estimation is + or - 18%.

1.6 Liquid Effluent Release Data

Regulatory Guide 1.21, Tables 2A and 2B are found in this report as Table 1-1A, for Unit 1, Table 1-1B, for Unit 2 and Table 1-1C, for the site; and Table 1-2A, for Unit 1, 1-2B, for Unit 2, and Table 1-2C, for the site. Typical liquid minimum detectable concentrations (MDC's) used for analyses are found in Table 1-4. The values for the four categories of Tables 1-1A, and 1-1B, and 1-1C, are calculated and the Tables completed as follows:

1. Fission and activation products - The total release values (not including tritium, gases, and alpha) are comprised of the sum of the measured individual radionuclide activities. This sum is for each batch released to the river for the respective quarter.

2. Tritium - The measured tritium concentrations in the monthly composite samples are used to calculate the total release and average diluted concentration during each period.

3. Dissolved and entrained gases - Concentrations of dissolved and entrained gases in liquid effluents are measured by germanium spectroscopy using a one liter sample from each liquid radwaste batch. The measured concentrations are used to calculate the total release and the average diluted concentration during the period. Radioisotopes of iodine in any form are also determined during the isotopic analysis for each batch; therefore, a separate analysis for possible gaseous forms is not performed because it would not provide additional information.

4. Gross alpha radioactivity - The measured gross alpha concentrations in the monthly composite samples are used to calculate the total release of alpha radioactivity.

1.7 *Radiological Impact Due to Liquid Releases*

Doses to a Member of the Public due to radioactivity in liquid effluents were calculated in accordance with the Offsite Dose Calculation Manual. Results are presented in Table 1-3A for Unit 1, and 1-3B for Unit 2, for all four quarters.

1.8 *Liquid Effluents - Batch Releases*

Batch Release information for Units 1 and 2 is summarized in the following tables:

Unit 1 Liquid Batch Releases:	Table 1-5A
Unit 2 Liquid Batch Releases:	Table 1-5B

1.9 *Liquid Effluents - Continuous Releases*

Continuous Release information is summarized in the following tables:

Unit 1 Liquid Continuous Releases:	Table 1-2A
Unit 2 Liquid Continuous Releases:	Table 1-2B Hatch
Site Continuous Releases:	Table 1-2C

1.10 *Liquid Effluents - Abnormal Releases*

There were no abnormal liquid releases for this reporting period.

Table 1-1A

Hatch Nuclear Plant

RADIOACTIVE EFFLUENT RELEASE REPORT - 2015

Liquid Effluents - Summation Of All Releases

Unit: 1

Starting: 1-Jan- 2015 Ending: 31-Dec-2015

Type of Effluent	Units	1ST Quarter	2ND Quarter	3RD Quarter	4TH Quarter
A. Fission And Activation Products					
1. Total Release (not including tritium, gases, alpha)	Curies	4.23E-03	1.59E-03	8.44E-04	3.95E-04
2. Average diluted concentration during period	uCi/mL	1.25E-08	2.48E-09	1.52E-09	1.71E-09
3. Percent of Applicable Limit	%	*	*	*	*
B. Tritium					
1. Total Release	Curies	5.43E+00	6.35E+00	3.24E+00	1.68E+00
2. Average diluted Concentration during period	uCi/mL	1.61E-05	9.91E-06	5.84E-06	7.27E-06
3. Percent of Applicable Limit	%	*	*	*	*
C. Dissolved and Entrained Gases					
1. Total Release	Curies	1.53E-05	1.82E-05	0.00E+00	1.68E-06
2. Average diluted Concentration during period	uCi/mL	4.53E-11	2.84E-11	0.00E+00	7.26E-12
3. Percent of Applicable Limit	%	*	*	*	*
D: Gross Alpha Radioactivity					
1. Total Release	Curies	0.00E+00	0.00E+00	0.00E+00	0.00E+00
E: Waste Vol Release (Pre-Dilution)	Liters	1.83E+06	2.93E+06	2.33E+06	1.04E+06
F. Volume of Dilution Water Used	Liters	3.37E+08	6.41E+08	5.55E+08	2.31E+08

* Applicable limits are expressed in terms of dose. See Tables 1-3A and 1-3B of this report.

Table 1-1B

Hatch Nuclear Plant

RADIOACTIVE EFFLUENT RELEASE REPORT - 2015

Liquid Effluents - Summation Of All Releases

Unit: 2

Starting: 1-Jan- 2015 Ending: 31-Dec-2015

Type of Effluent	Units	1ST Quarter	2ND Quarter	3RD Quarter	4TH Quarter
A. Fission And Activation Products					
1. Total Release (not including tritium, gases, alpha)	Curies	2.16E-03	4.79E-04	7.44E-04	3.89E-04
2. Average diluted concentration during period	uCi/mL	4.96E-10	8.37E-11	1.32E-10	9.36E-11
3. Percent of Applicable Limit	%	*	*	*	*
B. Tritium					
1. Total Release	Curies	1.43E+00	5.56E+00	2.39E+00	7.08E-01
2. Average diluted Concentration during period	uCi/mL	3.29E-07	9.71E-07	4.24E-07	1.71E-07
3. Percent of Applicable Limit	%	*	*	*	*
C. Dissolved and Entrained Gases					
1. Total Release	Curies	7.14E-06	4.24E-05	6.16E-06	5.67E-07
2. Average diluted Concentration during period	uCi/mL	1.64E-12	7.41E-12	1.09E-12	1.37E-13
3. Percent of Applicable Limit	%	*	*	*	*
D: Gross Alpha Radioactivity					
1. Total Release	Curies	0.00E+00	0.00E+00	0.00E+00	0.00E+00
E: Waste Vol Release (Pre-Dilution)	Liters	3.92E+06	5.58E+06	4.88E+06	4.01E+06
F. Volume of Dilution Water Used	Liters	4.35E+09	5.73E+09	5.64E+09	4.15E+09

* Applicable limits are expressed in terms of dose. See Tables 1-3A and 1-3B of this report.

Table 1-1C

Hatch Nuclear Plant

RADIOACTIVE EFFLUENT RELEASE REPORT - 2015

Liquid Effluents - Summation Of All Releases

Unit: Site

Starting: 1-Jan- 2015 Ending: 31-Dec-2015

Type of Effluent	Units	1ST Quarter	2ND Quarter	3RD Quarter	4TH Quarter
A. Fission And Activation Products					
1. Total Release (not including tritium, gases, alpha)	Curies	6.39E-03	2.07E-03	1.59E-03	7.84E-04
2. Average diluted concentration during period	uCi/mL	1.36E-09	3.24E-10	2.56E-10	1.79E-10
3. Percent of Applicable Limit	%	*	*	*	*
B. Tritium					
1. Total Release	Curies	6.87E+00	1.19E+01	5.63E+00	2.39E+00
2. Average diluted Concentration during period	uCi/mL	1.46E-06	1.87E-06	9.09E-07	5.45E-07
3. Percent of Applicable Limit	%	*	*	*	*
C. Dissolved and Entrained Gases					
1. Total Release	Curies	2.24E-05	6.06E-05	6.16E-06	2.25E-06
2. Average diluted Concentration during period	uCi/mL	4.78E-12	9.52E-12	9.94E-13	5.13E-13
3. Percent of Applicable Limit	%	*	*	*	*
D: Gross Alpha Radioactivity					
1. Total Release	Curies	0.00E+00	0.00E+00	0.00E+00	0.00E+00
E: Waste Vol Release (Pre-Dilution)	Liters	5.75E+06	8.51E+06	7.21E+06	5.05E+06
F. Volume of Dilution Water Used	Liters	4.69E+09	6.37E+09	6.20E+09	4.38E+09

* Applicable limits are expressed in terms of dose. See Tables 1-3A and 1-3B of this report.

Table 1-2A

Hatch Nuclear Plant

RADIOACTIVE EFFLUENT RELEASE REPORT - 2015

Liquid Effluents

Unit: 1

Starting: 1-Jan-2015 Ending: 31-Dec-2015

		Continuous Mode			
Nuclides Released	**Unit**	**1ST Quarter**	**2ND Quarter**	**3RD Quarter**	**4TH Quarter**
Fission & Activation Products					
No Nuclides Found	Curies	0.00E+00	0.00E+00	0.00E+00	0.00E+00
Tritium					
No Nuclides Found	Curies	0.00E+00	0.00E+00	0.00E+00	0.00E+00
Dissolved And Entrained Gases					
No Nuclides Found	Curies	0.00E+00	0.00E+00	0.00E+00	0.00E+00
Gross Alpha Radioactivity					
No Nuclides Found	Curies	0.00E+00	0.00E+00	0.00E+00	0.00E+00

Zeroes in this table indicates that no radioactivity was present at detectable levels.
See Table 1-4 for typical minimum detectable concentrations.

Table 1-2A

Hatch Nuclear Plant

RADIOACTIVE EFFLUENT RELEASE REPORT - 2015

Liquid Effluents

Unit: 1

Starting: 1-Jan-2015 Ending: 31-Dec-2015

		Batch Mode			
Nuclides Released	**Unit**	**1ST Quarter**	**2ND Quarter**	**3RD Quarter**	**4TH Quarter**
Fission & Activation Products					
Mn-54	Curies	8.39E-04	1.00E-04	5.23E-05	1.77E-05
Sn-117M	Curies	0.00E+00	0.00E+00	0.00E+00	2.29E-07
Te-129M	Curies	0.00E+00	0.00E+00	2.84E-05	0.00E+00
Cs-134	Curies	7.54E-05	0.00E+00	0.00E+00	0.00E+00
Sn-113	Curies	7.72E-07	0.00E+00	0.00E+00	0.00E+00
Na-24	Curies	2.02E-04	5.06E-04	1.82E-04	1.71E-05
Zn-69M	Curies	4.14E-05	0.00E+00	2.82E-06	0.00E+00
Cs-137	Curies	7.05E-04	1.32E-04	1.85E-04	5.22E-05
Zn-65	Curies	2.81E-04	6.49E-05	1.64E-05	8.39E-06
Sr-89	Curies	4.03E-05	3.55E-05	0.00E+00	0.00E+00
Co-60	Curies	1.23E-03	5.90E-04	3.62E-04	2.67E-04
Fe-55	Curies	1.06E-04	1.25E-04	0.00E+00	2.89E-05
Ag-110M	Curies	6.93E-05	0.00E+00	0.00E+00	0.00E+00
Au-199	Curies	0.00E+00	0.00E+00	0.00E+00	5.50E-07
Cr-51	Curies	2.64E-04	0.00E+00	0.00E+00	0.00E+00
Nb-97	Curies	1.04E-04	0.00E+00	0.00E+00	0.00E+00
Sb-124	Curies	5.86E-05	2.82E-07	0.00E+00	0.00E+00
Co-58	Curies	1.83E-04	3.26E-05	1.47E-05	3.07E-06
Sr-92	Curies	4.54E-06	0.00E+00	0.00E+00	0.00E+00
Mn-56	Curies	2.53E-05	0.00E+00	0.00E+00	0.00E+00
Total For Period	**Curies**	**4.23E-03**	**1.59E-03**	**8.44E-04**	**3.95E-04**

Zeroes in this table indicates that no radioactivity was present at detectable levels.
See Table 1-4 for typical minimum detectable concentrations.

Table 1-2A

Hatch Nuclear Plant

RADIOACTIVE EFFLUENT RELEASE REPORT - 2015

Liquid Effluents

Unit: 1

Starting: 1-Jan-2015 Ending: 31-Dec-2015

		Batch Mode			
Nuclides Released	**Unit**	**1ST Quarter**	**2ND Quarter**	**3RD Quarter**	**4TH Quarter**
Tritium					
H-3	Curies	5.43E+00	6.35E+00	3.24E+00	1.68E+00
Dissolved And Entrained Gases					
Xe-135	Curies	8.56E-06	5.38E-06	0.00E+00	1.68E-06
Xe-133	Curies	6.71E-06	1.79E-06	0.00E+00	0.00E+00
Xe-131M	Curies	0.00E+00	1.11E-05	0.00E+00	0.00E+00
Total For Period	**Curies**	**1.53E-05**	**1.82E-05**	**0.00E+00**	**1.68E-06**
Gross Alpha Radioactivity					
No Nuclides Found	Curies	0.00E+00	0.00E+00	0.00E+00	0.00E+00

Zeroes in this table indicates that no radioactivity was present at detectable levels.
See Table 1-4 for typical minimum detectable concentrations.

Table 1-2B

Hatch Nuclear Plant

RADIOACTIVE EFFLUENT RELEASE REPORT - 2015

Liquid Effluents

Unit: 2

Starting: 1-Jan-2015 Ending: 31-Dec-2015

Nuclides Released	Unit	Continuous Mode			
		1ST Quarter	2ND Quarter	3RD Quarter	4TH Quarter
Fission & Activation Products					
No Nuclides Found	Curies	0.00E+00	0.00E+00	0.00E+00	0.00E+00
Tritium					
H-3	Curies	8.55E-03	6.07E-03	6.10E-03	5.98E-03
Dissolved And Entrained Gases					
No Nuclides Found	Curies	0.00E+00	0.00E+00	0.00E+00	0.00E+00
Gross Alpha Radioactivity					
No Nuclides Found	Curies	0.00E+00	0.00E+00	0.00E+00	0.00E+00

Zeroes in this table indicates that no radioactivity was present at detectable levels.
See Table 1-4 for typical minimum detectable concentrations.

Table 1-2B

Hatch Nuclear Plant

RADIOACTIVE EFFLUENT RELEASE REPORT - 2015

Liquid Effluents

Unit: 2

Starting: 1-Jan-2015 Ending: 31-Dec-2015

		Batch Mode			
Nuclides Released	**Unit**	**1ST Quarter**	**2ND Quarter**	**3RD Quarter**	**4TH Quarter**
Fission & Activation Products					
Co-57	Curies	0.00E+00	2.77E-07	0.00E+00	0.00E+00
Y-91M	Curies	0.00E+00	0.00E+00	9.05E-07	0.00E+00
Sr-92	Curies	2.27E-06	0.00E+00	0.00E+00	0.00E+00
Mn-54	Curies	4.45E-04	7.22E-05	1.58E-04	8.60E-05
Cs-137	Curies	8.13E-05	2.88E-05	2.33E-05	5.98E-06
Zr-95	Curies	1.99E-05	0.00E+00	0.00E+00	0.00E+00
As-76	Curies	0.00E+00	0.00E+00	6.29E-06	6.07E-06
Co-58	Curies	6.58E-05	2.14E-05	4.23E-05	2.58E-05
Zn-69M	Curies	0.00E+00	0.00E+00	0.00E+00	6.41E-07
Fe-59	Curies	3.44E-05	0.00E+00	0.00E+00	0.00E+00
Co-60	Curies	5.12E-04	1.76E-04	2.96E-04	1.19E-04
Sb-124	Curies	6.14E-05	2.46E-05	0.00E+00	0.00E+00
Na-24	Curies	0.00E+00	8.81E-06	8.24E-05	5.87E-05
Sr-90	Curies	3.45E-06	0.00E+00	0.00E+00	2.21E-06
Tc-99M	Curies	0.00E+00	0.00E+00	5.70E-07	5.31E-07
Nb-95	Curies	3.38E-05	1.53E-06	0.00E+00	0.00E+00
Sr-89	Curies	1.06E-05	3.70E-05	0.00E+00	0.00E+00
Cr-51	Curies	6.87E-04	2.25E-05	0.00E+00	0.00E+00
Ag-110M	Curies	7.90E-05	0.00E+00	0.00E+00	0.00E+00
Fe-55	Curies	2.19E-05	5.03E-05	0.00E+00	9.18E-06
Zn-65	Curies	8.51E-05	2.35E-05	1.07E-04	6.87E-05
I-133	Curies	0.00E+00	0.00E+00	1.48E-06	4.56E-06
Nb-97	Curies	9.49E-06	1.21E-05	2.30E-05	0.00E+00
I-131	Curies	0.00E+00	0.00E+00	2.59E-06	1.87E-06
Sb-125	Curies	8.35E-06	0.00E+00	0.00E+00	0.00E+00

Zeroes in this table indicates that no radioactivity was present at detectable levels.
See Table 1-4 for typical minimum detectable concentrations.

Table 1-2B

Hatch Nuclear Plant

RADIOACTIVE EFFLUENT RELEASE REPORT - 2015

Liquid Effluents

Unit: 2

Starting: 1-Jan-2015 Ending: 31-Dec-2015

		Batch Mode			
Nuclides Released	**Unit**	**1ST Quarter**	**2ND Quarter**	**3RD Quarter**	**4TH Quarter**
Total For Period	**Curies**	**2.16E-03**	**4.79E-04**	**7.44E-04**	**3.89E-04**
Tritium					
H-3	Curies	1.42E+00	5.55E+00	2.38E+00	7.02E-01
Dissolved And Entrained Gases					
Xe-135	Curies	5.80E-06	3.54E-05	9.14E-07	5.67E-07
Xe-133	Curies	1.35E-06	6.98E-06	5.25E-06	0.00E+00
Total For Period	**Curies**	**7.14E-06**	**4.24E-05**	**6.16E-06**	**5.67E-07**
Gross Alpha Radioactivity					
No Nuclides Found	Curies	0.00E+00	0.00E+00	0.00E+00	0.00E+00

Zeroes in this table indicates that no radioactivity was present at detectable levels.
See Table 1-4 for typical minimum detectable concentrations.

Table 1-2C

Hatch Nuclear Plant

RADIOACTIVE EFFLUENT RELEASE REPORT - 2015

Liquid Effluents

Unit: Site

Starting: 1-Jan-2015 Ending: 31-Dec-2015

		Continuous Mode			
Nuclides Released	**Unit**	**1ST Quarter**	**2ND Quarter**	**3RD Quarter**	**4TH Quarter**
Fission & Activation Products					
No Nuclides Found	Curies	0.00E+00	0.00E+00	0.00E+00	0.00E+00
Tritium					
H-3	Curies	8.55E-03	6.07E-03	6.10E-03	5.98E-03
Dissolved And Entrained Gases					
No Nuclides Found	Curies	0.00E+00	0.00E+00	0.00E+00	0.00E+00
Gross Alpha Radioactivity					
No Nuclides Found	Curies	0.00E+00	0.00E+00	0.00E+00	0.00E+00

Zeroes in this table indicates that no radioactivity was present at detectable levels.
See Table 1-4 for typical minimum detectable concentrations.

Table 1-2C

Hatch Nuclear Plant

RADIOACTIVE EFFLUENT RELEASE REPORT - 2015

Liquid Effluents

Unit: Site

Starting: 1-Jan-2015 Ending: 31-Dec-2015

Nuclides Released	Unit	Batch Mode			
		1ST Quarter	2ND Quarter	3RD Quarter	4TH Quarter
Fission & Activation Products					
Sr-92	Curies	6.82E-06	0.00E+00	0.00E+00	0.00E+00
Y-91M	Curies	0.00E+00	0.00E+00	9.05E-07	0.00E+00
Au-199	Curies	0.00E+00	0.00E+00	0.00E+00	5.50E-07
Co-60	Curies	1.74E-03	7.67E-04	6.58E-04	3.85E-04
I-133	Curies	0.00E+00	0.00E+00	1.48E-06	4.56E-06
Tc-99M	Curies	0.00E+00	0.00E+00	5.70E-07	5.31E-07
Cs-137	Curies	7.86E-04	1.61E-04	2.09E-04	5.82E-05
Mn-54	Curies	1.28E-03	1.72E-04	2.11E-04	1.04E-04
Fe-59	Curies	3.44E-05	0.00E+00	0.00E+00	0.00E+00
Cr-51	Curies	9.51E-04	2.25E-05	0.00E+00	0.00E+00
Co-58	Curies	2.48E-04	5.40E-05	5.70E-05	2.88E-05
Na-24	Curies	2.02E-04	5.14E-04	2.64E-04	7.58E-05
Cs-134	Curies	7.54E-05	0.00E+00	0.00E+00	0.00E+00
Zr-95	Curies	1.99E-05	0.00E+00	0.00E+00	0.00E+00
Fe-55	Curies	1.28E-04	1.75E-04	0.00E+00	3.80E-05
Mn-56	Curies	2.53E-05	0.00E+00	0.00E+00	0.00E+00
I-131	Curies	0.00E+00	0.00E+00	2.59E-06	1.87E-06
As-76	Curies	0.00E+00	0.00E+00	6.29E-06	6.07E-06
Sn-117M	Curies	0.00E+00	0.00E+00	0.00E+00	2.29E-07
Te-129M	Curies	0.00E+00	0.00E+00	2.84E-05	0.00E+00
Sr-90	Curies	3.45E-06	0.00E+00	0.00E+00	2.21E-06
Zn-65	Curies	3.66E-04	8.84E-05	1.23E-04	7.71E-05
Sn-113	Curies	7.72E-07	0.00E+00	0.00E+00	0.00E+00
Co-57	Curies	0.00E+00	2.77E-07	0.00E+00	0.00E+00
Zn-69M	Curies	4.14E-05	0.00E+00	2.82E-06	6.41E-07

Zeroes in this table indicates that no radioactivity was present at detectable levels.
See Table 1-4 for typical minimum detectable concentrations.

Table 1-2C

Hatch Nuclear Plant

RADIOACTIVE EFFLUENT RELEASE REPORT - 2015

Liquid Effluents

Unit: Site

Starting: 1-Jan-2015 Ending: 31-Dec-2015

		Batch Mode			
Nuclides Released	**Unit**	**1ST Quarter**	**2ND Quarter**	**3RD Quarter**	**4TH Quarter**
Nb-95	Curies	3.38E-05	1.53E-06	0.00E+00	0.00E+00
Sb-125	Curies	8.35E-06	0.00E+00	0.00E+00	0.00E+00
Sr-89	Curies	5.09E-05	7.25E-05	0.00E+00	0.00E+00
Sb-124	Curies	1.20E-04	2.49E-05	0.00E+00	0.00E+00
Ag-110M	Curies	1.48E-04	0.00E+00	0.00E+00	0.00E+00
Nb-97	Curies	1.14E-04	1.21E-05	2.30E-05	0.00E+00
Total For Period	**Curies**	**6.39E-03**	**2.07E-03**	**1.59E-03**	**7.84E-04**
Tritium					
H-3	Curies	6.86E+00	1.19E+01	5.63E+00	2.38E+00
Dissolved And Entrained Gases					
Xe-131M	Curies	0.00E+00	1.11E-05	0.00E+00	0.00E+00
Xe-135	Curies	1.44E-05	4.08E-05	9.14E-07	2.25E-06
Xe-133	Curies	8.05E-06	8.77E-06	5.25E-06	0.00E+00
Total For Period	**Curies**	**2.24E-05**	**6.06E-05**	**6.16E-06**	**2.25E-06**
Gross Alpha Radioactivity					
No Nuclides Found	Curies	0.00E+00	0.00E+00	0.00E+00	0.00E+00

Zeroes in this table indicates that no radioactivity was present at detectable levels.
See Table 1-4 for typical minimum detectable concentrations.

Table 1-3A

Hatch Nuclear Plant

RADIOACTIVE EFFLUENT RELEASE REPORT - 2015

Doses to a member of the public due to Liquid Releases

Unit: 1

Starting: 1-Jan-2015 Ending: 31-Dec-2015

Cumulative Doses Per Quarter

Organ	ODCM Lmt	Units	1ST Qtr	% ODCM	2ND Qtr	% ODCM	3RD Qtr	% ODCM	4TH Qtr	% ODCM
Total Body	1.50E+00	mRem	2.96E-03	1.98E-01	4.73E-04	3.15E-02	5.98E-04	3.99E-02	1.90E-04	1.27E-02
Thyroid	5.00E+00	mRem	4.05E-05	8.09E-04	4.36E-05	8.71E-04	2.56E-05	5.13E-04	1.23E-05	2.45E-04
Bone	5.00E+00	mRem	2.89E-03	5.78E-02	4.42E-04	8.83E-03	6.27E-04	1.25E-02	1.80E-04	3.60E-03
Kidney	5.00E+00	mRem	1.51E-03	3.02E-02	2.58E-04	5.16E-03	3.53E-04	7.05E-03	9.75E-05	1.95E-03
Lung	5.00E+00	mRem	5.03E-04	1.01E-02	1.10E-04	2.20E-03	1.17E-04	2.34E-03	3.99E-05	7.98E-04
GI-Lli	5.00E+00	mRem	1.09E-03	2.18E-02	3.66E-04	7.32E-03	2.79E-04	5.57E-03	1.57E-04	3.14E-03
Liver	5.00E+00	mRem	4.33E-03	8.66E-02	6.71E-04	1.34E-02	8.83E-04	1.77E-02	2.68E-04	5.36E-03

Cumulative Doses per Year

Organ	ODCM Lmt	Units	Year to Ending Date	% ODCM	Receptor	Limit
Thyroid	1.00E+01	mRem	1.22E-04	1.22E-03	MAX INDIVIDUAL LIQUID / Adult	Ann Cum Organ Liq Dose
Kidney	1.00E+01	mRem	2.22E-03	2.22E-02	MAX INDIVIDUAL LIQUID / Adult	Ann Cum Organ Liq Dose
Liver	1.00E+01	mRem	6.15E-03	6.15E-02	MAX INDIVIDUAL LIQUID / Adult	Ann Cum Organ Liq Dose
GI-Lli	1.00E+01	mRem	1.89E-03	1.89E-02	MAX INDIVIDUAL LIQUID / Adult	Ann Cum Organ Liq Dose
Total Body	3.00E+00	mRem	4.22E-03	1.41E-01	MAX INDIVIDUAL LIQUID / Adult	Ann Cum Tot Body Liq Dose
Bone	1.00E+01	mRem	4.14E-03	4.14E-02	MAX INDIVIDUAL LIQUID / Adult	Ann Cum Organ Liq Dose
Lung	1.00E+01	mRem	7.70E-04	7.70E-03	MAX INDIVIDUAL LIQUID / Adult	Ann Cum Organ Liq Dose

Table 1-3B

Hatch Nuclear Plant

RADIOACTIVE EFFLUENT RELEASE REPORT - 2015

Doses to a member of the public due to Liquid Releases

Unit: 2

Starting: 1-Jan-2015 Ending: 31-Dec-2015

Cumulative Doses Per Quarter

Organ	ODCM Lmt	Units	1ST Qtr	% ODCM	2ND Qtr	% ODCM	3RD Qtr	% ODCM	4TH Qtr	% ODCM
Total Body	1.50E+00	mRem	3.41E-04	2.27E-02	1.70E-04	1.13E-02	1.45E-04	9.66E-03	5.33E-05	3.55E-03
Bone	5.00E+00	mRem	3.26E-04	6.51E-03	1.25E-04	2.49E-03	1.07E-04	2.13E-03	4.04E-05	8.08E-04
Thyroid	5.00E+00	mRem	1.13E-05	2.26E-04	4.60E-05	9.20E-04	3.85E-05	7.71E-04	2.15E-05	4.30E-04
Kidney	5.00E+00	mRem	1.80E-04	3.60E-03	1.08E-04	2.15E-03	9.28E-05	1.86E-03	3.81E-05	7.63E-04
GI-Lli	5.00E+00	mRem	5.47E-04	1.09E-02	1.76E-04	3.51E-03	2.53E-04	5.06E-03	1.15E-04	2.29E-03
Liver	5.00E+00	mRem	4.93E-04	9.87E-03	2.25E-04	4.50E-03	2.05E-04	4.09E-03	7.69E-05	1.54E-03
Lung	5.00E+00	mRem	5.87E-05	1.17E-03	6.42E-05	1.28E-03	3.39E-05	6.78E-04	1.02E-05	2.05E-04

Cumulative Doses per Year

Organ	ODCM Lmt	Units	Year to Ending Date	% ODCM	Receptor	Limit
Total Body	3.00E+00	mRem	7.09E-04	2.36E-02	MAX INDIVIDUAL LIQUID / Adult	Ann Cum Tot Body Liq Dose
Liver	1.00E+01	mRem	1.00E-03	1.00E-02	MAX INDIVIDUAL LIQUID / Adult	Ann Cum Organ Liq Dose
Thyroid	1.00E+01	mRem	1.17E-04	1.17E-03	MAX INDIVIDUAL LIQUID / Adult	Ann Cum Organ Liq Dose
GI-Lli	1.00E+01	mRem	1.09E-03	1.09E-02	MAX INDIVIDUAL LIQUID / Adult	Ann Cum Organ Liq Dose
Bone	1.00E+01	mRem	5.97E-04	5.97E-03	MAX INDIVIDUAL LIQUID / Adult	Ann Cum Organ Liq Dose
Kidney	1.00E+01	mRem	4.18E-04	4.18E-03	MAX INDIVIDUAL LIQUID / Adult	Ann Cum Organ Liq Dose
Lung	1.00E+01	mRem	1.67E-04	1.67E-03	MAX INDIVIDUAL LIQUID / Adult	Ann Cum Organ Liq Dose

Table 1-4
E. I. HATCH NUCLEAR PLANT RADIOACTIVE
EFFLUENT RELEASE REPORT - 2015
MINIMUM DETECTABLE CONCENTRATIONS - LIQUID SAMPLE ANALYSES
STARTING: 1-Jan-2015 ENDING: 31-Dec-2015

The values in this table represent a priori Minimum Detectable Concentrations (MDC) that are typically achieved in laboratory analyses of liquid radwaste samples.

RADIONUCLIDE	***MDC***	***UNITS***
Mn-54	1.97E-08	uCi/ml
Fe-59	3.94E-08	uCi/ml
Co-58	1.59E-08	uCi/ml
Co-60	1.72E-08	uCi/ml
Zn-65	2.92E-08	uCi/ml
Mo-99	1.20E-07	uCi/ml
Cs-134	1.75E-08	uCi/ml
Cs-137	1.62E-08	uCi/ml
Ce-141	1.92E-08	uCi/ml
Ce-144	8.83E-08	uCi/ml
I-131	1.43E-08	uCi/ml
Xe-135	1.03E-08	uCi/ml
Fe-55	2.34E-08	uCi/ml
Sr-89	1.44E-08	uCi/ml
Sr-90	8.50E-09	uCi/ml
H-3	6.00E-07	uCi/ml

Table 1-5A

Hatch Nuclear Plant

RADIOACTIVE EFFLUENT RELEASE REPORT - 2015

Liquid Effluents - Batch Release Summary

Unit: 1

Starting: 1-Jan-2015 Ending: 31-Dec-2015

Liquid Releases	Units	1ST Quarter	2ND Quarter	3RD Quarter	4TH Quarter	Year Totals
1. Number of batch releases		51	84	70	32	237
2. Total time period for Batch releases	(Minutes)	6.51E+03	1.13E+04	9.75E+03	4.43E+03	3.20E+04
3. Maximum time period for a batch release	(Minutes)	1.69E+02	1.80E+02	1.77E+02	2.33E+02	2.33E+02
4. Average time period for a batch release	(Minutes)	1.28E+02	1.35E+02	1.39E+02	1.38E+02	1.35E+02
5. Minimum time period for a batch release	(Minutes)	8.70E+01	8.80E+01	8.80E+01	8.60E+01	8.60E+01
6. Average stream flow during periods of release of liquid effluent into a flowing stream *	(CFS)	1.65E+04	1.17E+04	3.21E+03	1.17E+04	1.08E+04

* Data obtained from United States Geological Survey (USGS) website

Table 1-5B

Hatch Nuclear Plant

RADIOACTIVE EFFLUENT RELEASE REPORT - 2015

Liquid Effluents - Batch Release Summary

Unit: 2

Starting: 1-Jan-2015 Ending: 31-Dec-2015

Liquid Releases	Units	1ST Quarter	2ND Quarter	3RD Quarter	4TH Quarter	Year Totals
1. Number of batch releases		16	67	53	13	149
2. Total time period for Batch releases	(Minutes)	1.74E+03	7.72E+03	5.51E+03	1.28E+03	1.62E+04
3. Maximum time period for a batch release	(Minutes)	1.23E+02	1.29E+02	1.20E+02	1.15E+02	1.29E+02
4. Average time period for a batch release	(Minutes)	1.09E+02	1.15E+02	1.04E+02	9.81E+01	1.09E+02
5. Minimum time period for a batch release	(Minutes)	8.00E+01	8.90E+01	7.10E+01	7.70E+01	7.10E+01
6. Average stream flow during periods of release of liquid effluent into a flowing stream *	(CFS)	1.65E+04	1.17E+04	3.21E+03	1.17E+04	1.08E+04

* Data obtained from United States Geological Survey (USGS) website

Table 1-6A

Hatch Nuclear Plant

RADIOACTIVE EFFLUENT RELEASE REPORT - 2015

Liquid Effluents - Abnormal Release Summary

Unit: 1

Starting: 1-Jan-2015 Ending: 31-Dec-2015

Liquid Releases	Units	1ST Quarter	2ND Quarter	3RD Quarter	4TH Quarter	Year Totals
1. Number of Releases		0	0	0	0	0
2. Total Time For All Releases	(Minutes)	0.00E+00	0.00E+00	0.00E+00	0.00E+00	0.00E+00
3. Maximum Time For A Release	(Minutes)	0.00E+00	0.00E+00	0.00E+00	0.00E+00	0.00E+00
4. Average Time For A Release	(Minutes)	0.00E+00	0.00E+00	0.00E+00	0.00E+00	0.00E+00
5. Minimum Time For A Release	(Minutes)	0.00E+00	0.00E+00	0.00E+00	0.00E+00	0.00E+00
6. Total activity for all releases	(Curies)	0.00E+00	0.00E+00	0.00E+00	0.00E+00	0.00E+00

Table 1-6B

Hatch Nuclear Plant

RADIOACTIVE EFFLUENT RELEASE REPORT - 2015

Liquid Effluents - Abnormal Release Summary

Unit: 2

Starting: 1-Jan-2015 Ending: 31-Dec-2015

Liquid Releases	Units	1ST Quarter	2ND Quarter	3RD Quarter	4TH Quarter	Year Totals
1. Number of Releases		0	0	0	0	0
2. Total Time For All Releases	(Minutes)	0.00E+00	0.00E+00	0.00E+00	0.00E+00	0.00E+00
3. Maximum Time For A Release	(Minutes)	0.00E+00	0.00E+00	0.00E+00	0.00E+00	0.00E+00
4. Average Time For A Release	(Minutes)	0.00E+00	0.00E+00	0.00E+00	0.00E+00	0.00E+00
5. Minimum Time For A Release	(Minutes)	0.00E+00	0.00E+00	0.00E+00	0.00E+00	0.00E+00
6. Total activity for all releases	(Curies)	0.00E+00	0.00E+00	0.00E+00	0.00E+00	0.00E+00

Table 1-6C

Hatch Nuclear Plant

RADIOACTIVE EFFLUENT RELEASE REPORT - 2015

Liquid Effluents - Abnormal Release Summary

Unit: Site

Starting: 1-Jan-2015 Ending: 31-Dec-2015

Liquid Releases	Units	1ST Quarter	2ND Quarter	3RD Quarter	4TH Quarter	Year Totals
1. Number of Releases		0	0	0	0	0
2. Total Time For All Releases	(Minutes)	0.00E+00	0.00E+00	0.00E+00	0.00E+00	0.00E+00
3. Maximum Time For A Release	(Minutes)	0.00E+00	0.00E+00	0.00E+00	0.00E+00	0.00E+00
4. Average Time For A Release	(Minutes)	0.00E+00	0.00E+00	0.00E+00	0.00E+00	0.00E+00
5. Minimum Time For A Release	(Minutes)	0.00E+00	0.00E+00	0.00E+00	0.00E+00	0.00E+00
6. Total activity for all releases	(Curies)	0.00E+00	0.00E+00	0.00E+00	0.00E+00	0.00E+00

2.0 *Gaseous Effluents*

2.1 Regulatory Requirements

The ODCM Specifications presented in this section are for Unit 1 and Unit 2.

2.1.1 Dose Rate Limits

The dose rate due to radioactive materials released in gaseous effluents from the site to areas at and beyond the SITE BOUNDARY shall be limited to the following:

a. For noble gases: Less than or equal to 500 mrems/yr. to the whole body and less than or equal to 3000 mrems/yr. to the skin and,

b. For Iodine-131, Iodine-133, tritium and for all radionuclides in particulate form with half lives greater than 8 days: Less than or equal to 1500 mrems/yr. to any organ.

2.1.2 Air Doses Due To Noble Gases in Gaseous Effluents

The air dose due to noble gases released in gaseous effluents, from each unit, to areas at and beyond the SITE BOUNDARY, shall be limited to the following:

a. During any calendar quarter: Less than or equal to 5 mrads for gamma radiation and less than or equal to 10 mrads for beta radiation, and

b. During any calendar year: Less than or equal to 10 mrads for gamma radiation and less than or equal to 20 mrads for beta radiation.

2.1.3 Doses To A Member of the Public

The dose to a MEMBER OF THE PUBLIC from Iodine-131, Iodine-133, tritium and all radionuclides in particulate form with half-lives greater than 8 days, in gaseous effluents released from each unit, to areas at and beyond the SITE BOUNDARY, shall be limited to the following.

a. During any calendar quarter: Less than or equal to 7.5 mrems to any organ.

b. During any calendar year: Less than or equal to 15 mrems to any organ.

2.2 *Measurements and Approximations of Total Radioactivity*

Waste gas release at Plant Hatch is confined to four paths: main stack (also called the offgas vent), Unit 1 reactor building vent; Unit 2 reactor building vent, and the recombiner building vent. Each of these four paths is continuously monitored for gaseous radioactivity.

2.2.1 *Sample Collection and Analysis*

Each of the four gaseous effluent paths is equipped with an integrating-type sample collection device for collecting particulates and iodines. Unless required more frequently under certain circumstances, samples are collected as follows:

1. Noble gas samples are collected by grab sampling monthly.

2. Tritium samples are collected by grab sampling monthly.

3. Radioiodine samples are collected by pulling the sample stream through a charcoal cartridge over a 7-day period.

4. Particulates are collected by pulling the sample stream through a particulate filter over a 7-day period.

5. The 7-day particulate filters above are analyzed for gross alpha activity.

6. Quarterly composite samples are prepared from the particulate filters collected over the previous quarter and the samples are analyzed for Sr-89 and Sr-90.

Sample analyses results and release flow rates from the four release points form the basis for calculating released quantities of radionuclide-specific radioactivity, the dose rates associated with gaseous releases, and the cumulative doses for the current quarter and year. This task is normally performed with computer assistance.

The noble gas grab sample analysis results are used along with maximum expected release flow rates from each of the four vents to calculate monitor setpoints for the gaseous effluent monitors serving the four release points. Calculation of monitor setpoints is described in the ODCM. Typically achieved minimum detectable concentrations for gaseous effluents sample and analyses are reported in Table 2-6.

For each release period, released radioactivity, dose rates, and cumulative doses are calculated. Cumulative dose results are tabulated along with the percent of the ODCM limit for each release, for the current quarter and year.

2.2.2 Total Quantities of Radioactivity, Dose Rates, and Cumulative Doses

The methods for determining release quantities of radioactivity, dose rates, and cumulative doses follow:

2.2.2.1 Fission and Activation Gases

The released radioactivity is determined using sample analyses results collected as described above and the average release flow rates over the period represented by the collected sample.

Dose rates due to noble gases, radioiodines, tritium, and particulates are calculated (with computer assistance). The calculated dose rates are compared to the dose rate limits specified in ODCM 3.1.2 for noble gases, radioiodine, tritium, and particulates. Dose rate calculation methodology is presented in the ODCM.

Beta and gamma air doses due to noble gases are calculated for the location in the unrestricted area with the potential for the highest exposure due to gaseous releases. Air doses are calculated for each release period and cumulative totals are kept for each unit for the calendar quarter and year. Cumulative air doses are compared to the dose limits specified in ODCM 3.1.3. The current percent of the ODCM limits are shown on the printout for each release period. Air dose calculation methodology is presented in the ODCM.

2.2.2.2 Radioiodine, Tritium and Particulate Releases

Released quantities of radioiodines are determined using the weekly samples and release flow rates for the four release points. Radioiodine concentrations are determined by gamma spectroscopy.

Release quantities of particulates are determined using the weekly (filter) samples and release flow rates for the four release points. Gamma spectroscopy is used to quantify concentrations of principal gamma emitters.

After each quarter, the particulate filters from each vent are combined, fused, and a strontium separation is performed. Since sample flows and vent flows are almost constant over each quarterly period the filters from each vent can be dissolved together. Decay corrections are performed back to the middle of the quarterly collection period. If Sr-89 or Sr-90 is not detected, MDC's are calculated. Strontium concentrations are input into the composite file of the computer and used for release dose rate and dose calculations for a Member of the Public.

Tritium samples are obtained monthly from each vent by passing the sample stream through a cold trap. The grams of water vapor/cubic foot is measured upstream of the cold trap in order to alleviate the difficulties in determining water vapor collection efficiencies. The tritium samples are analyzed by an independent laboratory and the results are furnished in uCi/ml of water. The tritium concentration in water is converted to the tritium concentration in air and this value is input into the composite file of the computer and used in release, dose rate, and individual dose calculations.

Dose rates due to radioiodine, tritium and particulates are calculated for a hypothetical child exposed to the inhalation pathway at the location in the unrestricted area where the potential dose rate is expected to be the highest. Dose rates are calculated, for each release point for each release period, and the dose rates from each release point are compared to the dose rate limits as described in ODCM 3.1.2 Doses due to radioiodine, tritium and particulates are calculated for the controlling receptor, which is described in the ODCM. Doses to a Member of the Public are calculated for each release period, and cumulative totals are kept for each unit, for the current calendar quarter and year. Cumulative doses are compared to the dose limits specified in ODCM 3.1.4. The current percent of ODCM limits are shown on the printout for each release period.

2.2.2.3 Gross Alpha Release

The gross alpha release is computed each month by counting the particulate filters, for each week for gross alpha activity in a proportional counter. The four or five weeks' numbers are then recorded on a data sheet and the activity is summed at the end of the month. The summed activity is then divided by the total monthly volume to determine the concentration. This concentration is input into the composite file of the computer and used for release calculations.

2.2.3 Total Error Estimation

The total or maximum error associated with the effluent measurement will include the cumulative errors resulting from the total process of sampling and measurement. Due to the difficulty with assigning error terms for each parameter affecting the final measurement, detailed statistical evaluation of error is not suggested. The objective is to obtain an overall estimate of the error associated with measurements of radioactive materials released in liquid and gaseous effluents and solid waste.

Estimated errors are associated with counting equipment calibration, counting statistics, vent-flow rates, vent sample flow rates, non steady release rates, chemical yield factors and sample losses for such items as charcoal cartridges.

Fission and activation total release was calculated from sample analysis results and release point flow rates.

Statistical error	60%
Counting equipment calibration	10%
Vent flow rates	10%
Non-steady release rates	20%
TOTAL ERROR	65%

I-131 releases were calculated from each weekly sample.

Statistical error	60%
Counting equipment calibration	10%
Vent flow rates	10%
Vent sample flow rates	10%
Non-steady release rates	10%
Losses from charcoal cartridges	10%
TOTAL ERROR	64%

Particulates with half lives greater than 8 days releases were calculated from sample analysis results and release point flow rates.

Statistical error	60%
Counting equipment calibration	10%
Vent flow rates	10%
Vent sample flow rates	10%
Non-steady release rates	10%
TOTAL ERROR	63%

Total tritium releases were calculated from sample analysis results and release point flow rates.

Water vapor in sample stream determination	20%
Vent flow rates	10%
Counting calibration and statistics	10%
Non-steady release rates	50%
TOTAL ERROR	56%

Gross Alpha radioactivity was calculated from sample analysis results and release point flow rates.

Statistical error	60%
Counting equipment calibration	10%
Vent flow rates	10%
Vent sample flow rates	10%
Non-steady release rates	10%
TOTAL ERROR	63%

2.3 *Gaseous Effluent Release Data*

Regulatory Guide 1.21 Tables 1A, 1B, and 1C are found in this report as Tables 2-1A, 2-1B, 2-1C, 2-2A, 2-2B, 2-2C, 2-3A, 2-3B, 2-3C. Data is presented on a quarterly basis as required by Regulatory Guide 1.21 for all quarters.

To complete table 2-1A, 2-1B, and 2-1C, total release for each of the four categories (fission and activation gases, iodines, particulates, and tritium) was divided by the number of seconds in the quarter to obtain a release rate in uCi/second for each category for each quarter. However, the percent of the ODCM limits are not applicable because we have no curie limits for gaseous releases. Applicable limits are expressed in terms of dose. Noble gases are limited as specified in ODCM 3.1.2. The other three categories (tritium, radioiodines, and particulates) are limited as a group as specified in ODCM 3.1.2.

Dose rates due to noble gas releases and due to radioiodine, tritium, and particulates were calculated as part of the pre-release and post-release permits on individual permits. No limits were exceeded for this reporting period.

Gross alpha radioactivity is reported in Table 2-1A, 2-1B, and 2-1C, as curies released in each quarter.

Limits for cumulative beta and gamma air doses due to noble gases are specified in ODCM 3.1.3. Cumulative air doses are presented in Table 2-4A and 2-4B, along with percent of ODCM limits.

Limits for cumulative doses to a Member of the Public due to radioiodine, tritium and particulates, are specified in ODCM 3.1.4. Cumulative doses to a Member of the Public doses are presented in Table 2-5A, and 2-5B, along with percent of ODCM limits.

2.4 *Radiological Impact Due to Gaseous Releases*

Dose rates due to noble gas release were calculated for the site in accordance with ODCM 3.1.2. Dose rates due to radioiodine, tritium, and particulates in gaseous releases were calculated in accordance with ODCM 3.1.2.

These dose rates were calculated as part of the pre-release and post release on individual release permits. No limits were exceeded for this reporting period.

Cumulative air doses due to noble gas releases were calculated for each unit in accordance with ODCM 3.1.3. These results are presented in Tables 2-4A and 2-4B.

Cumulative doses to a Member of the Public due to radioiodine, tritium and particulates in gaseous releases were calculated for each unit in accordance with ODCM 3.1.4. These results are presented in Tables 2-5A and 2-5B.

Dose rates and doses were calculated using the methodology presented in the ODCM.

2.5 *Gaseous Effluents - Batch Releases*

There are no gaseous batch releases from Plant Hatch.

2.6 *Gaseous Effluents - Abnormal Releases*

There were no unplanned or uncontrolled gaseous releases during this reporting period.

Table 2-1A

Hatch Nuclear Plant

RADIOACTIVE EFFLUENT RELEASE REPORT - 2015

Gaseous Effluents - Summation Of All Releases

Unit: 1

Starting: 1-Jan-2015 Ending: 31-Dec-2015

Type of Effluent	Units	1ST Quarter	2ND Quarter	3RD Quarter	4TH Quarter
A. Fission And Activation Gases					
1. Total Release	Curies	4.97E-01	2.47E+00	8.15E-01	8.66E-01
2. Average Release rate for period	uCi/sec	6.30E-02	3.13E-01	1.03E-01	1.10E-01
3. Percent of Applicable Limit	%	*	*	*	*
B. Radioiodines					
1. Total Iodine-131	Curies	2.57E-04	2.26E-05	2.63E-05	2.28E-05
2. Average Release rate for period	uCi/sec	3.26E-05	2.87E-06	3.33E-06	2.89E-06
3. Percent of Applicable Limit	%	*	*	*	*
C. Particulates					
1. Particulates (Half-Lives > 8 Days)	Curies	2.11E-05	3.90E-06	2.75E-06	3.08E-06
2. Average Release rate for period	uCi/sec	2.67E-06	4.95E-07	3.48E-07	3.901E-07
3. Percent of Applicable Limit	%	*	*	*	*
D. Tritium					
1. Total Release	Curies	2.29E+00	1.86E+00	2.90E+00	2.43E+00
2. Average Release rate for period	uCi/sec	2.91E-01	2.37E-01	3.67E-01	3.08E-01
3. Percent of Applicable Limit	%	*	*	*	*
E. Gross Alpha					
1. Total Release	Curies	0.00E+00	0.00E+00	0.00E+00	0.00E+00
2. Average Release rate for period	uCi/sec	0.00E+00	0.00E+00	0.00E+00	0.00E+00

* Applicable limits are expressed in terms of dose. See Tables 2-4A, 2-4B, 2-5A, 2-5B of this report.

Table 2-1B

Hatch Nuclear Plant

RADIOACTIVE EFFLUENT RELEASE REPORT - 2015

Gaseous Effluents - Summation Of All Releases

Unit: 2

Starting: 1-Jan-2015 Ending: 31-Dec-2015

Type of Effluent	Units	1ST Quarter	2ND Quarter	3RD Quarter	4TH Quarter
A. Fission And Activation Gases					
1. Total Release	Curies	4.97E-01	2.47E+00	8.15E-01	8.66E-01
2. Average Release rate for period	uCi/sec	6.30E-02	3.13E-01	1.03E-01	1.10E-01
3. Percent of Applicable Limit	%	*	*	*	*
B. Radioiodines					
1. Total Iodine-131	Curies	2.28E-04	2.35E-05	3.33E-05	2.47E-05
2. Average Release rate for period	uCi/sec	2.89E-05	2.98E-06	4.22E-06	3.13E-06
3. Percent of Applicable Limit	%	*	*	*	*
C. Particulates					
1. Particulates (Half-Lives > 8 Days)	Curies	8.86E-06	5.13E-06	4.75E-06	3.81E-06
2. Average Release rate for period	uCi/sec	1.12E-06	6.51E-07	6.03E-07	4.836E-07
3. Percent of Applicable Limit	%	*	*	*	*
D. Tritium					
1. Total Release	Curies	1.79E+00	2.06E+00	2.80E+00	2.73E+00
2. Average Release rate for period	uCi/sec	2.27E-01	2.62E-01	3.56E-01	3.47E-01
3. Percent of Applicable Limit	%	*	*	*	*
E. Gross Alpha					
1. Total Release	Curies	0.00E+00	0.00E+00	0.00E+00	0.00E+00
2. Average Release rate for period	uCi/sec	0.00E+00	0.00E+00	0.00E+00	0.00E+00

* Applicable limits are expressed in terms of dose. See Tables 2-4A, 2-4B, 2-5A, 2-5B of this report.

Table 2-1C

Hatch Nuclear Plant

RADIOACTIVE EFFLUENT RELEASE REPORT - 2015

Gaseous Effluents - Summation Of All Releases

Unit: Site

Starting: 1-Jan-2015 Ending: 31-Dec-2015

Type of Effluent	Units	1ST Quarter	2ND Quarter	3RD Quarter	4TH Quarter
A. Fission And Activation Gases					
1. Total Release	Curies	9.93E-01	4.93E+00	1.63E+00	1.73E+00
2. Average Release rate for period	uCi/sec	1.26E-01	6.25E-01	2.07E-01	2.20E-01
3. Percent of Applicable Limit	%	*	*	*	*
B. Radioiodines					
1. Total Iodine-131	Curies	4.85E-04	4.61E-05	5.96E-05	4.75E-05
2. Average Release rate for period	uCi/sec	6.16E-05	5.85E-06	7.55E-06	6.03E-06
3. Percent of Applicable Limit	%	*	*	*	*
C. Particulates					
1. Particulates (Half-Lives > 8 Days)	Curies	2.99E-05	9.03E-06	7.50E-06	6.89E-06
2. Average Release rate for period	uCi/sec	3.80E-06	1.15E-06	9.51E-07	8.737E-07
3. Percent of Applicable Limit	%	*	*	*	*
D. Tritium					
1. Total Release	Curies	4.08E+00	3.93E+00	5.70E+00	5.16E+00
2. Average Release rate for period	uCi/sec	5.18E-01	4.98E-01	7.23E-01	6.55E-01
3. Percent of Applicable Limit	%	*	*	*	*
E. Gross Alpha					
1. Total Release	Curies	0.00E+00	0.00E+00	0.00E+00	0.00E+00
2. Average Release rate for period	uCi/sec	0.00E+00	0.00E+00	0.00E+00	0.00E+00

* Applicable limits are expressed in terms of dose. See Tables 2-4A, 2-4B, 2-5A, 2-5B of this report.

Table 2-2A

Hatch Nuclear Plant
RADIOACTIVE EFFLUENT RELEASE REPORT - 2015
Gaseous Effluents - Elevated Level Releases
Unit: 1
Starting: 1-Jan- 2015 Ending: 31-Dec-2015

		Continuous Mode			
Nuclides Released	**Unit**	**1ST Quarter**	**2ND Quarter**	**3RD Quarter**	**4TH Quarter**
Fission Gases					
Ar-41	Curies	4.97E-01	2.19E+00	6.41E-01	7.62E-01
Kr-85M	Curies	0.00E+00	0.00E+00	1.07E-01	1.48E-02
Xe-133	Curies	0.00E+00	1.69E-01	4.13E-02	0.00E+00
Xe-135	Curies	0.00E+00	1.04E-01	2.55E-02	8.86E-02
Total For Period	**Curies**	**4.97E-01**	**2.47E+00**	**8.15E-01**	**8.66E-01**
Iodines					
I-131	Curies	8.66E-05	7.67E-06	8.93E-06	8.10E-06
I-133	Curies	1.71E-04	1.49E-05	1.73E-05	1.47E-05
Total For Period	**Curies**	**2.57E-04**	**2.26E-05**	**2.63E-05**	**2.28E-05**
Particulates					
Mn-54	Curies	4.83E-08	0.00E+00	0.00E+00	0.00E+00
Co-60	Curies	5.73E-08	0.00E+00	6.16E-08	0.00E+00
Sr-89	Curies	1.04E-05	2.43E-06	2.35E-06	1.75E-06
Sr-90	Curies	1.02E-07	0.00E+00	3.19E-08	0.00E+00
Cs-137	Curies	3.86E-08	1.14E-08	0.00E+00	0.00E+00
Ba-140	Curies	2.42E-06	3.00E-07	3.03E-07	0.00E+00
Total For Period	**Curies**	**1.31E-05**	**2.74E-06**	**2.75E-06**	**1.75E-06**
Tritium					
H-3	Curies	2.21E-01	1.42E-01	2.97E-01	2.03E-01

If Not Detected, Nuclide is Not Reported. Zeroes in this table indicates that no radioactivity was present at detectable levels.
See Table 2-6 for typical minimum detectable concentrations.

Table 2-2A

Hatch Nuclear Plant

RADIOACTIVE EFFLUENT RELEASE REPORT - 2015

Gaseous Effluents - Elevated Level Releases

Unit: 1

Starting: 1-Jan- 2015 Ending: 31-Dec-2015

		Continuous Mode			
Nuclides Released	**Unit**	**1ST Quarter**	**2ND Quarter**	**3RD Quarter**	**4TH Quarter**
Gross Alpha					
No Nuclides Found	Curies	0.00E+00	0.00E+00	0.00E+00	0.00E+00

If Not Detected, Nuclide is Not Reported. Zeroes in this table indicates that no radioactivity was present at detectable levels.
See Table 2-6 for typical minimum detectable concentrations.

Table 2-2A

Hatch Nuclear Plant

RADIOACTIVE EFFLUENT RELEASE REPORT - 2015

Gaseous Effluents - Elevated Level Releases

Unit: 1

Starting: 1-Jan- 2015 Ending: 31-Dec-2015

		Batch Mode			
Nuclides Released	**Unit**	**1ST Quarter**	**2ND Quarter**	**3RD Quarter**	**4TH Quarter**
Fission Gases					
No Nuclides Found	Curies	0.00E+00	0.00E+00	0.00E+00	0.00E+00
Iodines					
No Nuclides Found	Curies	0.00E+00	0.00E+00	0.00E+00	0.00E+00
Particulates					
No Nuclides Found	Curies	0.00E+00	0.00E+00	0.00E+00	0.00E+00
Tritium					
No Nuclides Found	Curies	0.00E+00	0.00E+00	0.00E+00	0.00E+00
Gross Alpha					
No Nuclides Found	Curies	0.00E+00	0.00E+00	0.00E+00	0.00E+00

If Not Detected, Nuclide is Not Reported. Zeroes in this table indicates that no radioactivity was present at detectable levels.
See Table 2-6 for typical minimum detectable concentrations.

Table 2-2B

Hatch Nuclear Plant

RADIOACTIVE EFFLUENT RELEASE REPORT - 2015

Gaseous Effluents - Elevated Level Releases

Unit: 2

Starting: 1-Jan- 2015 Ending: 31-Dec-2015

		Continuous Mode			
Nuclides Released	**Unit**	**1ST Quarter**	**2ND Quarter**	**3RD Quarter**	**4TH Quarter**
Fission Gases					
Ar-41	Curies	4.97E-01	2.19E+00	6.41E-01	7.62E-01
Kr-85M	Curies	0.00E+00	0.00E+00	1.07E-01	1.48E-02
Xe-133	Curies	0.00E+00	1.69E-01	4.13E-02	0.00E+00
Xe-135	Curies	0.00E+00	1.04E-01	2.55E-02	8.86E-02
Total For Period	**Curies**	**4.97E-01**	**2.47E+00**	**8.15E-01**	**8.66E-01**
Iodines					
I-131	Curies	5.64E-05	7.67E-06	8.93E-06	8.10E-06
I-133	Curies	1.56E-04	1.49E-05	1.73E-05	1.47E-05
Total For Period	**Curies**	**2.12E-04**	**2.26E-05**	**2.63E-05**	**2.28E-05**
Particulates					
Mn-54	Curies	4.83E-08	0.00E+00	0.00E+00	0.00E+00
Co-60	Curies	5.73E-08	0.00E+00	6.16E-08	0.00E+00
Sr-89	Curies	4.48E-06	2.43E-06	2.35E-06	1.75E-06
Sr-90	Curies	4.42E-08	0.00E+00	3.19E-08	0.00E+00
Cs-137	Curies	8.91E-09	1.14E-08	0.00E+00	0.00E+00
Ba-140	Curies	1.81E-06	3.00E-07	3.03E-07	0.00E+00
Total For Period	**Curies**	**6.45E-06**	**2.74E-06**	**2.75E-06**	**1.75E-06**
Tritium					
H-3	Curies	6.89E-02	1.42E-01	2.97E-01	2.03E-01

If Not Detected, Nuclide is Not Reported. Zeroes in this table indicates that no radioactivity was present at detectable levels.
See Table 2-6 for typical minimum detectable concentrations.

Table 2-2B

Hatch Nuclear Plant

RADIOACTIVE EFFLUENT RELEASE REPORT - 2015

Gaseous Effluents - Elevated Level Releases

Unit: 2

Starting: 1-Jan- 2015 Ending: 31-Dec-2015

		Continuous Mode			
Nuclides Released	**Unit**	**1ST Quarter**	**2ND Quarter**	**3RD Quarter**	**4TH Quarter**
Gross Alpha					
No Nuclides Found	Curies	0.00E+00	0.00E+00	0.00E+00	0.00E+00

If Not Detected, Nuclide is Not Reported. Zeroes in this table indicates that no radioactivity was present at detectable levels.
See Table 2-6 for typical minimum detectable concentrations.

Table 2-2B

Hatch Nuclear Plant

RADIOACTIVE EFFLUENT RELEASE REPORT - 2015

Gaseous Effluents - Elevated Level Releases

Unit: 2

Starting: 1-Jan- 2015 Ending: 31-Dec-2015

		Batch Mode			
Nuclides Released	**Unit**	**1ST Quarter**	**2ND Quarter**	**3RD Quarter**	**4TH Quarter**
Fission Gases					
No Nuclides Found	Curies	0.00E+00	0.00E+00	0.00E+00	0.00E+00
Iodines					
No Nuclides Found	Curies	0.00E+00	0.00E+00	0.00E+00	0.00E+00
Particulates					
No Nuclides Found	Curies	0.00E+00	0.00E+00	0.00E+00	0.00E+00
Tritium					
No Nuclides Found	Curies	0.00E+00	0.00E+00	0.00E+00	0.00E+00
Gross Alpha					
No Nuclides Found	Curies	0.00E+00	0.00E+00	0.00E+00	0.00E+00

If Not Detected, Nuclide is Not Reported. Zeroes in this table indicates that no radioactivity was present at detectable levels.
See Table 2-6 for typical minimum detectable concentrations.

Table 2-2C

Hatch Nuclear Plant

RADIOACTIVE EFFLUENT RELEASE REPORT - 2015

Gaseous Effluents - Elevated Level Releases

Unit: Site

Starting: 1-Jan- 2015 Ending: 31-Dec-2015

		Continuous Mode			
Nuclides Released	**Unit**	**1ST Quarter**	**2ND Quarter**	**3RD Quarter**	**4TH Quarter**
Fission Gases					
Ar-41	Curies	9.93E-01	4.38E+00	1.28E+00	1.52E+00
Kr-85M	Curies	0.00E+00	0.00E+00	2.15E-01	2.96E-02
Xe-133	Curies	0.00E+00	3.39E-01	8.27E-02	0.00E+00
Xe-135	Curies	0.00E+00	2.09E-01	5.10E-02	1.77E-01
Total For Period	**Curies**	**9.93E-01**	**4.93E+00**	**1.63E+00**	**1.73E+00**
Iodines					
I-131	Curies	1.43E-04	1.53E-05	1.79E-05	1.62E-05
I-133	Curies	3.26E-04	2.98E-05	3.46E-05	2.94E-05
Total For Period	**Curies**	**4.69E-04**	**4.52E-05**	**5.25E-05**	**4.56E-05**
Particulates					
Mn-54	Curies	9.66E-08	0.00E+00	0.00E+00	0.00E+00
Co-60	Curies	1.15E-07	0.00E+00	1.23E-07	0.00E+00
Sr-89	Curies	1.49E-05	4.86E-06	4.70E-06	3.50E-06
Sr-90	Curies	1.47E-07	0.00E+00	6.38E-08	0.00E+00
Cs-137	Curies	4.75E-08	2.27E-08	0.00E+00	0.00E+00
Ba-140	Curies	4.23E-06	6.00E-07	6.06E-07	0.00E+00
Total For Period	**Curies**	**1.95E-05**	**5.48E-06**	**5.49E-06**	**3.50E-06**
Tritium					
H-3	Curies	2.89E-01	2.85E-01	5.93E-01	4.06E-01

If Not Detected, Nuclide is Not Reported. Zeroes in this table indicates that no radioactivity was present at detectable levels.
See Table 2-6 for typical minimum detectable concentrations.

Table 2-2C

Hatch Nuclear Plant

RADIOACTIVE EFFLUENT RELEASE REPORT - 2015

Gaseous Effluents - Elevated Level Releases

Unit: Site

Starting: 1-Jan- 2015 Ending: 31-Dec-2015

		Continuous Mode			
Nuclides Released	**Unit**	**1ST Quarter**	**2ND Quarter**	**3RD Quarter**	**4TH Quarter**
Gross Alpha					
No Nuclides Found	Curies	0.00E+00	0.00E+00	0.00E+00	0.00E+00

If Not Detected, Nuclide is Not Reported. Zeroes in this table indicates that no radioactivity was present at detectable levels.
See Table 2-6 for typical minimum detectable concentrations.

Table 2-2C

Hatch Nuclear Plant

RADIOACTIVE EFFLUENT RELEASE REPORT - 2015

Gaseous Effluents - Elevated Level Releases

Unit: Site

Starting: 1-Jan- 2015 Ending: 31-Dec-2015

		Batch Mode			
Nuclides Released	**Unit**	**1ST Quarter**	**2ND Quarter**	**3RD Quarter**	**4TH Quarter**
Fission Gases					
No Nuclides Found	Curies	0.00E+00	0.00E+00	0.00E+00	0.00E+00
Iodines					
No Nuclides Found	Curies	0.00E+00	0.00E+00	0.00E+00	0.00E+00
Particulates					
No Nuclides Found	Curies	0.00E+00	0.00E+00	0.00E+00	0.00E+00
Tritium					
No Nuclides Found	Curies	0.00E+00	0.00E+00	0.00E+00	0.00E+00
Gross Alpha					
No Nuclides Found	Curies	0.00E+00	0.00E+00	0.00E+00	0.00E+00

If Not Detected, Nuclide is Not Reported. Zeroes in this table indicates that no radioactivity was present at detectable levels.
See Table 2-6 for typical minimum detectable concentrations.

Table 2-3A

Hatch Nuclear Plant
RADIOACTIVE EFFLUENT RELEASE REPORT - 2015
Gaseous Effluents - Ground Level Releases
Unit: 1
Starting: 1-Jan-2015 Ending: 31-Dec-2015

		Continuous Mode			
Nuclides Released	**Unit**	**1ST Quarter**	**2ND Quarter**	**3RD Quarter**	**4TH Quarter**
Fission Gases					
No Nuclides Found	Curies	0.00E+00	0.00E+00	0.00E+00	0.00E+00
Iodines					
No Nuclides Found	Curies	0.00E+00	0.00E+00	0.00E+00	0.00E+00
Particulates					
Mn-54	Curies	0.00E+00	0.00E+00	0.00E+00	1.33E-06
Co-60	Curies	7.09E-06	0.00E+00	0.00E+00	0.00E+00
Sr-89	Curies	9.21E-07	1.16E-06	0.00E+00	0.00E+00
Sr-90	Curies	0.00E+00	0.00E+00	3.68E-10	2.67E-10
Total For Period	**Curies**	**8.01E-06**	**1.16E-06**	**3.68E-10**	**1.33E-06**
Tritium					
H-3	Curies	2.07E+00	1.72E+00	2.60E+00	2.23E+00
Gross Alpha					
No Nuclides Found	Curies	0.00E+00	0.00E+00	0.00E+00	0.00E+00

If Not Detected, Nuclide is Not Reported. Zeroes in this table indicates that no radioactivity was present at detectable levels.
See Table 2-6 for typical minimum detectable concentrations.

Table 2-3A

Hatch Nuclear Plant

RADIOACTIVE EFFLUENT RELEASE REPORT - 2015

Gaseous Effluents - Ground Level Releases

Unit: 1

Starting: 1-Jan-2015 Ending: 31-Dec-2015

		Batch Mode			
Nuclides Released	**Unit**	**1ST Quarter**	**2ND Quarter**	**3RD Quarter**	**4TH Quarter**
Fission Gases					
No Nuclides Found	Curies	0.00E+00	0.00E+00	0.00E+00	0.00E+00
Iodines					
No Nuclides Found	Curies	0.00E+00	0.00E+00	0.00E+00	0.00E+00
Particulates					
No Nuclides Found	Curies	0.00E+00	0.00E+00	0.00E+00	0.00E+00
Tritium					
No Nuclides Found	Curies	0.00E+00	0.00E+00	0.00E+00	0.00E+00
Gross Alpha					
No Nuclides Found	Curies	0.00E+00	0.00E+00	0.00E+00	0.00E+00

If Not Detected, Nuclide is Not Reported. Zeroes in this table indicates that no radioactivity was present at detectable levels.
See Table 2-6 for typical minimum detectable concentrations.

Table 2-3B

Hatch Nuclear Plant
RADIOACTIVE EFFLUENT RELEASE REPORT - 2015
Gaseous Effluents - Ground Level Releases
Unit: 2
Starting: 1-Jan-2015 Ending: 31-Dec-2015

		Continuous Mode			
Nuclides Released	**Unit**	**1ST Quarter**	**2ND Quarter**	**3RD Quarter**	**4TH Quarter**
Fission Gases					
No Nuclides Found	Curies	0.00E+00	0.00E+00	0.00E+00	0.00E+00
Iodines					
I-131	Curies	1.02E-05	9.15E-07	1.27E-06	1.89E-06
I-133	Curies	5.91E-06	0.00E+00	5.78E-06	0.00E+00
Total For Period	**Curies**	**1.61E-05**	**9.15E-07**	**7.05E-06**	**1.89E-06**
Particulates					
Sr-89	Curies	2.29E-06	2.27E-06	2.00E-06	2.06E-06
Sr-90	Curies	1.17E-07	1.21E-07	0.00E+00	0.00E+00
Total For Period	**Curies**	**2.41E-06**	**2.39E-06**	**2.00E-06**	**2.06E-06**
Tritium					
H-3	Curies	1.72E+00	1.92E+00	2.51E+00	2.53E+00
Gross Alpha					
No Nuclides Found	Curies	0.00E+00	0.00E+00	0.00E+00	0.00E+00

If Not Detected, Nuclide is Not Reported. Zeroes in this table indicates that no radioactivity was present at detectable levels.
See Table 2-6 for typical minimum detectable concentrations.

Table 2-3B

Hatch Nuclear Plant

RADIOACTIVE EFFLUENT RELEASE REPORT - 2015

Gaseous Effluents - Ground Level Releases

Unit: 2

Starting: 1-Jan-2015 Ending: 31-Dec-2015

		Batch Mode			
Nuclides Released	**Unit**	**1ST Quarter**	**2ND Quarter**	**3RD Quarter**	**4TH Quarter**
Fission Gases					
No Nuclides Found	Curies	0.00E+00	0.00E+00	0.00E+00	0.00E+00
Iodines					
No Nuclides Found	Curies	0.00E+00	0.00E+00	0.00E+00	0.00E+00
Particulates					
No Nuclides Found	Curies	0.00E+00	0.00E+00	0.00E+00	0.00E+00
Tritium					
No Nuclides Found	Curies	0.00E+00	0.00E+00	0.00E+00	0.00E+00
Gross Alpha					
No Nuclides Found	Curies	0.00E+00	0.00E+00	0.00E+00	0.00E+00

If Not Detected, Nuclide is Not Reported. Zeroes in this table indicates that no radioactivity was present at detectable levels.
See Table 2-6 for typical minimum detectable concentrations.

Table 2-3C

Hatch Nuclear Plant

RADIOACTIVE EFFLUENT RELEASE REPORT - 2015

Gaseous Effluents - Ground Level Releases

Unit: Site

Starting: 1-Jan-2015 Ending: 31-Dec-2015

		Continuous Mode			
Nuclides Released	**Unit**	**1ST Quarter**	**2ND Quarter**	**3RD Quarter**	**4TH Quarter**
Fission Gases					
No Nuclides Found	Curies	0.00E+00	0.00E+00	0.00E+00	0.00E+00
Iodines					
I-131	Curies	1.02E-05	9.15E-07	1.27E-06	1.89E-06
I-133	Curies	5.91E-06	0.00E+00	5.78E-06	0.00E+00
Total For Period	**Curies**	**1.61E-05**	**9.15E-07**	**7.05E-06**	**1.89E-06**
Particulates					
Mn-54	Curies	0.00E+00	0.00E+00	0.00E+00	1.33E-06
Co-60	Curies	7.09E-06	0.00E+00	0.00E+00	0.00E+00
Sr-89	Curies	3.21E-06	3.43E-06	2.00E-06	2.06E-06
Sr-90	Curies	1.17E-07	1.21E-07	3.68E-10	2.67E-10
Total For Period	**Curies**	**1.04E-05**	**3.55E-06**	**2.00E-06**	**3.39E-06**
Tritium					
H-3	Curies	3.80E+00	3.64E+00	5.11E+00	4.75E+00
Gross Alpha					
No Nuclides Found	Curies	0.00E+00	0.00E+00	0.00E+00	0.00E+00

If Not Detected, Nuclide is Not Reported. Zeroes in this table indicates that no radioactivity was present at detectable levels.
See Table 2-6 for typical minimum detectable concentrations.

Table 2-3C

Hatch Nuclear Plant

RADIOACTIVE EFFLUENT RELEASE REPORT - 2015

Gaseous Effluents - Ground Level Releases

Unit: Site

Starting: 1-Jan-2015 Ending: 31-Dec-2015

		Batch Mode			
Nuclides Released	**Unit**	**1ST Quarter**	**2ND Quarter**	**3RD Quarter**	**4TH Quarter**
Fission Gases					
No Nuclides Found	Curies	0.00E+00	0.00E+00	0.00E+00	0.00E+00
Iodines					
No Nuclides Found	Curies	0.00E+00	0.00E+00	0.00E+00	0.00E+00
Particulates					
No Nuclides Found	Curies	0.00E+00	0.00E+00	0.00E+00	0.00E+00
Tritium					
No Nuclides Found	Curies	0.00E+00	0.00E+00	0.00E+00	0.00E+00
Gross Alpha					
No Nuclides Found	Curies	0.00E+00	0.00E+00	0.00E+00	0.00E+00

If Not Detected, Nuclide is Not Reported. Zeroes in this table indicates that no radioactivity was present at detectable levels.
See Table 2-6 for typical minimum detectable concentrations.

Table 2-4A

Hatch Nuclear Plant

RADIOACTIVE EFFLUENT RELEASE REPORT - 2015

Air Doses Due to Gaseous Releases

Unit: 1

Starting: 1-Jan-2015 Ending: 31-Dec-2015

Cumulative Doses Per Quarter

Type of Radiation	ODCM Lmt	Units	1ST Qtr	% ODCM	2ND Qtr	% ODCM	3RD Qtr	% ODCM	4TH Qtr	% ODCM
Gamma Air	5.00E+00	mRad	1.22E-05	2.43E-04	5.42E-05	1.08E-03	1.61E-05	3.22E-04	1.91E-05	3.82E-04
Beta Air	1.00E+01	mRad	3.37E-06	3.37E-05	1.58E-05	1.58E-04	5.01E-06	5.01E-05	5.69E-06	5.69E-05

Cumulative Doses Per Year

Type of Radiation	ODCM Lmt	Units	Year to End Date	% ODCM	Receptor	Limit
Gamma Air	1.00E+01	mRad	1.02E-04	1.02E-03	SITE BOUNDARY / Child	Ann Cum Gamma Airdose
Beta Air	2.00E+01	mRad	2.99E-05	1.49E-04	MAX IND. AIRBORNE / Child	Ann Cum Beta Airdose

* Applicable limits are expressed in terms of dose. See Tables 1-3A and 1-3B of this report.

Table 2-4B

Hatch Nuclear Plant

RADIOACTIVE EFFLUENT RELEASE REPORT - 2015

Air Doses Due to Gaseous Releases

Unit: 2

Starting: 1-Jan-2015 Ending: 31-Dec-2015

Cumulative Doses Per Quarter

Type of Radiation	ODCM Lmt	Units	1ST Qtr	% ODCM	2ND Qtr	% ODCM	3RD Qtr	% ODCM	4TH Qtr	% ODCM
Gamma Air	5.00E+00	mRad	1.22E-05	2.43E-04	5.42E-05	1.08E-03	1.61E-05	3.22E-04	1.91E-05	3.82E-04
Beta Air	1.00E+01	mRad	3.37E-06	3.37E-05	1.58E-05	1.58E-04	5.01E-06	5.01E-05	5.69E-06	5.69E-05

Cumulative Doses Per Year

Type of Radiation	ODCM Lmt	Units	Year to End Date	% ODCM	Receptor	Limit
Gamma Air	1.00E+01	mRad	1.02E-04	1.02E-03	SITE BOUNDARY / Child	Ann Cum Gamma Airdose
Beta Air	2.00E+01	mRad	2.99E-05	1.49E-04	MAX IND. AIRBORNE / Child	Ann Cum Beta Airdose

* Applicable limits are expressed in terms of dose. See Tables 1-3A and 1-3B of this report.

Table 2-5A

Hatch Nuclear Plant

RADIOACTIVE EFFLUENT RELEASE REPORT - 2015

Doses To A Member Of The Public Due To Radioiodines, Tritium, and Particulates in Gaseous Releases

Unit: 1

Starting: 1-Jan-2015 Ending: 31-Dec-2015

Cumulative Doses Per Quarter

Organ	ODCM Lmt	Units	1ST Qtr	% ODCM	2ND Qtr	% ODCM	3RD Qtr	% ODCM	4TH Qtr	% ODCM
GI-Lli	7.50E+00	mRem	1.12E-03	1.50E-02	8.94E-04	1.19E-02	1.35E-03	1.80E-02	1.16E-03	1.54E-02
Kidney	7.50E+00	mRem	1.12E-03	1.49E-02	8.93E-04	1.19E-02	1.35E-03	1.80E-02	1.15E-03	1.54E-02
Lung	7.50E+00	mRem	1.12E-03	1.50E-02	8.94E-04	1.19E-02	1.35E-03	1.80E-02	1.15E-03	1.54E-02
Bone	7.50E+00	mRem	7.45E-05	9.93E-04	1.56E-05	2.08E-04	5.75E-06	7.67E-05	3.46E-06	4.61E-05
Liver	7.50E+00	mRem	1.12E-03	1.49E-02	8.93E-04	1.19E-02	1.35E-03	1.80E-02	1.16E-03	1.54E-02
Thyroid	7.50E+00	mRem	1.31E-03	1.74E-02	9.10E-04	1.21E-02	1.37E-03	1.82E-02	1.17E-03	1.56E-02
Total Body	7.50E+00	mRem	1.12E-03	1.50E-02	8.94E-04	1.19E-02	1.35E-03	1.80E-02	1.15E-03	1.54E-02

Cumulative Doses per Year

Organ	ODCM Lmt	Units	Year to Ending Date	% ODCM	Receptor	Limit
Lung	1.500E+01	mRem	4.521E-03	3.014E-02	MAX IND. AIRBORNE / Child	Ann Cum Iod/Part Airdose
Thyroid	1.500E+01	mRem	4.758E-03	3.172E-02	MAX IND. AIRBORNE / Child	Ann Cum Iod/Part Airdose
Liver	1.500E+01	mRem	4.517E-03	3.012E-02	MAX IND. AIRBORNE / Child	Ann Cum Iod/Part Airdose
Total Body	1.500E+01	mRem	4.521E-03	3.014E-02	MAX IND. AIRBORNE / Child	Ann Cum Iod/Part Airdose
Kidney	1.500E+01	mRem	4.517E-03	3.011E-02	MAX IND. AIRBORNE / Child	Ann Cum Iod/Part Airdose
Bone	1.500E+01	mRem	9.934E-05	6.622E-04	MAX IND. AIRBORNE / Child	Ann Cum Iod/Part Airdose
GI-Lli	1.500E+01	mRem	4.523E-03	3.015E-02	MAX IND. AIRBORNE / Child	Ann Cum Iod/Part Airdose

Table 2-5B

Hatch Nuclear Plant

RADIOACTIVE EFFLUENT RELEASE REPORT - 2015

Doses To A Member Of The Public Due To Radioiodines, Tritium, and Particulates in Gaseous Releases

Unit: 2

Starting: 1-Jan-2015 Ending: 31-Dec-2015

Cumulative Doses Per Quarter

Organ	ODCM Lmt	Units	1ST Qtr	% ODCM	2ND Qtr	% ODCM	3RD Qtr	% ODCM	4TH Qtr	% ODCM
Bone	7.50E+00	mRem	7.56E-05	1.01E-03	7.02E-05	9.36E-04	2.59E-05	3.46E-04	2.38E-05	3.17E-04
Lung	7.50E+00	mRem	8.94E-04	1.19E-02	9.97E-04	1.33E-02	1.30E-03	1.74E-02	1.31E-03	1.75E-02
Total Body	7.50E+00	mRem	9.05E-04	1.21E-02	1.01E-03	1.34E-02	1.30E-03	1.74E-02	1.31E-03	1.75E-02
Kidney	7.50E+00	mRem	8.94E-04	1.19E-02	9.97E-04	1.33E-02	1.30E-03	1.74E-02	1.31E-03	1.75E-02
Thyroid	7.50E+00	mRem	1.17E-03	1.56E-02	1.03E-03	1.37E-02	1.34E-03	1.79E-02	1.36E-03	1.81E-02
GI-Lli	7.50E+00	mRem	8.95E-04	1.19E-02	9.99E-04	1.33E-02	1.30E-03	1.74E-02	1.31E-03	1.75E-02
Liver	7.50E+00	mRem	8.94E-04	1.19E-02	9.97E-04	1.33E-02	1.30E-03	1.74E-02	1.31E-03	1.75E-02

Cumulative Doses per Year

Organ	ODCM Lmt	Units	Year to Ending Date	% ODCM	Receptor	Limit
GI-Lli	1.500E+01	mRem	4.510E-03	3.006E-02	MAX IND. AIRBORNE / Child	Ann Cum Iod/Part Airdose
Total Body	1.500E+01	mRem	4.529E-03	3.019E-02	MAX IND. AIRBORNE / Child	Ann Cum Iod/Part Airdose
Kidney	1.500E+01	mRem	4.505E-03	3.003E-02	MAX IND. AIRBORNE / Child	Ann Cum Iod/Part Airdose
Thyroid	1.500E+01	mRem	4.901E-03	3.267E-02	MAX IND. AIRBORNE / Child	Ann Cum Iod/Part Airdose
Lung	1.500E+01	mRem	4.505E-03	3.003E-02	MAX IND. AIRBORNE / Child	Ann Cum Iod/Part Airdose
Bone	1.500E+01	mRem	1.954E-04	1.303E-03	MAX IND. AIRBORNE / Child	Ann Cum Iod/Part Airdose
Liver	1.500E+01	mRem	4.504E-03	3.003E-02	MAX IND. AIRBORNE / Child	Ann Cum Iod/Part Airdose

TABLE 2-6
E. I. HATCH NUCLEAR PLANT RADIOACTIVE
EFFLUENT RELEASE REPORT – 2015
MINIMUM DETECTABLE CONCENTRATIONS - GASEOUS SAMPLE ANALYSES
STARTING: 1-Jan-2015 ENDING: 31-Dec-2015

The values in this table represent a priori Minimum Detectable Concentration (MDC) that are typically achieved in laboratory analyses of gaseous radwaste samples.

RADIONUCLIDE	***MDC***	***UNITS***
Kr-87	2.94E-08	uCi/cc
Kr-88	3.22E-08	uCi/cc
Xe-133	2.30E-08	uCi/cc
Xe-133m	7.30E-08	uCi/cc
Xe-135	8.73E-09	uCi/cc
Xe-138	1.99E-07	uCi/cc
I-131	1.34E-13*	uCi/cc
I-133	1.53E-13*	uCi/cc
Mn-54	1.62E-13*	uCi/cc
Fe-59	3.42E-13*	uCi/cc
Co-58	1.30E-13*	uCi/cc
Co-60	1.54E-13*	uCi/cc
Zn-65	2.54E-13*	uCi/cc
Mo-99	9.61E-13*	uCi/cc
Cs-134	1.42E-13*	uCi/cc
Cs-137	1.28E-13*	uCi/cc
Ce-141	1.26E-13*	uCi/cc
Ce-144	5.64E-13*	uCi/cc
Sr-89	1.10E-16	uCi/cc
Sr-90	6.70E-16	uCi/cc
H-3	4.00E-07	uCi/cc

** Based on an estimated sample quantity of 4.078E+07 cc's.*

Table 2-7A

Hatch Nuclear Plant

RADIOACTIVE EFFLUENT RELEASE REPORT - 2015

Gaseous Effluents - Batch Release Summary

Unit: 1

Starting: 1-Jan-2015 Ending: 31-Dec-2015

Gaseous Releases	Units	1ST Quarter	2ND Quarter	3RD Quarter	4TH Quarter	Year Totals
1. Number of batch releases		0	0	0	0	0
2. Total time period for batch releases	(Minutes)	0.00E+00	0.00E+00	0.00E+00	0.00E+00	0.00E+00
3. Maximum time period for a batch release	(Minutes)	0.00E+00	0.00E+00	0.00E+00	0.00E+00	0.00E+00
4. Average time period for a batch release	(Minutes)	0.00E+00	0.00E+00	0.00E+00	0.00E+00	0.00E+00
5. Minimum time period for a batch release	(Minutes)	0.00E+00	0.00E+00	0.00E+00	0.00E+00	0.00E+00

Table 2-7B

Hatch Nuclear Plant

RADIOACTIVE EFFLUENT RELEASE REPORT - 2015

Gaseous Effluents - Batch Release Summary

Unit: 2

Starting: 1-Jan-2015 Ending: 31-Dec-2015

Gaseous Releases	Units	1ST Quarter	2ND Quarter	3RD Quarter	4TH Quarter	Year Totals
1. Number of batch releases		0	0	0	0	0
2. Total time period for batch releases	(Minutes)	0.00E+00	0.00E+00	0.00E+00	0.00E+00	0.00E+00
3. Maximum time period for a batch release	(Minutes)	0.00E+00	0.00E+00	0.00E+00	0.00E+00	0.00E+00
4. Average time period for a batch release	(Minutes)	0.00E+00	0.00E+00	0.00E+00	0.00E+00	0.00E+00
5. Minimum time period for a batch release	(Minutes)	0.00E+00	0.00E+00	0.00E+00	0.00E+00	0.00E+00

Table 2-8A

Hatch Nuclear Plant

RADIOACTIVE EFFLUENT RELEASE REPORT - 2015

Gaseous Effluents - Abnormal Release Summary

Unit: 1

Starting: 1-Jan-2015 Ending: 31-Dec-2015

Gaseous Releases	Units	1ST Quarter	2ND Quarter	3RD Quarter	4TH Quarter	Year Totals
1. Number of Releases		0	0	0	0	0
2. Total Time For All Releases	(Minutes)	0.00E+00	0.00E+00	0.00E+00	0.00E+00	0.00E+00
3. Maximum Time For A Release	(Minutes)	0.00E+00	0.00E+00	0.00E+00	0.00E+00	0.00E+00
4. Average Time For A Release	(Minutes)	0.00E+00	0.00E+00	0.00E+00	0.00E+00	0.00E+00
5. Minimum Time For A Release	(Minutes)	0.00E+00	0.00E+00	0.00E+00	0.00E+00	0.00E+00
6. Total activity for all releases	(Curies)	0.00E+00	0.00E+00	0.00E+00	0.00E+00	0.00E+00

Table 2-8B

Hatch Nuclear Plant

RADIOACTIVE EFFLUENT RELEASE REPORT - 2015

Gaseous Effluents - Abnormal Release Summary

Unit: 2

Starting: 1-Jan-2015 Ending: 31-Dec-2015

Gaseous Releases	Units	1ST Quarter	2ND Quarter	3RD Quarter	4TH Quarter	Year Totals
1. Number of Releases		0	0	0	0	0
2. Total Time For All Releases	(Minutes)	0.00E+00	0.00E+00	0.00E+00	0.00E+00	0.00E+00
3. Maximum Time For A Release	(Minutes)	0.00E+00	0.00E+00	0.00E+00	0.00E+00	0.00E+00
4. Average Time For A Release	(Minutes)	0.00E+00	0.00E+00	0.00E+00	0.00E+00	0.00E+00
5. Minimum Time For A Release	(Minutes)	0.00E+00	0.00E+00	0.00E+00	0.00E+00	0.00E+00
6. Total activity for all releases	(Curies)	0.00E+00	0.00E+00	0.00E+00	0.00E+00	0.00E+00

Table 2-8C

Hatch Nuclear Plant

RADIOACTIVE EFFLUENT RELEASE REPORT - 2015

Gaseous Effluents - Abnormal Release Summary

Unit: Site

Starting: 1-Jan-2015 Ending: 31-Dec-2015

Gaseous Releases	Units	1ST Quarter	2ND Quarter	3RD Quarter	4TH Quarter	Year Totals
1. Number of Releases		0	0	0	0	0
2. Total Time For All Releases	(Minutes)	0.00E+00	0.00E+00	0.00E+00	0.00E+00	0.00E+00
3. Maximum Time For A Release	(Minutes)	0.00E+00	0.00E+00	0.00E+00	0.00E+00	0.00E+00
4. Average Time For A Release	(Minutes)	0.00E+00	0.00E+00	0.00E+00	0.00E+00	0.00E+00
5. Minimum Time For A Release	(Minutes)	0.00E+00	0.00E+00	0.00E+00	0.00E+00	0.00E+00
6. Total activity for all releases	(Curies)	0.00E+00	0.00E+00	0.00E+00	0.00E+00	0.00E+00

3.0 Solid Waste

3.1 Regulatory Requirements

The Process Control Program (PCP) and the ODCM requirements presented in this section are for Unit 1 and Unit 2 and are stated in part.

3.1.1 Solid Radioactive Waste System

PCP Section A.3.1 Solid Radioactive Waste System control states:

The solid radwaste system shall be used in accordance with the PROCESS CONTROL PROGRAM to provide for the SOLIDIFICATION of wet solid wastes and for the SOLIDIFICATION and packaging of other radioactive wastes, as required, to ensure that they meet requirements of 10 CFR Parts 20 and 71, prior to shipment of radioactive wastes from the site.

3.1.2 Reporting Requirements

Technical Specification 5.6.3 requires in part:

The Radioactive Effluent Release Report covering the operation of the unit shall be submitted in accordance with 10 CFR 50.36a. The report shall include a summary of the quantities of radioactive liquid and gaseous effluents and solid waste released from the unit. The material provided shall be consistent with the objectives outlined in the ODCM and the Process Control Program and in conformance with 10 CFR 50.36a and 10 CFR 50, Appendix I, Section IV.B.1.

PCP Section A.4.1 states in part:

The Radioactive Effluent Release Report, submitted in accordance with Technical Specification 5.6.3, shall include a summary of the quantities of solid radwaste released from the units as outlined in Regulatory Guide 1.21, "Measuring, Evaluating, and Reporting Radioactivity in Solid Wastes and Releases of Radioactive Materials in Liquid and Gaseous Effluents from Light-Water-Cooled Nuclear Power Plants," Revision 1, June 1974, with data summarized on a 6 month basis following the format of Appendix B thereof.

For each type of solid radwaste shipped offsite during the report period, the report shall include the following information:

a. Container volume.

b. Total curie quantity (specify whether determined by measurement or estimate).

c. Principal radionuclides (specify whether determined by measurement or estimate).

d. Type of waste (such as spent resin, compacted dry waste, evaporator bottoms).

e. Type of container (such as LSA, type A, type B, large quantity). f.

Solidification agent (such as cement).

Major changes to the solid radioactive waste treatment system shall be reported to the Nuclear Regulatory Commission in the Radioactive Effluent Release Report for the period in which the evaluation was reviewed and accepted by the PRB.

3.2 Solid Waste Data

Regulatory Guide 1.21, Table 3 is found in this report as Table 3-1.

TABLE 3-1
E. I. HATCH NUCLEAR PLANT RADIOACTIVE EFFLUENT RELEASE REPORT - 2015 SOLID WASTE AND IRRADIATED FUEL SHIPMENTS UNIT 1 AND 2
STARTING: 1-Jan-2015 ENDING: 30-Jun-2015

A. SOLID WASTE SHIPPED OFFSITE FOR BURIAL OR DISPOSAL (Not irradiated fuel)

1. Type of waste	UNIT	6 month period	Est. Total ERROR %
a. Spent resins, filter sludges, evaporator bottoms, etc.	m^3	3.45 E+01	
	Ci	4.15 E+02	1.00 E 01
b. Dry compressible waste, contaminated equip. etc.	m^3	6.92 E+02	
	Ci	2.13 E-01	2.00 E 01
c. Irradiated components, control rods,	m^3		
	Ci		
d. Control Rod Drive Filters	m^3		
	Ci		
e. Other (describe) Equip. etc.	m^3		
	Ci		

2. Estimate of major nuclide composition (by type of waste)

ISOTOPE	PERCENT	CURIES
a.Fe-55	44.4	1.84 E+02
Co-60	29.9	1.24 E+02
Zn-65	8.0	3.29 E+01
Mn-54	11.7	4.87 E+01
Cs-137	0.2	9.61 E-01
Cr-51	0.8	3.31 E+00
Other	5.0	2.07 E+01
b.Fe-55	62.8	1.34 E-01
Co-60	15.6	3.31 E-02
Mn-54	4.59	9.76 E-03
Zn-65	2.13	4.53 E-03
Other	14.9	3.17 E-02
c.		
d.		
e.		

3. Solid Waste Disposition

Number of Shipments	Mode of Transportation	Destination
All waste sent to processors	N/A	N/A

B. IRRADIATED FUEL SHIPMENTS (Disposition)

Number of Shipments	Mode of Transportation	Destination
0	N/A	N/A

TABLE 3-1
E. I. HATCH NUCLEAR PLANT RADIOACTIVE EFFLUENT RELEASE REPORT - 2015 SOLID WASTE AND IRRADIATED FUEL SHIPMENTS UNIT 1 AND 2
STARTING: 1-Jul-2015 ENDING: 31-Dec-2015

A. SOLID WASTE SHIPPED OFFSITE FOR BURIAL OR DISPOSAL (Not irradiated fuel)

1. Type of waste	UNIT	6 month period	Est. Total ERROR %
a. Spent resins, filter sludges, evaporator bottoms, etc.	m^3	4.24E+01	
	Ci	3.12E+01	1.00 E 01
b. Dry compressible waste, contaminated equip. etc.	m^3	3.56E+03	
	Ci	2.79E+00	2.00 E 01
c. Irradiated components, control rods,	m^3		
	Ci		
d. Control Rod Drive Filters	m^3		
	Ci		
e. Other (describe) Equip. etc.	m^3		
	Ci		

2. Estimate of major nuclide composition (by type of waste)

ISOTOPE	PERCENT	CURIES
a.Fe-55	33.9	1.06 E+01
Co-60	38.4	1.20 E+01
Zn-65	4.9	1.53 E+00
Mn-54	9.2	2.87 E+00
Cs-137	6.5	2.03 E+00
Other	7.2	2.23 E+00
b.Fe-55	62.8	1.91 E+00
Co-60	15.6	4.74 E-01
Mn-54	4.59	1.40 E-01
Zn-65	2.13	6.49 E-02
Other	14.9	4.54 E-01
c.		
d.		
e.		

3. Solid Waste Disposition

Number of Shipments	Mode of Transportation	Destination
All waste sent to processors	N/A	N/A

B. IRRADIATED FUEL SHIPMENTS (Disposition)

Number of Shipments	Mode of Transportation	Destination
0	N/A	N/A

TABLE 3-1
E. I. HATCH NUCLEAR PLANT RADIOACTIVE EFFLUENT RELEASE REPORT - 2015 SOLID WASTE AND IRRADIATED FUEL SHIPMENTS UNIT 1 AND 2
STARTING: 1-Jan-2015 ENDING: 30-Jun-2015

TYPE OF WASTE	CURIE QUANTITY/ DETERMINED	PRINCIPAL NUCLIDES/ DETERMINATION	BURIAL COTAINER DESCRIPTION	NUMBER OF CONTAINERS SHIPPED	VOLUME OF EACH CONTAINER CUBIC FEET (FT 3)	TYPE SHIPMENT/ CONTAINER	SOLIDIFICATION AGENT
Dewatered Resins	415	Zn-65,Fe-55,Co-60 Mn-54, Cr-51	Carbon Steel Liners/ Poly HIC	8	195 (external)/ 120.3 (external)	14-210 DOT 7A TYPE A CASK /8-120B Type B Shipping Cask	N/A
Dry Active Waste	0.213	Fe-55,Co-60,Mn-54 Zn-65	B-25 Boxes/High Integrity Container	50 * See Note	95/ 2080	General Design (B-25)/Sealands (IP-1)	N/A

* Note : The actual size and number of the containers may vary from the recorded values due to the use of different containers by waste processors.

TABLE 3-1
E. I. HATCH NUCLEAR PLANT RADIOACTIVE EFFLUENT RELEASE REPORT - 2015 SOLID WASTE AND IRRADIATED FUEL SHIPMENTS UNIT 1 AND 2
STARTING: 1-Jul-2015 ENDING: 31-Dec-2015

TYPE OF WASTE	CURIE QUANTITY/ DETERMINED	PRINCIPAL NUCLIDES/ DETERMINATION	BURIAL COTAINER DESCRIPTION	NUMBER OF CONTAINERS SHIPPED	VOLUME OF EACH CONTAINER CUBIC FEET (FT 3)	TYPE SHIPMENT/ CONTAINER	SOLIDIFICATION AGENT
Dewatered Resins	31.2	Zn-65,Fe-55,Co-60 Mn-54, Cr-51	Carbon Steel Liners	8	195 (external)	14-210 DOT 7A TYPE A CASK /8-120B Type B Shipping Cask	N/A
Dry Active Waste	2.79	Fe-55,Co-60,Mn-54 Zn-65	B-25 Boxes/High Integrity Container	45 * See Note	95/ 2080	General Design (B-25)/ Sealands (IP-1)	N/A

* Note : The actual size and number of the containers may vary from the recorded values due to the use of different containers by waste processors.

4.0 Doses to Members of the Public Inside the Site Boundary

4.1 Regulatory Requirements

ODCM 7.2.2.3 states in part that the Radioactive Effluent Release Report shall also include an assessment of the radiation doses from radioactive liquid and gaseous effluents to MEMBERS OF THE PUBLIC due to their activities inside the SITE BOUNDARY during the report period; this assessment must be performed in accordance with the ODCM.

4.2 Demonstration of Compliance

The locations of concern within the site boundary are the Roadside Park, the Camping Area, the Recreation Area, and the Visitors Center. Listed in Table 4-1 are: The distance and direction from a point midway between the center of Unit 1 and the Unit 2 reactors, the dispersion and deposition factors for any releases from the Main Stack (elevated) and from the reactor building (ground level); and the estimated maximum occupancy factor for an individual and the assumed age group of this individual.

The source term is not listed in Table 4-1 . The source term is listed in Tables 2-2A and 2-2B, for the elevated releases. Similarly the source term is listed in Tables 2-3A and 2-3B for the ground level releases.

The maximum doses in units of mrem accumulated by an individual MEMBER OF THE PUBLIC due to their activities inside the site boundary during the reporting period are presented in Table 4-1.

Table 4-1

Hatch Nuclear Plant

RADIOACTIVE EFFLUENT RELEASE REPORT - 2015

Doses to a Member of the Public Due to Activities Inside the Site Boundary

Unit: Site

Starting: 1-Jan-2015 Ending: 31-Dec-2015

Location Name: ROADSIDE PARK
Distance (kilometers): 1.18E+00
Sector: WNW
Occupancy Factor: 2.28E-04
Age Group: Child

Ground Level Release	Particulate and Radioiodine	X/Q (sec/m3): 7.00E-06	D/Q (m-2): 2.01E-08
Ground Level Release	Noble Gas	X/Q (sec/m3): 7.83E-06	
Elevated Release	Particulate and Radioiodine	X/Q (sec/m3): 2.37E-08	D/Q (m-2): 1.29E-09
Elevated Release	Noble Gas	X/Q (sec/m3): 2.42E-08	

	Units	1ST Quarter	2ND Quarter	3RD Quarter	4TH Quarter	Year
Skin	mRem	2.62E-10	2.65E-13	8.06E-13	3.48E-12	2.67E-10
GI-Lli	mRem	2.39E-09	2.08E-09	2.91E-09	2.71E-09	1.01E-08
Liver	mRem	2.39E-09	2.08E-09	2.91E-09	2.71E-09	1.01E-08
Bone	mRem	2.30E-10	7.52E-12	1.43E-12	3.67E-12	2.43E-10
Lung	mRem	2.42E-09	2.08E-09	2.92E-09	2.72E-09	1.01E-08
Total Body	mRem	2.39E-09	2.08E-09	2.91E-09	2.71E-09	1.01E-08
Thyroid	mRem	2.49E-09	2.09E-09	2.94E-09	2.73E-09	1.02E-08
Kidney	mRem	2.39E-09	2.08E-09	2.91E-09	2.71E-09	1.01E-08

Table 4-1

Hatch Nuclear Plant

RADIOACTIVE EFFLUENT RELEASE REPORT - 2015

Doses to a Member of the Public Due to Activities Inside the Site Boundary

Unit: Site

Starting: 1-Jan-2015 Ending: 31-Dec-2015

Location Name: CAMPING AREA
Distance (kilometers): 1.27E+00
Sector: WNW
Occupancy Factor: 5.48E-03
Age Group: Child

Ground Level Release	Particulate and Radioiodine	X/Q (sec/m3): 6.27E-06	D/Q (m-2): 1.80E-08
Elevated Release	Particulate and Radioiodine	X/Q (sec/m3): 2.33E-08	D/Q (m-2): 2.01E-08
Ground Level Release	Noble Gas	X/Q (sec/m3): 7.03E-06	
Elevated Release	Noble Gas	X/Q (sec/m3): 2.38E-08	

	Units	1ST Quarter	2ND Quarter	3RD Quarter	4TH Quarter	Year
Liver	mRem	5.17E-08	4.48E-08	6.29E-08	5.85E-08	2.18E-07
GI-LIi	mRem	5.17E-08	4.49E-08	6.30E-08	5.85E-08	2.18E-07
Bone	mRem	5.25E-09	2.27E-10	2.57E-10	1.69E-10	5.91E-09
Total Body	mRem	5.17E-08	4.48E-08	6.29E-08	5.85E-08	2.18E-07
Thyroid	mRem	5.39E-08	4.50E-08	6.34E-08	5.89E-08	2.21E-07
Skin	mRem	5.99E-09	8.13E-11	2.79E-10	1.78E-10	6.53E-09
Kidney	mRem	5.17E-08	4.48E-08	6.30E-08	5.85E-08	2.18E-07
Lung	mRem	5.23E-08	4.49E-08	6.30E-08	5.86E-08	2.19E-07

Table 4-1

Hatch Nuclear Plant

RADIOACTIVE EFFLUENT RELEASE REPORT - 2015

Doses to a Member of the Public Due to Activities Inside the Site Boundary

Unit: Site

Starting: 1-Jan-2015 Ending: 31-Dec-2015

Location Name: RECREATION AREA
Distance (kilometers): 1.03E+00
Sector: SSE
Occupancy Factor: 2.37E-02
Age Group: Child

Ground Level Release	Particulate and Radioiodine	X/Q (sec/m3): 5.73E-06	D/Q (m-2): 2.36E-08
Elevated Release	Noble Gas	X/Q (sec/m3): 3.30E-08	
Elevated Release	Particulate and Radioiodine	X/Q (sec/m3): 3.21E-08	D/Q (m-2): 1.56E-09
Ground Level Release	Noble Gas	X/Q (sec/m3): 6.42E-06	

	Units	1ST Quarter	2ND Quarter	3RD Quarter	4TH Quarter	Year
Bone	mRem	2.78E-08	6.49E-10	1.51E-10	4.24E-10	2.90E-08
Lung	mRem	2.14E-07	1.77E-07	2.48E-07	2.31E-07	8.71E-07
Total Body	mRem	2.11E-07	1.77E-07	2.48E-07	2.31E-07	8.67E-07
Thyroid	mRem	2.20E-07	1.78E-07	2.50E-07	2.33E-07	8.80E-07
Kidney	mRem	2.11E-07	1.77E-07	2.48E-07	2.31E-07	8.67E-07
GI-Lli	mRem	2.11E-07	1.77E-07	2.48E-07	2.31E-07	8.68E-07
Skin	mRem	3.20E-08	3.31E-11	1.01E-10	4.26E-10	3.25E-08
Liver	mRem	2.11E-07	1.77E-07	2.48E-07	2.31E-07	8.67E-07

Table 4-1

Hatch Nuclear Plant

RADIOACTIVE EFFLUENT RELEASE REPORT - 2015

Doses to a Member of the Public Due to Activities Inside the Site Boundary

Unit: Site

Starting: 1-Jan-2015 Ending: 31-Dec-2015

Location Name: VISITORS CENTER
Distance (kilometers): 6.94E-01
Sector: WSW
Occupancy Factor: 4.57E-04
Age Group: Child

Ground Level Release	Noble Gas	X/Q (sec/m3): 1.87E-05	
Elevated Release	Particulate and Radioiodine	X/Q (sec/m3): 4.97E-08	D/Q (m-2): 2.26E-09
Elevated Release	Noble Gas	X/Q (sec/m3): 5.00E-08	
Ground Level Release	Particulate and Radioiodine	X/Q (sec/m3): 1.72E-05	D/Q (m-2): 5.47E-08

	Units	1ST Quarter	2ND Quarter	3RD Quarter	4TH Quarter	Year
Total Body	mRem	1.19E-08	1.02E-08	1.43E-08	1.34E-08	4.98E-08
Kidney	mRem	1.19E-08	1.02E-08	1.43E-08	1.34E-08	4.98E-08
Skin	mRem	1.43E-09	1.03E-12	2.95E-12	1.84E-11	1.45E-09
Thyroid	mRem	1.24E-08	1.03E-08	1.45E-08	1.34E-08	5.05E-08
Lung	mRem	1.20E-08	1.03E-08	1.44E-08	1.34E-08	5.00E-08
Bone	mRem	1.25E-09	3.68E-11	6.14E-12	1.92E-11	1.31E-09
GI-Lli	mRem	1.19E-08	1.03E-08	1.43E-08	1.34E-08	4.99E-08
Liver	mRem	1.19E-08	1.02E-08	1.43E-08	1.34E-08	4.98E-08

5.0 Total Dose from Uranium Fuel Cycle (40 CFR 190)

5.1 Regulatory Requirements

The annual (calendar year) dose or dose commitment to any MEMBER OF THE PUBLIC due to releases of radioactivity and to radiation from uranium fuel cycle sources shall be limited to less than or equal to 25 mrems to the whole body or to any organ, except the thyroid, which shall be limited to less than or equal to 75 mrems.

5.2 Demonstration of Compliance

No dose limits stated in ODCM Sections 2.1.3, 3.1.3, and 3.1.4 were exceeded. Therefore, compliance with 40 CFR 190 dose limits was demonstrated in accordance with the requirements of ODCM Section 5.1.3.

6.0 Meteorological Data

The Radioactive Effluent Release Report, to be submitted by May 1 of each year, shall include an annual summary of hourly meteorological data collected over the previous year. This annual summary may be either in the form of an hour-by-hour listing of wind speed, wind direction, atmospheric stability, and precipitation (if measured), on magnetic tape, or, in the form of joint frequency distributions of wind speed, wind direction and atmospheric stability.

In lieu of submission with the Radioactive Effluent Release Report, the licensee has retained this summary of required meteorological data on site in a file. It will be provided to the NRC upon request.

7.0 Program Deviations

7.1 Inoperable Liquid or Gaseous Effluent Monitoring Instrumentation

7.1.1 Regulatory Requirements

ODCM, Chapter 7, Section 7.2.2.6.2 states that the Radioactive Effluent Release Report shall include deviations from the liquid and gaseous effluent monitoring instrumentation operability requirements included in Sections 2.1.1 and 3.1.1, respectively.

7.1.2 Description of Deviations

There was one deviation from the liquid and gaseous effluent monitoring instrumentation operability requirements during this reporting period.

RAS 1-15-204: Radioactive Gaseous Effluent Monitoring Instrument Channels have been non functional for >30 days. The Main Stack Radiation Monitor A, 1D11K600A, was out of service from 10/07/15 though the end of the year.

7.2 Tanks Exceeding Curie Content Limits

7.2.1 Regulatory Requirements

ODCM 7.2.2.6 states in part that the report shall include notifications if the contents within any outside temporary tank, for liquids, exceed the limit of Technical Specification 5.5.8.b.

7.2.2 Description of Deviations

There were no outside temporary tanks, for liquids, that exceeded the limit of Technical Specification 5.5.8.b during this reporting period.

7.3 Effluent Sample Analysis Exceeding Minimum Detectable Concentration (MDC)

7.3.1 Regulatory Requirements

ODCM 7.2.2.6 states in part that deviations from MDC(s) required in Table 3-3 shall be included in the Radioactive Effluent Release Report.

7.3.2 Description of Deviation

There were no deviations from MDC(s) required in Table 3-3 during this reporting period.

8.0 Changes to the Plant Hatch Offsite Dose Calculation Manual (ODCM)

8.1 Regulatory Requirements

Pursuant to Technical Specification 5.5.1 and ODCM Section 7.2.2.5, licensee initiated changes shall be submitted to the NRC in the form of a complete, legible copy of the entire ODCM as part of or concurrent with the Radioactive Effluent Release Report for the period of the report in which any change in the ODCM was made. Each change shall be identified by markings in the margin of the affected pages, clearly indicating the area of the page that was changed, and shall indicate the date (i.e., month and year) the change was implemented.

8.2 Description of Changes

There were no changes to the Hatch ODCM in 2015.

9.0 Major Changes to Liquid, Gaseous, or Solid Radwaste Treatment Systems

9.1 Regulatory Requirements

The Radioactive Effluent Release Report shall include any major change to liquid, gaseous, or solid radwaste treatment systems pursuant to ODCM
Chapter 7, Section 7.2.2.7.

9.2 Description of Major Changes

Gaseous Radwaste System

There were no major changes to the gaseous radwaste system during this reporting period.

Solid Radwaste System

There were no major changes to the solid radwaste system during this reporting period.

Liquid Radwaste System

There were no major changes to the Liquid Radwaste Treatment System during this reporting period.

SOUTHERN COMPANY

E. I. HATCH NUCLEAR PLANT

UNITS NO. 1 & 2

ANNUAL REPORT

JANUARY 1, 2015 - DECEMBER 31,2015

APPENDIX A

CARBON-14

Carbon-14 (C-14) is a naturally-occurring radionuclide with a 5730 year half life. Nuclear weapons testing in the 1950s and 1960s significantly increased the amount of C-14 in the atmosphere. Nuclear power plants also produce C-14, but the amount is infinitesimal compared to what has been distributed in the environment due to weapons testing and what is produced by natural cosmic ray interactions.

As nuclear plants have improved gaseous waste processing systems and improved fuel performance, the percentages of "principal radionuclides" in gaseous effluents have changed, and C-14 has become a larger percentage. "Principal radionuclides" are determined based on public dose contribution or the amount of activity discharged compared to other radionuclides of the same effluent type. In Revision 2 (June 2009) of Regulatory Guide 1.21 (RG 1.21), "Measuring, Evaluating, and Reporting Radioactive Material in Liquid and Gaseous Effluents and Solid Waste," the NRC recommended re-evaluating "principal radionuclides" and reporting C-14 as appropriate. In 2010 Radioactive Effluent Release Reports, virtually all U. S. nuclear power plants have reported C-14 amounts released and resulting doses to the maximally exposed member of the public.

Because C-14 is considered a hard-to-detect radionuclide which must be chemically separated from the effluent stream before it can be measured, RG 1.21 provides the option of calculating the C-14 source term based on power generation. The Electric Power Research Institute (EPRI) developed an accepted methodology for calculating C-14, and published the results in Technical Report 1021106 (December 2010), "Estimation of Carbon-14 in Nuclear Power Plant Gaseous Effluents." Evaluation of C-14 in radioactive liquid effluents is not required because the quantity and dose contribution has been determined to be insignificant.

At Plant Hatch, the quantity of C-14 released in gaseous effluents in 2010 was estimated to be 14.16 Curies (per unit). Approximately 95% of the C-14 released is in the form of $^{14}CO_2$ and is incorporated into plants through photosynthesis. Ingestion dose results from this pathway. The remaining 5% is estimated to be organic. Both the organic and inorganic forms of C-14 contribute to inhalation dose. A child is the maximally exposed individual, and bone dose is the highest organ dose. Using the dose calculation methodology from the Hatch ODCM, the resulting bone dose to a child located at the controlling receptor location would be 1.59E-01 mrem in a year which is 1.06% of the regulatory limit of 15 mrem per year (per unit) to any organ due to gaseous effluents. The resulting total body dose to a child located at the controlling receptor location would be 3.18E-02 mrem in a year which is 0.21% of the regulatory limit of 15 mrem per year (per unit) total body dose due to gaseous effluents.

SOUTHERN COMPANY

E. I. HATCH NUCLEAR PLANT

UNITS NO. 1 & 2

ANNUAL REPORT

JANUARY 1, 2015 - DECEMBER 31,2015

APPENDIX B

Appendix B

Summary of Groundwater Protection Program

Nuclear Management Procedure NMP-EN-002 provides the methodology and criteria for implementation of the Radiological Groundwater Protection Program (GWPP) including evaluating hydrology and geology, conducting a risk assessment, establishing and modifying on-site ground water monitoring, voluntary communications, corrective actions, reporting, and record keeping. Each program element of NEI 07-07 "Industry Ground Water Protection Initiative – Final Guidance Document" is identified in the corresponding procedure element.

At Plant Hatch procedure 64CH-SAM-028-0 Releases Via Planned and Unplanned Routes: Sampling and Analysis procedure provides instructions for the sampling of groundwater sample wells, drainage outfalls, STP effluent and drinking water deep wells for the Releases via Unplanned Routes (RVUR) sampling and analysis program.

The Attachments to 64CH-SAM-028-0 contain the maps of the sampling points, the locations, collection frequency and the analyses required.

Edwin I. Hatch Nuclear Plant Units 1&2;
Joseph M. Farley Nuclear Plant Units 1&2;
Vogtle Electric Generating Plant Units 1&2
Annual Radioactive Effluent Release Reports and Offsite Dose Calculation Manual for 2015

Enclosure 2

Joseph M. Farley Nuclear Plant Units 1&2
Annual Radioactive Effluent Release Report for 2015

ACKNOWLEDGEMENT OF OWNERSHIP

The contents of this Annual Radioactive Effluent Release Report, contained herein, are true and accurate to the best of my knowledge. I understand that I am ultimately responsible for the information that has been captured within these pages.

Keith Brown

Chemistry Manager

SOUTHERN NUCLEAR OPERATING COMPANY
FARLEY NUCLEAR PLANT UNIT NO. ONE
LICENSE NO. NPF-2
AND
FARLEY NUCLEAR PLANT UNIT NO. TWO
LICENSE NO. NPF-8

ANNUAL RADIOACTIVE EFFLUENT RELEASE REPORT
CALENDAR YEAR 2015

FARLEY NUCLEAR PLANT
ANNUAL RADIOACTIVE EFFLUENT
RELEASE REPORT

SECTION	TITLE	PAGE
1.0	LIQUID EFFLUENTS	1
1.1	Regulatory Requirements	1
1.1.1	Concentration Limits	1
1.1.2	Dose Limits	1
1.2	Effluent Concentration Limit (ECL)	1
1.3	Measurements and Approximation of Total Radioactivity	2
1.3.1	Total Radioactivity Determination	2
1.3.2	Total Error Estimation	3
1.4	Liquid Effluents - Release Data	3
1.5	Radiological Impact Due to Liquid Releases	3
1.6	Liquid Effluents - Batch Releases	3
1.7	Liquid Effluents - Abnormal Releases	3
2.0	GASEOUS EFFLUENTS	29
2.1	Regulatory Requirements	29
2.1.1	Dose Rate Limits	29
2.1.2	Air Doses Due to Noble Gases in Gaseous Releases	29
2.1.3	Doses to a Member of the Public	29
2.2	Measurements and Approximation of Total Radioactivity	30
2.2.1	Sample Collection and Analysis	30

FARLEY NUCLEAR PLANT
ANNUAL RADIOACTIVE EFFLUENT
RELEASE REPORT

SECTION	TITLE	PAGE
2.2.2	Total Quantities of Radioactivity, Dose Rates and Cumulative Doses	30
2.2.2.1	Fission and Activation Gases	31
2.2.2.2	Radioiodine, Tritium and Particulate Releases	31
2.2.2.3	Gross Alpha Release	32
2.2.3	Total Error Estimation	32
2.3	Gaseous Effluent Release Data	32
2.4	Radiological Impact Due to Gaseous Releases	33
2.5	Gaseous Effluents - Batch Releases	33
2.6	Gaseous Effluents - Abnormal Releases	33
3.0	SOLID WASTE	62
3.1	Regulatory Requirements	62
3.1.1	Solid Radioactive Waste System	62
3.1.2	Reporting Requirements	62
3.2	Solid Waste Data	62
4.0	DOSES TO MEMBERS OF THE PUBLIC INSIDE THE SITE BOUNDARY	65
4.1	Regulatory Requirements	65
4.2	Demonstration of Compliance	65

FARLEY NUCLEAR PLANT
ANNUAL RADIOACTIVE EFFLUENT
RELEASE REPORT

SECTION	TITLE	PAGE
5.0	TOTAL DOSE FROM URANIUM FUEL CYCLE (40CFR190)	69
5.1	Regulatory Requirements	69
5.2	Demonstration of Compliance	69
6.0	METEOROLOGICAL DATA	69
7.0	PROGRAM DEVIATIONS	69
7.1	Inoperable Liquid or Gaseous Effluent Monitoring Instrumentation	69
7.1.1	Regulatory Requirements	69
7.1.2	Description of Deviations	69
7.2	Effluent Sample Analysis Exceeding Minimum Detectable Concentration (MDC)	70
7.2.1	Regulatory Requirements	70
7.2.2	Description of Deviations	70
7.3	Incorrect Compositing of Liquid or Gaseous Effluent Samples	70
7.3.1	Regulatory Requirements	70
7.3.2	Description of Deviations	70
8.0	CHANGES TO THE PLANT FARLEY ODCM	70
8.1	Regulatory Requirements	70
8.2	Description of Changes	70

FARLEY NUCLEAR PLANT
ANNUAL RADIOACTIVE EFFLUENT
RELEASE REPORT

SECTION	TITLE	PAGE
9.0	MAJOR CHANGES TO LIQUID, GASEOUS, OR SOLID RADWASTE TREATMENT SYSTEMS	71
9.1	Regulatory Requirements	71
9.2	Description of Major Changes	71
App.A	Appendix A, Carbon-14 Supplement for 2015	72

FARLEY NUCLEAR PLANT
ANNUAL RADIOACTIVE EFFLUENT
RELEASE REPORT

TABLE	LIST OF TABLES	PAGE
1-1A	Liquid Effluents - Summation of All Releases, Unit 1 (Quarters 1,2, 3 and 4)	4
1-1B	Liquid Effluents - Summation of All Releases, Unit 2 (Quarters 1,2, 3 and 4)	5
1-1C	Liquid Effluents - Summation of All Releases, Site (Quarters 1,2, 3 and 4)	6
1-2A	Liquid Effluents, Unit 1 (Quarters 1,2, 3 and 4)	7
1-2B	Liquid Effluents, Unit 2 (Quarters 1,2, 3 and 4)	12
1-2C	Liquid Effluents, Site (Quarters 1,2, 3 and 4)	16
1-3A	Doses to a MEMBER OF THE PUBLIC Due to Liquid Releases, Unit 1 (Quarters 1,2,3 and 4)	22
1-3B	Doses to a MEMBER OF THE PUBLIC Due to Liquid Releases, Unit 2 (Quarters 1,2,3 and 4)	23
1-4	Minimum Detectable Concentration - Liquid Sample Analyses	24
1-5A	Liquid Effluents - Batch Release Summary, Unit 1	25
1-5B	Liquid Effluents - Batch Release Summary, Unit 2	26
1-6A	Liquid Effluents - Abnormal Release Summary, Unit 1	27
1-6B	Liquid Effluents - Abnormal Release Summary, Unit 2	28

FARLEY NUCLEAR PLANT
ANNUAL RADIOACTIVE EFFLUENT
RELEASE REPORT

TABLE	LIST OF TABLES	PAGE
2-1A	Gaseous Effluents - Summation of All Releases, Unit 1 (Quarters 1,2, 3 and 4)	34
2-1B	Gaseous Effluents - Summation of All Releases, Unit 2 (Quarters 1,2, 3 and 4)	35
2-1C	Gaseous Effluents - Summation of All Releases, Site (Quarters 1,2, 3 and 4)	36
2-2A	Gaseous Effluents - Mixed Mode Level Releases, Unit 1 (Quarters 1,2, 3 and 4)	37
2-2B	Gaseous Effluents - Mixed Mode Level Releases, Unit 2 (Quarters 1,2, 3 and 4)	41
2-2C	Gaseous Effluents - Mixed Mode Level Releases, Site (Quarters 1,2, 3 and 4)	43
2-3A	Gaseous Effluents - Ground Level Releases, Unit 1 (Quarters 1,2, 3 and 4)	47
2-3B	Gaseous Effluents - Ground Level Releases, Unit 2 (Quarters 1,2, 3 and 4)	49
2-3C	Gaseous Effluents - Ground Level Releases, Site (Quarters 1,2, 3 and 4)	51

FARLEY NUCLEAR PLANT
ANNUAL RADIOACTIVE EFFLUENT
RELEASE REPORT

TABLE	LIST OF TABLES	PAGE
2-4A	Air Doses Due to Noble Gases in Gaseous Releases, Unit 1 (Quarters 1,2, 3 and 4)	53
2-4B	Air Doses Due to Noble Gases in Gaseous Releases, Unit 2 (Quarters 1,2, 3 and 4)	54
2-5A	Doses to a MEMBER OF THE PUBLIC Due to Radioiodines, Tritium, and Particulates in Gaseous Releases, Unit 1 (Quarters 1,2,3 and 4)	55
2-5B	Doses to a MEMBER OF THE PUBLIC Due to Radioiodines, Tritium, and Particulates in Gaseous Releases, Unit 2 (Quarters 1,2,3 and 4)	56
2-6	Minimum Detectable Concentration - Gaseous Effluent Analyses	57
2-7A	Gaseous Effluents - Batch Release Summary, Unit 1	58
2-7B	Gaseous Effluents - Batch Release Summary, Unit 2	59
2-8A	Gaseous Effluents - Abnormal Release Summary, Unit 1	60
2-8B	Gaseous Effluents - Abnormal Release Summary, Unit 2	61
3-1	Solid Waste and Irradiated Fuel Shipments	63
4-1	Doses to a MEMBER OF THE PUBLIC Due to Activities Inside the Site Boundary, Site	66

1.0 LIQUID EFFLUENTS

This section contains applicable ODCM limits for liquid effluents as well as the quantities of radioactive liquid effluents released during 2015. These quantities are summarized on a quarterly basis and include any unplanned releases. A tabulation of the total body and organ doses which were calculated in accordance with ODCM 2.4 are presented to show conformance with the limits of ODCM 2.1.3.

1.1 Regulatory Requirements

1.1.1 Concentration Limits

Technical Specifications 5.5.4.b and 5.5.4.c state that the concentration of radioactive material released in liquid effluents to UNRESTRICTED AREAS (see ODCM Figure 10-1) shall be limited at all times to ten times the concentrations specified in 10CFR20, Appendix B, Table 2, Column 2 for radionuclides other than dissolved or entrained noble gases. For dissolved or entrained noble gases, the concentration shall be limited to 1.0E-04 μCi/ml total activity.

1.1.2 Dose Limits

Technical Specifications 5.5.4.d and 5.5.4.e state that the dose or dose commitment to a MEMBER OF THE PUBLIC from radioactive materials in liquid effluents released, from each unit, to UNRESTRICTED AREAS (see ODCM Figure 10-1) shall be limited:

a. During any calendar quarter to less than or equal to 1.5 mrem to the total body and to less than or equal to 5 mrem to any organ, and

b. During any calendar year to less than or equal to 3 mrem to the total body and to less than or equal to 10 mrem to any organ.

1.2 Effluent Concentration Limit (ECL)

ECL values used in determining allowable liquid radwaste release rates and concentrations, for principal gamma emitters, I-131, tritium, Sr-89, Sr-90, and Fe-55, are taken from 10CFR Part 20, Appendix B, Table 2, Column 2. A tolerance factor of 10 is utilized to allow flexibility in establishing practical monitor setpoints which can accommodate effluent releases at concentrations higher than the ECL values stated in 10CFR20, Appendix B, Table 2, Column 2.

For dissolved or entrained noble gases in liquid radwaste, the ECL is 1.0E-04 μCi/ml total activity.

For gross alpha in liquid radwaste, the ECL is 2.0E-09 μCi/ml.

Furthermore, for all the above radionuclides, or categories of radioactivity, the overall ECL fraction is determined in accordance with 10CFR Part 20, Appendix B.

1.3 Measurements and Approximation of Total Radioactivity

The radionuclides listed below are specifically considered when evaluating liquid effluents:

MN-54	CS-134
FE-59	CS-137
CO-58	CE-141
CO-60	CE-144
ZN-65	MO-99
SR-89	FE-55
SR-90	H-3
I-131	

1.3.1 Total Radioactivity Determination

Batch Releases: Representative pre-release grab samples are obtained and analyzed in accordance with ODCM Table 2-3. Isotopic analyses are performed using the computerized pulse height analysis system utilizing high resolution germanium detectors. Isotopic values thus obtained are used for release rate calculations as specified in the ODCM. Only those nuclides that are detected are used in the calculations. All Gross Alpha, Strontium, and Iron-55, samples are sent offsite to the Georgia Power Environmental Laboratory for analysis. Gross beta determinations are made using 2 pi gas flow proportional counters. Tritium determinations are made using liquid scintillation techniques. Dissolved gases are determined employing grab sampling techniques and then counting on the pulse height analyzer.

The sample analyses results are used along with the ECL values to determine the ECL fraction for the planned release. The ECL fraction is then used, with the appropriate safety factors, and the expected dilution stream flow, to calculate the maximum permissible release rate and a liquid effluent monitor setpoint. The monitor setpoint is calculated to assure that the limits of the ODCM are not exceeded. A monitor reading in excess of the calculated setpoint will result in automatic termination of the liquid radwaste discharge.

Radionuclide concentrations, safety factors, dilution stream flow rate, and liquid effluent radiation monitor calibration factors are used by the computer to generate a pre-release printout. If the release is not permissible, appropriate warnings will be displayed on the computer screen and on the printout. If the release is permissible, it is approved by a Chemistry Technician. The release permit is transferred from the Chemistry Department to the Operations Department for release. When the release is completed, the actual release data are provided to the Chemistry Department. These release data, including release rate and release duration, are input into the computer and a post-release printout is generated. This printout contains the actual release rates, radionuclide concentrations and quantities, dilution flow, and calculated doses to an individual.

Continuous Releases: Continuous releases are analogous to batch releases except that they are analyzed on a weekly composite basis in accordance with ODCM Table 2-3.

Typically achieved liquid effluent sample analyses minimum detectable concentrations are reported in Table 1-4.

1.3.2 Total Error Estimation

The maximum error associated with volume and flow measurements, based upon plant calibration practice is estimated to be + or - 10%. The average error associated with counting is estimated to be less than + or - 15%.

1.4 Liquid Effluent Release Data

Summaries of all radioactive liquid effluents released from Units 1 and 2 during 2015 are presented in accordance with Regulatory Guide 1.21 Tables 2A and 2B. Information required by Table 2A is found in this report in Tables 1-1A, 1-1B, and 1-1C; Table 2-B information is presented in Tables 1-2A, 1-2B, and 1-2C. Data is presented on a quarterly basis as required by Regulatory Guide 1.21 for all four quarters.

1.5 Radiological Impact Due to Liquid Releases

The total body and organ doses for Units 1 and 2 are provided in the following tables in order to show conformance with the limits of ODCM 2.1.3:

Unit 1 2015 Doses to a Member of the Public due to Liquid Releases: Table 1-3A

Unit 2 2015 Doses to a Member of the Public due to Liquid Releases: Table 1-3B

1.6 Liquid Effluents - Batch Releases

Batch release information for Units 1 and 2 is summarized in the following tables:

Unit 1 2015 Liquid Effluents - Batch Release Summary: Table 1-5A

Unit 2 2015 Liquid Effluents - Batch Release Summary: Table 1-5B

1.7 Liquid Effluents - Abnormal Releases

There were no abnormal releases during 2015.

Abnormal release information for Units 1 and 2 is summarized in the following tables:

Unit 1 2015 Liquid Effluents - Abnormal Release Summary: Table 1-6A

Unit 2 2015 Liquid Effluents - Abnormal Release Summary: Table 1-6B

Table 1-1A

Joseph M Farley Nuclear Plant
RADIOACTIVE EFFLUENT RELEASE REPORT - 2015
Liquid Effluents - Summation Of All Releases
Unit: 1
Starting: 1-Jan- 2015 Ending: 31-Dec-2015

Type of Effluent	Units	1ST Quarter	2ND Quarter	3RD Quarter	4TH Quarter
A. Fission And Activation Products					
1. Total Release (not including tritium, gases, alpha)	Curies	3.99E-02	9.48E-03	8.60E-04	4.08E-03
2. Average diluted concentration during period	µCi/mL	2.97E-08	8.34E-09	4.18E-10	6.18E-09
3. Percent of Applicable Limit	%	*	*	*	*
B. Tritium					
1. Total Release	Curies	2.02E+02	8.00E+01	1.06E+01	1.35E+02
2. Average diluted Concentration during period	µCi/mL	1.50E-04	7.03E-05	5.18E-06	2.05E-04
3. Percent of Applicable Limit	%	*	*	*	*
C. Dissolved and Entrained Gases					
1. Total Release	Curies	1.43E-02	1.22E-03	3.22E-05	6.33E-05
2. Average diluted Concentration during period	µCi/mL	1.06E-08	1.07E-09	1.56E-11	9.58E-11
3. Percent of Applicable Limit	%	*	*	*	*
D: Gross Alpha Radioactivity					
1. Total Release	Curies	0.00E+00	0.00E+00	0.00E+00	0.00E+00
E: Waste Vol Release (Pre-Dilution)	Liters	1.72E+06	1.22E+06	5.29E+05	7.10E+05
F. Volume of Dilution Water Used	Liters	1.34E+09	1.14E+09	2.06E+09	6.59E+08

* Applicable limits are expressed in terms of dose. See Tables 1-3A and 1-3B of this report.

Table 1-1B

Joseph M Farley Nuclear Plant
RADIOACTIVE EFFLUENT RELEASE REPORT - 2015
Liquid Effluents - Summation Of All Releases
Unit: 2
Starting: 1-Jan- 2015 Ending: 31-Dec-2015

Type of Effluent	Units	1ST Quarter	2ND Quarter	3RD Quarter	4TH Quarter
A. Fission And Activation Products					
1. Total Release (not including tritium, gases, alpha)	Curies	2.58E-02	3.01E-02	3.47E-03	1.26E-02
2. Average diluted concentration during period	µCi/mL	2.05E-08	1.63E-08	2.73E-09	7.79E-09
3. Percent of Applicable Limit	%	*	*	*	*
B. Tritium					
1. Total Release	Curies	1.28E+02	1.91E+02	2.44E+01	1.86E+02
2. Average diluted Concentration during period	µCi/mL	1.02E-04	1.03E-04	1.92E-05	1.15E-04
3. Percent of Applicable Limit	%	*	*	*	*
C. Dissolved and Entrained Gases					
1. Total Release	Curies	1.04E-02	1.19E-03	2.32E-04	2.12E-04
2. Average diluted Concentration during period	µCi/mL	8.27E-09	6.43E-10	1.82E-10	1.32E-10
3. Percent of Applicable Limit	%	*	*	*	*
D: Gross Alpha Radioactivity					
1. Total Release	Curies	0.00E+00	0.00E+00	0.00E+00	0.00E+00
E: Waste Vol Release (Pre-Dilution)	Liters	1.54E+06	1.96E+06	1.45E+06	1.55E+06
F. Volume of Dilution Water Used	Liters	1.26E+09	1.85E+09	1.27E+09	1.61E+09

* Applicable limits are expressed in terms of dose. See Tables 1-3A and 1-3B of this report.

Table 1-1C

Joseph M Farley Nuclear Plant
RADIOACTIVE EFFLUENT RELEASE REPORT - 2015
Liquid Effluents - Summation Of All Releases
Unit: Site
Starting: 1-Jan- 2015 Ending: 31-Dec-2015

Type of Effluent	Units	1ST Quarter	2ND Quarter	3RD Quarter	4TH Quarter
A. Fission And Activation Products					
1. Total Release (not including tritium, gases, alpha)	Curies	6.58E-02	3.96E-02	4.33E-03	1.66E-02
2. Average diluted concentration during period	µCi/mL	2.53E-08	1.33E-08	1.30E-09	7.32E-09
3. Percent of Applicable Limit	%	*	*	*	*
B. Tritium					
1. Total Release	Curies	3.30E+02	2.71E+02	3.51E+01	3.21E+02
2. Average diluted Concentration during period	µCi/mL	1.27E-04	9.07E-05	1.05E-05	1.41E-04
3. Percent of Applicable Limit	%	*	*	*	*
C. Dissolved and Entrained Gases					
1. Total Release	Curies	2.47E-02	2.40E-03	2.64E-04	2.76E-04
2. Average diluted Concentration during period	µCi/mL	9.48E-09	8.05E-10	7.93E-11	1.21E-10
3. Percent of Applicable Limit	%	*	*	*	*
D: Gross Alpha Radioactivity					
1. Total Release	Curies	0.00E+00	0.00E+00	0.00E+00	0.00E+00
E: Waste Vol Release (Pre-Dilution)	Liters	3.26E+06	3.18E+06	1.98E+06	2.26E+06
F. Volume of Dilution Water Used	Liters	2.60E+09	2.98E+09	3.33E+09	2.27E+09

* Applicable limits are expressed in terms of dose. See Tables 1-3A and 1-3B of this report.

Table 1-2A

Joseph M Farley Nuclear Plant
RADIOACTIVE EFFLUENT RELEASE REPORT - 2015
Liquid Effluents
Unit: 1
Starting: 1-Jan-2015 Ending: 31-Dec-2015

Nuclides Released	Unit	Continuous Mode			
		1ST Quarter	2ND Quarter	3RD Quarter	4TH Quarter
Fission & Activation Products					
No Nuclides Found	Curies	0.00E+00	0.00E+00	0.00E+00	0.00E+00
Tritium					
No Nuclides Found	Curies	0.00E+00	0.00E+00	0.00E+00	0.00E+00
Dissolved And Entrained Gases					
No Nuclides Found	Curies	0.00E+00	0.00E+00	0.00E+00	0.00E+00
Gross Alpha Radioactivity					
No Nuclides Found	Curies	0.00E+00	0.00E+00	0.00E+00	0.00E+00

Zeroes in this table indicates that no radioactivity was present at detectable levels.
See Table 1-4 for typical minimum detectable concentrations.

Table 1-2A

Joseph M Farley Nuclear Plant
RADIOACTIVE EFFLUENT RELEASE REPORT - 2015
Liquid Effluents
Unit: 1
Starting: 1-Jan-2015 Ending: 31-Dec-2015

Nuclides Released	Unit	Batch Mode			
		1ST Quarter	2ND Quarter	3RD Quarter	4TH Quarter
Fission & Activation Products					
Co-58	Curies	7.66E-03	1.69E-03	1.71E-04	5.81E-04
Sn-125	Curies	1.91E-05	6.91E-06	0.00E+00	4.03E-05
Ag-110M	Curies	1.38E-05	0.00E+00	4.52E-07	1.06E-05
Mo-99	Curies	0.00E+00	8.66E-06	3.43E-06	7.71E-06
Te-133M	Curies	0.00E+00	2.45E-05	0.00E+00	3.66E-06
As-76	Curies	0.00E+00	0.00E+00	0.00E+00	0.00E+00
Co-60	Curies	2.95E-03	1.30E-03	2.62E-04	4.17E-04
Eu-152	Curies	0.00E+00	0.00E+00	0.00E+00	0.00E+00
Eu-152M	Curies	0.00E+00	0.00E+00	0.00E+00	0.00E+00
Sr-85	Curies	0.00E+00	0.00E+00	0.00E+00	0.00E+00
Br-82	Curies	2.79E-06	0.00E+00	0.00E+00	0.00E+00
Ce-144	Curies	8.88E-06	0.00E+00	0.00E+00	0.00E+00
Eu-154	Curies	0.00E+00	0.00E+00	0.00E+00	0.00E+00
Eu-155	Curies	0.00E+00	0.00E+00	0.00E+00	0.00E+00
Nb-97	Curies	1.34E-05	0.00E+00	0.00E+00	2.04E-06
Ni-56	Curies	0.00E+00	0.00E+00	0.00E+00	0.00E+00
Rb-86	Curies	4.81E-06	0.00E+00	0.00E+00	0.00E+00
Cs-137	Curies	8.74E-06	9.31E-07	0.00E+00	1.19E-05
Ta-182	Curies	4.40E-06	0.00E+00	0.00E+00	0.00E+00
Cr-51	Curies	1.45E-03	1.23E-03	0.00E+00	2.71E-04
Te-132	Curies	0.00E+00	0.00E+00	0.00E+00	5.38E-07
Sr-93	Curies	0.00E+00	0.00E+00	0.00E+00	0.00E+00
Cs-136	Curies	5.76E-07	0.00E+00	0.00E+00	0.00E+00
Fe-59	Curies	0.00E+00	1.18E-05	0.00E+00	3.89E-06
I-132	Curies	0.00E+00	0.00E+00	6.49E-06	0.00E+00

Zeroes in this table indicates that no radioactivity was present at detectable levels.
See Table 1-4 for typical minimum detectable concentrations.

Table 1-2A

Joseph M Farley Nuclear Plant
RADIOACTIVE EFFLUENT RELEASE REPORT - 2015
Liquid Effluents
Unit: 1
Starting: 1-Jan-2015 Ending: 31-Dec-2015

		Batch Mode			
Nuclides Released	**Unit**	**1ST Quarter**	**2ND Quarter**	**3RD Quarter**	**4TH Quarter**
Pr-146	Curies	0.00E+00	0.00E+00	0.00E+00	0.00E+00
Ni-63	Curies	1.31E-03	8.62E-04	2.69E-04	3.57E-04
Pr-147	Curies	0.00E+00	0.00E+00	0.00E+00	0.00E+00
Co-57	Curies	1.33E-06	0.00E+00	2.01E-07	0.00E+00
Sb-124	Curies	1.47E-05	0.00E+00	0.00E+00	5.39E-06
Se-75	Curies	0.00E+00	0.00E+00	0.00E+00	0.00E+00
I-133	Curies	3.55E-07	0.00E+00	0.00E+00	0.00E+00
Cd-115	Curies	1.12E-06	0.00E+00	0.00E+00	0.00E+00
Np-239	Curies	1.56E-06	0.00E+00	0.00E+00	4.41E-06
Zr-95	Curies	4.30E-04	2.78E-04	4.24E-06	5.27E-05
Mo-101	Curies	1.87E-05	3.50E-05	0.00E+00	2.17E-06
Sn-117M	Curies	1.10E-05	0.00E+00	0.00E+00	0.00E+00
Fe-55	Curies	4.69E-04	1.11E-04	1.41E-05	1.31E-04
Ba-142	Curies	1.70E-05	0.00E+00	0.00E+00	0.00E+00
Ba-133	Curies	0.00E+00	0.00E+00	0.00E+00	0.00E+00
Ba-140	Curies	1.68E-06	0.00E+00	0.00E+00	0.00E+00
Cs-138	Curies	3.56E-05	1.38E-05	1.58E-05	7.93E-05
Ag-108M	Curies	1.36E-06	0.00E+00	3.23E-07	0.00E+00
Sb-125	Curies	4.05E-04	1.22E-04	6.36E-05	7.30E-04
Y-92	Curies	0.00E+00	4.29E-06	0.00E+00	0.00E+00
I-130	Curies	0.00E+00	0.00E+00	0.00E+00	0.00E+00
Be-7	Curies	1.07E-05	0.00E+00	0.00E+00	0.00E+00
Y-88	Curies	0.00E+00	0.00E+00	0.00E+00	0.00E+00
Te-133	Curies	0.00E+00	2.40E-06	0.00E+00	0.00E+00
Ce-141	Curies	1.90E-06	0.00E+00	0.00E+00	0.00E+00
Sr-91	Curies	0.00E+00	2.87E-06	0.00E+00	0.00E+00

Zeroes in this table indicates that no radioactivity was present at detectable levels.
See Table 1-4 for typical minimum detectable concentrations.

Table 1-2A

Joseph M Farley Nuclear Plant
RADIOACTIVE EFFLUENT RELEASE REPORT - 2015
Liquid Effluents
Unit: 1
Starting: 1-Jan-2015 Ending: 31-Dec-2015

		Batch Mode			
Nuclides Released	**Unit**	**1ST Quarter**	**2ND Quarter**	**3RD Quarter**	**4TH Quarter**
Te-134	Curies	2.12E-04	1.02E-04	1.45E-05	0.00E+00
Te-131M	Curies	2.26E-05	4.21E-06	3.13E-06	0.00E+00
Sb-126	Curies	0.00E+00	1.21E-06	0.00E+00	0.00E+00
Nb-95	Curies	8.82E-04	4.90E-04	1.68E-05	1.08E-04
Ru-105	Curies	2.00E-05	1.53E-05	1.94E-06	0.00E+00
Rh-105	Curies	6.52E-04	6.33E-04	0.00E+00	1.42E-04
Hg-203	Curies	0.00E+00	0.00E+00	0.00E+00	0.00E+00
Te-125M	Curies	2.28E-02	2.46E-03	0.00E+00	1.01E-03
Mn-54	Curies	5.15E-05	1.55E-05	0.00E+00	4.20E-06
Zn-65	Curies	9.87E-06	0.00E+00	0.00E+00	7.66E-06
Y-91M	Curies	4.15E-07	0.00E+00	0.00E+00	0.00E+00
Ni-65	Curies	3.73E-05	0.00E+00	0.00E+00	2.77E-05
Y-93	Curies	1.54E-05	0.00E+00	0.00E+00	0.00E+00
I-134	Curies	7.02E-06	8.88E-06	6.39E-07	0.00E+00
Sn-113	Curies	9.13E-06	1.50E-06	0.00E+00	0.00E+00
La-142	Curies	4.96E-06	0.00E+00	0.00E+00	0.00E+00
I-135	Curies	1.79E-05	4.33E-06	0.00E+00	1.42E-05
Tc-99M	Curies	0.00E+00	0.00E+00	1.84E-07	4.03E-07
Total For Period	**Curies**	**3.99E-02**	**9.48E-03**	**8.60E-04**	**4.08E-03**
Tritium					
H-3	Curies	2.02E+02	8.00E+01	1.06E+01	1.35E+02

Zeroes in this table indicates that no radioactivity was present at detectable levels.
See Table 1-4 for typical minimum detectable concentrations.

Table 1-2A

Joseph M Farley Nuclear Plant
RADIOACTIVE EFFLUENT RELEASE REPORT - 2015
Liquid Effluents
Unit: 1
Starting: 1-Jan-2015 Ending: 31-Dec-2015

Nuclides Released	Unit	Batch Mode			
		1ST Quarter	2ND Quarter	3RD Quarter	4TH Quarter
Dissolved And Entrained Gases					
Xe-133	Curies	1.29E-02	1.01E-03	2.79E-05	4.21E-05
Xe-133M	Curies	9.09E-05	0.00E+00	0.00E+00	0.00E+00
Kr-89	Curies	0.00E+00	0.00E+00	0.00E+00	0.00E+00
Kr-85M	Curies	0.00E+00	0.00E+00	0.00E+00	2.61E-07
Ar-41	Curies	0.00E+00	1.08E-06	0.00E+00	1.32E-05
Xe-135	Curies	7.07E-05	0.00E+00	0.00E+00	0.00E+00
Kr-85	Curies	0.00E+00	1.71E-04	0.00E+00	0.00E+00
Kr-88	Curies	6.34E-05	3.88E-05	0.00E+00	7.62E-06
Xe-138	Curies	1.47E-05	0.00E+00	4.26E-06	0.00E+00
Total For Period	**Curies**	**1.31E-02**	**1.22E-03**	**3.22E-05**	**6.33E-05**
Gross Alpha Radioactivity					
No Nuclides Found	Curies	0.00E+00	0.00E+00	0.00E+00	0.00E+00

Zeroes in this table indicates that no radioactivity was present at detectable levels.
See Table 1-4 for typical minimum detectable concentrations.

Table 1-2B

Joseph M Farley Nuclear Plant
RADIOACTIVE EFFLUENT RELEASE REPORT - 2015
Liquid Effluents
Unit: 2
Starting: 1-Jan-2015 Ending: 31-Dec-2015

Nuclides Released	Unit	Continuous Mode			
		1ST Quarter	2ND Quarter	3RD Quarter	4TH Quarter
Fission & Activation Products					
No Nuclides Found	Curies	0.00E+00	0.00E+00	0.00E+00	0.00E+00
Tritium					
No Nuclides Found	Curies	0.00E+00	0.00E+00	0.00E+00	0.00E+00
Dissolved And Entrained Gases					
No Nuclides Found	Curies	0.00E+00	0.00E+00	0.00E+00	0.00E+00
Gross Alpha Radioactivity					
No Nuclides Found	Curies	0.00E+00	0.00E+00	0.00E+00	0.00E+00

Zeroes in this table indicates that no radioactivity was present at detectable levels.
See Table 1-4 for typical minimum detectable concentrations.

Table 1-2B

Joseph M Farley Nuclear Plant
RADIOACTIVE EFFLUENT RELEASE REPORT - 2015
Liquid Effluents
Unit: 2
Starting: 1-Jan-2015 Ending: 31-Dec-2015

Nuclides Released	Unit	Batch Mode			
		1ST Quarter	2ND Quarter	3RD Quarter	4TH Quarter
Fission & Activation Products					
Br-84	Curies	3.84E-06	0.00E+00	0.00E+00	0.00E+00
Ce-141	Curies	0.00E+00	3.91E-06	0.00E+00	0.00E+00
Cr-51	Curies	2.66E-04	1.82E-03	0.00E+00	6.07E-04
Ba-133	Curies	0.00E+00	0.00E+00	0.00E+00	0.00E+00
Cs-136	Curies	6.01E-07	3.87E-07	0.00E+00	5.92E-07
Eu-152	Curies	0.00E+00	0.00E+00	0.00E+00	0.00E+00
Co-57	Curies	0.00E+00	1.27E-06	0.00E+00	8.07E-07
Rh-106	Curies	7.83E-06	0.00E+00	0.00E+00	0.00E+00
I-132	Curies	0.00E+00	0.00E+00	4.97E-07	0.00E+00
Np-239	Curies	5.21E-06	0.00E+00	0.00E+00	0.00E+00
As-76	Curies	0.00E+00	0.00E+00	0.00E+00	0.00E+00
Sn-113	Curies	5.20E-07	7.32E-06	0.00E+00	2.11E-06
Eu-154	Curies	0.00E+00	0.00E+00	0.00E+00	0.00E+00
Ce-139	Curies	1.67E-07	0.00E+00	0.00E+00	0.00E+00
Sn-125	Curies	3.49E-05	1.05E-04	1.59E-05	2.91E-05
Fe-55	Curies	3.21E-04	4.55E-04	4.78E-05	1.23E-04
Te-133M	Curies	1.01E-05	0.00E+00	0.00E+00	8.83E-06
Ni-65	Curies	1.47E-05	1.55E-04	0.00E+00	3.48E-05
La-140	Curies	0.00E+00	0.00E+00	1.11E-06	5.37E-06
Ba-141	Curies	1.14E-05	2.45E-05	0.00E+00	0.00E+00
Ru-105	Curies	2.78E-05	2.92E-05	1.65E-06	1.24E-05
Br-82	Curies	4.34E-06	4.98E-06	1.53E-06	2.13E-06
Zn-65	Curies	3.83E-06	3.82E-05	0.00E+00	4.33E-06
Y-93	Curies	3.87E-06	0.00E+00	3.72E-06	2.25E-05
Ba-142	Curies	2.69E-05	6.56E-06	0.00E+00	0.00E+00

Zeroes in this table indicates that no radioactivity was present at detectable levels.
See Table 1-4 for typical minimum detectable concentrations.

Table 1-2B

Joseph M Farley Nuclear Plant
RADIOACTIVE EFFLUENT RELEASE REPORT - 2015
Liquid Effluents
Unit: 2
Starting: 1-Jan-2015 Ending: 31-Dec-2015

		Batch Mode			
Nuclides Released	**Unit**	**1ST Quarter**	**2ND Quarter**	**3RD Quarter**	**4TH Quarter**
Y-91M	Curies	0.00E+00	6.92E-06	6.84E-07	0.00E+00
W-187	Curies	0.00E+00	2.06E-05	1.16E-06	0.00E+00
Ce-146	Curies	0.00E+00	2.46E-06	0.00E+00	0.00E+00
Ru-106	Curies	7.83E-06	0.00E+00	0.00E+00	0.00E+00
Pr-147	Curies	0.00E+00	0.00E+00	0.00E+00	0.00E+00
Y-92	Curies	0.00E+00	0.00E+00	0.00E+00	2.63E-06
Ni-63	Curies	6.07E-04	2.98E-03	1.10E-03	7.81E-04
Zr-95	Curies	2.94E-04	5.39E-04	2.08E-05	1.04E-04
Sb-125	Curies	3.09E-04	9.91E-04	1.88E-04	2.46E-03
I-135	Curies	0.00E+00	0.00E+00	6.47E-06	0.00E+00
Mn-56	Curies	0.00E+00	0.00E+00	0.00E+00	6.43E-07
I-130	Curies	0.00E+00	0.00E+00	0.00E+00	0.00E+00
Tc-101	Curies	0.00E+00	0.00E+00	1.62E-07	0.00E+00
Sb-126	Curies	7.75E-07	0.00E+00	0.00E+00	5.61E-07
Sr-89	Curies	2.20E-05	0.00E+00	0.00E+00	0.00E+00
Sb-124	Curies	3.18E-06	3.60E-05	5.30E-07	2.76E-05
Te-131M	Curies	2.53E-06	1.73E-05	2.22E-06	0.00E+00
Co-58	Curies	1.97E-03	1.11E-02	5.68E-04	1.80E-03
Cs-138	Curies	3.58E-05	2.48E-04	1.02E-04	7.15E-05
Mo-101	Curies	3.49E-05	2.82E-05	0.00E+00	2.46E-05
Ni-56	Curies	0.00E+00	0.00E+00	0.00E+00	0.00E+00
Ag-108M	Curies	5.88E-07	3.97E-06	3.34E-07	0.00E+00
Te-134	Curies	3.33E-05	1.09E-04	1.67E-04	0.00E+00
Co-60	Curies	1.38E-03	6.07E-03	1.04E-03	8.91E-04
Ba-140	Curies	0.00E+00	0.00E+00	1.81E-06	0.00E+00
I-131	Curies	2.11E-06	0.00E+00	0.00E+00	0.00E+00

Zeroes in this table indicates that no radioactivity was present at detectable levels.
See Table 1-4 for typical minimum detectable concentrations.

Table 1-2B

Joseph M Farley Nuclear Plant
RADIOACTIVE EFFLUENT RELEASE REPORT - 2015
Liquid Effluents
Unit: 2
Starting: 1-Jan-2015 Ending: 31-Dec-2015

		Batch Mode			
Nuclides Released	**Unit**	**1ST Quarter**	**2ND Quarter**	**3RD Quarter**	**4TH Quarter**
Tritium					
H-3	Curies	1.28E+02	1.91E+02	2.44E+01	1.86E+02
Dissolved And Entrained Gases					
Xe-127	Curies	0.00E+00	0.00E+00	0.00E+00	0.00E+00
Xe-135M	Curies	0.00E+00	2.77E-06	0.00E+00	0.00E+00
Kr-89	Curies	0.00E+00	0.00E+00	0.00E+00	0.00E+00
Xe-133	Curies	1.02E-02	1.04E-03	2.55E-05	5.53E-05
Xe-131M	Curies	0.00E+00	8.18E-05	0.00E+00	0.00E+00
Kr-85M	Curies	0.00E+00	4.49E-07	0.00E+00	0.00E+00
Xe-135	Curies	7.82E-05	0.00E+00	0.00E+00	1.28E-06
Kr-87	Curies	0.00E+00	0.00E+00	0.00E+00	1.33E-06
Kr-88	Curies	3.09E-05	5.26E-05	7.95E-07	1.47E-05
Xe-133M	Curies	9.14E-05	0.00E+00	0.00E+00	3.05E-06
Ar-41	Curies	0.00E+00	2.86E-06	0.00E+00	5.26E-06
Xe-138	Curies	5.22E-06	8.53E-06	4.12E-06	0.00E+00
Total For Period	**Curies**	**1.04E-02**	**1.19E-03**	**3.04E-05**	**8.09E-05**
Gross Alpha Radioactivity					
No Nuclides Found	Curies	0.00E+00	0.00E+00	0.00E+00	0.00E+00

Zeroes in this table indicates that no radioactivity was present at detectable levels.
See Table 1-4 for typical minimum detectable concentrations.

Table 1-2C

Joseph M Farley Nuclear Plant
RADIOACTIVE EFFLUENT RELEASE REPORT - 2015
Liquid Effluents
Unit: Site
Starting: 1-Jan-2015 Ending: 31-Dec-2015

Nuclides Released	Unit	Continuous Mode			
		1ST Quarter	2ND Quarter	3RD Quarter	4TH Quarter
Fission & Activation Products					
No Nuclides Found	Curies	0.00E+00	0.00E+00	0.00E+00	0.00E+00
Tritium					
No Nuclides Found	Curies	0.00E+00	0.00E+00	0.00E+00	0.00E+00
Dissolved And Entrained Gases					
No Nuclides Found	Curies	0.00E+00	0.00E+00	0.00E+00	0.00E+00
Gross Alpha Radioactivity					
No Nuclides Found	Curies	0.00E+00	0.00E+00	0.00E+00	0.00E+00

Zeroes in this table indicates that no radioactivity was present at detectable levels.
See Table 1-4 for typical minimum detectable concentrations.

Table 1-2C

Joseph M Farley Nuclear Plant
RADIOACTIVE EFFLUENT RELEASE REPORT - 2015
Liquid Effluents
Unit: Site
Starting: 1-Jan-2015 Ending: 31-Dec-2015

Nuclides Released	Unit	Batch Mode			
		1ST Quarter	2ND Quarter	3RD Quarter	4TH Quarter
Fission & Activation Products					
Ba-140	Curies	1.68E-06	0.00E+00	1.81E-06	0.00E+00
Tc-101	Curies	0.00E+00	0.00E+00	1.62E-07	0.00E+00
Rb-89	Curies	0.00E+00	0.00E+00	1.24E-06	0.00E+00
Rh-106	Curies	7.83E-06	0.00E+00	0.00E+00	0.00E+00
Tc-99M	Curies	0.00E+00	0.00E+00	1.84E-07	4.03E-07
Mo-99	Curies	5.81E-06	8.66E-06	1.11E-05	7.71E-06
Sn-113	Curies	9.65E-06	8.82E-06	0.00E+00	2.11E-06
Cr-51	Curies	1.72E-03	3.05E-03	0.00E+00	8.77E-04
Sn-117M	Curies	1.10E-05	0.00E+00	0.00E+00	0.00E+00
Pr-146	Curies	0.00E+00	0.00E+00	0.00E+00	0.00E+00
Sr-92	Curies	0.00E+00	0.00E+00	1.06E-06	0.00E+00
Co-58	Curies	9.63E-03	1.28E-02	7.40E-04	2.39E-03
Cs-138	Curies	7.14E-05	2.62E-04	1.18E-04	1.51E-04
I-135	Curies	1.79E-05	4.33E-06	6.47E-06	1.42E-05
Br-82	Curies	7.13E-06	4.98E-06	1.53E-06	2.13E-06
Ce-139	Curies	1.67E-07	0.00E+00	0.00E+00	0.00E+00
Eu-154	Curies	0.00E+00	0.00E+00	0.00E+00	0.00E+00
Sr-85	Curies	0.00E+00	0.00E+00	0.00E+00	0.00E+00
Ce-144	Curies	8.88E-06	0.00E+00	0.00E+00	0.00E+00
Be-7	Curies	1.07E-05	0.00E+00	0.00E+00	0.00E+00
Te-132	Curies	0.00E+00	0.00E+00	0.00E+00	5.38E-07
Nb-95	Curies	1.50E-03	1.60E-03	9.10E-05	3.18E-04
Sr-91	Curies	0.00E+00	2.87E-06	2.97E-06	0.00E+00
Rb-86	Curies	4.81E-06	0.00E+00	0.00E+00	0.00E+00
Te-125M	Curies	4.20E-02	5.38E-03	0.00E+00	5.80E-03

Zeroes in this table indicates that no radioactivity was present at detectable levels.
See Table 1-4 for typical minimum detectable concentrations.

Table 1-2C

Joseph M Farley Nuclear Plant
RADIOACTIVE EFFLUENT RELEASE REPORT - 2015
Liquid Effluents
Unit: Site
Starting: 1-Jan-2015 Ending: 31-Dec-2015

		Batch Mode			
Nuclides Released	**Unit**	**1ST Quarter**	**2ND Quarter**	**3RD Quarter**	**4TH Quarter**
Co-57	Curies	1.33E-06	1.27E-06	2.01E-07	8.07E-07
Mn-54	Curies	7.87E-05	1.30E-04	2.73E-06	1.38E-05
Y-91M	Curies	4.15E-07	6.92E-06	6.84E-07	0.00E+00
Ba-142	Curies	4.39E-05	6.56E-06	0.00E+00	0.00E+00
Zr-95	Curies	7.24E-04	8.17E-04	2.50E-05	1.57E-04
Sr-89	Curies	2.20E-05	0.00E+00	0.00E+00	0.00E+00
Sb-126	Curies	7.75E-07	1.21E-06	0.00E+00	5.61E-07
Y-88	Curies	0.00E+00	0.00E+00	0.00E+00	0.00E+00
Te-133M	Curies	1.01E-05	2.45E-05	0.00E+00	1.25E-05
Ba-141	Curies	1.14E-05	2.45E-05	0.00E+00	0.00E+00
Np-239	Curies	6.77E-06	0.00E+00	0.00E+00	4.41E-06
Eu-152	Curies	0.00E+00	0.00E+00	0.00E+00	0.00E+00
Nd-149	Curies	0.00E+00	4.25E-06	0.00E+00	0.00E+00
Nb-97	Curies	1.95E-05	2.10E-05	1.30E-06	2.51E-06
Co-60	Curies	4.33E-03	7.38E-03	1.30E-03	1.31E-03
I-132	Curies	0.00E+00	0.00E+00	6.99E-06	0.00E+00
Y-93	Curies	1.93E-05	0.00E+00	3.72E-06	2.25E-05
Hf-181	Curies	0.00E+00	0.00E+00	1.29E-06	0.00E+00
Cd-115	Curies	1.12E-06	0.00E+00	0.00E+00	0.00E+00
La-142	Curies	4.96E-06	0.00E+00	0.00E+00	0.00E+00
Y-94	Curies	0.00E+00	0.00E+00	0.00E+00	2.12E-06
Y-95	Curies	0.00E+00	1.02E-04	6.57E-06	0.00E+00
Ce-141	Curies	1.90E-06	3.91E-06	0.00E+00	0.00E+00
Te-134	Curies	2.45E-04	2.11E-04	1.82E-04	0.00E+00
Eu-152M	Curies	0.00E+00	0.00E+00	0.00E+00	0.00E+00
Y-92	Curies	0.00E+00	4.29E-06	0.00E+00	2.63E-06

Zeroes in this table indicates that no radioactivity was present at detectable levels.
See Table 1-4 for typical minimum detectable concentrations.

Table 1-2C

Joseph M Farley Nuclear Plant
RADIOACTIVE EFFLUENT RELEASE REPORT - 2015
Liquid Effluents
Unit: Site
Starting: 1-Jan-2015 Ending: 31-Dec-2015

		Batch Mode			
Nuclides Released	**Unit**	**1ST Quarter**	**2ND Quarter**	**3RD Quarter**	**4TH Quarter**
Fe-59	Curies	6.20E-06	1.98E-05	0.00E+00	1.05E-05
I-130	Curies	0.00E+00	0.00E+00	0.00E+00	0.00E+00
Ag-108M	Curies	1.94E-06	3.97E-06	6.57E-07	0.00E+00
Sn-125	Curies	5.40E-05	1.12E-04	1.59E-05	6.94E-05
Mo-101	Curies	5.36E-05	6.32E-05	0.00E+00	2.68E-05
Ba-133	Curies	0.00E+00	0.00E+00	0.00E+00	0.00E+00
Fe-55	Curies	7.90E-04	5.65E-04	6.19E-05	2.55E-04
Te-131M	Curies	2.51E-05	2.15E-05	5.36E-06	0.00E+00
Sr-93	Curies	0.00E+00	0.00E+00	0.00E+00	0.00E+00
Cs-137	Curies	9.71E-06	9.31E-07	1.83E-05	3.36E-05
Rh-105	Curies	7.95E-04	1.50E-03	3.23E-07	4.50E-04
Cs-136	Curies	1.18E-06	3.87E-07	0.00E+00	5.92E-07
Ni-65	Curies	5.20E-05	1.55E-04	0.00E+00	6.25E-05
I-131	Curies	2.11E-06	0.00E+00	0.00E+00	0.00E+00
Te-133	Curies	0.00E+00	2.40E-06	0.00E+00	0.00E+00
Ni-56	Curies	0.00E+00	0.00E+00	0.00E+00	0.00E+00
Sb-124	Curies	1.79E-05	3.60E-05	5.30E-07	3.30E-05
Sb-125	Curies	7.14E-04	1.11E-03	2.52E-04	3.19E-03
Ru-105	Curies	4.78E-05	4.45E-05	3.59E-06	1.24E-05
As-76	Curies	0.00E+00	0.00E+00	0.00E+00	0.00E+00
Ag-110M	Curies	3.01E-05	1.19E-05	1.62E-06	1.23E-05
Ce-146	Curies	0.00E+00	2.46E-06	0.00E+00	0.00E+00
Zn-65	Curies	1.37E-05	3.82E-05	0.00E+00	1.20E-05
Hg-203	Curies	0.00E+00	0.00E+00	0.00E+00	0.00E+00
Pm-149	Curies	7.31E-06	0.00E+00	0.00E+00	0.00E+00
La-140	Curies	0.00E+00	0.00E+00	1.11E-06	5.37E-06

Zeroes in this table indicates that no radioactivity was present at detectable levels.
See Table 1-4 for typical minimum detectable concentrations.

Table 1-2C

Joseph M Farley Nuclear Plant
RADIOACTIVE EFFLUENT RELEASE REPORT - 2015
Liquid Effluents
Unit: Site
Starting: 1-Jan-2015 Ending: 31-Dec-2015

		Batch Mode			
Nuclides Released	**Unit**	**1ST Quarter**	**2ND Quarter**	**3RD Quarter**	**4TH Quarter**
Br-84	Curies	3.84E-06	0.00E+00	0.00E+00	0.00E+00
Ta-182	Curies	4.40E-06	0.00E+00	0.00E+00	0.00E+00
Mn-56	Curies	0.00E+00	0.00E+00	0.00E+00	6.43E-07
Eu-155	Curies	0.00E+00	0.00E+00	0.00E+00	0.00E+00
Ba-139	Curies	6.27E-07	0.00E+00	0.00E+00	0.00E+00
Ru-106	Curies	7.83E-06	0.00E+00	0.00E+00	0.00E+00
Ni-63	Curies	1.92E-03	3.84E-03	1.37E-03	1.14E-03
I-134	Curies	7.82E-06	8.88E-06	4.81E-06	1.07E-05
Se-75	Curies	0.00E+00	0.00E+00	0.00E+00	0.00E+00
Pr-147	Curies	0.00E+00	0.00E+00	0.00E+00	0.00E+00
W-187	Curies	0.00E+00	2.06E-05	1.16E-06	0.00E+00
I-133	Curies	3.55E-07	0.00E+00	0.00E+00	0.00E+00
Total For Period	**Curies**	**6.58E-02**	**3.96E-02**	**4.33E-03**	**1.66E-02**
Tritium					
H-3	Curies	3.30E+02	2.71E+02	3.51E+01	3.21E+02

Zeroes in this table indicates that no radioactivity was present at detectable levels.
See Table 1-4 for typical minimum detectable concentrations.

Table 1-2C

Joseph M Farley Nuclear Plant
RADIOACTIVE EFFLUENT RELEASE REPORT - 2015
Liquid Effluents
Unit: Site
Starting: 1-Jan-2015 Ending: 31-Dec-2015

Nuclides Released	Unit	Batch Mode			
		1ST Quarter	2ND Quarter	3RD Quarter	4TH Quarter
Dissolved And Entrained Gases					
Xe-133M	Curies	1.82E-04	0.00E+00	0.00E+00	3.05E-06
Kr-85M	Curies	0.00E+00	4.49E-07	0.00E+00	2.61E-07
Xe-135M	Curies	0.00E+00	2.77E-06	0.00E+00	0.00E+00
Xe-138	Curies	1.99E-05	8.53E-06	8.38E-06	0.00E+00
Xe-133	Curies	2.31E-02	2.04E-03	5.35E-05	9.74E-05
Ar-41	Curies	0.00E+00	3.94E-06	0.00E+00	1.85E-05
Kr-87	Curies	0.00E+00	0.00E+00	0.00E+00	1.33E-06
Xe-131M	Curies	0.00E+00	8.18E-05	0.00E+00	0.00E+00
Xe-127	Curies	0.00E+00	0.00E+00	0.00E+00	0.00E+00
Kr-89	Curies	0.00E+00	0.00E+00	0.00E+00	0.00E+00
Kr-85	Curies	0.00E+00	1.71E-04	0.00E+00	0.00E+00
Kr-88	Curies	9.43E-05	9.14E-05	7.95E-07	2.23E-05
Xe-135	Curies	1.49E-04	0.00E+00	0.00E+00	1.28E-06
Total For Period	**Curies**	**2.35E-02**	**2.40E-03**	**6.27E-05**	**1.44E-04**
Gross Alpha Radioactivity					
No Nuclides Found	Curies	0.00E+00	0.00E+00	0.00E+00	0.00E+00

Zeroes in this table indicates that no radioactivity was present at detectable levels.
See Table 1-4 for typical minimum detectable concentrations.

Table 1-3B
Table 1-3A

Joseph M Farley Nuclear Plant
RADIOACTIVE EFFLUENT RELEASE REPORT - 2015
Doses to a member of the public due to Liquid Releases
Unit: 1
Starting: 1-Jan-2015 Ending: 31-Dec-2015

Cumulative Doses Per Quarter

Organ	ODCM Lmt	Units	1ST Qtr	% ODCM	2ND Qtr	% ODCM	3RD Qtr	% ODCM	4TH Qtr	% ODCM
Kidney	5.00E+00	mRem	4.27E-02	8.55E-01	3.98E-03	7.97E-02	1.07E-04	2.14E-03	3.37E-03	6.74E-02
Thyroid	5.00E+00	mRem	5.44E-03	1.09E-01	1.10E-03	2.20E-02	1.06E-04	2.12E-03	1.62E-03	3.24E-02
Bone	5.00E+00	mRem	1.21E-02	2.41E-01	1.96E-03	3.91E-02	3.31E-04	6.63E-03	1.05E-03	2.09E-02
Total Body	5.00E+00	mRem	4.12E-03	8.23E-02	1.09E-03	2.17E-02	1.28E-04	2.56E-03	1.61E-03	3.22E-02
Total Body	1.50E+00	mRem	4.12E-03	2.74E-01	1.09E-03	7.24E-02	1.28E-04	8.54E-03	1.61E-03	1.07E-01
GI-Lli	5.00E+00	mRem	4.46E-02	8.93E-01	4.81E-03	9.63E-02	2.31E-04	4.62E-03	3.91E-03	7.82E-02
Lung	5.00E+00	mRem	4.76E-03	9.53E-02	1.49E-03	2.97E-02	2.97E-02	7.16E-03	5.22E-03	1.04E-01
Liver	5.00E+00	mRem	6.42E-03	1.28E-01	1.29E-03	2.58E-02	1.36E-04	2.72E-03	1.75E-03	3.49E-02

Cumulative Doses per Year

Organ	ODCM Lmt	Units	Year to Ending Date	% ODCM	Receptor	Limit
Lung	1.00E+01	mRem	1.18E-02	1.18E-01	Maximum Individual Liquid	Liquid Effluent Organ Annual
GI-Lli	1.00E+01	mRem	5.36E-02	5.36E-01	Maximum Individual Liquid	Liquid Effluent Organ Annual
Liver	1.00E+01	mRem	9.59E-03	9.59E-02	Maximum Individual Liquid	Liquid Effluent Organ Annual
Total Body	3.00E+00	mRem	6.94E-03	2.31E-01	Maximum Individual Liquid	Liquid Effluent TB Annual
Total Body	1.00E+01	mRem	6.94E-03	6.94E-02	Maximum Individual Liquid	Liquid Effluent Organ Annual
Bone	1.00E+01	mRem	1.54E-02	1.54E-01	Maximum Individual Liquid	Liquid Effluent Organ Annual
Thyroid	1.00E+01	mRem	8.27E-03	8.27E-02	Maximum Individual Liquid	Liquid Effluent Organ Annual
Kidney	1.00E+01	mRem	5.02E-02	5.02E-01	Maximum Individual Liquid	Liquid Effluent Organ Annual

Joseph M Farley Nuclear Plant
RADIOACTIVE EFFLUENT RELEASE REPORT - 2015
Doses to a member of the public due to Liquid Releases
Unit: 2
Starting: 1-Jan-2015 Ending: 31-Dec-2015

Cumulative Doses Per Quarter

Organ	ODCM Lmt	Units	1ST Qtr	% ODCM	2ND Qtr	% ODCM	3RD Qtr	% ODCM	4TH Qtr	% ODCM
Lung	5.00E+00	mRem	3.17E-03	6.34E-02	6.90E-03	1.38E-01	1.23E-03	2.45E-02	1.17E-02	2.34E-01
Total Body	5.00E+00	mRem	2.66E-03	5.32E-02	2.66E-03	5.32E-02	3.80E-04	7.60E-03	2.04E-03	4.08E-02
Total Body	1.50E+00	mRem	2.66E-03	1.77E-01	2.66E-03	1.77E-01	3.80E-04	2.53E-02	2.04E-03	1.36E-01
Bone	5.00E+00	mRem	8.77E-03	1.75E-01	5.09E-03	1.02E-01	1.52E-03	3.04E-02	2.62E-03	5.24E-02
GI-Lli	5.00E+00	mRem	3.35E-02	6.71E-01	1.03E-02	2.05E-01	7.81E-04	1.56E-02	9.33E-03	1.87E-01
Thyroid	5.00E+00	mRem	3.84E-03	7.67E-02	2.34E-03	4.69E-02	2.66E-04	5.31E-03	2.18E-03	4.36E-02
Liver	5.00E+00	mRem	4.48E-03	8.96E-02	2.92E-03	5.84E-02	4.24E-04	8.49E-03	2.41E-03	4.83E-02
Kidney	5.00E+00	mRem	3.31E-02	6.62E-01	6.36E-03	1.27E-01	2.77E-04	5.53E-03	8.09E-03	1.62E-01

Cumulative Doses per Year

Organ	ODCM Lmt	Units	Year to Ending Date	% ODCM	Receptor	Limit
GI-Lli	1.00E+01	mRem	5.39E-02	5.39E-01	Maximum Individual Liquid	Liquid Effluent Organ Annual
Bone	1.00E+01	mRem	1.80E-02	1.80E-01	Maximum Individual Liquid	Liquid Effluent Organ Annual
Kidney	1.00E+01	mRem	4.78E-02	4.78E-01	Maximum Individual Liquid	Liquid Effluent Organ Annual
Liver	1.00E+01	mRem	1.02E-02	1.02E-01	Maximum Individual Liquid	Liquid Effluent Organ Annual
Thyroid	1.00E+01	mRem	8.62E-03	8.62E-02	Maximum Individual Liquid	Liquid Effluent Organ Annual
Total Body	3.00E+00	mRem	7.74E-03	2.58E-01	Maximum Individual Liquid	Liquid Effluent TB Annual
Total Body	1.00E+01	mRem	7.74E-03	7.74E-02	Maximum Individual Liquid	Liquid Effluent Organ Annual
Lung	1.00E+01	mRem	2.30E-02	2.30E-01	Maximum Individual Liquid	Liquid Effluent Organ Annual

TABLE 1-4
Joseph M. Farley Nuclear Plant
ANNUAL RADIOACTIVE EFFLUENT RELEASE REPORT - 2015
MINIMUM DETECTABLE CONCENTRATION - LIQUID SAMPLE ANALYSES

The values in this table represent a priori Minimum Detectable Concentrations (MDC) that are typically achieved in laboratory analyses of liquid radwaste samples.

Nuclide	MDC(µCi/ML)
MN-54	4.47E-08
CO-58	3.47E-08
FE-59	2.88E-08
CO-60	5.89E-08
ZN-65	1.12E-07
MO-99	2.64E-07
I-131	3.33E-08
CS-134	2.75E-08
CS-137	5.00E-08
CE-141	3.84E-08
CE-144	2.32E-07

Table 1-5A

Joseph M Farley Nuclear Plant
RADIOACTIVE EFFLUENT RELEASE REPORT - 2015
Liquid Effluents - Batch Release Summary
Unit: 1
Starting: 1-Jan-2015 Ending: 31-Dec-2015

Liquid Releases	Units	1ST Quarter	2ND Quarter	3RD Quarter	4TH Quarter	Year Totals
1. Number of batch releases		130	93	40	55	318
2. Total time period for Batch releases	(Minutes)	1.34E+04	9.95E+03	4.28E+03	5.90E+03	3.35E+04
3. Maximum time period for a batch release	(Minutes)	1.98E+02	2.00E+02	1.20E+02	1.31E+02	2.00E+02
4. Average time period for a batch release	(Minutes)	1.03E+02	1.07E+02	1.07E+02	1.07E+02	1.05E+02
5. Minimum time period for a batch release	(Minutes)	8.60E+01	5.00E+01	7.80E+01	6.70E+01	
6. Average stream flow during periods						
5.00E+01of release of liquid effluent into a flowing stream *	(CFS)	1.31E+04	1.30E+04	4.25E+03	4.39E+03	8.69E+03

*Average River Flow Rate, taken at Walter F. George Lock and Dam, located 30.7 miles above Farley Nuclear Plant.

Table 1-5B

Joseph M Farley Nuclear Plant
RADIOACTIVE EFFLUENT RELEASE REPORT - 2015
Liquid Effluents - Batch Release Summary
Unit: 2
Starting: 1-Jan-2015 Ending: 31-Dec-2015

Liquid Releases	Units	1ST Quarter	2ND Quarter	3RD Quarter	4TH Quarter	Year Totals
1. Number of batch releases		116	150	109	116	491
2. Total time period for Batch releases	(Minutes)	1.15E+04	1.52E+04	1.13E+04	1.23E+04	5.04E+04
3. Maximum time period for a batch release	(Minutes)	2.20E+02	1.50E+02	1.40E+02	1.40E+02	2.20E+02
4. Average time period for a batch release	(Minutes)	9.94E+01	1.01E+02	1.04E+02	1.06E+02	1.03E+02
5. Minimum time period for a batch release	(Minutes)	3.00E+00	1.00E+00	7.50E+01	8.50E+01	1.00E+00
6. Average stream flow during periods of release of liquid effluent into a flowing stream *	(CFS)	8.97E+03	8.62E+03	3.71E+03	1.55E+04	9.20E+03

*Average River Flow Rate, taken at Walter F. George Lock and Dam, located 30.7 miles above Farley Nuclear Plant.

Table 1-6A
Joseph M Farley Nuclear Plant
RADIOACTIVE EFFLUENT RELEASE REPORT - 2015
Liquid Effluents - Abnormal Release Summary
Unit: 1
Starting: 1-Jan- 2015 Ending: 31-Dec-2015

Liquid Releases	Units	1ST Quarter	2ND Quarter	3RD Quarter	4TH Quarter	Year Totals
1. Number of Releases		0	0	0	0	0
2. Total Time For All Releases	(Minutes)	0.00E+00	0.00E+00	0.00E+00	0.00E+00	0.00E+00
3. Maximum Time For A Release	(Minutes)	0.00E+00	0.00E+00	0.00E+00	0.00E+00	0.00E+00
4. Average Time For A Release	(Minutes)	0.00E+00	0.00E+00	0.00E+00	0.00E+00	0.00E+00
5. Minimum Time For A Release	(Minutes)	0.00E+00	0.00E+00	0.00E+00	0.00E+00	0.00E+00
6. Total activity for all releases	(Curies)	0.00E+00	0.00E+00	0.00E+00	0.00E+00	0.00E+00

Table 1-6B

Joseph M Farley Nuclear Plant
RADIOACTIVE EFFLUENT RELEASE REPORT - 2015
Liquid Effluents - Abnormal Release Summary
Unit: 2

Starting: 1-Jan-2015 Ending: 31-Dec-2015

Liquid Releases	Units	1ST Quarter	2ND Quarter	3RD Quarter	4TH Quarter	Year Totals
1. Number of Releases		0	0	0	0	0
2. Total Time For All Releases	(Minutes)	0.00E+00	0.00E+00	0.00E+00	0.00E+00	0.00E+00
3. Maximum Time For A Release	(Minutes)	0.00E+00	0.00E+00	0.00E+00	0.00E+00	0.00E+00
4. Average Time For A Release	(Minutes)	0.00E+00	0.00E+00	0.00E+00	0.00E+00	0.00E+00
5. Minimum Time For A Release	(Minutes)	0.00E+00	0.00E+00	0.00E+00	0.00E+00	0.00E+00
6. Total activity for all releases	(Curies)	0.00E+00	0.00E+00	0.00E+00	0.00E+00	0.00E+00

2.0 GASEOUS EFFLUENTS

This section contains applicable ODCM limits for gaseous effluents as well as the quantities of radioactive gaseous effluents released during 2013. These quantities are summarized on a quarterly basis and include any unplanned releases. Tabulations are provided of the offsite air doses calculated in accordance with ODCM 3.4.2 to show conformance with the limits of ODCM 3.1.3, and the offsite organ doses to a member of the public calculated in accordance with ODCM 3.4.3 to show conformance with ODCM 3.1.4.

2.1 Regulatory Requirements

The requirements presented in this section are for Unit 1 and Unit 2.

2.1.1 Dose Rate Limits

The dose rates due to radioactive materials released in gaseous effluents from the site to areas at and beyond the SITE BOUNDARY shall be limited to the following:

a. For noble gases: Less than or equal to 500 mrem/yr. to the whole body and less than or equal to 3000 mrem/yr. to the skin, and

b. For Iodine-131, Iodine-133,tritium and for all radionuclides in particulate form with half-lives greater than 8 days: Less than or equal to 1500 mrem/yr. to any organ.

2.1.2 Air Doses Due to Noble Gases in Gaseous Releases

Technical Specifications 5.5.4.e and 5.5.4.h state that the air dose due to noble gases released in gaseous effluents, from each reactor unit, to areas at and beyond the SITE BOUNDARY (see ODCM Figure 10-1) shall be limited to the following:

a. During any calendar quarter: Less than or equal to 5 mrad for gamma radiation and less than or equal to 10 mrad for beta radiation, and

b. During any calendar year: Less than or equal to 10 mrad for gamma radiation and less than or equal to 20 mrad for beta radiation.

2.1.3 Doses to a Member of the Public

Technical Specifications 5.5.4.e and 5.5.4.i state that the dose to a MEMBER OF THE PUBLIC from I-131, I-133, tritium, and all radionuclides in particulate form with half-lives greater than 8 days in gaseous effluents released, from each reactor unit, to areas at and beyond the SITE BOUNDARY (see ODCM Figure 10-1) shall be limited to the following:

a. During any calendar quarter: Less than or equal to 7.5 mrem to any organ, and

b. During any calendar year: Less than or equal to 15 mrem to any organ.

2.2 Measurements and Approximation of Total Radioactivity

The following noble gases are specifically considered in evaluating gaseous effluents:

KR-87	XE-133
KR-88	XE-135
XE-133M	XE-138

The following radioiodines and radioactive materials in particulate form are specifically considered in evaluating gaseous effluents:

MN-54	MO-99
FE-59	I-131
CO-58	CS-134
CO-60	CS-137
ZN-65	CE-141
SR-89	CE-144
SR-90	H-3

2.2.1 Sample collection and Analysis

Periodic grab samples from plant effluent streams are analyzed by a computerized pulse height analyzer system utilizing high resolution germanium detectors. Samples are obtained and analyzed in accordance with ODCM Table 3-3. Isotopic values thus obtained are used for release rate calculations as specified in ODCM 3.4.2 and ODCM 3.4.3. Only those nuclides which are detected are used in calculations. For radioiodines and particulates, in addition to the nuclides listed above other nuclides with half-lives greater than 8 days which are identified are also considered.

Continuous Releases: Continuous sampling is performed on the continuous release points (i.e. the Plant Vent Stack, Containment Purge when in continuous mode, and the Turbine Building Vent). Particulate material is collected by filtration. At least weekly, these filters are removed and analyzed on the pulse height analyzer to identify and quantify radioactive materials collected on the filters. Particulate filters are then analyzed for gross alpha and strontium as required. All gross alpha, Sr-89 and Sr-90 samples are sent offsite to the Georgia Power Environmental Laboratory for analysis.

Batch Releases: The processing of batch type releases (from Containment when in batch mode, or Waste Gas Decay Tanks) is analogous to continuous releases, except that the release is not commenced until samples have been obtained and analyzed. Containment Purge batch releases were commenced at FNP beginning in 2006 in order to take advantage of additional decay time for short lived radionuclides.

Typically achieved minimum detectable concentrations for gaseous effluent sample analyses are reported in Table 2-6.

2.2.2 Total Quantities of Radioactivity, Dose Rates, and Cumulative Doses

The methods for determining release quantities of radioactivity, dose rates, and cumulative doses follow:

2.2.2.1 Fission and Activation Gases

The released radioactivity is determined using sample analyses results collected as described in section 2.2.1 and the average release flow rates over the period represented by the collected sample.

Dose rates due to noble gases, radioiodines, tritium, and particulates are calculated (with computer assistance). The calculated dose rates are compared to the dose rate limits specified in ODCM 3.1.2 for noble gases, radioiodine, tritium, and particulates. Dose rate calculation methodology is presented in the ODCM.

Beta and gamma air doses due to noble gases are calculated for the location in the unrestricted area with the potential for the highest exposure due to gaseous releases. Air doses are calculated for each release period and cumulative totals are kept for each unit for the calendar quarter and year. Cumulative air doses are compared to the dose limits specified in ODCM 3.1.3. The current percent of the ODCM limits are shown on the printout for each release period. Air dose calculation methodology is presented in the ODCM.

2.2.2.2 Radioiodine, Tritium, and Particulate Releases

Released quantities of radioiodines are determined using the weekly samples and release flow rates for the applicable release points. Radioiodine concentrations are determined by gamma spectroscopy.

Release quantities of particulates are determined using the weekly (filter) samples and release flow rates for the applicable release points. Gamma spectroscopy is used to quantify the concentrations of principal gamma emitters.

After each quarter, the particulate filters from each applicable vent (plant vent stack and containment purge) are combined, fused, and a strontium separation is performed. Since sample flows and vent flows are almost constant over each quarterly period the filters from each vent can be dissolved together. Decay corrections are performed back to the middle of the quarterly collection period. If Sr-89 or Sr-90 is not detected, MDCs are calculated. Strontium concentrations are input into the composite file of the computer and used for release dose rate and individual dose calculations.

Tritium samples are obtained monthly from the Plant Vent Stack, the Containment Purge when in batch mode, and the Turbine Building Vent (and weekly for Containment Purge when in continuous mode) by passing the sample stream through a cold trap or by using the bubble method. The grams of water vapor/cubic meter are measured upstream of the cold trap in order to alleviate the difficulties in determining water vapor collection efficiencies. The tritium samples are analyzed onsite and the results furnished in μCi/ml of water. The tritium concentration in water is converted to the tritium concentration in air and this value is input into the composite file of the computer and used in release, dose rate, and individual dose calculations.

Dose rates due to radioiodine, tritium and particulates are calculated for a hypothetical child exposed to the inhalation pathway at the location in the unrestricted area where the potential dose rate is expected to be the highest. Dose rates are calculated, for each release point for each release

period, and the dose rates from each release point is compared to the dose rate limits specified in ODCM 3.1.2, allocated for each release point as described in ODCM 3.3.2.

Doses to a Member of the Public (individual doses) due to radioiodine, tritium and particulates are calculated for the controlling receptor, which is described in the ODCM. Individual doses are calculated for each release period, and cumulative totals are kept for each unit, for the current calendar quarter and year. Cumulative individual doses are compared to the dose limits specified in ODCM 3.1.4. The current percent of ODCM limits are shown on the printout for each release period.

2.2.2.3 Gross Alpha Release

The gross alpha release is computed each month by counting the particulate filters, for each week for gross alpha activity in a proportional counter. The highest concentration calculated for any of these weeks is used for the monthly value. This value is input into the composite file of the computer and used for release calculations.

2.2.3 Total Error Estimation

The maximum errors associated with monitor readings, sample flow, vent flow, sample collection, monitor calibration and laboratory procedure are collectively estimated to be:

Fission and Activation Gases	Iodine	Particulates	Tritium
75%	60%	50%	45%

The average error associated with counting is estimated to be:

Fission and Activation Gases	Iodine	Particulates	Tritium
19%	28%	20%	8%

2.3 Gaseous Effluent Release Data

Regulatory Guide 1.21 Tables 1A, 1B and 1C are found in this report as Tables 2-1A, 2-1B, 2-1C, 2-2A, 2-2B, 2-2C, 2-3A, 2-3B, and 2-3C. Data are presented on a quarterly basis as required by Regulatory Guide 1.21.

To complete Tables 2-1A and 2-1B, the total release for each of the four categories (fission and activation gases, radioiodines, particulates and tritium) was divided by the number of seconds in the quarter to obtain a release rate in µCi/second for each category. However, the percent of the ODCM limits are not applicable because FNP has no curie limit for gaseous releases. Applicable limits are expressed in terms of dose. Noble gases are limited as specified in ODCM 3.1.2. The other three categories (tritium, radioiodines, and particulates) are limited as a group as specified in ODCM 3.1.2.

Dose rates due to noble gas releases and due to radioiodines, tritium and particulate releases were calculated as part of the pre-release and post-release permits. No limits were exceeded for this reporting period.

Gross alpha radioactivity is reported in Tables 2-1A, 2-1B and 2-1C as curies released in each quarter.

Limits for cumulative beta and gamma air doses due to noble gases are presented in Tables 2-4A and 2-4B along with the percent of ODCM limits.

Limits for cumulative doses to an individual due to radioiodines, tritium and particulates are specified in ODCM 3.1.4. Cumulative individual doses are presented in Tables 2-5A and 2-5B along with percent of ODCM limits.

2.4 Radiological Impact Due to Gaseous Releases

The air doses due to noble gases and doses to a Member of the Public due to radioiodines, tritium and particulates in gaseous effluents for Units 1 and 2 are provided in the following tables in order to show conformance with the limits of ODCM 3.1.3 and ODCM 3.1.4:

Unit 1 2015 Air Doses Due to Noble Gases in Gaseous Releases: Table 2-4A

Unit 2 2015 Air Doses Due to Noble Gases in Gaseous Releases: Table 2-4B

Unit 1 2015 Doses to a Member of the Public Due to Radioiodines, Tritium, and Particulates in Gaseous Releases: Table 2-5A

Unit 2 2015 Doses to a Member of the Public Due to Radioiodines, Tritium, and Particulates in Gaseous Releases: Table 2-5B

2.5 Gaseous Effluents - Batch Releases

Batch release information for Units 1 and 2 is summarized in the following tables:

Unit 1 2015 Gaseous Effluents - Batch Release Summary: Table 2-7A

Unit 2 2015 Gaseous Effluents - Batch Release Summary: Table 2-7B

2.6 Gaseous Effluents - Abnormal Releases

There were no abnormal releases on Unit 1 or Unit 2 during 2015.

Abnormal release information for Units 1 and 2 is summarized in the following tables:

Unit 1 2015 Gaseous Effluents - Abnormal Release Summary: Table 2-8A

Unit 2 2015 Gaseous Effluents - Abnormal Release Summary: Table 2-8B

Table 2-1A

Joseph M Farley Nuclear Plant
RADIOACTIVE EFFLUENT RELEASE REPORT - 2015
Gaseous Effluents - Summation Of All Releases
Unit: 1
Starting: 1-Jan-2015 Ending: 31-Dec-2015

Type of Effluent	Units	1ST Quarter	2ND Quarter	3RD Quarter	4TH Quarter
A. Fission And Activation Gases					
1. Total Release	Curies	8.72E-01	1.58E+00	5.81E-01	5.38E-01
2. Average Release rate for period	µCi/sec	1.11E-01	2.01E-01	7.37E-02	6.82E-02
3. Percent of Applicable Limit	%	*	*	*	*
B. Radioiodines					
1. Total Iodine-131	Curies	4.26E-07	2.07E-05	3.43E-09	0.00E+00
2. Average Release rate for period	µCi/sec	5.40E-08	2.63E-06	4.35E-10	0.00E+00
3. Percent of Applicable Limit	%	*	*	*	*
C. Particulates					
1. Particulates (Half-Lives > 8 Days)	Curies	7.18E-09	1.17E-06	0.00E+00	3.27E-08
2. Average Release rate for period	µCi/sec	9.10E-10	1.48E-07	0.00E+00	4.146E-09
3. Percent of Applicable Limit	%	*	*	*	*
D. Tritium					
1. Total Release	Curies	1.59E+00	3.91E+00	1.38E+00	1.39E+00
2. Average Release rate for period	µCi/sec	2.01E-01	4.96E-01	1.74E-01	1.77E-01
3. Percent of Applicable Limit	%	*	*	*	*
E. Gross Alpha					
1. Total Release	Curies	0.00E+00	0.00E+00	0.00E+00	0.00E+00
2. Average Release rate for period	µCi/sec	0.00E+00	0.00E+00	0.00E+00	0.00E+00

* Applicable limits are expressed in terms of dose. See Tables 2-4A, 2-4B, 2-5A, 2-5B of this report.

Table 2-1B

Joseph M Farley Nuclear Plant
RADIOACTIVE EFFLUENT RELEASE REPORT - 2015
Gaseous Effluents - Summation Of All Releases
Unit: 2
Starting: 1-Jan-2015 Ending: 31-Dec-2015

Type of Effluent	Units	1ST Quarter	2ND Quarter	3RD Quarter	4TH Quarter
A. Fission And Activation Gases					
1. Total Release	Curies	1.66E-01	4.77E-01	2.90E+00	3.02E+00
2. Average Release rate for period	µCi/sec	2.11E-02	6.05E-02	3.68E-01	3.83E-01
3. Percent of Applicable Limit	%	*	*	*	*
B. Radioiodines					
1. Total Iodine-131	Curies	0.00E+00	0.00E+00	0.00E+00	0.00E+00
2. Average Release rate for period	µCi/sec	0.00E+00	0.00E+00	0.00E+00	0.00E+00
3. Percent of Applicable Limit	%	*	*	*	*
C. Particulates					
1. Particulates (Half-Lives > 8 Days)	Curies	2.71E-05	3.63E-08	0.00E+00	7.70E-07
2. Average Release rate for period	µCi/sec	3.43E-06	4.61E-09	0.00E+00	9.770E-08
3. Percent of Applicable Limit	%	*	*	*	*
D. Tritium					
1. Total Release	Curies	8.10E+00	4.48E+00	4.56E+00	7.70E+00
2. Average Release rate for period	µCi/sec	1.03E+00	5.68E-01	5.79E-01	9.77E-01
3. Percent of Applicable Limit	%	*	*	*	*
E. Gross Alpha					
1. Total Release	Curies	0.00E+00	1.74E-06	0.00E+00	6.18E-08
2. Average Release rate for period	µCi/sec	0.00E+00	2.21E-07	0.00E+00	7.84E-09

* Applicable limits are expressed in terms of dose. See Tables 2-4A, 2-4B, 2-5A, 2-5B of this report.

Table 2-1C

Joseph M Farley Nuclear Plant
RADIOACTIVE EFFLUENT RELEASE REPORT - 2015
Gaseous Effluents - Summation Of All Releases
Unit: Site
Starting: 1-Jan-2015 Ending: 31-Dec-2015

Type of Effluent	Units	1ST Quarter	2ND Quarter	3RD Quarter	4TH Quarter
A. Fission And Activation Gases					
1. Total Release	Curies	1.04E+00	2.06E+00	3.48E+00	3.55E+00
2. Average Release rate for period	µCi/sec	1.32E-01	2.61E-01	4.42E-01	4.51E-01
3. Percent of Applicable Limit	%	*	*	*	*
B. Radioiodines					
1. Total Iodine-131	Curies	4.26E-07	2.07E-05	3.43E-09	0.00E+00
2. Average Release rate for period	µCi/sec	5.40E-08	2.63E-06	4.35E-10	0.00E+00
3. Percent of Applicable Limit	%	*	*	*	*
C. Particulates					
1. Particulates (Half-Lives > 8 Days)	Curies	2.71E-05	1.20E-06	0.00E+00	8.03E-07
2. Average Release rate for period	µCi/sec	3.44E-06	1.52E-07	0.00E+00	1.018E-07
3. Percent of Applicable Limit	%	*	*	*	*
D. Tritium					
1. Total Release	Curies	9.69E+00	8.39E+00	5.94E+00	9.09E+00
2. Average Release rate for period	µCi/sec	1.23E+00	1.06E+00	7.53E-01	1.15E+00
3. Percent of Applicable Limit	%	*	*	*	*
E. Gross Alpha					
1. Total Release	Curies	0.00E+00	1.74E-06	0.00E+00	6.18E-08
2. Average Release rate for period	µCi/sec	0.00E+00	2.21E-07	0.00E+00	7.84E-09

* Applicable limits are expressed in terms of dose. See Tables 2-4A, 2-4B, 2-5A, 2-5B of this report.

Table 2-2A

Joseph M Farley Nuclear Plant
RADIOACTIVE EFFLUENT RELEASE REPORT - 2015
Gaseous Effluents - Mixed Mode Level Releases
Unit: 1
Starting: 1-Jan- 2015 Ending: 31-Dec-2015

		Continuous Mode			
Nuclides Released	**Unit**	**1ST Quarter**	**2ND Quarter**	**3RD Quarter**	**4TH Quarter**
Fission Gases					
Ar-41	Curies	0.00E+00	5.59E-01	0.00E+00	0.00E+00
Kr-90	Curies	0.00E+00	0.00E+00	0.00E+00	0.00E+00
Total For Period	**Curies**	**0.00E+00**	**5.59E-01**	**0.00E+00**	**0.00E+00**
Iodines					
I-131	Curies	4.26E-07	1.84E-05	0.00E+00	0.00E+00
I-133	Curies	0.00E+00	2.03E-06	0.00E+00	0.00E+00
Total For Period	**Curies**	**4.26E-07**	**2.04E-05**	**0.00E+00**	**0.00E+00**
Particulates					
Cr-51	Curies	0.00E+00	3.32E-07	0.00E+00	0.00E+00
Co-58	Curies	0.00E+00	2.04E-07	0.00E+00	0.00E+00
Co-60	Curies	0.00E+00	3.87E-07	0.00E+00	0.00E+00
Sr-89	Curies	0.00E+00	8.32E-08	0.00E+00	0.00E+00
Sr-90	Curies	0.00E+00	0.00E+00	0.00E+00	3.27E-08
Nb-95	Curies	0.00E+00	1.12E-07	0.00E+00	0.00E+00
Sb-126	Curies	0.00E+00	9.02E-09	0.00E+00	0.00E+00
Total For Period	**Curies**	**0.00E+00**	**1.13E-06**	**0.00E+00**	**3.27E-08**
Tritium					
H-3	Curies	1.56E+00	3.84E+00	1.10E+00	8.38E-01

If Not Detected, Nuclide is Not Reported. Zeroes in this table indicates that no radioactivity was present at detectable levels.
See Table 2-6 for typical minimum detectable concentrations.

Table 2-2A

Joseph M Farley Nuclear Plant
RADIOACTIVE EFFLUENT RELEASE REPORT - 2015
Gaseous Effluents - Mixed Mode Level Releases
Unit: 1
Starting: 1-Jan- 2015 Ending: 31-Dec-2015

		Continuous Mode			
Nuclides Released	**Unit**	**1ST Quarter**	**2ND Quarter**	**3RD Quarter**	**4TH Quarter**
Gross Alpha					
No Nuclides Found	Curies	0.00E+00	0.00E+00	0.00E+00	0.00E+00

If Not Detected, Nuclide is Not Reported. Zeroes in this table indicates that no radioactivity was present at detectable levels.
See Table 2-6 for typical minimum detectable concentrations.

Table 2-2A

Joseph M Farley Nuclear Plant
RADIOACTIVE EFFLUENT RELEASE REPORT - 2015
Gaseous Effluents - Mixed Mode Level Releases
Unit: 1
Starting: 1-Jan- 2015 Ending: 31-Dec-2015

		Batch Mode			
Nuclides Released	**Unit**	**1ST Quarter**	**2ND Quarter**	**3RD Quarter**	**4TH Quarter**
Fission Gases					
Ar-41	Curies	6.33E-01	4.37E-01	5.64E-01	4.97E-01
Kr-85M	Curies	0.00E+00	3.21E-04	0.00E+00	0.00E+00
Kr-88	Curies	0.00E+00	1.02E-04	0.00E+00	0.00E+00
Xe-131M	Curies	2.23E-03	2.96E-03	0.00E+00	0.00E+00
Xe-133M	Curies	1.88E-03	1.21E-02	0.00E+00	0.00E+00
Xe-133	Curies	2.35E-01	5.33E-01	1.67E-02	4.03E-02
Xe-135	Curies	6.60E-04	3.66E-02	1.98E-04	0.00E+00
Xe-138	Curies	0.00E+00	5.45E-05	0.00E+00	0.00E+00
Total For Period	**Curies**	**8.72E-01**	**1.02E+00**	**5.81E-01**	**5.38E-01**
Iodines					
I-131	Curies	0.00E+00	2.08E-07	3.43E-09	0.00E+00
I-133	Curies	0.00E+00	9.81E-08	0.00E+00	0.00E+00
Total For Period	**Curies**	**0.00E+00**	**3.06E-07**	**3.43E-09**	**0.00E+00**
Particulates					
Co-58	Curies	0.00E+00	2.49E-08	0.00E+00	0.00E+00
Co-60	Curies	0.00E+00	3.47E-09	0.00E+00	0.00E+00
Y-88	Curies	7.18E-09	7.27E-09	0.00E+00	0.00E+00
Sn-117M	Curies	0.00E+00	2.44E-09	0.00E+00	0.00E+00
Total For Period	**Curies**	**7.18E-09**	**3.81E-08**	**0.00E+00**	**0.00E+00**
Tritium					
H-3	Curies	2.60E-02	7.39E-02	2.71E-01	5.56E-01

If Not Detected, Nuclide is Not Reported. Zeroes in this table indicates that no radioactivity was present at detectable levels.
See Table 2-6 for typical minimum detectable concentrations.

Table 2-2A

Joseph M Farley Nuclear Plant
RADIOACTIVE EFFLUENT RELEASE REPORT - 2015
Gaseous Effluents - Mixed Mode Level Releases
Unit: 1
Starting: 1-Jan- 2015 Ending: 31-Dec-2015

		Batch Mode			
Nuclides Released	**Unit**	**1ST Quarter**	**2ND Quarter**	**3RD Quarter**	**4TH Quarter**
Gross Alpha					
No Nuclides Found	Curies	0.00E+00	0.00E+00	0.00E+00	0.00E+00

If Not Detected, Nuclide is Not Reported. Zeroes in this table indicates that no radioactivity was present at detectable levels.
See Table 2-6 for typical minimum detectable concentrations.

Table 2-2B

Joseph M Farley Nuclear Plant
RADIOACTIVE EFFLUENT RELEASE REPORT - 2015
Gaseous Effluents - Mixed Mode Level Releases
Unit: 2
Starting: 1-Jan- 2015 Ending: 31-Dec-2015

		Continuous Mode			
Nuclides Released	**Unit**	**1ST Quarter**	**2ND Quarter**	**3RD Quarter**	**4TH Quarter**
Fission Gases					
Ar-41	Curies	0.00E+00	0.00E+00	2.42E+00	2.70E+00
Total For Period	**Curies**	**0.00E+00**	**0.00E+00**	**2.42E+00**	**2.70E+00**
Iodines					
No Nuclides Found	Curies	0.00E+00	0.00E+00	0.00E+00	0.00E+00
Particulates					
Sr-90	Curies	0.00E+00	3.56E-08	0.00E+00	0.00E+00
Ta-182	Curies	0.00E+00	0.00E+00	0.00E+00	7.70E-07
Total For Period	**Curies**	**0.00E+00**	**3.56E-08**	**0.00E+00**	**7.70E-07**
Tritium					
H-3	Curies	8.10E+00	4.47E+00	4.56E+00	7.69E+00
Gross Alpha					
G-Alpha	Curies	0.00E+00	1.74E-06	0.00E+00	6.18E-08
Total For Period	**Curies**	**0.00E+00**	**1.74E-06**	**0.00E+00**	**6.18E-08**

If Not Detected, Nuclide is Not Reported. Zeroes in this table indicates that no radioactivity was present at detectable levels.
See Table 2-6 for typical minimum detectable concentrations.

Table 2-2B

Joseph M Farley Nuclear Plant
RADIOACTIVE EFFLUENT RELEASE REPORT - 2015
Gaseous Effluents - Mixed Mode Level Releases
Unit: 2
Starting: 1-Jan- 2015 Ending: 31-Dec-2015

		Batch Mode			
Nuclides Released	**Unit**	**1ST Quarter**	**2ND Quarter**	**3RD Quarter**	**4TH Quarter**
Fission Gases					
Ar-41	Curies	1.59E-01	4.77E-01	4.81E-01	3.15E-01
Kr-85M	Curies	0.00E+00	0.00E+00	0.00E+00	1.52E-04
Kr-88	Curies	0.00E+00	0.00E+00	0.00E+00	1.98E-04
Xe-133M	Curies	0.00E+00	0.00E+00	0.00E+00	9.04E-06
Xe-133	Curies	7.41E-03	1.12E-04	5.40E-03	3.15E-03
Xe-135	Curies	0.00E+00	1.10E-06	2.11E-05	1.58E-03
Total For Period	**Curies**	**1.66E-01**	**4.77E-01**	**4.86E-01**	**3.20E-01**
Iodines					
No Nuclides Found	Curies	0.00E+00	0.00E+00	0.00E+00	0.00E+00
Particulates					
Ag-108M	Curies	2.71E-05	0.00E+00	0.00E+00	0.00E+00
Total For Period	**Curies**	**2.71E-05**	**0.00E+00**	**0.00E+00**	**0.00E+00**
Tritium					
H-3	Curies	6.48E-04	1.56E-03	2.33E-03	6.64E-03
Gross Alpha					
No Nuclides Found	Curies	0.00E+00	0.00E+00	0.00E+00	0.00E+00

If Not Detected, Nuclide is Not Reported. Zeroes in this table indicates that no radioactivity was present at detectable levels.
See Table 2-6 for typical minimum detectable concentrations.

Table 2-2C

Joseph M Farley Nuclear Plant
RADIOACTIVE EFFLUENT RELEASE REPORT - 2015
Gaseous Effluents - Mixed Mode Level Releases
Unit: Site
Starting: 1-Jan- 2015 Ending: 31-Dec-2015

		Continuous Mode			
Nuclides Released	**Unit**	**1ST Quarter**	**2ND Quarter**	**3RD Quarter**	**4TH Quarter**
Fission Gases					
Ar-41	Curies	0.00E+00	5.59E-01	2.42E+00	2.70E+00
Kr-90	Curies	0.00E+00	0.00E+00	0.00E+00	0.00E+00
Total For Period	**Curies**	**0.00E+00**	**5.59E-01**	**2.42E+00**	**2.70E+00**
Iodines					
I-131	Curies	4.26E-07	1.84E-05	0.00E+00	0.00E+00
I-133	Curies	0.00E+00	2.03E-06	0.00E+00	0.00E+00
Total For Period	**Curies**	**4.26E-07**	**2.04E-05**	**0.00E+00**	**0.00E+00**
Particulates					
Cr-51	Curies	0.00E+00	3.32E-07	0.00E+00	0.00E+00
Co-58	Curies	0.00E+00	2.04E-07	0.00E+00	0.00E+00
Co-60	Curies	0.00E+00	3.87E-07	0.00E+00	0.00E+00
Sr-89	Curies	0.00E+00	8.32E-08	0.00E+00	0.00E+00
Sr-90	Curies	0.00E+00	3.56E-08	0.00E+00	3.27E-08
Nb-95	Curies	0.00E+00	1.12E-07	0.00E+00	0.00E+00
Ta-182	Curies	0.00E+00	0.00E+00	0.00E+00	7.70E-07
Sb-126	Curies	0.00E+00	9.02E-09	0.00E+00	0.00E+00
Total For Period	**Curies**	**0.00E+00**	**1.16E-06**	**0.00E+00**	**8.03E-07**
Tritium					
H-3	Curies	9.67E+00	8.31E+00	5.67E+00	8.53E+00

If Not Detected, Nuclide is Not Reported. Zeroes in this table indicates that no radioactivity was present at detectable levels.
See Table 2-6 for typical minimum detectable concentrations.

Table 2-2C

Joseph M Farley Nuclear Plant
RADIOACTIVE EFFLUENT RELEASE REPORT - 2015
Gaseous Effluents - Mixed Mode Level Releases
Unit: Site
Starting: 1-Jan- 2015 Ending: 31-Dec-2015

		Continuous Mode			
Nuclides Released	**Unit**	**1ST Quarter**	**2ND Quarter**	**3RD Quarter**	**4TH Quarter**
Gross Alpha					
G-Alpha	Curies	0.00E+00	1.74E-06	0.00E+00	6.18E-08
Total For Period	**Curies**	**0.00E+00**	**1.74E-06**	**0.00E+00**	**6.18E-08**

If Not Detected, Nuclide is Not Reported. Zeroes in this table indicates that no radioactivity was present at detectable levels.
See Table 2-6 for typical minimum detectable concentrations.

Table 2-2C

Joseph M Farley Nuclear Plant
RADIOACTIVE EFFLUENT RELEASE REPORT - 2015
Gaseous Effluents - Mixed Mode Level Releases
Unit: Site
Starting: 1-Jan- 2015 Ending: 31-Dec-2015

		Batch Mode			
Nuclides Released	**Unit**	**1ST Quarter**	**2ND Quarter**	**3RD Quarter**	**4TH Quarter**
Fission Gases					
Ar-41	Curies	7.92E-01	9.13E-01	1.05E+00	8.12E-01
Kr-85M	Curies	0.00E+00	3.21E-04	0.00E+00	1.52E-04
Kr-88	Curies	0.00E+00	1.02E-04	0.00E+00	1.98E-04
Xe-131M	Curies	2.23E-03	2.96E-03	0.00E+00	0.00E+00
Xe-133M	Curies	1.88E-03	1.21E-02	0.00E+00	9.04E-06
Xe-133	Curies	2.42E-01	5.33E-01	2.21E-02	4.34E-02
Xe-135	Curies	6.60E-04	3.66E-02	2.19E-04	1.58E-03
Xe-138	Curies	0.00E+00	5.45E-05	0.00E+00	0.00E+00
Total For Period	**Curies**	**1.04E+00**	**1.50E+00**	**1.07E+00**	**8.58E-01**
Iodines					
I-131	Curies	0.00E+00	2.08E-07	3.43E-09	0.00E+00
I-133	Curies	0.00E+00	9.81E-08	0.00E+00	0.00E+00
Total For Period	**Curies**	**0.00E+00**	**3.06E-07**	**3.43E-09**	**0.00E+00**
Particulates					
Co-58	Curies	0.00E+00	2.49E-08	0.00E+00	0.00E+00
Co-60	Curies	0.00E+00	3.47E-09	0.00E+00	0.00E+00
Y-88	Curies	7.18E-09	7.27E-09	0.00E+00	0.00E+00
Ag-108M	Curies	2.71E-05	0.00E+00	0.00E+00	0.00E+00
Sn-117M	Curies	0.00E+00	2.44E-09	0.00E+00	0.00E+00
Total For Period	**Curies**	**2.71E-05**	**3.81E-08**	**0.00E+00**	**0.00E+00**

If Not Detected, Nuclide is Not Reported. Zeroes in this table indicates that no radioactivity was present at detectable levels.
See Table 2-6 for typical minimum detectable concentrations.

Table 2-2C

Joseph M Farley Nuclear Plant
RADIOACTIVE EFFLUENT RELEASE REPORT - 2015
Gaseous Effluents - Mixed Mode Level Releases
Unit: Site
Starting: 1-Jan- 2015 Ending: 31-Dec-2015

		Batch Mode			
Nuclides Released	**Unit**	**1ST Quarter**	**2ND Quarter**	**3RD Quarter**	**4TH Quarter**
Tritium					
H-3	Curies	2.66E-02	7.54E-02	2.73E-01	5.63E-01
Gross Alpha					
No Nuclides Found	Curies	0.00E+00	0.00E+00	0.00E+00	0.00E+00

If Not Detected, Nuclide is Not Reported. Zeroes in this table indicates that no radioactivity was present at detectable levels.
See Table 2-6 for typical minimum detectable concentrations.

Table 2-3A

Joseph M Farley Nuclear Plant
RADIOACTIVE EFFLUENT RELEASE REPORT - 2015
Gaseous Effluents - Ground Level Releases
Unit: 1
Starting: 1-Jan-2015 Ending: 31-Dec-2015

		Continuous Mode			
Nuclides Released	**Unit**	**1ST Quarter**	**2ND Quarter**	**3RD Quarter**	**4TH Quarter**
Fission Gases					
Ar-41	Curies	0.00E+00	0.00E+00	0.00E+00	0.00E+00
Kr-90	Curies	0.00E+00	0.00E+00	0.00E+00	0.00E+00
Total For Period	**Curies**	**0.00E+00**	**0.00E+00**	**0.00E+00**	**0.00E+00**
Iodines					
No Nuclides Found	Curies	0.00E+00	0.00E+00	0.00E+00	0.00E+00
Particulates					
No Nuclides Found	Curies	0.00E+00	0.00E+00	0.00E+00	0.00E+00
Tritium					
No Nuclides Found	Curies	0.00E+00	0.00E+00	0.00E+00	0.00E+00
Gross Alpha					
No Nuclides Found	Curies	0.00E+00	0.00E+00	0.00E+00	0.00E+00

If Not Detected, Nuclide is Not Reported. Zeroes in this table indicates that no radioactivity was present at detectable levels. See Table 2-6 for typical minimum detectable concentrations.

Table 2-3A

Joseph M Farley Nuclear Plant
RADIOACTIVE EFFLUENT RELEASE REPORT - 2015
Gaseous Effluents - Ground Level Releases
Unit: 1
Starting: 1-Jan-2015 Ending: 31-Dec-2015

		Batch Mode			
Nuclides Released	**Unit**	**1ST Quarter**	**2ND Quarter**	**3RD Quarter**	**4TH Quarter**
Fission Gases					
No Nuclides Found	Curies	0.00E+00	0.00E+00	0.00E+00	0.00E+00
Iodines					
No Nuclides Found	Curies	0.00E+00	0.00E+00	0.00E+00	0.00E+00
Particulates					
No Nuclides Found	Curies	0.00E+00	0.00E+00	0.00E+00	0.00E+00
Tritium					
No Nuclides Found	Curies	0.00E+00	0.00E+00	0.00E+00	0.00E+00
Gross Alpha					
No Nuclides Found	Curies	0.00E+00	0.00E+00	0.00E+00	0.00E+00

If Not Detected, Nuclide is Not Reported. Zeroes in this table indicates that no radioactivity was present at detectable levels.
See Table 2-6 for typical minimum detectable concentrations.

Table 2-3B

Joseph M Farley Nuclear Plant
RADIOACTIVE EFFLUENT RELEASE REPORT - 2015
Gaseous Effluents - Ground Level Releases
Unit: 2
Starting: 1-Jan-2015 Ending: 31-Dec-2015

		Continuous Mode			
Nuclides Released	**Unit**	**1ST Quarter**	**2ND Quarter**	**3RD Quarter**	**4TH Quarter**
Fission Gases					
Ar-41	Curies	0.00E+00	0.00E+00	0.00E+00	0.00E+00
Kr-90	Curies	0.00E+00	0.00E+00	0.00E+00	0.00E+00
Total For Period	**Curies**	**0.00E+00**	**0.00E+00**	**0.00E+00**	**0.00E+00**
Iodines					
No Nuclides Found	Curies	0.00E+00	0.00E+00	0.00E+00	0.00E+00
Particulates					
No Nuclides Found	Curies	0.00E+00	0.00E+00	0.00E+00	0.00E+00
Total For Period	**Curies**	**0.00E+00**	**0.00E+00**	**0.00E+00**	**0.00E+00**
Tritium					
No Nuclides Found	Curies	0.00E+00	0.00E+00	0.00E+00	0.00E+00
Gross Alpha					
No Nuclides Found	Curies	0.00E+00	0.00E+00	0.00E+00	0.00E+00

If Not Detected, Nuclide is Not Reported. Zeroes in this table indicates that no radioactivity was present at detectable levels. See Table 2-6 for typical minimum detectable concentrations.

Table 2-3B

Joseph M Farley Nuclear Plant
RADIOACTIVE EFFLUENT RELEASE REPORT - 2015
Gaseous Effluents - Ground Level Releases
Unit: 2
Starting: 1-Jan-2015 Ending: 31-Dec-2015

		Batch Mode			
Nuclides Released	**Unit**	**1ST Quarter**	**2ND Quarter**	**3RD Quarter**	**4TH Quarter**
Fission Gases					
No Nuclides Found	Curies	0.00E+00	0.00E+00	0.00E+00	0.00E+00
Iodines					
No Nuclides Found	Curies	0.00E+00	0.00E+00	0.00E+00	0.00E+00
Particulates					
No Nuclides Found	Curies	0.00E+00	0.00E+00	0.00E+00	0.00E+00
Tritium					
No Nuclides Found	Curies	0.00E+00	0.00E+00	0.00E+00	0.00E+00
Gross Alpha					
No Nuclides Found	Curies	0.00E+00	0.00E+00	0.00E+00	0.00E+00

If Not Detected, Nuclide is Not Reported. Zeroes in this table indicates that no radioactivity was present at detectable levels.
See Table 2-6 for typical minimum detectable concentrations.

Table 2-3C

Joseph M Farley Nuclear Plant
RADIOACTIVE EFFLUENT RELEASE REPORT - 2015
Gaseous Effluents - Ground Level Releases
Unit: Site
Starting: 1-Jan-2015 Ending: 31-Dec-2015

		Continuous Mode			
Nuclides Released	**Unit**	**1ST Quarter**	**2ND Quarter**	**3RD Quarter**	**4TH Quarter**
Fission Gases					
Ar-41	Curies	0.00E+00	0.00E+00	0.00E+00	0.00E+00
Kr-90	Curies	0.00E+00	0.00E+00	0.00E+00	0.00E+00
Total For Period	**Curies**	**0.00E+00**	**0.00E+00**	**0.00E+00**	**0.00E+00**
Iodines					
No Nuclides Found	Curies	0.00E+00	0.00E+00	0.00E+00	0.00E+00
Particulates					
No Nuclides Found	Curies	0.00E+00	0.00E-00	0.00E+00	0.00E+00
Total For Period	**Curies**	**0.00E+00**	**0.00E-00**	**0.00E+00**	**0.00E+00**
Tritium					
No Nuclides Found	Curies	0.00E+00	0.00E+00	0.00E+00	0.00E+00
Gross Alpha					
No Nuclides Found	Curies	0.00E+00	0.00E+00	0.00E+00	0.00E+00

If Not Detected, Nuclide is Not Reported. Zeroes in this table indicates that no radioactivity was present at detectable levels. See Table 2-6 for typical minimum detectable concentrations.

Table 2-3C

Joseph M Farley Nuclear Plant
RADIOACTIVE EFFLUENT RELEASE REPORT - 2015
Gaseous Effluents - Ground Level Releases
Unit: Site
Starting: 1-Jan-2015 Ending: 31-Dec-2015

		Batch Mode			
Nuclides Released	**Unit**	**1ST Quarter**	**2ND Quarter**	**3RD Quarter**	**4TH Quarter**
Fission Gases					
No Nuclides Found	Curies	0.00E+00	0.00E+00	0.00E+00	0.00E+00
Iodines					
No Nuclides Found	Curies	0.00E+00	0.00E+00	0.00E+00	0.00E+00
Particulates					
No Nuclides Found	Curies	0.00E+00	0.00E+00	0.00E+00	0.00E+00
Tritium					
No Nuclides Found	Curies	0.00E+00	0.00E+00	0.00E+00	0.00E+00
Gross Alpha					
No Nuclides Found	Curies	0.00E+00	0.00E+00	0.00E+00	0.00E+00

If Not Detected, Nuclide is Not Reported. Zeroes in this table indicates that no radioactivity was present at detectable levels.
See Table 2-6 for typical minimum detectable concentrations.

Table 2-4A

Joseph M Farley Nuclear Plant
RADIOACTIVE EFFLUENT RELEASE REPORT - 2015
Air Doses Due to Gaseous Releases
Unit: 1
Starting: 1-Jan-2015 Ending: 31-Dec-2015

Cumulative Doses Per Quarter

Type of Radiation	ODCM Lmt	Units	1ST Qtr	% ODCM	2ND Qtr	% ODCM	3RD Qtr	% ODCM	4TH Qtr	% ODCM
Gamma Air	5.00E+00	mRad	2.04E-04	4.09E-03	3.26E-04	6.53E-03	1.80E-04	3.60E-03	1.59E-04	3.18E-03
Beta Air	1.00E+01	mRad	7.97E-05	7.97E-04	1.35E-04	1.35E-03	6.40E-05	6.40E-04	5.73E-05	5.73E-04

Cumulative Doses Per Year

Type of Radiation	ODCM Lmt	Units	Year to End Date	% ODCM	Receptor	Limit
Gamma Air	1.00E+01	mRad	8.69E-04	8.69E-03	Site Boundary SSE Mixed Mode R	Air Dose Gamma Annual
Beta Air	2.00E+01	mRad	3.36E-04	1.68E-03	Site Boundary SSE Mixed Mode R	Air Dose Beta Annual

Table 2-4B

Joseph M Farley Nuclear Plant
RADIOACTIVE EFFLUENT RELEASE REPORT - 2015
Air Doses Due to Gaseous Releases
Unit: 2
Starting: 1-Jan-2015 Ending: 31-Dec-2015

Cumulative Doses Per Quarter

Type of Radiation	ODCM Lmt	Units	1ST Qtr	% ODCM	2ND Qtr	% ODCM	3RD Qtr	% ODCM	4TH Qtr	% ODCM
Gamma Air	5.00E+00	mRad	5.07E-05	1.01E-03	1.52E-04	3.04E-03	9.23E-04	1.85E-02	9.60E-04	1.92E-02
Beta Air	1.00E+01	mRad	1.81E-05	1.81E-04	5.35E-05	5.35E-04	3.26E-04	3.26E-03	3.39E-04	3.39E-03

Cumulative Doses Per Year

Type of Radiation	ODCM Lmt	Units	Year to End Date	% ODCM	Receptor	Limit
Gamma Air	1.00E+01	mRad	2.09E-03	2.09E-02	Site Boundary SSE Mixed Mode R	Air Dose Gamma Annual
Beta Air	2.00E+01	mRad	7.36E-04	3.68E-03	Site Boundary SSE Mixed Mode R	Air Dose Beta Annual

Table 2-5A

Joseph M Farley Nuclear Plant
RADIOACTIVE EFFLUENT RELEASE REPORT - 2015
Doses To A Member Of The Public Due To Radioiodines, Tritium, and Particulates in Gaseous Releases
Unit: 1
Starting: 1-Jan-2015 Ending: 31-Dec-2015

Cumulative Doses Per Quarter

Organ	ODCM Lmt	Units	1ST Qtr	% ODCM	2ND Qtr	% ODCM	3RD Qtr	% ODCM	4TH Qtr	% ODCM
Liver	7.50E+00	mRem	2.16E-04	2.88E-03	4.73E-04	6.31E-03	1.88E-04	2.51E-03	1.91E-04	2.54E-03
Bone	7.50E+00	mRem	2.56E-08	3.41E-07	4.97E-06	6.62E-05	2.06E-10	2.75E-09	1.37E-05	1.83E-04
GI-Lli	7.50E+00	mRem	2.16E-04	2.88E-03	4.73E-04	6.30E-03	1.88E-04	2.51E-03	1.91E-04	2.55E-03
Thyroid	7.50E+00	mRem	2.24E-04	2.99E-03	8.09E-04	1.08E-02	1.88E-04	2.51E-03	1.91E-04	2.54E-03
Lung	7.50E+00	mRem	2.16E-04	2.88E-03	4.72E-04	6.30E-03	1.88E-04	2.51E-03	1.91E-04	2.54E-03
Kidney	7.50E+00	mRem	2.16E-04	2.88E-03	4.74E-04	6.32E-03	1.88E-04	2.51E-03	1.91E-04	2.54E-03
Total Body	7.50E+00	mRem	2.16E-04	2.88E-03	4.73E-04	6.30E-03	1.88E-04	2.51E-03	1.94E-04	2.59E-03

Cumulative Doses per Year

Organ	ODCM Lmt	Units	Year to Ending Date	% ODCM	Receptor	Limit
Liver	1.500E+01	mRem	1.068E-03	7.122E-03	Gas Controlling Receptor	Iodine/Part Dose Annual
Bone	1.500E+01	mRem	1.869E-05	1.246E-04	Gas Controlling Receptor	Iodine/Part Dose Annual
GI-Lli	1.500E+01	mRem	1.068E-03	7.120E-03	Gas Controlling Receptor	Iodine/Part Dose Annual
Thyroid	1.500E+01	mRem	1.412E-03	9.412E-03	Gas Controlling Receptor	Iodine/Part Dose Annual
Lung	1.500E+01	mRem	1.067E-03	7.116E-03	Gas Controlling Receptor	Iodine/Part Dose Annual
Kidney	1.500E+01	mRem	1.069E-03	7.126E-03	Gas Controlling Receptor	Iodine/Part Dose Annual
Total Body	1.500E+01	mRem	1.072E-03	7.144E-03	Gas Controlling Receptor	Iodine/Part Dose Annual

Table 2-5B

Joseph M Farley Nuclear Plant

RADIOACTIVE EFFLUENT RELEASE REPORT - 2015

Doses To A Member Of The Public Due To Radioiodines, Tritium, and Particulates in Gaseous Releases

Unit: 2

Starting: 1-Jan-2015 Ending: 31-Dec-2015

Cumulative Doses Per Quarter

Organ	ODCM Lmt	Units	1ST Qtr	% ODCM	2ND Qtr	% ODCM	3RD Qtr	% ODCM	4TH Qtr	% ODCM
Thyroid	7.50E+00	mRem	1.11E-03	1.48E-02	6.12E-04	8.16E-03	6.04E-04	8.05E-03	1.03E-03	1.37E-02
Total Body	7.50E+00	mRem	1.11E-03	1.48E-02	6.16E-04	8.21E-03	6.04E-04	8.05E-03	1.03E-03	1.37E-02
Bone	7.50E+00	mRem	0.00E+00	0.00E+00	1.49E-05	1.99E-04	0.00E+00	0.00E+00	0.00E+00	0.00E+00
Liver	7.50E+00	mRem	1.11E-03	1.48E-02	6.12E-04	8.16E-03	6.04E-04	8.05E-03	1.03E-03	1.37E-02
Kidney	7.50E+00	mRem	1.11E-03	1.48E-02	6.12E-04	8.16E-03	6.04E-04	8.05E-03	1.03E-03	1.37E-02
Lung	7.50E+00	mRem	1.11E-03	1.48E-02	6.12E-04	8.16E-03	6.04E-04	8.05E-03	1.03E-03	1.37E-02
GI-Lli	7.50E+00	mRem	1.11E-03	1.48E-02	6.12E-04	8.17E-03	6.04E-04	8.05E-03	1.03E-03	1.37E-02

Cumulative Doses per Year

Organ	ODCM Lmt	Units	Year to Ending Date	% ODCM	Receptor	Limit
Thyroid	1.500E+01	mRem	3.355E-03	2.237E-02	Gas Controlling Receptor	Iodine/Part Dose Annual
Total Body	1.500E+01	mRem	3.359E-03	2.239E-02	Gas Controlling Receptor	Iodine/Part Dose Annual
Bone	1.500E+01	mRem	1.492E-05	9.944E-05	Gas Controlling Receptor	Iodine/Part Dose Annual
Liver	1.500E+01	mRem	3.355E-03	2.237E-02	Gas Controlling Receptor	Iodine/Part Dose Annual
Kidney	1.500E+01	mRem	3.355E-03	2.237E-02	Gas Controlling Receptor	Iodine/Part Dose Annual
Lung	1.500E+01	mRem	3.355E-03	2.237E-02	Gas Controlling Receptor	Iodine/Part Dose Annual
GI-Lli	1.500E+01	mRem	3.355E-03	2.237E-02	Gas Controlling Receptor	Iodine/Part Dose Annual

TABLE 2-6
Joseph M. Farley Nuclear Plant
ANNUAL RADIOACTIVE EFFLUENT RELEASE REPORT - 2015
MINIMUM DETECTABLE CONCENTRATIONS - GASEOUS EFFLUENT ANALYSES

The values in this table represent a priori Minimum Detectable Concentrations (MDC) that are typically achieved in laboratory analyses of gaseous radwaste samples.

Nuclide	MDC(µCi/ML)	Nuclide	MDC(µCi/ML)
MN-54	1.11E-14	KR-87	5.45E-08
CO-58	1.29E-14	KR-88	5.71E-08
FE-59	2.84E-14	XE-133	3.56E-08
CO-60	1.50E-14	XE-133M	1.96E-07
ZN-65	3.09E-14	XE-135	1.44E-08
MO-99	1.51E-13	XE-138	1.06E-07
CS-134	9.71E-15	I-131	1.15E-14
CS-137	9.99E-15	I-133	5.83E-08
CE-141	9.03E-15		
CE-144	2.37E-14		

Table 2-7A

Joseph M Farley Nuclear Plant
RADIOACTIVE EFFLUENT RELEASE REPORT - 2015
Gaseous Effluents - Batch Release Summary
Unit: 1
Starting: 1-Jan-2015 Ending: 31-Dec-2015

Gaseous Releases	Units	1ST Quarter	2ND Quarter	3RD Quarter	4TH Quarter	Year Totals
1. Number of batch releases		122	67	138	120	447
2. Total time period for batch releases	(Minutes)	9.97E+03	1.45E+04	1.43E+04	6.50E+03	4.53E+04
3. Maximum time period for a batch release	(Minutes)	7.88E+02	2.29E+03	1.24E+03	6.32E+02	2.29E+03
4. Average time period for a batch release	(Minutes)	8.17E+01	2.16E+02	1.04E+02	5.42E+01	1.01E+02
5. Minimum time period for a batch release	(Minutes)	2.00E+00	2.00E+00	3.00E+00	3.00E+00	2.00E+00

Table 2-7B

Joseph M Farley Nuclear Plant
RADIOACTIVE EFFLUENT RELEASE REPORT - 2015
Gaseous Effluents - Batch Release Summary
Unit: 2
Starting: 1-Jan-2015 Ending: 31-Dec-2015

Gaseous Releases	Units	1ST Quarter	2ND Quarter	3RD Quarter	4TH Quarter	Year Totals
1. Number of batch releases		52	56	51	49	208
2. Total time period for batch releases	(Minutes)	6.09E+03	5.67E+03	6.22E+03	2.95E+03	2.09E+04
3. Maximum time period for a batch release	(Minutes)	4.45E+02	2.75E+03	1.74E+03	3.42E+02	2.75E+03
4. Average time period for a batch release	(Minutes)	1.17E+02	1.01E+02	1.22E+02	6.01E+01	1.01E+02
5. Minimum time period for a batch release	(Minutes)	1.00E+00	2.00E+00	3.00E+00	5.00E+00	1.00E+00

Table 2-8A
Joseph M Farley Nuclear Plant
RADIOACTIVE EFFLUENT RELEASE REPORT - 2015
Gaseous Effluents - Abnormal Release Summary
Unit: 1
Starting: 1-Jan- 2015 Ending: 31-Dec-2015

Gaseous Releases	Units	1ST Quarter	2ND Quarter	3RD Quarter	4TH Quarter	Year Totals
1. Number of Releases		0	0	0	0	0
2. Total Time For All Releases	(Minutes)	0.00E+00	0.00E+00	0.00E+00	0.00E+00	0.00E+00
3. Maximum Time For A Release	(Minutes)	0.00E+00	0.00E+00	0.00E+00	0.00E+00	0.00E+00
4. Average Time For A Release	(Minutes)	0.00E+00	0.00E+00	0.00E+00	0.00E+00	0.00E+00
5. Minimum Time For A Release	(Minutes)	0.00E+00	0.00E+00	0.00E+00	0.00E+00	0.00E+00
6. Total activity for all releases	(Curies)	0.00E+00	0.00E+00	0.00E+00	0.00E+00	0.00E+00

Table 2-8B

Joseph M Farley Nuclear Plant
RADIOACTIVE EFFLUENT RELEASE REPORT - 2015
Gaseous Effluents - Abnormal Release Summary
Unit: 2
Starting: 1-Jan-2015 Ending: 31-Dec-2015

Gaseous Releases	Units	1ST Quarter	2ND Quarter	3RD Quarter	4TH Quarter	Year Totals
1. Number of Releases	:	0	0	0	0	0
2. Total Time For All Releases	(Minutes):	0.00E+00	0.00E+00	0.00E+00	0.00E+00	0.00E+00
3. Maximum Time For A Release	(Minutes):	0.00E+00	0.00E+00	0.00E+00	0.00E+00	0.00E+00
4. Average Time For A Release	(Minutes):	0.00E+00	0.00E+00	0.00E+00	0.00E+00	0.00E+00
5. Minimum Time For A Release	(Minutes):	0.00E+00	0.00E+00	0.00E+00	0.00E+00	0.00E+00
6. Total activity for all releases	(Curies) :	0.00E+00	0.00E+00	0.00E+00	0.00E+00	0.00E+00

3.0 SOLID WASTE

3.1 Regulatory Requirements

3.1.1 Solid Radioactive Waste System

FNP-0-M-30, PROCESS CONTROL PROGRAM; step B.3.1 states that the radwaste solidification system shall be OPERABLE and used, as applicable in accordance with a PROCESS CONTROL PROGRAM, for the SOLIDIFICATION and packaging of radioactive wastes to ensure meeting the requirements of 10 CFR Part 20 and 10 CFR Part 71 prior to shipment of radioactive wastes from the site.

3.1.2 Reporting Requirements

FNP-0-M-30, PROCESS CONTROL PROGRAM, step B.5.1 states that the Annual Radioactive Effluent Release Report, submitted in accordance with Technical Specifications 5.6.2 and 5.6.3, shall include a summary of the quantities of solid radwaste released from the units as outlined in Regulatory Guide 1.21, "Measuring, Evaluating, and Reporting Radioactive Material in Liquid and Gaseous Effluents and Solid Waste," Revision 2, issued June 2009 , with data summarized on an annual basis following the format of Table A-3 thereof.

3.2 Solid Waste Data

Regulatory Guide 1.21 Revision 2 Table A-3 is found in the report as Table 3-1.

TABLE 3-1
Joseph M. Farley Nuclear Plant
ANNUAL RADIOACTIVE EFFLUENT RELEASE REPORT – 2015
SOLID RADIOACTIVE WASTE SHIPPED FOR PROCESSING OR DISPOSAL
Starting 01-Jan-2015 Ending 31-Dec-2015

Resins, Filters, and Evaporator Bottoms	**Volume**		**Curies Shipped**
Waste Class	ft^3	m^3	
A	4.81E+02	1.36E+01	4.74E+00
B	1.20E+02	3.41E+00	1.18E+02
C	0.00E+00	0.00E+00	0.00E+00
ALL	6.02E+02	1.70E+01	1.23E+02

Major Nuclides for the Above Table:

Waste Class A	H-3 2.610%	C-14 15.280%	Fe-55 3.754%	Co-58 4.008%
	Co-60 26.258%	Ni-63 27.666%	Sb-125 17.921%	Cs-137 1.127%
Waste Class B	Fe-55 8.926%	Co-60 42.004%	Ni-63 44.689%	Sb-125 1.538%
Waste Class C	N/A			
ALL	C-14 1.034%	Fe-55 8.726%	Co-60 41.395%	Ni-63 44.032%
	Sb-125 2.171%			

Dry Active Waste	**Volume**		**Curies Shipped**
Waste Class	ft^3	m^3	
A	2.20E+04	6.22E+02	1.37E+01
B	0.00E+00	0.00E+00	0.00E+00
C	0.00E+00	0.00E+00	0.00E+00
ALL	2.20E+04	6.22E+02	1.37E+01

Major Nuclides for the Above Table:

Waste Class A	C-14 14.027%	Cr-51 4.619%	Fe-55 20.939%	Co-58 18.864%
	Co-60 23.438%	Ni-63 6.869%	Zr-95 2.594%	Nb-95 1.594%
	Sb-125 2.676%			
Waste Class B	N/A			
Waste Class C	N/A			
ALL	C-14 14.027%	Cr-51 4.619%	Fe-55 20.939%	Co-58 18.864%
	Co-60 23.438%	Ni-63 6.869%	Zr-95 2.594%	Nb-95 1.594%
	Sb-125 2.676%			

Irradiated Components	**Volume**		**Curies Shipped**
Waste Class	ft^3	m^3	
A	0.00E+00	0.00E+00	0.00E+00
B	0.00E+00	0.00E+00	0.00E+00
C	0.00E+00	0.00E+00	0.00E+00
ALL	0.00E+00	0.00E+00	0.00E+00

Major Nuclides for the Above Table:

Waste Class A	N/A
Waste Class B	N/A
Waste Class C	N/A
ALL	N/A

TABLE 3-1
Joseph M. Farley Nuclear Plant
ANNUAL RADIOACTIVE EFFLUENT RELEASE REPORT – 2015
SOLID RADIOACTIVE WASTE SHIPPED FOR PROCESSING OR DISPOSAL
Starting 01-Jan-2015 Ending 31-Dec-2015
(Continued)

Other Waste	**Volume**		**Curies Shipped**
Waste Class	ft^3	m^3	
A	1.04E+03	2.95E+01	3.30E+03
B	0.00E+00	0.00E+00	0.00E+00
C	0.00E+00	0.00E+00	0.00E+00
ALL	1.04E+03	2.95E+01	3.30E+03

Major Nuclides for the Above Table:

Waste Class A	H-3 21.649%	Cr-51 1.325%	Mn-54 1.212%	Fe-55 15.660%
	Co-58 8.212%	Co-60 17.201%	Ni-63 8.950%	Zn-65 1.188%
	Zr-95 10.793%	Nb-95 7.257%	Sb-125 4.139%	
Waste Class B	N/A			
Waste Class C	N/A			
ALL	H-3 21.649%	Cr-51 1.325%	Mn-54 1.212%	Fe-55 15.660%
	Co-58 8.212%	Co-60 17.201%	Ni-63 8.950%	Zn-65 1.188%
	Zr-95 10.793%	Nb-95 7.257%	Sb-125 4.139%	

Sum of All Low-Level Waste Shipped from Site	**Volume**		**Curies Shipped**
Waste Class	ft^3	m^3	
A	2.35E+04	6.65E+02	1.84E+01
B	1.20E+02	3.41E+00	1.18E+02
C	0.00E+00	0.00E+00	0.00E+00
ALL	2.36E+04	6.68E+02	1.36E+02

Major Nuclides for the Above Table:

Waste Class A	C-14 14.347%	Cr-51 3.427%	Fe-55 16.507%	Co-58 15.032%
	Co-60 24.164%	Ni-63 12.231%	Zr-95 1.939%	Nb-95 1.186%
	Sb-125 6.607%			
Waste Class B	Fe-55 8.926%	Co-60 42.004%	Ni-63 44.689%	Sb-125 1.538%
Waste Class C	N/A			
ALL	C-14 2.335%	Fe-55 9.949%	Co-58 2.287%	Co-60 39.597%
	Ni-63 40.311%	Sb-125 2.222%.		

4.0 DOSES TO MEMBERS OF THE PUBLIC INSIDE THE SITE BOUNDARY

4.1 Regulatory Requirements

Current FNP effluent controls as established by ODCM 6.1 do not require assessment of the radiation doses from radioactive liquid and gaseous effluents to MEMBERS OF THE PUBLIC due to their activities inside the SITE BOUNDARY (ODCM Figure 10-1).

4.2 Demonstration of Compliance

However, this assessment has been performed for 2015 using the methods described in ODCM 6.2 and is included in this section as Table 4-1.

Table 4-1

Joseph M Farley Nuclear Plant

RADIOACTIVE EFFLUENT RELEASE REPORT - 2015

Doses to a Member of the Public Due to Activities Inside the Site Boundary

Unit: Site

Starting: 1-Jan-2015 Ending: 31-Dec-2015

Location Name: Visitor Center
Distance (kilometers): 3.06E-01
Sector: N
Occupancy Factor: 1.37E-03
Age Group: Child

Ground Level Release	Particulate and Radioiodine	X/Q (sec/m3): 1.04E-04	D/Q (m-2): 4.80E-07
Ground Level Release	Noble Gas	X/Q (sec/m3): 1.04E-04	
Mixed Mode Release	Noble Gas	X/Q (sec/m3): 8.80E-06	
Mixed Mode Release	Particulate and Radioiodine	X/Q (sec/m3): 8.80E-06	D/Q (m-2): 6.20E-08

	Units	1ST Quarter	2ND Quarter	3RD Quarter	4TH Quarter	Year
Bone	mRem	2.76E-13	2.55E-10	2.22E-15	1.26E-11	2.68E-10
GI-Lli	mRem	4.15E-08	3.41E-08	2.48E-08	3.83E-08	1.39E-07
Skin	mRem	2.40E-13	2.80E-10	1.93E-15	0.00E+00	2.81E-10
Kidney	mRem	4.15E-08	3.41E-08	2.48E-08	3.83E-08	1.39E-07
Lung	mRem	4.15E-08	3.42E-08	2.48E-08	3.83E-08	1.39E-07
Total Body	mRem	4.15E-08	3.41E-08	2.48E-08	3.83E-08	1.39E-07
Thyroid	mRem	4.16E-08	3.53E-08	2.48E-08	3.83E-08	1.40E-07
Liver	mRem	4.15E-08	3.41E-08	2.48E-08	3.83E-08	1.39E-07

Table 4-1

Joseph M Farley Nuclear Plant
RADIOACTIVE EFFLUENT RELEASE REPORT - 2015
Doses to a Member of the Public Due to Activities Inside the Site Boundary
Unit: Site
Starting: 1-Jan-2015 Ending: 31-Dec-2015

Location Name: Service Water Pond
Distance (kilometers): 9.66E-01
Sector: N
Occupancy Factor: 7.57E-03
Age Group: Child

Ground Level Release	Particulate and Radioiodine	X/Q (sec/m3): 4.74E-05	D/Q (m-2): 1.31E-07
Mixed Mode Release	Particulate and Radioiodine	X/Q (sec/m3): 9.75E-07	D/Q (m-2): 2.78E-08
Mixed Mode Release	Noble Gas	X/Q (sec/m3): 9.75E-07	
Ground Level Release	Noble Gas	X/Q (sec/m3): 4.74E-05	

	Units	1ST Quarter	2ND Quarter	3RD Quarter	4TH Quarter	Year
Liver	mRem	2.54E-08	2.13E-08	1.52E-08	2.34E-08	8.54E-08
Thyroid	mRem	2.54E-08	2.21E-08	1.52E-08	2.34E-08	8.61E-08
Lung	mRem	2.54E-08	2.14E-08	1.52E-08	2.34E-08	8.54E-08
GI-Lli	mRem	2.54E-08	2.13E-08	1.52E-08	2.34E-08	8.54E-08
Skin	mRem	5.94E-13	6.95E-10	4.78E-15	0.00E+00	6.95E-10
Total Body	mRem	2.54E-08	2.13E-08	1.52E-08	2.34E-08	8.54E-08
Kidney	mRem	2.54E-08	2.13E-08	1.52E-08	2.34E-08	8.54E-08
Bone	mRem	5.37E-13	6.00E-10	4.32E-15	7.74E-12	6.09E-10

Table 4-1

Joseph M Farley Nuclear Plant

RADIOACTIVE EFFLUENT RELEASE REPORT - 2015

Doses to a Member of the Public Due to Activities Inside the Site Boundary

Unit: Site

Starting: 1-Jan-2015 Ending: 31-Dec-2015

Location Name: River Water Discharge - Air
Distance (kilometers): 1.64E+00
Sector: N
Occupancy Factor: 1.14E-02
Age Group: Child

Mixed Mode Release	Noble Gas	X/Q (sec/m3): 7.05E-07	
Ground Level Release	Noble Gas	X/Q (sec/m3): 1.63E-05	
Mixed Mode Release	Particulate and Radioiodine	X/Q (sec/m3): 7.05E-07	D/Q (m-2): 1.39E-08
Ground Level Release	Particulate and Radioiodine	X/Q (sec/m3): 1.63E-05	D/Q (m-2): 4.55E-08

	Units	1ST Quarter	2ND Quarter	3RD Quarter	4TH Quarter	Year
Total Body	mRem	2.77E-08	2.30E-08	1.65E-08	2.55E-08	9.28E-08
Thyroid	mRem	2.77E-08	2.38E-08	1.65E-08	2.55E-08	9.36E-08
Skin	mRem	4.47E-13	5.23E-10	3.60E-15	0.00E+00	5.23E-10
GI-Lli	mRem	2.77E-08	2.30E-08	1.65E-08	2.55E-08	9.28E-08
Bone	mRem	4.20E-13	4.56E-10	3.38E-15	8.43E-12	4.64E-10
Liver	mRem	2.77E-08	2.30E-08	1.65E-08	2.55E-08	9.28E-08
Lung	mRem	2.77E-08	2.31E-08	1.65E-08	2.55E-08	9.28E-08
Kidney	mRem	2.77E-08	2.30E-08	1.65E-08	2.55E-08	9.28E-08

5.0 TOTAL DOSE FROM URANIUM FUEL CYCLE (40CFR190)

5.1 Regulatory Requirements

Technical Specification 5.5.4.j states that the dose or dose commitment to any MEMBER OF THE PUBLIC over a calendar year, due to releases of radioactivity and to radiation from uranium fuel cycle sources, shall be limited to less than or equal to 25 mrem to the total body or to any organ, except the thyroid, which shall be limited to less than or equal to 75 mrem (as stated in ODCM 5.1).

With the calculated doses from the release of radioactive materials in liquid or gaseous effluents exceeding twice the limits of ODCM 2.1.3, 3.1.3, or 3.1.4, calculations shall be made according to ODCM 5.2 methods to determine whether the above (ODCM 5.1) limits have been exceeded (as stated in ODCM 5.1.2).

5.2 Demonstration of Compliance

Since none of the ODCM 2.1.3, 3.1.3, or 3.1.4 limits were exceeded during 2015, no calculations were required.

6.0 METEOROLOGICAL DATA

Meteorological data are retained onsite; these data are available to the NRC upon request. The meteorological data include annual summaries of hourly measurements of wind speed, wind direction and atmospheric stability in the form of joint frequency distribution tables.

7.0 PROGRAM DEVIATIONS

7.1 Inoperable Liquid or Gaseous Effluent Monitoring Instrumentation

7.1.1 Regulatory Requirements

ODCM 7.2.2.6 states in part that the Annual Radioactive Effluent Release Report (the report) shall include deviations from the liquid and gaseous effluent monitoring instrumentation operability requirements included in Sections 2.1.1 and 3.1.1 of the ODCM. The report must also include an explanation as to why the inoperability was not corrected in a timely manner.

7.1.2 Description of Deviations

There was one deviation during 2015. The Unit 1 liquid effluent radiation monitor, RE-18, was inoperable for greater than thirty days due to an isolation valve which would not fully close, as documented in Condition Report 714825. The isolation valve was repaired on 04/25/15 and Unit 1 RE-18 has been fully operational.

7.2 Effluent Sample Analysis Exceeding Minimum Detectable Concentration (MDC)

7.2.1 Regulatory Requirements

ODCM 7.2.2.6 states in part that the report shall include deviations from the MDC requirements included in ODCM Tables 2-3 and 3-3.

7.2.2 Description of Deviations

There were no deviations during 2015.

7.3 Incorrect Compositing of Liquid or Gaseous Effluent Samples

7.3.1 Regulatory Requirements

ODCM 7.2.2.6 states in part that the report shall include deviations from composite sampling requirements included in ODCM Tables 2-3 and 3-3.

7.3.2 Description of Deviations

During 2015 one Plant Vent Stack particulate filter collected the week of 07/16/15 to 07/22/15 was discarded prior to being analyzed as part of the July 2015 Gaseous Plant Vent Stack composite. No abnormal Plant Vent Stack abnormal radiation monitor trends, effluent alarms or unexpected gaseous releases occurred during this time period. This information is contained in CR 10115575.

8.0 CHANGES TO THE PLANT FARLEY ODCM

8.1 Regulatory Requirements

Pursuant to Technical Specification 5.5.1.c and ODCM 7.2.2.5, licensee initiated changes to the ODCM shall be submitted to the Nuclear Regulatory Commission as a part of or concurrent with the Annual Radioactive Effluent Release Report for the period in which any changes were made. Included are changes to the radiological environmental monitoring program sampling locations or dose calculation locations or pathways, including any changes made pursuant to ODCM 4.1.2.2.2 (land use census).

8.2 Description of Changes

There were no changes to the ODCM during 2015.

9.0 MAJOR CHANGES TO LIQUID, GASEOUS, OR SOLID RADWASTE TREATMENT SYSTEMS

9.1 Regulatory Requirements

ODCM 7.2.2.7 states in part that, as required by ODCM 2.1.5 and 3.1.6, licensee initiated MAJOR CHANGES TO RADIOACTIVE WASTE TREATMENT SYSTEMS (liquid and gaseous) shall be reported to the Nuclear Regulatory Commission in the Annual Radioactive Effluents Release Report covering the period in which the change was reviewed and accepted for implementation.

Process Control Program (PCP) B.5.1.2 states that licensee initiated major changes to the solid radioactive waste treatment system shall be reported to the Nuclear Regulatory Commission in the Annual Radioactive Effluent Release Report for the period in which the change was implemented. The discussion of each change shall include the information specified in PCP B.4.1.

9.2 Description of Major Changes

There were no changes to the Process Control Program during 2015.

CARBON-14

Carbon-14 (C-14) is a naturally-occurring radionuclide with a 5730 year half life. Nuclear weapons testing in the 1950s and 1960s significantly increased the amount of C-14 in the atmosphere. Nuclear power plants also produce C-14, but the amount is infinitesimal compared to what has been distributed in the environment due to weapons testing and what is produced by natural cosmic ray interactions.

As nuclear plants have improved gaseous waste processing systems and improved fuel performance, the percentages of "principal radionuclides" in gaseous effluents have changed, and C-14 has become a larger percentage. "Principal radionuclides" are determined based on public dose contribution or the amount of activity discharged compared to other radionuclides of the same effluent type. In Revision 2 (June 2009) of Regulatory Guide 1.21 (RG 1.21), "Measuring, Evaluating, and Reporting Radioactive Material in Liquid and Gaseous Effluents and Solid Waste," the NRC recommended re-evaluating "principal radionuclides" and reporting C-14 as appropriate. In 2010 Radioactive Effluent Release Reports, virtually all U. S. nuclear power plants started reporting C-14 amounts released and resulting doses to the maximally exposed member of the public.

Because C-14 is considered a hard-to-detect radionuclide which must be chemically separated from the effluent stream before it can be measured, RG 1.21 provides the option of calculating the C-14 source term based on power generation. The Electric Power Research Institute (EPRI) developed an accepted methodology for calculating C-14, and published the results in Technical Report 1021106 (December 2010), "Estimation of Carbon-14 in Nuclear Power Plant Gaseous Effluents." Evaluation of C-14 in radioactive liquid effluents is not required because the quantity and dose contribution has been determined to be insignificant.

At Plant Farley, the annual quantity of C-14 released in gaseous effluents was estimated to be 9.28 Curies (per unit). Approximately 30% of the C-14 released is in the form of $^{14}CO_2$ and is incorporated into plants through photosynthesis. Ingestion dose results from this pathway. The remaining 70% is estimated to be organic. Both the organic and inorganic forms of C-14 contribute to inhalation dose. A child is the maximally exposed individual, and bone dose is the highest organ dose. Using the dose calculation methodology from the Farley ODCM, the resulting bone dose to a child located at the controlling receptor location would be 4.11E-01 mrem in a year which is 2.74% of the regulatory limit of 15 mrem per year (per unit) to any organ due to gaseous effluents. The resulting total body dose to a child located at the controlling receptor location would be 8.21E-02 mrem in a year which is 0.54% of the regulatory limit of 15 mrem per year (per unit) total body dose due to gaseous effluents.

Edwin I. Hatch Nuclear Plant Units 1&2;
Joseph M. Farley Nuclear Plant Units 1&2;
Vogtle Electric Generating Plant Units 1&2
Annual Radioactive Effluent Release Reports and Offsite Dose Calculation Manual for 2015

Enclosure 3

Vogtle Electric Generating Plant Units 1&2
Annual Radioactive Effluent Release Report for 2015

ACKNOWLEDGEMENT OF OWNERSHIP

The contents of this Annual Radioactive Effluent Release Report, contained herein, are true and accurate to the best of my knowledge. I understand that I am ultimately responsible for the information that has been captured within these pages.

T. Fowler / [illegible]

Chemistry Manager

SOUTHERN NUCLEAR COMPANY

VOGTLE ELECTRIC GENERATING PLANT – UNITS 1 AND 2

NRC DOCKET NOS. 50-424 AND 50-425

FACILITY OPERATING LICENSE NOS. NPF-68 AND NPF-81

ANNUAL RADIOACTIVE EFFLUENT RELEASE REPORT

FOR

JANUARY 1, 2015 TO DECEMBER 31, 2015

Prepared by: Lynn M Beasley / Lynn M Beasley

Reviewed by: Tim Fowler / [illegible]

VOGTLE ELECTRIC GENERATING PLANT
RADIOACTIVE EFFLUENT RELEASE REPORT - 2015
TABLE OF CONTENTS

SECTION	TITLE	PAGE
1.0	Liquid Effluents	8
1.1	Regulatory Requirements	8
1.1.1	Concentration Limits	8
1.1.2	Dose Limits	8
1.2	Effluent Concentration Limit (ECL)	8
1.3	Measurements and Approximations of Total Radioactivity	9
1.3.1	Total Radioactivity Determination	9
1.3.2	Total Error Estimation	11
1.4	Liquid Effluent Release Data	12
1.5	Radiological Impact Due to Liquid Releases	12
1.6	Liquid Effluents – Batch Releases	12
1.7	Liquid Effluents - Abnormal Releases	12
Table 1-1A	Liquid Effluents – Summation of All Releases Unit 1 (Quarters 1,2,3, and 4)	13
Table 1-1B	Liquid Effluents – Summation of All Releases Unit 2 (Quarters 1,2,3, and 4)	14
Table 1-1C	Liquid Effluents – Summation of All Releases Site (Quarters 1,2,3, and 4)	15
Table 1-2A	Liquid Effluents –Unit 1 (Quarters 1,2,3, and 4)	16
Table 1-2B	Liquid Effluents –Unit 2 (Quarters 1,2,3, and 4)	19

Table 1-2C	Liquid Effluents –Site (Quarters 1,2,3, and 4)	22
Table 1-3A	Doses to a Member of the Public Due to Liquid Releases Unit 1 (Quarters 1,2,3, and 4)	25
Table 1-3B	Doses to a Member of the Public Due to Liquid Releases Unit 2 (Quarters 1,2,3, and 4)	26
Table 1-3C	Doses to a Member of the Public Due to Liquid Releases Site (Quarters 1,2,3, and 4)	27
Table 1-4	Minimum Detectable Concentration - Liquid	28
Table 1-5A	Liquid Effluents Batch Release Summary Unit 1 (Quarters 1,2,3, and 4)	29
Table 1-5B	Liquid Effluents Batch Release Summary Unit 2 (Quarters 1,2,3, and 4)	30
Table 1-5C	Liquid Effluents Batch Release Summary Site (Quarters 1,2,3, and 4)	31
Table 1-6A	Liquid Effluents Abnormal Release Summary Unit 1 (Quarters 1,2,3, and 4)	32
Table 1-6B	Liquid Effluents Abnormal Release Summary Unit 2 (Quarters 1,2,3, and 4)	33
Table 1-6C	Liquid Effluents Abnormal Release Summary Site (Quarters 1,2,3, and 4)	34
2.0	Gaseous Effluents	35
2.1	Regulatory Requirements	35
2.1.1	Dose Rate Limits	35
2.1.2	Air Doses Due to Noble Gases in Gaseous Releases	35

2.1.3	Doses to a Member of the Public	35
2.2	Measurements and Approximations of Total Radioactivity	36
2.2.1	Sample Collection and Analysis	36
2.2.2	Total Quantities of Radioactivity, Dose Rates, and Cumulative Doses	37
2.2.2.1	Fission and Activation Gases	37
2.2.2.2	Radioiodines, Tritium and Particulate Releases	37
2.2.2.3	Gross Alpha Release	37
2.2.3	Total Error Estimation	38
2.3	Gaseous Effluent Release Data	39
2.4	Radiological Impact Due to Gaseous Releases	40
2.5	Gaseous Effluents - Batch Releases	40
2.6	Gaseous Effluents - Abnormal Releases	40
Table 2-1A	Gaseous Effluents Summation of All Releases Unit 1 (Quarters 1,2,3, and 4)	41
Table 2-1B	Gaseous Effluents Summation of All Releases Unit 2 (Quarters 1,2,3, and 4)	42
Table 2-1C	Gaseous Effluents Summation of All Releases Site (Quarters 1,2,3, and 4)	43
Table 2-2A	Gaseous Effluents Mixed Mode Releases Unit 1 (Quarters 1,2,3, and 4)	44
Table 2-2B	Gaseous Effluents Mixed Mode Releases Unit 2 (Quarters 1,2,3, and 4)	46

Table 2-2C	Gaseous Effluents Mixed Mode Releases Site (Quarters 1,2,3, and 4)	48
Table 2-3A	Gaseous Effluents Ground Level Releases Unit 1 (Quarters 1,2,3, and 4)	50
Table 2-3B	Gaseous Effluents Ground Level Releases Unit 2 (Quarters 1,2,3, and 4)	52
Table 2-3C	Gaseous Effluents Ground Level Releases Site (Quarters 1,2,3, and 4)	54
Table 2-4A	Gaseous Effluents Ground Level Releases Unit 1 (Quarters 1,2,3, and 4)	56
Table 2-4B	Gaseous Effluents Ground Level Releases Unit 2 (Quarters 1,2,3, and 4)	57
Table 2-4C	Gaseous Effluents Ground Level Releases Site (Quarters 1,2,3, and 4)	58
Table 2-5A	Gaseous Effluents Ground Level Releases Unit 1 (Quarters 1,2,3, and 4)	59
Table 2-5B	Gaseous Effluents Ground Level Releases Unit 2 (Quarters 1,2,3, and 4)	60
Table 2-5C	Gaseous Effluents Ground Level Releases Site (Quarters 1,2,3, and 4)	61
Table 2-6	Minimum Detectable Concentrations - Gaseous	62
Table 2-7A	Gaseous Effluents - Batch Release Summary Unit 1 (Quarters 1,2,3, and 4)	63

Table 2-7B	Gaseous Effluents - Batch Release Summary Unit 2 (Quarters 1,2,3, and 4)	64
Table 2-7C	Gaseous Effluents - Batch Release Summary Site (Quarters 1,2,3, and 4)	65
Table 2-8A	Gaseous Effluents - Abnormal Release Summary Unit 1 (Quarters 1,2,3, and 4)	66
Table 2-8B	Gaseous Effluents - Abnormal Release Summary Unit 2 (Quarters 1,2,3, and 4)	67
Table 2-8C	Gaseous Effluents - Abnormal Release Summary Site (Quarters 1,2,3, and 4)	68
3.0	Solid Waste	69
3.1	Regulatory Requirements	69
3.1.1	Solid Radioactive Waste System	69
3.1.2	Reporting Requirements	69
3.2	Solid Waste Data	69
Table 3-1	Solid Waste and Irradiated Fuel Shipments	70
4.0	Doses to Members of the Public Inside the Site Boundary	76
4.1	Regulatory Requirements	76
4.2	Demonstration of Compliance	76
Table 4-1	Doses to Members of the Public Due to Activities Inside the Site Boundary	77
5.0	Total Dose from Uranium Fuel Cycle (40CFR190)	79
5.1	Regulatory Requirements	79
5.2	Demonstration of Compliance	79

6.0	Meteorological Data	79
7.0	Program Deviations	79
7.1	Inoperable Liquid or Gaseous Effluent Monitoring Instrumentation	79
7.1.1	Regulatory Requirement	79
7.1.2	Description of Deviations	80
7.2	Tanks Exceeding Curie Content Limits	80
7.2.1	Regulatory Requirements	80
7.2.2	Description of Deviations	80
8.0	Changes to the Vogtle Electric Generating Plant Offsite Dose Calculation Manual (ODCM)	81
8.1	Regulatory Requirements	81
8.2	Description of Changes	81
9.0	Major Changes to Liquid, Gaseous, or Solid Radwaste Treatment Systems	82
9.1	Regulatory Requirements	82
9.2	Description of Major Changes	82
Appendix A	Carbon-14	83

1.0 Liquid Effluents

1.1 Regulatory Requirements

1.1.1 Concentration Limits

In accordance with Technical Specification 5.5.4.b, the concentration of radioactive material released in liquid effluents to UNRESTRICTED AREAS shall be limited at all times to ten times the concentrations specified in 10 CFR 20, Appendix B, Table 2, Column 2 for radionuclides other than dissolved or entrained noble gases. For dissolved or entrained noble gases, the concentration shall be limited to 1 E-04 μCi/ml total activity.

1.1.2 Dose Limits

The dose or dose commitment to a MEMBER OF THE PUBLIC from radioactive materials in liquid effluents released, from each unit, to UNRESTRICTED AREAS shall be limited as follows:

a. During any calendar quarter to less than or equal to 1.5 mrems to the whole body and to less than or equal to 5 mrems to any organ, and

b. During any calendar year to less than or equal to 3 mrems to the whole body and to less than or equal to 10 mrems to any organ.

1.2 Effluent Concentration Limit (ECL)

ECL values used for determining the allowable liquid radwaste release rates and concentrations for the principal gamma emitters, I-131, tritium, Sr-89, Sr-90 and Fe-55 are taken from 10 CFR Part 20, Appendix B, Table 2, Column 2. A tolerance factor of up to 10 is utilized to allow flexibility in establishing practical monitor set points which can accommodate effluent releases at concentrations higher than the ECL values stated in 10 CFR 20, Appendix B, Table 2, Column 2.

For dissolved or entrained noble gases in liquid radwaste, the ECL is 1E-04 μCi/ml total activity.

For gross alpha in liquid radwaste, the ECL is 2 E-09 μCi/ml.

For all the above radionuclides or categories of radioactivity, the overall ECL fraction is determined in accordance with 10 CFR Part 20, Appendix B. The method utilizing the ECL fraction to determine release rates and liquid radwaste effluent radiation monitor set points is described in Subsection 1.3 of this report.

1.3 Measurements and Approximations of Total Radioactivity

1.3.1 Total Radioactivity Determination

Prior to the release of any tank containing liquid radwaste, and following the required recirculation, samples are collected and analyzed in accordance with the Offsite Dose Calculation Manual (ODCM) Table 2-3 "Radioactive Liquid Waste Sampling and Analysis Program". A sample from each tank which is planned for release is analyzed for principal gamma emitters, I-131, and dissolved and entrained noble gases by gamma spectroscopy. Monthly and quarterly composites are prepared for analysis by extracting aliquots from each sample taken from the tanks, which are released. Liquid radwaste sample analyses are performed as follows:

MEASUREMENT	FREQUENCY	METHOD
1. Gamma Isotopic	Each Batch	Gamma Spectroscopy with computerized data reduction.
2. Dissolved or entrained noble gases	Each Batch	Gamma Spectroscopy with computerized data reduction
3. Tritium	Monthly Composite	Distillation and liquid scintillation counting
4. Gross Alpha	Monthly Composite	Gas flow proportional counting
5. Sr-89 & Sr-90	Quarterly Composite	Chemical separation and gas flow proportional or scintillation counting
6. Fe-55	Quarterly Composite	Chemical separation and liquid scintillation counting

1.3.1 Total Radioactivity Determination cont'd

Gamma isotopic measurements are performed using germanium detectors with a resolution of 2.1 keV or lower. A peak search of the resulting gamma ray spectrum is performed by the computer system. Energy and net count data for all significant peaks are determined, and a quantitative reduction or MDC calculation is performed. This ensures that the MDC's are met for the nuclides specified in ODCM Chapter 10 (i.e., Mn-54, Fe-59, Co-58, Co-60, Zn-65, Mo-99, Cs-134, Cs-137, Ce-141 and Ce-144). The quantitative calculations, corrections for counting time, decay time, sample volume, sample geometry, detector efficiency, baseline counts, branching ratio and MDC calculations, are made based on the counts at the location in the spectrum where the peak for that radionuclide would be located, if present.

Tritium, Gross Alpha, Sr-89, Sr-90, Fe-55 and Ni-63 are, in some cases, analyzed offsite.

ECL fraction is determined using radionuclide concentrations of a tank planned for release, the most current results available for tritium, gross alpha, Sr-89, Sr-90, Fe-55 and Ni-63 and the corresponding ECL values.
This ECL fraction is used, with appropriate safety factors, tolerance factors, and the minimum assured dilution stream flow to calculate maximum permissible release rates and a liquid effluent monitor setpoint. The monitor setpoint is calculated to assure that the limits of the Offsite Dose Calculation Manual (ODCM) are not exceeded.

A monitor reading in excess of the calculated setpoint results in an automatic termination of the liquid radwaste discharge. Liquid effluent discharge is also automatically terminated if the dilution stream flow rate falls below the minimum assured dilution flow rate used in the setpoint calculations and established as a setpoint on the dilution stream flow monitor.

Radionuclide concentrations, safety factors, dilution stream flow rate, and liquid effluent radiation monitor calibrations are entered into the computer and a pre-release printout is generated. If the release is not permissible, appropriate warnings will be displayed on the computer screen. If the release is permissible, it is approved by the Chemistry Department and sent to the Operations Department for release. When the release is completed, the necessary data from the release (i.e., release volume, etc.) is provided by the Operations Department to the Chemistry Department. This data is inputed to the computer and a post-release printout is generated. The post release printout contains the actual release rates, release concentrations and quantities, actual dilution flow, and calculated doses to an individual.

Typically achieved liquid effluent sample analyses minimum detectable concentrations are reported in Table 1-4.

1.3.2 Total Error Estimation

The total or maximum error associated with the effluent measurement includes the cumulative errors resulting from the total operation of sampling and measurement. Because it may be very difficult to assign error terms for each parameter affecting the final measurement, detailed statistical evaluation of error is not suggested. The objective should be to obtain an overall estimate of the error associated with measurements of radioactive materials released in effluents (Reference Reg. Guide 1.21 Rev 1). Total Error is calculated by the root mean square method. The root mean square value is the square root of the arithmetic mean (average) of the squares of the original values.

a. Fission and activation total release was calculated from sample analysis results and release point flow rates.

Sampling and statistical error	10%
Counting Equipment Calibration	10%
Tank Volumes and System Flow Rates	20%
TOTAL ERROR	24.5%

b. Total Tritium release was calculated from sample analysis results and release point volumes.

Sampling and statistical errors	10%
Counting equipment calibration	10%
Tank volumes and system flow rate	20%
TOTAL ERROR	24.5%

c. Dissolved and entrained gases were calculated from sample analysis results and release point volumes.

Sampling and statistical error	20%
Counting equipment calibration	10%
Tank volumes and system flow rate	20%
TOTAL ERROR	30%

d. Gross alpha radioactivity was calculated from sample analysis results and release point volumes.

Sampling and statistical error	10%
Counting Equipment calibration	10%
Tank volumes and system flowrates	20%
TOTAL ERROR	24.5%

1.3.2 Total Error Estimation cont'd

e. Volume of waste prior to dilution was calculated from level indicators on the tanks and pump discharge flow rates and times.

Level Indicator error	10%
Operator Interpretation of gauge	10%
TOTAL ERROR	14%

f. Volume of dilution water used was calculated from flow totalizers and pump discharge flow rates and times.

Flow totalizer error	10%
Operator interpretation of gauge	10%
TOTAL ERROR	14%

g. Gross alpha, Sr-89, Sr-90, Fe-55, Ni-63 and H-3 radioactivity has an additional error associated with sample compositing.

Compositing sample error	5%

1.4 Liquid Effluent Release Data

Regulatory Guide 1.21 Rev. 1 Tables 2A and 2B are found in this report as Tables 1-1A, 1-1B, 1-1C, 1-2A, 1-2B and 1-2C. Data is presented on a quarterly basis as required by Regulatory Guide 1.21 Rev. 1 for all four quarters.

1.5 Radiological Impact Due to Liquid Releases

Doses to an individual due to radioactivity in liquid effluent were calculated in accordance with the Offsite Dose Calculation Manual. Results are presented in Table 1-3A for Unit 1 and 1-3B for Unit 2, for all four quarters.

1.6 Liquid Effluents – Batch Releases

Batch release information for liquid effluents is presented in Table 1-5A for Unit 1 and Table 1-5B for Unit 2.

1.7 Liquid Effluents - Abnormal Releases

There were no abnormal liquid releases during 2015

Table 1-1A

Vogtle Electric Generating Plant
RADIOACTIVE EFFLUENT RELEASE REPORT - 2015
Liquid Effluents - Summation Of All Releases
Unit: 1
Starting: 1-Jan- 2015 Ending: 31-Dec-2015

Type of Effluent	Units	1ST Quarter	2ND Quarter	3RD Quarter	4TH Quarter
A. Fission And Activation Products					
1. Total Release (not including tritium, gases, alpha)	Curies	5.88E-03	8.04E-03	2.45E-02	1.54E-02
2. Average diluted concentration during period	µCi/mL	1.12E-09	1.19E-09	3.05E-09	2.93E-09
3. Percent of Applicable Limit	%	*	*	*	*
B. Tritium					
1. Total Release	Curies	6.32E+01	3.32E+02	3.22E+02	3.46E+02
2. Average diluted Concentration during period	µCi/mL	1.20E-05	4.90E-05	4.01-05	6.58E-05
3. Percent of Applicable Limit	%	*	*	*	*
C. Dissolved and Entrained Gases					
1. Total Release	Curies	0.00E+00	0.00E+00	0.00E+00	4.05E-05
2. Average diluted Concentration during period	µCi/mL	0.00E+00	0.00E+00	0.00E+00	7.69E-12
3. Percent of Applicable Limit	%	*	*	*	*
D: Gross Alpha Radioactivity					
1. Total Release	Curies	0.00E+00	0.00E+00	0.00E+00	0.00E+00
E: Waste Vol Release (Pre-Dilution)	Liters	3.20E+07	2.72E+07	3.23E+07	4.48E+07
F. Volume of Dilution Water Used	Liters	5.24E+09	6.74E+09	8.03E+09	5.26E+09

* Applicable limits are expressed in terms of dose. See Tables 1-3A and 1-3B of this report.

Table 1-1B

Vogtle Electric Generating Plant
RADIOACTIVE EFFLUENT RELEASE REPORT - 2015
Liquid Effluents - Summation Of All Releases
Unit: 2
Starting: 1-Jan- 2015 Ending: 31-Dec-2015

Type of Effluent	Units	1ST Quarter	2ND Quarter	3RD Quarter	4TH Quarter
A. Fission And Activation Products					
1. Total Release (not including tritium, gases, alpha)	Curies	3.69E-03	2.86E-03	8.72E-03	3.86E-03
2. Average diluted concentration during period	µCi/mL	7.06E-10	4.50E-10	1.30E-09	7.54E-10
3. Percent of Applicable Limit	%	*	*	*	*
B. Tritium					
1. Total Release	Curies	6.05E+01	8.81E+01	2.06E+02	3.10E+02
2. Average diluted Concentration during period	µCi/mL	1.15E-05	1.39E-05	3.07E-05	6.05E-05
3. Percent of Applicable Limit	%	*	*	*	*
C. Dissolved and Entrained Gases					
1. Total Release	Curies	0.00E+00	0.00E+00	0.00E+00	1.41E-04
2. Average diluted Concentration during period	µCi/mL	0.00E+00	0.00E+00	0.00E+00	2.75E-11
3. Percent of Applicable Limit	%	*	*	*	*
D. Gross Alpha Radioactivity					
1. Total Release	Curies	0.00E+00	0.00E+00	0.00E+00	0.00E+00
E. Waste Vol Release (Pre-Dilution)	Liters	2.89E+07	2.83E+07	2.34E+07	2.40E+07
F. Volume of Dilution Water Used	Liters	5.23E+09	6.35E+09	6.70E+09	5.12E+09

* Applicable limits are expressed in terms of dose. See Tables 1-3A and 1-3B of this report.

Table 1-1C

Vogtle Electric Generating Plant
RADIOACTIVE EFFLUENT RELEASE REPORT - 2015
Liquid Effluents - Summation Of All Releases
Unit: Site
Starting: 1-Jan- 2015 Ending: 31-Dec-2015

Type of Effluent	Units	1ST Quarter	2ND Quarter	3RD Quarter	4TH Quarter
A. Fission And Activation Products					
1. Total Release (not including tritium, gases, alpha)	Curies	9.57E-03	1.09E-02	3.33E-02	1.93E-02
2. Average diluted concentration during period	µCi/mL	9.11E-10	8.32E-10	2.26E-09	1.85E-09
3. Percent of Applicable Limit	%	*	*	*	*
B. Tritium					
1. Total Release	Curies	1.24E+02	4.20E+02	5.28E+02	6.56E+02
2. Average diluted Concentration during period	µCi/mL	1.18E-05	3.21E-05	3.59E-05	6.31E-05
3. Percent of Applicable Limit	%	*	*	*	*
C. Dissolved and Entrained Gases					
1. Total Release	Curies	0.00E+00	0.00E+00	0.00E+00	1.82E-04
2. Average diluted Concentration during period	µCi/mL	0.00E+00	0.00E+00	0.00E+00	1.74E-11
3. Percent of Applicable Limit	%	*	*	*	*
D. Gross Alpha Radioactivity					
1. Total Release	Curies	0.00E+00	0.00E+00	0.00E+00	0.00E+00
E. Waste Vol Release (Pre-Dilution)	Liters	6.09E+07	5.55E+07	5.57E+07	6.88E+07
F. Volume of Dilution Water Used	Liters	1.05E+10	1.31E+10	1.47E+10	1.04E+10

* Applicable limits are expressed in terms of dose. See Tables 1-3A and 1-3B of this report.

Table 1-2 A

Vogtle Electric Generating Plant
RADIOACTIVE EFFLUENT RELEASE REPORT - 2015
Liquid Effluents
Unit: 1
Starting: 1-Jan-2015 Ending: 31-Dec-2015

Continuous Mode

Nuclides Released	Units	1ST Quarter	2ND Quarter	3RD Quarter	4TH Quarter
Fission & Activation Products					
No Nuclides Found	Curies	0.00E+00	0.00E+00	0.00E+00	0.00E+00
Tritium					
H-3	Curies	8.56E-02	1.19E-01	1.10E-01	1.15E-01
Dissolved And Entrained Gases					
No Nuclides Found	Curies	0.00E+00	0.00E+00	0.00E+00	0.00E+00
Gross Alpha Radioactivity					
No Nuclides Found	Curies	0.00E+00	0.00E+00	0.00E+00	0.00E+00

*Zeroes in this table indicate that no radioactivity was present at detectable levels. See Table 1-4 for typical minimum detectable concentrations.

Table 1-2 A

Vogtle Electric Generating Plant
RADIOACTIVE EFFLUENT RELEASE REPORT - 2015
Liquid Effluents
Unit: 1
Starting: 1-Jan-2015 Ending: 31-Dec-2015

		Batch Mode			
Nuclides Released	**Units**	**1ST Quarter**	**2ND Quarter**	**3RD Quarter**	**4TH Quarter**
Fission & Activation Products					
Mn-54	Curies	6.53E-05	1.80E-04	3.24E-03	5.28E-04
Fe-55	Curies	1.18E-03	1.26E-03	1.48E-03	3.42E-04
Co-57	Curies	9.93E-06	1.66E-05	4.65E-05	1.51E-05
Co-58	Curies	2.05E-03	2.42E-03	5.02E-03	1.25E-02
Co-60	Curies	7.58E-04	1.25E-03	2.82E-03	9.39E-04
Ni-63	Curies	1.16E-03	1.93E-03	8.29E-03	7.91E-04
Zn-65	Curies	0.00E+00	0.00E+00	0.00E+00	9.32E-06
Sr-90	Curies	0.00E+00	0.00E+00	5.58E-06	0.00E+00
Nb-95	Curies	8.65E-07	0.00E+00	0.00E+00	2.00E-06
Te-125M	Curies	0.00E+00	0.00E+00	1.76E-03	0.00E+00
Sb-125	Curies	2.76E-04	6.53E-04	1.43E-03	9.79E-05
I-131	Curies	0.00E+00	0.00E+00	0.00E+00	7.15E-08
Cs-134	Curies	1.05E-05	0.00E+00	0.00E+00	4.76E-07
Cs-137	Curies	3.75E-04	3.42E-04	4.48E-04	1.67E-04
Total For Period	**Curies**	**5.89E-03**	**8.05E-03**	**2.45E-02**	**1.54E-02**

Table 1-2 A

Vogtle Electric Generating Plant
RADIOACTIVE EFFLUENT RELEASE REPORT - 2015
Liquid Effluents
Unit: 1
Starting: 1-Jan-2015 Ending: 31-Dec-2015

		Batch Mode			
Nuclides Released	**Units**	**1ST Quarter**	**2ND Quarter**	**3RD Quarter**	**4TH Quarter**
Tritium					
H-3	Curies	6.31E+01	3.31E+02	3.22E+02	3.46E+02
Dissolved And Entrained Gases					
Xe-133	Curies	0.00E+00	0.00E+00	0.00E+00	4.05E-05
Gross Alpha Radioactivity					
No Nuclides Found	Curies	0.00E+00	0.00E+00	0.00E+00	0.00E+00

*Zeroes in this table indicate that no radioactivity was present at detectable levels. See Table 1-4 for typical minimum detectable concentrations.

Table 1-2 B

Vogtle Electric Generating Plant
RADIOACTIVE EFFLUENT RELEASE REPORT - 2015
Liquid Effluents
Unit: 2
Starting: 1-Jan-2015 Ending: 31-Dec-2015

		Continuous Mode			
Nuclides Released	**Units**	**1ST Quarter**	**2ND Quarter**	**3RD Quarter**	**4TH Quarter**
Fission & Activation Products					
No Nuclides Found	Curies	0.00E+00	0.00E+00	0.00E+00	0.00E+00
Tritium					
H-3	Curies	5.67E-02	9.78E-02	1.08E-01	9.39E-02
Dissolved And Entrained Gases					
No Nuclides Found	Curies	0.00E+00	0.00E+00	0.00E+00	0.00E+00
Gross Alpha Radioactivity					
No Nuclides Found	Curies	0.00E+00	0.00E+00	0.00E+00	0.00E+00

*Zeroes in this table indicate that no radioactivity was present at detectable levels. See Table 1-4 for typical minimum detectable concentrations.

Table 1-2 B

Vogtle Electric Generating Plant
RADIOACTIVE EFFLUENT RELEASE REPORT - 2015
Liquid Effluents
Unit: 2
Starting: 1-Jan-2015 Ending: 31-Dec-2015

		Batch Mode			
Nuclides Released	**Units**	**1ST Quarter**	**2ND Quarter**	**3RD Quarter**	**4TH Quarter**
Fission & Activation Products					
Mn-54	Curies	9.50E-05	4.73E-05	2.13E-03	2.36E-04
Fe-55	Curies	1.90E-04	3.04E-04	3.13E-04	2.00E-04
Co-57	Curies	2.65E-05	1.45E-05	1.15E-05	0.00E+00
Co-58	Curies	2.02E-03	1.44E-03	6.66E-04	2.91E-03
Co-60	Curies	4.68E-04	5.03E-04	9.09E-04	2.17E-04
Ni-63	Curies	6.53E-04	3.04E-04	2.86E-03	2.89E-04
Sr-90	Curies	7.29E-07	0.00E+00	0.00E+00	0.00E+00
Te-125M	Curies	0.00E+00	0.00E+00	1.47E-03	0.00E+00
Sb-125	Curies	1.57E-04	1.85E-04	1.55E-04	9.20E-06
Cs-137	Curies	7.83E-05	5.20E-05	2.03E-04	1.96E-06
Total For Period	**Curies**	**3.69E-03**	**2.86E-03**	**8.72E-03**	**3.86E-03**

*Zeroes in this table indicate that no radioactivity was present at detectable levels. See Table 1-4 for typical minimum detectable concentrations.

Table 1-2 B

Vogtle Electric Generating Plant
RADIOACTIVE EFFLUENT RELEASE REPORT - 2015
Liquid Effluents
Unit: 2
Starting: 1-Jan-2015 Ending: 31-Dec-2015

		Batch Mode			
Nuclides Released	**Units**	**1ST Quarter**	**2ND Quarter**	**3RD Quarter**	**4TH Quarter**
Tritium					
H-3	Curies	6.05E+01	8.80E+01	2.06E+02	3.10E+02
Dissolved And Entrained Gases					
Xe-133	Curies	0.00E+00	0.00E+00	0.00E+00	1.41E-04
Gross Alpha Radioactivity					
No Nuclides Found	Curies	0.00E+00	0.00E+00	0.00E+00	0.00E+00

*Zeroes in this table indicate that no radioactivity was present at detectable levels. See Table 1-4 for typical minimum detectable concentrations.

Table 1-2 C

Vogtle Electric Generating Plant
RADIOACTIVE EFFLUENT RELEASE REPORT - 2015
Liquid Effluents
Unit: Site
Starting: 1-Jan-2015 Ending: 31-Dec-2015

		Continuous Mode			
Nuclides Released	**Units**	**1ST Quarter**	**2ND Quarter**	**3RD Quarter**	**4TH Quarter**
Fission & Activation Products					
No Nuclides Found	Curies	0.00E+00	0.00E+00	0.00E+00	0.00E+00
Tritium					
H-3	Curies	1.42E-01	2.17E-01	2.18E-01	2.08E-01
Dissolved And Entrained Gases					
No Nuclides Found	Curies	0.00E+00	0.00E+00	0.00E+00	0.00E+00
Gross Alpha Radioactivity					
No Nuclides Found	Curies	0.00E+00	0.00E+00	0.00E+00	0.00E+00

*Zeroes in this table indicate that no radioactivity was present at detectable levels. See Table 1-4 for typical minimum detectable concentrations.

Table 1-2 C

Vogtle Electric Generating Plant
RADIOACTIVE EFFLUENT RELEASE REPORT - 2015
Liquid Effluents
Unit: Site
Starting: 1-Jan-2015 Ending: 31-Dec-2015

		Batch Mode			
Nuclides Released	**Units**	**1ST Quarter**	**2ND Quarter**	**3RD Quarter**	**4TH Quarter**
Fission & Activation Products					
Mn-54	Curies	1.60E-04	2.27E-04	5.37E-03	7.63E-04
Fe-55	Curies	1.37E-03	1.57E-03	1.79E-03	5.43E-04
Co-57	Curies	3.64E-05	3.11E-05	5.80E-05	1.51E-05
Co-58	Curies	4.07E-03	3.86E-03	5.68E-03	1.55E-02
Co-60	Curies	1.23E-03	1.76E-03	3.73E-03	1.16E-03
Ni-63	Curies	1.81E-03	2.31E-03	1.11E-02	1.08E-03
Zn-65	Curies	0.00E+00	0.00E+00	0.00E+00	9.32E-06
Sr-90	Curies	7.29E-07	1.11E-07	5.58E-06	0.00E+00
Nb-95	Curies	8.65E-07	0.00E+00	0.00E+00	2.00E-06
Te-125M	Curies	0.00E+00	0.00E+00	3.24E-03	0.00E+00
Sb-125	Curies	4.33E-04	8.38E-04	1.59E-03	1.07E-04
I-131	Curies	0.00E+00	0.00E+00	0.00E+00	7.15E-08
Cs-134	Curies	1.05E-05	0.00E+00	0.00E+00	4.76E-07
Cs-137	Curies	4.53E-04	3.94E-04	6.52E-04	1.69E-04
Total For Period	**Curies**	**9.73E-03**	**1.10E-02**	**3.33E-02**	**1.93E-02**

*Zeroes in this table indicate that no radioactivity was present at detectable levels. See Table 1-4 for typical minimum detectable concentrations.

Table 1-2 C

Vogtle Electric Generating Plant
RADIOACTIVE EFFLUENT RELEASE REPORT - 2015
Liquid Effluents
Unit: Site
Starting: 1-Jan-2015 Ending: 31-Dec-2015

		Batch Mode			
Nuclides Released	**Units**	**1ST Quarter**	**2ND Quarter**	**3RD Quarter**	**4TH Quarter**
Tritium					
H-3	Curies	1.24E+02	4.19E+02	5.28E+02	6.56E+02
Dissolved And Entrained Gases					
Xe-133	Curies	0.00E+00	0.00E+00	0.00E+00	1.82E-04
Gross Alpha Radioactivity					
No Nuclides Found	Curies	0.00E+00	0.00E+00	0.00E+00	0.00E+00

*Zeroes in this table indicate that no radioactivity was present at detectable levels. See Table 1-4 for typical minimum detectable concentrations.

Table 1-3 A

Vogtle Electric Generating Plant
RADIOACTIVE EFFLUENT RELEASE REPORT - 2015
Doses to a member of the public due to Liquid Releases
Unit: 1
Starting: 1-Jan-2015 Ending: 31-Dec-2015

Cumulative Doses Per Quarter

Organ	ODCM Lmt	Units	1ST Qtr	% ODCM	2ND Qtr	% ODCM	3RD Qtr	% ODCM	4TH Qtr	% ODCM
Thyroid	5.00E+00	mRem	2.08E-03	4.15E-02	1.05E-02	2.09E-01	9.42E-03	1.88E-01	1.25E-02	2.50E-01
GI-Lli	5.00E+00	mRem	2.21E-03	4.42E-02	1.09E-02	2.17E-01	1.14E-02	2.28E-01	1.33E-02	2.67E-01
Lung	5.00E+00	mRem	2.41E-03	4.81E-02	1.20E-02	2.41E-01	1.28E-02	2.56E-01	1.30E-02	2.59E-01
Total Body	1.50E+00	mRem	2.92E-03	1.95E-01	1.25E-02	8.32E-01	1.25E-02	8.33E-01	1.38E-02	9.22E-01
Kidney	5.00E+00	mRem	2.49E-03	4.99E-02	1.15E-02	2.29E-01	1.12E-02	2.24E-01	1.32E-02	2.63E-01
Bone	5.00E+00	mRem	1.50E-03	3.00E-02	3.71E-03	7.42E-02	9.24E-03	1.85E-01	2.08E-03	4.15E-02
Liver	5.00E+00	mRem	3.36E-03	6.72E-02	1.36E-02	2.71E-01	1.43E-02	2.87E-01	1.45E-02	2.90E-01

Cumulative Doses per Year

Organ	ODCM Lmt	Units	Year to Ending Date	% ODCM	Receptor	Limit
Liver	1.00E+01	mRem	4.58E-02	4.58E-01	Maximum Individual Liquid	Liquid Effluent Organ Annual
Bone	1.00E+01	mRem	1.65E-02	1.65E-01	Maximum Individual Liquid	Liquid Effluent Organ Annual
Kidney	1.00E+01	mRem	3.83E-02	3.83E-01	Maximum Individual Liquid	Liquid Effluent Organ Annual
Total Body	3.00E+00	mRem	4.17E-02	1.39E+00	Maximum Individual Liquid	Liquid Effluent TB Annual
Lung	1.00E+01	mRem	4.02E-02	4.02E-01	Maximum Individual Liquid	Liquid Effluent Organ Annual
GI-Lli	1.00E+01	mRem	3.78E-02	3.78E-01	Maximum Individual Liquid	Liquid Effluent Organ Annual
Thyroid	1.00E+01	mRem	3.45E-02	3.45E-01	Maximum Individual Liquid	Liquid Effluent Organ Annual

Table 1-3 B

Vogtle Electric Generating Plant
RADIOACTIVE EFFLUENT RELEASE REPORT - 2015
Doses to a member of the public due to Liquid Releases
Unit: 2
Starting: 1-Jan-2015 Ending: 31-Dec-2015

Cumulative Doses Per Quarter

Organ	ODCM Lmt	Units	1ST Qtr	% ODCM	2ND Qtr	% ODCM	3RD Qtr	% ODCM	4TH Qtr	% ODCM
Thyroid	5.00E+00	mRem	1.90E-03	3.81E-02	2.55E-03	5.10E-02	6.41E-03	1.28E-01	1.26E-02	2.53E-01
Lung	5.00E+00	mRem	2.38E-03	4.76E-02	3.01E-03	6.03E-02	6.97E-03	1.39E-01	1.27E-02	2.54E-01
Total Body	1.50E+00	mRem	2.83E-03	1.89E-01	2.87E-03	1.91E-01	7.86E-03	5.24E-01	1.27E-02	8.45E-01
Kidney	5.00E+00	mRem	2.36E-03	4.72E-02	2.71E-03	5.42E-02	7.43E-03	1.49E-01	1.26E-02	2.53E-01
Bone	5.00E+00	mRem	1.79E-03	3.58E-02	5.71E-04	1.14E-02	3.74E-03	7.49E-02	3.08E-04	6.17E-03
GI-Lli	5.00E+00	mRem	2.08E-03	4.15E-02	2.69E-03	5.37E-02	7.47E-03	1.49E-01	1.29E-02	2.58E-01
Liver	5.00E+00	mRem	3.32E-03	6.65E-02	3.04E-03	6.08E-02	8.80E-03	1.76E-01	1.27E-02	2.54E-01

Cumulative Doses per Year

Organ	ODCM Lmt	Units	Year to Ending Date	% ODCM	Receptor	Limit
GI-Lli	1.00E+01	mRem	2.51E-02	2.51E-01	Maximum Individual Liquid	Liquid Effluent Organ Annual
Kidney	1.00E+01	mRem	2.51E-02	2.51E-01	Maximum Individual Liquid	Liquid Effluent Organ Annual
Lung	1.00E+01	mRem	2.50E-02	2.50E-01	Maximum Individual Liquid	Liquid Effluent Organ Annual
Liver	1.00E+01	mRem	2.79E-02	2.79E-01	Maximum Individual Liquid	Liquid Effluent Organ Annual
Bone	1.00E+01	mRem	6.41E-03	6.41E-02	Maximum Individual Liquid	Liquid Effluent Organ Annual
Thyroid	1.00E+01	mRem	2.35E-02	2.35E-01	Maximum Individual Liquid	Liquid Effluent Organ Annual
Total Body	3.00E+00	mRem	2.62E-02	8.75E-01	Maximum Individual Liquid	Liquid Effluent TB Annual

Table 1-3 C

Vogtle Electric Generating Plant
RADIOACTIVE EFFLUENT RELEASE REPORT - 2015
Doses to a member of the public due to Liquid Releases
Unit: Site
Starting: 1-Jan-2015 Ending: 31-Dec-2015

Cumulative Doses Per Quarter

Organ	ODCM Lmt	Units	1ST Qtr	% ODCM	2ND Qtr	% ODCM	3RD Qtr	% ODCM	4TH Qtr	% ODCM
Thyroid	5.00E+00	mRem	3.98E-03	7.96E-02	1.30E-02	2.60E-01	1.58E-02	3.17E-01	2.51E-02	5.03E-01
GI-Lli	5.00E+00	mRem	4.28E-03	8.57E-02	1.36E-02	2.71E-01	1.89E-02	3.78E-01	2.62E-02	5.25E-01
Kidney	5.00E+00	mRem	4.86E-03	9.71E-02	1.42E-02	2.84E-01	1.86E-02	3.72E-01	2.58E-02	5.16E-01
Total Body	1.50E+00	mRem	5.75E-03	3.84E-01	1.54E-02	1.02E+00	2.04E-02	1.36E+00	2.65E-02	1.77E+00
Liver	5.00E+00	mRem	6.69E-03	1.34E-01	1.66E-02	3.32E-01	2.32E-02	4.63E-01	2.72E-02	5.44E-01
Lung	5.00E+00	mRem	4.79E-03	9.58E-02	1.51E-02	3.01E-01	1.97E-02	3.95E-01	2.56E-02	5.13E-01
Bone	5.00E+00	mRem	3.29E-03	6.58E-02	4.28E-03	8.56E-02	1.30E-02	2.60E-01	2.38E-03	4.77E-02

Cumulative Doses per Year

Organ	ODCM Lmt	Units	Year to Ending Date	% ODCM	Receptor	Limit
Lung	1.00E+01	mRem	6.52E-02	6.52E-01	Maximum Individual Liquid	Liquid Effluent Organ Annual
Bone	1.00E+01	mRem	2.29E-02	2.29E-01	Maximum Individual Liquid	Liquid Effluent Organ Annual
Liver	1.00E+01	mRem	7.37E-02	7.37E-01	Maximum Individual Liquid	Liquid Effluent Organ Annual
Total Body	3.00E+00	mRem	6.80E-02	2.27E+00	Maximum Individual Liquid	Liquid Effluent TB Annual
Kidney	1.00E+01	mRem	6.35E-02	6.35E-01	Maximum Individual Liquid	Liquid Effluent Organ Annual
GI-Lli	1.00E+01	mRem	6.30E-02	6.30E-01	Maximum Individual Liquid	Liquid Effluent Organ Annual
Thyroid	1.00E+01	mRem	5.80E-02	5.80E-01	Maximum Individual Liquid	Liquid Effluent Organ Annual

Table 1-4

Vogtle Electric Generating Plant
RADIOACTIVE EFFLUENT RELEASE REPORT - 2015
MINIMUM DETECTABLE CONCENTRATIONS – LIQUID SAMPLE ANALYSES

Starting: 1-Jan-2015 **Ending: 31-Dec-2015**

The values in this table represent a priori Minimum Detectable Concentrations (MDC) that are typically achieved in laboratory analyses of liquid radwaste samples.

RADIONUCLIDE	MDC	UNITS
Mn-54	2.73E-08	µCi/ml
Fe-59	8.33E-08	µCi/ml
Co-58	3.78E-08	µCi/ml
Co-60	6.76E-08	µCi/ml
Zn-65	1.32E-07	µCi/ml
Mo-99	4.31E-07	µCi/ml
Cs-134	3.06E-08	µCi/ml
Cs-137	4.51E-08	µCi/ml
Ce-141	6.99E-08	µCi/ml
Ce-144	2.95E-07	µCi/ml
I-131	5.97E-08	µCi/ml
Xe-133	9.11E-08	µCi/ml
Xe-135	4.27E-08	µCi/ml
Fe-55	1.00E-06	µCi/ml
Sr-89	5.00E-08	µCi/ml
Sr-90	7.00E-09	µCi/ml
H-3	2.00E-06	µCi/ml
Gross Alpha	7.00E-08	µCi/ml

Table 1-5 A

Vogtle Electric Generating Plant
RADIOACTIVE EFFLUENT RELEASE REPORT - 2015
Liquid Effluents - Batch Release Summary
Unit: 1
Starting: 1-Jan-2015 Ending: 31-Dec-2015

Liquid Releases	Units	1ST Quarter	2ND Quarter	3RD Quarter	4TH Quarter	Year Totals
1. Number of batch releases		17	19	22	32	90
2. Total time period for Batch releases	(Minutes)	2.19E+03	6.19E+03	5.78E+03	6.79E+03	2.10E+04
3. Maximum time period for a batch release	(Minutes)	3.34E+02	1.08E+03	6.57E+02	8.40E+02	1.08E+03
4. Average time period for a batch release	(Minutes)	1.29E+02	3.26E+02	2.63E+02	2.12E+02	2.33E+02
5. Minimum time period for a batch release	(Minutes)	1.30E+01	6.80E+01	6.00E+01	4.10E+01	1.30E+01
6. Average stream flow during periods of release of liquid effluent into a flowing stream *	(CFS)	7.21E+03	7.33E+03	6.11E+03	1.48E+04	**Yearly Average** 8.87E+03

*Average river flowrate taken from USGS Monitoring Station 02197500, Savannah River at Burton's Ferry Bridge near Millhaven, GA. 32 miles downstream of Plant Vogtle.

Table 1-5 B

Vogtle Electric Generating Plant
RADIOACTIVE EFFLUENT RELEASE REPORT - 2015
Liquid Effluents - Batch Release Summary
Unit: 2
Starting: 1-Jan-2015 Ending: 31-Dec-2015

Liquid Releases	Units	1ST Quarter	2ND Quarter	3RD Quarter	4TH Quarter	Year Totals
1. Number of batch releases		4	6	13	13	36
2. Total time period for Batch releases	(Minutes)	4.79E+02	1.30E+03	3.91E+03	5.28E+03	1.10E+04
3. Maximum time period for a batch release	(Minutes)	2.71E+02	4.15E+02	6.56E+02	8.20E+02	8.20E+02
4. Average time period for a batch release	(Minutes)	1.20E+02	2.17E+02	3.01E+02	4.06E+02	3.06E+02
5. Minimum time period for a batch release	(Minutes)	5.90E+01	6.80E+01	7.80E+01	6.90E+01	1.30E+01
6. Average stream flow during periods of release of liquid effluent into a flowing stream *	(CFS)	7.21E+03	7.33E+03	6.11E+03	1.48E+04	**Yearly Average** 8.87E+03

*Average river flowrate taken from USGS Monitoring Station 02197500, Savannah River at Burton's Ferry Bridge near Millhaven, GA. 32 miles downstream of Plant Vogtle.

Table 1-5 C

Vogtle Electric Generating Plant
RADIOACTIVE EFFLUENT RELEASE REPORT - 2015
Liquid Effluents - Batch Release Summary
Unit: Site
Starting: 1-Jan-2015 Ending: 31-Dec-2015

Liquid Releases	Units	1ST Quarter	2ND Quarter	3RD Quarter	4TH Quarter	Year Totals
1. Number of batch releases		21	25	35	45	126
2. Total time period for Batch releases	(Minutes)	2.67E+03	7.50E+03	9.69E+03	1.21E+04	3.19E+04
3. Maximum time period for a batch release	(Minutes)	3.34E+02	1.08E+03	6.57E+02	8.40E+02	1.08E+03
4. Average time period for a batch release	(Minutes)	1.27E+02	3.00E+02	2.77E+02	2.68E+02	2.53E+02
5. Minimum time period for a batch release	(Minutes)	1.30E+01	6.80E+01	6.00E+01	4.10E+01	1.30E+01
6. Average stream flow during periods of release of liquid effluent into a flowing stream *	(CFS)	7.21E+03	7.33E+03	6.11E+03	1.48E+04	**Yearly Average** 8.87E+03

*Average river flowrate taken from USGS Monitoring Station 02197500, Savannah River at Burton's Ferry Bridge near Millhaven, GA. 32 miles downstream of Plant Vogtle.

Table 1-6 A

Vogtle Electric Generating Plant
RADIOACTIVE EFFLUENT RELEASE REPORT - 2015
Liquid Effluents - Abnormal Release Summary
Unit: 1
Starting: 1-Jan-2015 Ending: 31-Dec-2015

Liquid Releases	Units	1ST Quarter	2ND Quarter	3RD Quarter	4TH Quarter	Year Totals
1. Number of Releases		0	0	0	0	0
2. Total Time For All Releases	(Minutes)	0.00E+00	0.00E+00	0.00E+00	0.00E+00	0.00E+00
3. Maximum Time For A Release	(Minutes)	0.00E+00	0.00E+00	0.00E+00	0.00E+00	0.00E+00
4. Average Time For A Release	(Minutes)	0.00E+00	0.00E+00	0.00E+00	0.00E+00	0.00E+00
5. Minimum Time For A Release	(Minutes)	0.00E+00	0.00E+00	0.00E+00	0.00E+00	0.00E+00
6. Total activity for all releases	(Curies)	0.00E+00	0.00E+00	0.00E+00	0.00E+00	0.00E+00

Table 1-6 B

Vogtle Electric Generating Plant
RADIOACTIVE EFFLUENT RELEASE REPORT - 2015
Liquid Effluents - Abnormal Release Summary
Unit: 2
Starting: 1-Jan-2015 Ending: 31-Dec-2015

Liquid Releases	Units	1ST Quarter	2ND Quarter	3RD Quarter	4TH Quarter	Year Totals
1. Number of Releases		0	0	0	0	0
2. Total Time For All Releases	(Minutes)	0.00E+00	0.00E+00	0.00E+00	0.00E+00	0.00E+00
3. Maximum Time For A Release	(Minutes)	0.00E+00	0.00E+00	0.00E+00	0.00E+00	0.00E+00
4. Average Time For A Release	(Minutes)	0.00E+00	0.00E+00	0.00E+00	0.00E+00	0.00E+00
5. Minimum Time For A Release	(Minutes)	0.00E+00	0.00E+00	0.00E+00	0.00E+00	0.00E+00
6. Total activity for all releases	(Curies)	0.00E+00	0.00E+00	0.00E+00	0.00E+00	0.00E+00

Table 1-6 C

Vogtle Electric Generating Plant
RADIOACTIVE EFFLUENT RELEASE REPORT - 2015
Liquid Effluents - Abnormal Release Summary
Unit: Site
Starting: 1-Jan-2015 Ending: 31-Dec-2015

Liquid Releases	Units	1ST Quarter	2ND Quarter	3RD Quarter	4TH Quarter	Year Totals
1. Number of Releases		0	0	0	0	0
2. Total Time For All Releases	(Minutes)	0.00E+00	0.00E+00	0.00E+00	0.00E+00	0.00E+00
3. Maximum Time For A Release	(Minutes)	0.00E+00	0.00E+00	0.00E+00	0.00E+00	0.00E+00
4. Average Time For A Release	(Minutes)	0.00E+00	0.00E+00	0.00E+00	0.00E+00	0.00E+00
5. Minimum Time For A Release	(Minutes)	0.00E+00	0.00E+00	0.00E+00	0.00E+00	0.00E+00
6. Total activity for all releases	(Curies)	0.00E+00	0.00E+00	0.00E+00	0.00E+00	0.00E+00

2.0 Gaseous Effluents

2.1 Regulatory Requirements

The ODCM Specifications presented in this section are for Unit 1 and Unit 2.

2.1.1 Dose Rate Limits

The dose rate due to radioactive materials released in gaseous effluents from the site to areas at and beyond the SITE BOUNDARY shall be limited to the following:

a. For noble gases, Less than or equal to 500 mrems/yr. to the whole body and less than or equal to 3000 mrems/yr. to the skin and,

b. For Iodine-131, for Iodine-133, for tritium and for all radionuclides in particulate form with half lives greater than 8 days: Less than or equal to 1500 mrems/yr. to any organ.

2.1.2 Air Doses Due to Noble Gases in Gaseous Releases

The air dose due to noble gases released in gaseous effluents, from each unit, to areas at and beyond the SITE BOUNDARY shall be limited to the following:

a. During any calendar quarter: Less than or equal to 5 mrads for gamma radiation and less than or equal to 10 mrads for beta radiation, and

b. During any calendar year: Less than or equal to 10 mrads for gamma radiation and less than or equal to 20 mrads for beta radiation.

2.1.3 Doses to a Member of the Public

The dose to a MEMBER OF THE PUBLIC from Iodine-131, Iodine-133, tritium and all radionuclides in particulate form with half-lives greater than 8 days in gaseous effluents released, from each unit, to areas at and beyond the SITE BOUNDARY shall be limited to the following.

a. During any calendar quarter: Less than or equal to 7.5 mrems to any organ.

b. During any calendar year: Less than or equal to 15 mrems to any organ.

2.2 Measurements and Approximations of Total Radioactivity

2.2.1 Sample Collection and Analysis

Gaseous Effluents at the Vogtle Electric Generating Plant are currently confined to five paths: plant vents (Unit 1 and Unit 2), the condenser air ejector, the steam packing exhauster systems (Unit 1 and Unit 2), and the Radwaste Processing Facility (RPF).

Waste gas decay tanks are batch released through the Unit 1 plant vent. The containment purges are released through their respective plant vents. Containment atmosphere is also released via the containment equipment hatch during periods when the equipment hatch is open with containment purge/vent being stopped. Approval was granted by the NRC to open the equipment hatch during fuel movement; a release permit is generated when the equipment hatch is opened and the containment exhaust fan is not discharging to the plant vent. Any detected activity in the containment equipment hatch permit is included in the Ground Release Table of the effluent report.

All of the paths with the exception of the RPF can be continuously monitored for gaseous radioactivity. The RPF is equipped with an integrated-type sample collection device for collecting particulates. Plant vent, containment, steam jet air ejector, steam-packing exhauster are equipped with an integrated-type sample collection device for collecting particulates and iodines. During this reporting period, there were no continuous radioactive releases through the condenser air ejector and the steam packing exhauster system vents. Batch Waste Gas Decay Tank releases are analyzed for noble gases before each release. The containment atmosphere is analyzed for noble gases prior to each release and for tritium at least on a monthly basis.

Sample analysis results and release flow rates form the basis for calculating released quantities of radionuclide specific radioactivity, dose rates associated with gaseous releases, and cumulative doses for the current quarter and year.

With each release period and batch release, radioactivity, dose rates, and cumulative doses are calculated. Cumulative dose results are tabulated, along with the percent of the ODCM limits for each release for the current quarter and year.

Typically achieved minimum detectable concentrations for gaseous effluent sample analyses are reported in Table 2-6.

2.2.2 Total Quantities of Radioactivity, Dose Rates, and Cumulative Doses

The methods for determining release quantities of radioactivity, dose rates, and cumulative doses are as follows:

2.2.2.1 Fission and Activation Gases

The released radioactivity is determined from sample analysis results collected as described above and average release flow rates over the period represented by the collected sample. Dose rates due to noble gases, radioiodines, tritium, and particulates are calculated. Calculated dose rates are compared to the dose rate limits specified in ODCM 3.1.2 for noble gases, radioiodines, tritium, and particulates. Dose rate calculation methodology is presented in the ODCM.

Beta and gamma air doses due to noble gases are calculated for the location in the unrestricted area with the potential for the highest exposure due to gaseous releases. Air doses are calculated for each release period and cumulative totals are kept for each unit for the calendar quarter and year. Cumulative air doses are compared with the dose limits specified in ODCM 3.1.3. Current percent of the ODCM limits are shown on the printout for each release period. Air dose calculation methodology is presented in the ODCM.

2.2.2.2 Radioiodines, Tritium and Particulate Releases

The released quantities of radioiodines, tritium and particulates are determined using the weekly samples and release flow rates for the two plant vent release points.

After each quarter, the particulate filters from each plant vent are combined, for strontium analysis. Strontium concentrations are input to the composite file of the computer to be used for release dose rate and individual dose calculations.

Doses to a Member of the Public due to radioiodines, tritium and particulates are calculated for the controlling receptor, which is described in Table 3-7of the ODCM. Doses are calculated for each release period, and cumulative totals are kept for each unit for the current calendar quarter and year. Cumulative doses are compared to the dose limits specified in ODCM 3.1.4.

Current percent of ODCM limits are shown in this report for each release period.

2.2.2.3 Gross Alpha Release

The gross alpha release is calculated each month by counting the particulate filters for each week for gross alpha activity. The four or five weeks' numbers are then recorded on a data sheet and the activity is summed at the end of the month. This concentration is used for release calculations.

2.2.3 Total Error Estimation

The total or maximum error associated with the effluent measurement will include the cumulative errors resulting from the total operation of sampling and measurement. Because it may be very difficult to assign error terms for each parameter affecting the final measurement, detailed statistical evaluation of error are not suggested. The objective should be to obtain an overall estimate of the error associated with measurements of radioactive materials released in liquid and gaseous effluents and solid waste.

Estimated errors are based on errors in counting equipment calibration, counting statistics, vent-flow rates, vent sample flow rates, non-steady release rates, chemical yield factors, and sample losses for such items as charcoal cartridges. Total Error is calculated by the root mean square method. The root mean square value is the square root of the arithmetic mean (average) of the squares of the original values.

a. Fission and activation total release was calculated from sample analysis results and release point flow rates.

Sampling and statistical error in counting	10%
Counting equipment calibration	10%
Vent flow Rates	10%
Non-steady release rates	20%
TOTAL ERROR	26.5%

b. I-131 releases were calculated from each weekly sample:

Statistical error in counting	10%
Counting equipment calibration	10%
Vent Flow Rates	10%
Vent Sample Flow Rates	50%
Non-Steady release rates	10%
Losses from charcoal cartridges	10%
TOTAL ERROR	55%

c. Particulates with half-lives greater than 8 day releases were calculated from sample and analysis results and release point flow rates.

Statistical error at MDC concentration	10%
Counting equipment calibration	10%
Vent flow rates	10%
Vent sample flow rates	50%
Non steady release rates	10%
TOTAL ERROR	54%

2.2.3 Total Error Estimation cont'd

d. Total tritium releases were calculated from sample analysis results and release point flow rates.

Water vapor in sample stream determination	10%
Vent flow rates	10%
Counting calibration and statistics	10%
Non-steady release rates	10%
TOTAL ERROR	20%

e. Gross Alpha radioactivity was calculated from sample analysis results and release point flow rates.

Statistical error at MDC concentration	10%
Counting equipment calibration	10%
Vent flow rates	10%
Vent sample flow rates	50%
Non Steady release rates	10%
TOTAL ERROR	55%

2.3 Gaseous Effluent Release Data

Regulatory Guide 1.21 Rev. 1 Tables 1A, 1B, and 1C are found in this report as Tables 2-1A, 2-1B, 2-1C, 2-2A, 2-2B, 2-2C, 2-3A, 2-3B, and 2-3C. Data are presented on a quarterly basis as required by Regulatory Guide 1.21 Rev. 1.

To complete table 2-1A, and 2-1B, the total release for each of the four categories (fission and activation gases, iodines, particulates, and tritium) was divided by the number of seconds in the quarter to obtain a release rate in μCi/second for each category. However, the percent of the ODCM limits are not applicable because VEGP has no curie limits for gaseous releases. Applicable limits are expressed in terms of dose. Noble gases are limited as specified in ODCM 3.1.2. The other three categories (tritium, radioiodines, and particulates) are limited as a group as specified in ODCM 3.1.2.

Dose rates due to noble gas releases and due to radioiodines, tritium, and particulate releases were calculated as part of the pre-release and post-release permits. No limits were exceeded for this reporting period.

Gross alpha radioactivity is reported in Table 2-1A and 2-1B as curies released in each quarter.

Limits for cumulative beta and gamma air doses due to noble gases are specified in ODCM 3.1.3. Cumulative air doses are presented in Table 2-4A, and 2-4B along with the percent of the ODCM limits.

Limits for cumulative doses to a Member of the Public due to radioiodines, tritium and particulates, are specified in ODCM 3.1.4. Cumulative doses to a Member of the Public are presented in Table 2-5A, and 2-5B along with percent of ODCM limits.

2.4 Radiological Impact Due to Gaseous Releases

Dose rates due to the release of noble gases were calculated for the site in accordance with ODCM 3.4.1.1. Dose rates due to radioiodines, tritium, and particulates in gaseous releases were calculated in accordance with ODCM 3.4.1.2.

Dose rates were calculated as part of pre-release and post release permits. No limits were exceeded for this reporting period.

Cumulative air doses due to noble gas releases were calculated for each unit in accordance with ODCM 3.4.2. These results are presented in Tables 2-4A and 2-4B.

Cumulative doses to a Member of the Public were calculated for each unit in accordance with ODCM 3.4.3. These results are presented in Tables 2-5A and 2-5B.

Dose rates and doses were calculated using the methodology presented in the Vogtle Electric Generating Plant Offsite Dose Calculation Manual.

2.5 Gaseous Effluents - Batch Releases

Other data pertinent to batch releases of radioactive gaseous effluent from Unit 1 and Unit 2 are listed in Table 2-7A and 2-7B.

2.6 Gaseous Effluents - Abnormal Releases

There were no abnormal releases for 2015.

Table 2-1 A

Vogtle Electric Generating Plant
RADIOACTIVE EFFLUENT RELEASE REPORT - 2015
Gaseous Effluents - Summation Of All Releases
Unit: 1
Starting: 1-Jan-2015 Ending: 31-Dec-2015

Type of Effluent	Units	1ST Quarter	2ND Quarter	3RD Quarter	4TH Quarter
A. Fission And Activation Gases					
1. Total Release	Curies	8.19E-02	9.36E-02	1.76E+00	2.10E-02
2. Average Release rate for period	µCi/sec	1.04E-02	1.19E-02	2.23E-01	2.67E-03
3. Percent of Applicable Limit	%	*	*	*	*
B. Radioiodines					
1. Total Iodine-131	Curies	0.00E+00	0.00E+00	0.00E+00	7.25E-06
2. Average Release rate for period	µCi/sec	0.00E+00	0.00E+00	0.00E+00	9.19E-07
3. Percent of Applicable Limit	%	*	*	*	*
C. Particulates					
1. Particulates (Half-Lives > 8 Days)	Curies	0.00E+00	0.00E+00	0.00E+00	0.00E+00
2. Average Release rate for period	µCi/sec	0.00E+00	0.00E+00	0.00E+00	0.000E+00
3. Percent of Applicable Limit	%	*	*	*	*
D. Tritium					
1. Total Release	Curies	7.59E+00	8.16E+00	7.35E+00	2.62E+00
2. Average Release rate for period	µCi/sec	9.63E-01	1.04E+01	9.33E-01	3.32E-01
3. Percent of Applicable Limit	%	*	*	*	*
E. Gross Alpha					
1. Total Release	Curies	0.00E+00	0.00E+00	0.00E+00	0.00E+00
2. Average Release rate for period	µCi/sec	0.00E+00	0.00E+00	0.00E+00	0.00E+00

* Applicable limits are expressed in terms of dose. See Tables 2-5A and 2-5B of this report.

Table 2-1 B

Vogtle Electric Generating Plant
RADIOACTIVE EFFLUENT RELEASE REPORT - 2015
Gaseous Effluents - Summation Of All Releases
Unit: 2
Starting: 1-Jan-2015 Ending: 31-Dec-2015

Type of Effluent	Units	1ST Quarter	2ND Quarter	3RD Quarter	4TH Quarter
A. Fission And Activation Gases					
1. Total Release	Curies	3.01E-02	2.89E-02	5.85E-02	8.89E-02
2. Average Release rate for period	µCi/sec	3.82E-03	3.66E-03	7.42E-03	1.13E-02
3. Percent of Applicable Limit	%	*	*	*	*
B. Radioiodines					
1. Total Iodine-131	Curies	0.00E+00	0.00E+00	0.00E+00	0.00E+00
2. Average Release rate for period	µCi/sec	0.00E+00	0.00E+00	0.00E+00	0.00E+00
3. Percent of Applicable Limit	%	*	*	*	*
C. Particulates					
1. Particulates (Half-Lives > 8 Days)	Curies	0.00E+00	0.00E+00	0.00E+00	0.00E+00
2. Average Release rate for period	µCi/sec	0.00E+00	0.00E+00	0.00E+00	0.00E+00
3. Percent of Applicable Limit	%	*	*	*	*
D. Tritium					
1. Total Release	Curies	5.59E+00	5.35E+00	1.17E+01	8.58E+00
2. Average Release rate for period	µCi/sec	7.09E-01	6.79E-01	1.48E+00	1.09E+00
3. Percent of Applicable Limit	%	*	*	*	*
E. Gross Alpha					
1. Total Release	Curies	0.00E+00	0.00E+00	0.00E+00	0.00E+00
2. Average Release rate for period	µCi/sec	0.00E+00	0.00E+00	0.00E+00	0.00E+00

. * Applicable limits are expressed in terms of dose. See Tables 2-5A and 2-5B of this report.

Table 2-1 C

Vogtle Electric Generating Plant
RADIOACTIVE EFFLUENT RELEASE REPORT - 2015
Gaseous Effluents - Summation Of All Releases
Unit: Site
Starting: 1-Jan-2015 Ending: 31-Dec-2015

Type of Effluent	Units	1ST Quarter	2ND Quarter	3RD Quarter	4TH Quarter
A. Fission And Activation Gases					
1. Total Release	Curies	1.12E-01	1.22E-01	1.82E+00	1.10E-01
2. Average Release rate for period	µCi/sec	1.42E-02	1.55E-02	2.31E-01	1.39E-02
3. Percent of Applicable Limit	%	*	*	*	*
B. Radioiodines					
1. Total Iodine-131	Curies	0.00E+00	0.00E+00	0.00E+00	7.25E-06
2. Average Release rate for period	µCi/sec	0.00E+00	0.00E+00	0.00E+00	9.19E-07
3. Percent of Applicable Limit	%	*	*	*	*
C. Particulates					
1. Particulates (Half-Lives > 8 Days)	Curies	0.00E+00	0.00E+00	0.00E+00	0.00E+00
2. Average Release rate for period	µCi/sec	0.00E+00	0.00E+00	0.00E+00	0.00E+00
3. Percent of Applicable Limit	%	*	*	*	*
D. Tritium					
1. Total Release	Curies	1.32E+01	1.35E+01	1.90E+01	1.12E+01
2. Average Release rate for period	µCi/sec	1.67E+00	1.71E+00	2.41E+00	1.42E+00
3. Percent of Applicable Limit	%	*	*	*	*
E. Gross Alpha					
1. Total Release	Curies	0.00E+00	0.00E+00	0.00E+00	0.00E+00
2. Average Release rate for period	µCi/sec	0.00E+00	0.00E+00	0.00E+00	0.00E+00

* Applicable limits are expressed in terms of dose. See Tables 2-5A and 2-5B of this report.

Table 2-2 A

Vogtle Electric Generating Plant
RADIOACTIVE EFFLUENT RELEASE REPORT - 2015
Gaseous Effluents - Mixed Mode Level Releases
Unit: 1
Starting: 1-Jan-2015 Ending: 31-Dec-2015

		Continuous Mode			
Nuclides Released	**Units**	**1ST Quarter**	**2ND Quarter**	**3RD Quarter**	**4TH Quarter**
Fission Gases					
Xe-135	Curies	0.00E+00	0.00E+00	0.00E+00	0.00E+00
Iodines					
No Nuclides Found	Curies	0.00E+00	0.00E+00	0.00E+00	0.00E+00
Particulates					
No Nuclides Found	Curies	0.00E+00	0.00E+00	0.00E+00	0.00E+00
Tritium					
H-3	Curies	7.57E+00	8.14E+00	5.09E+00	1.39E+00
Gross Alpha					
No Nuclides Found	Curies	0.00E+00	0.00E+00	0.00E+00	0.00E+00

Table 2-2 A

Vogtle Electric Generating Plant
RADIOACTIVE EFFLUENT RELEASE REPORT - 2015
Gaseous Effluents - Mixed Mode Level Releases
Unit: 1
Starting: 1-Jan-2015 Ending: 31-Dec-2015

		Batch Mode			
Nuclides Released	**Units**	**1ST Quarter**	**2ND Quarter**	**3RD Quarter**	**4TH Quarter**
Fission Gases					
Ar-41	Curies	8.19E-02	8.38E-02	1.75E+00	2.10E-02
Xe-133	Curies	0.00E+00	9.77E-03	0.00E+00	0.00E+00
Total For Period	**Curies**	**8.19E-02**	**9.36E-02**	**1.75E+00**	**2.10E-02**
Iodines					
No Nuclides Found	Curies	0.00E+00	0.00E+00	0.00E+00	0.00E+00
Particulates					
No Nuclides Found	Curies	0.00E+00	0.00E+00	0.00E+00	0.00E+00
Tritium					
H-3	Curies	1.80E-02	2.42E-02	2.21E+00	1.18E+00
Gross Alpha					
No Nuclides Found	Curies	0.00E+00	0.00E+00	0.00E+00	0.00E+00

Table 2-2 B

Vogtle Electric Generating Plant
RADIOACTIVE EFFLUENT RELEASE REPORT - 2015
Gaseous Effluents - Mixed Mode Level Releases
Unit: 2
Starting: 1-Jan-2015 Ending: 31-Dec-2015

Continuous Mode

Nuclides Released	Units	1ST Quarter	2ND Quarter	3RD Quarter	4TH Quarter
Fission Gases					
No Nuclides Found	Curies	0.00E+00	0.00E+00	0.00E+00	0.00E+00
Iodines					
No Nuclides Found	Curies	0.00E+00	0.00E+00	0.00E+00	0.00E+00
Particulates					
No Nuclides Found	Curies	0.00E+00	0.00E+00	0.00E+00	0.00E+00
Tritium					
H-3	Curies	5.58E+00	5.29E+00	1.16E+01	8.53E+00
Gross Alpha					
No Nuclides Found	Curies	0.00E+00	0.00E+00	0.00E+00	0.00E+00

Table 2-2 B

Vogtle Electric Generating Plant
RADIOACTIVE EFFLUENT RELEASE REPORT - 2015
Gaseous Effluents - Mixed Mode Level Releases
Unit: 2
Starting: 1-Jan-2015 Ending: 31-Dec-2015

		Batch Mode			
Nuclides Released	**Units**	**1ST Quarter**	**2ND Quarter**	**3RD Quarter**	**4TH Quarter**
Fission Gases					
Ar-41	Curies	1.80E-02	1.94E-02	2.49E-02	2.92E-02
Xe-133	Curies	1.19E-02	9.31E-03	3.33E-02	5.87E-02
Xe-135	Curies	2.30E-04	1.70E-04	2.43E-04	9.25E-04
Total For Period	**Curies**	**3.01E-02**	**2.89E-02**	**5.85E-02**	**8.89E-02**
Iodines					
No Nuclides Found	Curies	0.00E+00	0.00E+00	0.00E+00	0.00E+00
Particulates					
No Nuclides Found	Curies	0.00E+00	0.00E+00	0.00E+00	0.00E+00
Tritium					
H-3	Curies	1.36E-02	6.02E-02	4.29E-02	5.39E-02
Gross Alpha					
No Nuclides Found	Curies	0.00E+00	0.00E+00	0.00E+00	0.00E+00

Table 2-2 C

Vogtle Electric Generating Plant
RADIOACTIVE EFFLUENT RELEASE REPORT - 2015
Gaseous Effluents - Mixed Mode Level Releases
Unit: Site
Starting: 1-Jan-2015 Ending: 31-Dec-2015

		Continuous Mode			
Nuclides Released	**Units**	**1ST Quarter**	**2ND Quarter**	**3RD Quarter**	**4TH Quarter**
Fission Gases					
No Nuclides Found	Curies	0.00E+00	0.00E+00	0.00E+00	0.00E+00
Iodines					
No Nuclides Found	Curies	0.00E+00	0.00E+00	0.00E+00	0.00E+00
Particulates					
No Nuclides Found	Curies	0.00E+00	0.00E+00	0.00E+00	0.00E+00
Tritium					
H-3	Curies	1.31E+01	1.34E+01	1.67E+01	9.92E+00
Gross Alpha					
No Nuclides Found	Curies	0.00E+00	0.00E+00	0.00E+00	0.00E+00

Table 2-2 C

Vogtle Electric Generating Plant
RADIOACTIVE EFFLUENT RELEASE REPORT - 2015
Gaseous Effluents - Mixed Mode Level Releases
Unit: Site
Starting: 1-Jan-2015 Ending: 31-Dec-2015

		Batch Mode			
Nuclides Released	**Units**	**1ST Quarter**	**2ND Quarter**	**3RD Quarter**	**4TH Quarter**
Fission Gases					
Ar-41	Curies	9.99E-02	1.03E-01	1.78E+00	5.03E-02
Xe-133	Curies	1.19E-02	1.91E-02	3.33E-02	5.87E-02
Xe-135	Curies	2.30E-04	1.70E-04	2.43E-04	9.25E-04
Total For Period	**Curies**	**1.12E-01**	**1.22E-01**	**1.81E+00**	**1.10E-01**
Iodines					
No Nuclides Found	Curies	0.00E+00	0.00E+00	0.00E+00	0.00E+00
Particulates					
No Nuclides Found	Curies	0.00E+00	0.00E+00	0.00E+00	0.00E+00
Tritium					
H-3	Curies	3.16E-02	8.44E-02	2.26E+00	1.24E+00
Gross Alpha					
No Nuclides Found	Curies	0.00E+00	0.00E+00	0.00E+00	0.00E+00

Table 2-3 A

Vogtle Electric Generating Plant
RADIOACTIVE EFFLUENT RELEASE REPORT - 2015
Gaseous Effluents - Ground Level Releases
Unit: 1
Starting: 1-Jan-2015 Ending: 31-Dec-2015

		Continuous Mode			
Nuclides Released	**Units**	**1ST Quarter**	**2ND Quarter**	**3RD Quarter**	**4TH Quarter**
Fission Gases					
No Nuclides Found	Curies	0.00E+00	0.00E+00	0.00E+00	0.00E+00
Iodines					
No Nuclides Found	Curies	0.00E+00	0.00E+00	0.00E+00	0.00E+00
Particulates					
No Nuclides Found	Curies	0.00E+00	0.00E+00	0.00E+00	0.00E+00
Tritium					
No Nuclides Found	Curies	0.00E+00	0.00E+00	0.00E+00	0.00E+00
Gross Alpha					
No Nuclides Found	Curies	0.00E+00	0.00E+00	0.00E+00	0.00E+00

Table 2-3 A

Vogtle Electric Generating Plant
RADIOACTIVE EFFLUENT RELEASE REPORT - 2015
Gaseous Effluents - Ground Level Releases
Unit: 1
Starting: 1-Jan-2015 Ending: 31-Dec-2015

		Batch Mode			
Nuclides Released	**Units**	**1ST Quarter**	**2ND Quarter**	**3RD Quarter**	**4TH Quarter**
Fission Gases					
Ar-41	Curies	0.00E+00	0.00E+00	5.81E-03	0.00E+00
Total For Period	**Curies**	**0.00E+00**	**0.00E+00**	**5.81E-03**	**0.00E+00**
Iodines					
I-131	Curies	0.00E+00	0.00E+00	0.00E+00	7.25E-06
Total For Period	**Curies**	**0.00E+00**	**0.00E+00**	**0.00E+00**	**7.25E-06**
Particulates					
No Nuclides Found	Curies	0.00E+00	0.00E+00	0.00E+00	0.00E+00
Tritium					
H-3	Curies	0.00E+00	0.00E+00	5.09E-02	4.31E-02
Gross Alpha					
No Nuclides Found	Curies	0.00E+00	0.00E+00	0.00E+00	0.00E+00

Table 2-3 B

Vogtle Electric Generating Plant
RADIOACTIVE EFFLUENT RELEASE REPORT - 2015
Gaseous Effluents - Ground Level Releases
Unit: 2
Starting: 1-Jan-2015 Ending: 31-Dec-2015

		Continuous Mode			
Nuclides Released	**Units**	**1ST Quarter**	**2ND Quarter**	**3RD Quarter**	**4TH Quarter**
Fission Gases					
No Nuclides Found	Curies	0.00E+00	0.00E+00	0.00E+00	0.00E+00
Iodines					
No Nuclides Found	Curies	0.00E+00	0.00E+00	0.00E+00	0.00E+00
Particulates					
No Nuclides Found	Curies	0.00E+00	0.00E+00	0.00E+00	0.00E+00
Tritium					
No Nuclides Found	Curies	0.00E+00	0.00E+00	0.00E+00	0.00E+00
Gross Alpha					
No Nuclides Found	Curies	0.00E+00	0.00E+00	0.00E+00	0.00E+00

Table 2-3 B

Vogtle Electric Generating Plant
RADIOACTIVE EFFLUENT RELEASE REPORT - 2015
Gaseous Effluents - Ground Level Releases
Unit: 2
Starting: 1-Jan-2015 Ending: 31-Dec-2015

		Batch Mode			
Nuclides Released	**Units**	**1ST Quarter**	**2ND Quarter**	**3RD Quarter**	**4TH Quarter**
Fission Gases					
No Nuclides Found	Curies	0.00E+00	0.00E+00	0.00E+00	0.00E+00
Iodines					
No Nuclides Found	Curies	0.00E+00	0.00E+00	0.00E+00	0.00E+00
Particulates					
No Nuclides Found	Curies	0.00E+00	0.00E+00	0.00E+00	0.00E+00
Tritium					
H-3	Curies	0.00E+00	0.00E+00	0.00E+00	0.00E+00
Gross Alpha					
No Nuclides Found	Curies	0.00E+00	0.00E+00	0.00E+00	0.00E+00

Table 2-3 C

Vogtle Electric Generating Plant
RADIOACTIVE EFFLUENT RELEASE REPORT - 2015
Gaseous Effluents - Ground Level Releases
Unit: Site
Starting: 1-Jan-2015 Ending: 31-Dec-2015

		Continuous Mode			
Nuclides Released	**Units**	**1ST Quarter**	**2ND Quarter**	**3RD Quarter**	**4TH Quarter**
Fission Gases					
No Nuclides Found	Curies	0.00E+00	0.00E+00	0.00E+00	0.00E+00
Iodines					
No Nuclides Found	Curies	0.00E+00	0.00E+00	0.00E+00	0.00E+00
Particulates					
No Nuclides Found	Curies	0.00E+00	0.00E+00	0.00E+00	0.00E+00
Tritium					
No Nuclides Found	Curies	0.00E+00	0.00E+00	0.00E+00	0.00E+00
Gross Alpha					
No Nuclides Found	Curies	0.00E+00	0.00E+00	0.00E+00	0.00E+00

Table 2-3 C

Vogtle Electric Generating Plant
RADIOACTIVE EFFLUENT RELEASE REPORT - 2015
Gaseous Effluents - Ground Level Releases
Unit: Site
Starting: 1-Jan-2015 Ending: 31-Dec-2015

		Batch Mode			
Nuclides Released	**Units**	**1ST Quarter**	**2ND Quarter**	**3RD Quarter**	**4TH Quarter**
Fission Gases					
Ar-41	Curies	0.00E+00	0.00E+00	5.81E-03	0.00E+00
Total For Period	**Curies**	**0.00E+00**	**0.00E+00**	**5.81E-03**	**0.00E+00**
Iodines					
I-131	Curies	0.00E+00	0.00E+00	0.00E+00	7.25E-06
Total For Period	**Curies**	**0.00E+00**	**0.00E+00**	**0.00E+00**	**7.25E-06**
Particulates					
No Nuclides Found	Curies	0.00E+00	0.00E+00	0.00E+00	0.00E+00
Tritium					
H-3	Curies	0.00E+00	0.00E+00	5.09E-02	4.31E-02
Gross Alpha					
No Nuclides Found	Curies	0.00E+00	0.00E+00	0.00E+00	0.00E+00

Table 2-4 A

Vogtle Electric Generating Plant
RADIOACTIVE EFFLUENT RELEASE REPORT - 2015
Air Doses Due to Gaseous Releases
Unit: 1
Starting: 1-Jan-2015 Ending: 31-Dec-2015

Cumulative Doses Per Quarter

Type of Radiation	ODCM Lmt	Units	1ST Qtr	% ODCM	2ND Qtr	% ODCM	3RD Qtr	% ODCM	4TH Qtr	% ODCM
Gamma Air	5.00E+00	mRad	1.12E-05	2.23E-04	1.15E-05	2.29E-04	2.43E-04	4.87E-03	2.87E-06	5.74E-05
Beta Air	1.00E+01	mRad	3.93E-06	3.93E-05	4.18E-06	4.18E-05	8.58E-05	8.58E-04	1.01E-06	1.01E-05

Cumulative Doses Per Year

Type of Radiation	ODCM Lmt	Units	Year to End Date	% ODCM	Receptor	Limit
Gamma Air	1.00E+01	mRad	2.69E-04	2.69E-03	Site Boundary / Child	Air Dose Gamma Annual 1.21
Beta Air	2.00E+01	mRad	9.49E-05	4.75E-04	Site Boundary / Child	Air Dose Beta Annual 1.21

Table 2-4 B

Vogtle Electric Generating Plant
RADIOACTIVE EFFLUENT RELEASE REPORT - 2015
Air Doses Due to Gaseous Releases
Unit: 2
Starting: 1-Jan-2015 Ending: 31-Dec-2015

Cumulative Doses Per Quarter

Type of Radiation	ODCM Lmt	Units	1ST Qtr	% ODCM	2ND Qtr	% ODCM	3RD Qtr	% ODCM	4TH Qtr	% ODCM
Gamma Air	5.00E+00	mRad	2.52E-06	5.04E-05	2.69E-06	5.39E-05	3.57E-06	7.15E-05	4.31E-06	8.62E-05
Beta Air	1.00E+01	mRad	1.06E-06	1.06E-05	1.08E-06	1.08E-05	1.72E-06	1.72E-05	2.34E-06	2.34E-05

Cumulative Doses Per Year

Type of Radiation	ODCM Lmt	Units	Year to End Date	% ODCM	Receptor	Limit
Gamma Air	1.00E+01	mRad	1.31E-05	1.31E-04	Site Boundary / Child	Air Dose Gamma Annual 1.21
Beta Air	2.00E+01	mRad	6.20E-06	3.10E-05	Site Boundary / Child	Air Dose Beta Annual 1.21

Table 2-4 C

Vogtle Electric Generating Plant
RADIOACTIVE EFFLUENT RELEASE REPORT - 2015
Gaseous Effluents - Ground Level Releases
Unit: Site
Starting: 1-Jan-2015 Ending: 31-Dec-2015

Cumulative Doses Per Quarter

Type of Radiation	ODCM Lmt	Units	1ST Qtr	% ODCM	2ND Qtr	% ODCM	3RD Qtr	% ODCM	4TH Qtr	% ODCM
Gamma Air	5.00E+00	mRad	1.37E-05	2.73E-04	1.42E-05	2.83E-04	2.47E-04	4.94E-03	7.18E-06	1.44E-04
Beta Air	1.00E+01	mRad	4.99E-06	4.99E-05	5.26E-06	5.26E-05	8.75E-05	8.75E-04	3.35E-06	3.35E-05

Cumulative Doses Per Year

Type of Radiation	ODCM Lmt	Units	Year to End Date	% ODCM	Receptor	Limit
Gamma Air	1.00E+01	mRad	2.82E-04	2.82E-03	Site Boundary / Child	Air Dose Gamma Annual 1.21
Beta Air	2.00E+01	mRad	1.01E-04	5.06E-04	Site Boundary / Child	Air Dose Beta Annual 1.21

Table 2-5 A

Vogtle Electric Generating Plant
RADIOACTIVE EFFLUENT RELEASE REPORT - 2015
Doses To A Member Of The Public Due To Radioiodines, Tritium, and Particulates in Gaseous Releases
Unit: 1
Starting: 1-Jan-2015 Ending: 31-Dec-2015

Cumulative Doses Per Quarter

Organ	ODCM Lmt	Units	1ST Qtr	% ODCM	2ND Qtr	% ODCM	3RD Qtr	% ODCM	4TH Qtr	% ODCM
Total Body	7.50E+00	mRem	1.64E-04	2.19E-03	1.76E-04	2.35E-03	1.63E-04	2.18E-03	6.03E-05	8.04E-04
Lung	7.50E+00	mRem	1.64E-04	2.19E-03	1.76E-04	2.35E-03	1.63E-04	2.18E-03	6.02E-05	8.03E-04
Thyroid	7.50E+00	mRem	1.64E-04	2.19E-03	1.76E-04	2.35E-03	1.63E-04	2.18E-03	9.66E-05	1.29E-03
Kidney	7.50E+00	mRem	1.64E-04	2.19E-03	1.76E-04	2.35E-03	1.63E-04	2.18E-03	6.04E-05	8.05E-04
Gi-Lli	7.50E+00	mRem	1.64E-04	2.19E-03	1.76E-04	2.35E-03	1.63E-04	2.18E-03	6.02E-05	8.03E-04
Bone	7.50E+00	mRem	0.00E+00	0.00E+00	0.00E+00	0.00E+00	0.00E+00	0.00E+00	1.21E-07	1.61E-06
Liver	7.50E+00	mRem	1.64E-04	2.19E-03	1.76E-04	2.35E-03	1.63E-04	2.18E-03	6.03E-05	8.04E-04

Cumulative Doses per Year

Organ	ODCM Lmt	Units	Year to Ending Date	% ODCM	Receptor Limit	
Thyroid	1.500E+01	mRem	6.005E-04	4.003E-03	Maximum Individual / Child	Iodine/Part Dose Annual 1.21
Kidney	1.500E+01	mRem	5.642E-04	3.761E-03	Maximum Individual / Child	Iodine/Part Dose Annual 1.21
Liver	1.500E+01	mRem	5.641E-04	3.761E-03	Maximum Individual / Child	Iodine/Part Dose Annual 1.21
Bone	1.500E+01	mRem	1.206E-07	8.039E-07	Maximum Individual / Child	Iodine/Part Dose Annual 1.21
Total Body	1.500E+01	mRem	5.641E-04	3.761E-03	Maximum Individual / Child	Iodine/Part Dose Annual 1.21
Lung	1.500E+01	mRem	5.640E-04	3.760E-03	Maximum Individual / Child	Iodine/Part Dose Annual 1.21
Gi-Lli	1.500E+01	mRem	5.640E-04	3.760E-03	Maximum Individual / Child	Iodine/Part Dose Annual 1.21

Table 2-5 B

Vogtle Electric Generating Plant
RADIOACTIVE EFFLUENT RELEASE REPORT - 2015
Doses To A Member Of The Public Due To Radioiodines, Tritium, and Particulates in Gaseous Releases
Unit: 2
Starting: 1-Jan-2015 Ending: 31-Dec-2015

Cumulative Doses Per Quarter

Organ	ODCM Lmt	Units	1ST Qtr	% ODCM	2ND Qtr	% ODCM	3RD Qtr	% ODCM	4TH Qtr	% ODCM
Lung	7.50E+00	mRem	1.21E-04	1.61E-03	1.16E-04	1.54E-03	2.52E-04	3.36E-03	1.85E-04	2.47E-03
Total Body	7.50E+00	mRem	1.21E-04	1.61E-03	1.16E-04	1.54E-03	2.52E-04	3.36E-03	1.85E-04	2.47E-03
Thyroid	7.50E+00	mRem	1.21E-04	1.61E-03	1.16E-04	1.54E-03	2.52E-04	3.36E-03	1.85E-04	2.47E-03
Liver	7.50E+00	mRem	1.21E-04	1.61E-03	1.16E-04	1.54E-03	2.52E-04	3.36E-03	1.85E-04	2.47E-03
Gi-Lli	7.50E+00	mRem	1.21E-04	1.61E-03	1.16E-04	1.54E-03	2.52E-04	3.36E-03	1.85E-04	2.47E-03
Kidney	7.50E+00	mRem	1.21E-04	1.61E-03	1.16E-04	1.54E-03	2.52E-04	3.36E-03	1.85E-04	2.47E-03

Cumulative Doses per Year

Organ	ODCM Lmt	Units	Year to Ending Date	% ODCM	Receptor	Limit
Liver	1.500E+01	mRem	6.741E-04	4.494E-03	Maximum Individual / Child	Iodine/Part Dose Annual 1.21
Lung	1.500E+01	mRem	6.741E-04	4.494E-03	Maximum Individual / Child	Iodine/Part Dose Annual 1.21
Thyroid	1.500E+01	mRem	6.741E-04	4.494E-03	Maximum Individual / Child	Iodine/Part Dose Annual 1.21
Kidney	1.500E+01	mRem	6.741E-04	4.494E-03	Maximum Individual / Child	Iodine/Part Dose Annual 1.21
Total Body	1.500E+01	mRem	6.741E-04	4.494E-03	Maximum Individual / Child	Iodine/Part Dose Annual 1.21
Gi-Lli	1.500E+01	mRem	6.741E-04	4.494E-03	Maximum Individual / Child	Iodine/Part Dose Annual 1.21

Table 2-5 C

Vogtle Electric Generating Plant
RADIOACTIVE EFFLUENT RELEASE REPORT - 2015
Doses To A Member Of The Public Due To Radioiodines, Tritium, and Particulates in Gaseous Releases
Unit: Site
Starting: 1-Jan-2015 Ending: 31-Dec-2015

Cumulative Doses Per Quarter

Organ	ODCM Lmt	Units	1ST Qtr	% ODCM	2ND Qtr	% ODCM	3RD Qtr	% ODCM	4TH Qtr	% ODCM
Bone	7.50E+00	mRem	0.00E+00	0.00E+00	0.00E+00	0.00E+00	0.00E+00	0.00E+00	1.21E-07	1.61E-06
Total Body	7.50E+00	mRem	2.85E-04	3.80E-03	2.92E-04	3.89E-03	4.15E-04	5.54E-03	2.46E-04	3.28E-03
Kidney	7.50E+00	mRem	2.85E-04	3.80E-03	2.92E-04	3.89E-03	4.15E-04	5.54E-03	2.46E-04	3.28E-03
Thyroid	7.50E+00	mRem	2.85E-04	3.80E-03	2.92E-04	3.89E-03	4.15E-04	5.54E-03	2.82E-04	3.76E-03
Lung	7.50E+00	mRem	2.85E-04	3.80E-03	2.92E-04	3.89E-03	4.15E-04	5.54E-03	2.46E-04	3.28E-03
Liver	7.50E+00	mRem	2.85E-04	3.80E-03	2.92E-04	3.89E-03	4.15E-04	5.54E-03	2.46E-04	3.28E-03
Gi-Lli	7.50E+00	mRem	2.85E-04	3.80E-03	2.92E-04	3.89E-03	4.15E-04	5.54E-03	2.46E-04	3.28E-03

Cumulative Doses per Year

Organ	ODCM Lmt	Units	Year to Ending Date	% ODCM	Receptor	Limit
Liver	1.500E+01	mRem	1.238E-03	8.255E-03	Maximum Individual / Child	Iodine/Part Dose Annual 1.21
Kidney	1.500E+01	mRem	1.238E-03	8.255E-03	Maximum Individual / Child	Iodine/Part Dose Annual 1.21
Gi-Lli	1.500E+01	mRem	1.238E-03	8.254E-03	Maximum Individual / Child	Iodine/Part Dose Annual 1.21
Bone	1.500E+01	mRem	1.206E-07	8.039E-07	Maximum Individual / Child	Iodine/Part Dose Annual 1.21
Lung	1.500E+01	mRem	1.238E-03	8.254E-03	Maximum Individual / Child	Iodine/Part Dose Annual 1.21
Thyroid	1.500E+01	mRem	1.275E-03	8.497E-03	Maximum Individual / Child	Iodine/Part Dose Annual 1.21
Total Body	1.500E+01	mRem	1.238E-03	8.255E-03	Maximum Individual / Child	Iodine/Part Dose Annual 1.21

Table 2-6

Vogtle Electric Generating Plant

RADIOACTIVE EFFLUENT RELEASE REPORT – 2015

MINIMUM DETECTABLE CONCENTRATIONS
GASEOUS SAMPLE ANALYSES

Starting: 1-Jan-2015 Ending: 31-Dec-2015

RADIONUCLIDE	MDC	UNITS
Kr-87	1.82E-08	µCi/ml
Kr-88	2.53E-08	µCi/ml
Xe-133	2.05E-08	µCi/ml
Xe-133m	8.63E-08	µCi/ml
Xe-135	7.12E-08	µCi/ml
Xe-138	1.05E-07	µCi/ml
I-131	7.93E-15*	µCi/ml
Mn-54	3.94E-14*	µCi/ml
Fe-59	2.45E-14*	µCi/ml
Co-58	1.39E-14*	µCi/ml
Co-60	1.75E-14*	µCi/ml
Zn-65	2.82E-14*	µCi/ml
Mo-99	9.57E-14*	µCi/ml
Cs-134	1.12E-14*	µCi/ml
Cs-137	8.71E-15*	µCi/ml
Ce-141	8.62E-15*	µCi/ml
Ce-144	2.77E-14*	µCi/ml
Sr-89	1.00E-13	µCi/ml
Sr-90	1.00E-13	µCi/ml
H-3	9.00E-08	µCi/ml
Gross Alpha	1.00E-13	µCi/ml

* Based on an estimated sample volume of 5.7E+08 mls for particulate filters and charcoal cartridges

Table 2-7 A

Vogtle Electric Generating Plant
RADIOACTIVE EFFLUENT RELEASE REPORT - 2015
Gaseous Effluents - Batch Release Summary
Unit: 1
Starting: 1-Jan-2015 Ending: 31-Dec-2015

Gaseous Releases	Units	1ST Quarter	2ND Quarter	3RD Quarter	4TH Quarter	Year Totals
1. Number of batch releases		52	55	61	46	214
2. Total time period for batch releases	(Minutes)	3.10E+03	5.49E+03	1.98E+04	2.40E+04	5.24E+04
3. Maximum time period for a batch release	(Minutes)	1.40E+02	2.16E+03	5.04E+03	4.65E+03	5.04E+03
4. Average time period for a batch release	(Minutes)	5.97E+01	9.98E+01	3.25E+02	5.21E+02	2.45E+02
5. Minimum time period for a batch release	(Minutes)	3.10E+01	2.20E+01	2.10E+01	1.60E+01	1.60E+01

Table 2-7 B

Vogtle Electric Generating Plant
RADIOACTIVE EFFLUENT RELEASE REPORT - 2015
Gaseous Effluents - Batch Release Summary
Unit: 2
Starting: 1-Jan-2015 Ending: 31-Dec-2015

Gaseous Releases	Units	1ST Quarter	2ND Quarter	3RD Quarter	4TH Quarter	Year Totals
1. Number of batch releases		15	17	19	20	71
2. Total time period for batch releases	(Minutes)	7.21E+02	7.62E+02	7.12E+02	1.10E+03	3.29E+03
3. Maximum time period for a batch release	(Minutes)	7.90E+01	7.00E+01	5.90E+01	2.77E+02	2.77E+02
4. Average time period for a batch release	(Minutes)	4.81E+01	4.48E+01	3.75E+01	5.50E+01	4.64E+01
5. Minimum time period for a batch release	(Minutes)	3.30E+01	2.60E+01	6.00E+00	7.00E+00	6.00E+00

Table 2-7 C

Vogtle Electric Generating Plant
RADIOACTIVE EFFLUENT RELEASE REPORT - 2015
Gaseous Effluents - Batch Release Summary
Unit: Site
Starting: 1-Jan-2015 Ending: 31-Dec-2015

Gaseous Releases	Units	1ST Quarter	2ND Quarter	3RD Quarter	4TH Quarter	Year Totals
1. Number of batch releases		67	72	80	66	285
2. Total time period for batch releases	(Minutes)	3.82E+03	6.25E+03	2.05E+04	2.51E+04	5.57E+04
3. Maximum time period for a batch release	(Minutes)	1.40E+02	2.16E+03	5.04E+03	4.65E+03	5.04E+03
4. Average time period for a batch release	(Minutes)	5.71E+01	8.68E+01	2.57E+02	3.80E+02	1.95E+02
5. Minimum time period for a batch release	(Minutes)	3.10E+01	2.20E+01	6.00E+00	7.00E+00	6.00E+00

Table 2-8 A

Vogtle Electric Generating Plant
RADIOACTIVE EFFLUENT RELEASE REPORT - 2015
Gaseous Effluents - Abnormal Release Summary
Unit: 1
Starting: 1-Jan-2015 Ending: 31-Dec-2015

Gaseous Releases	Units	1ST Quarter	2ND Quarter	3RD Quarter	4TH Quarter	Year Totals
1. Number of Releases		0	0	0	0	0
2. Total Time For All Releases	(Minutes)	0.00E+00	0.00E+00	0.00E+00	0.00E+00	0.00E+00
3. Maximum Time For A Release	(Minutes)	0.00E+00	0.00E+00	0.00E+00	0.00E+00	0.00E+00
4. Average Time For A Release	(Minutes)	0.00E+00	0.00E+00	0.00E+00	0.00E+00	0.00E+00
5. Minimum Time For A Release	(Minutes)	0.00E+00	0.00E+00	0.00E+00	0.00E+00	0.00E+00
6. Total activity for all releases	(Curies)	0.00E+00	0.00E+00	0.00E+00	0.00E+00	0.00E+00

Table 2-8 B

Vogtle Electric Generating Plant
RADIOACTIVE EFFLUENT RELEASE REPORT - 2015
Gaseous Effluents - Abnormal Release Summary
Unit: 2
Starting: 1-Jan-2015 Ending: 31-Dec-2015

Gaseous Releases	Units	1ST Quarter	2ND Quarter	3RD Quarter	4TH Quarter	Year Totals
1. Number of Releases		0	0	0	0	0
2. Total Time For All Releases	(Minutes)	0.00E+00	0.00E+00	0.00E+00	0.00E+00	0.00E+00
3. Maximum Time For A Release	(Minutes)	0.00E+00	0.00E+00	0.00E+00	0.00E+00	0.00E+00
4. Average Time For A Release	(Minutes)	0.00E+00	0.00E+00	0.00E+00	0.00E+00	0.00E+00
5. Minimum Time For A Release	(Minutes)	0.00E+00	0.00E+00	0.00E+00	0.00E+00	0.00E+00
6. Total activity for all releases	(Curies)	0.00E+00	0.00E+00	0.00E+00	0.00E+00	0.00E+00

Table 2-8 C

Vogtle Electric Generating Plant
RADIOACTIVE EFFLUENT RELEASE REPORT - 2015
Gaseous Effluents - Abnormal Release Summary
Unit: Site
Starting: 1-Jan-2015 Ending: 31-Dec-2015

Gaseous Releases	Units	1ST Quarter	2ND Quarter	3RD Quarter	4TH Quarter	Year Totals
1. Number of Releases		0	0	0	0	0
2. Total Time For All Releases	(Minutes)	0.00E+00	0.00E+00	0.00E+00	0.00E+00	0.00E+00
3. Maximum Time For A Release	(Minutes)	0.00E+00	0.00E+00	0.00E+00	0.00E+00	0.00E+00
4. Average Time For A Release	(Minutes)	0.00E+00	0.00E+00	0.00E+00	0.00E+00	0.00E+00
5. Minimum Time For A Release	(Minutes)	0.00E+00	0.00E+00	0.00E+00	0.00E+00	0.00E+00
6. Total activity for all releases	(Curies)	0.00E+00	0.00E+00	0.00E+00	0.00E+00	0.00E+00

3.0 Solid Waste

3.1 Regulatory Requirements

The ODCM requirements presented in this section are stated in part for Unit 1 and Unit 2.

3.1.1 Solid Radioactive Waste System

10.2.1 Process Control Program (PCP)

Radioactive wastes shall be solidified or dewatered in accordance with the PCP to meet shipping and transportation requirements during transit and disposal site requirements when received at the disposal site.

3.1.2 Reporting Requirements

12.1 PCP states in part:

The Radioactive Effluent Release Report, submitted in accordance with Technical Specification 5.6.3, shall include a summary of the quantities of solid radwaste released from the units, as outlined in Regulatory Guide 1.21 Rev 2.

3.2 Solid Waste Data

Regulatory Guide 1.21 Rev 2, Table 3 is found in this report as Table 3-1. GEL Laboratories performs hard-to-detect analysis for solid waste. Final calculations for nuclides include sample analysis performed on resin from High Integrity Containers. For Gaseous and Liquid composites, the Georgia Power Environmental Laboratory performs hard-to-detect analysis.

Table 3-1
Vogtle Electric Generating Plant
RADIOACTIVE EFFLUENT AND WASTE DISPOSAL REPORT - 2015
SOLID WASTE AND IRRADIATED FUEL SHIPMENTS

JANUARY 1, 2015 THROUGH JUNE 30, 2015

Regulatory Guide 1.21: Effluent and Waste Disposal Semi-Annual Report of Solid Waste and Irradiated Fuel Shipments

A. SOLID WASTE SHIPPED OFFSITE FOR BURIAL OR DISPOSAL (Not irradiated fuel)

1. Type of waste – **NRC Waste Class A**	UNIT	6 month Period	Est. Total ERROR %
a. Spent resins, filter sludges, evaporator bottoms, etc.	m^3	3.11E+00	+/- 10
	Ci	2.36E+01	+/- 10
b. Dry compressible waste, contaminated equip. etc.	m^3	1.77E+02	+/- 25
	Ci	2.49E-02	+/- 25
c. Irradiated components, control rods,	m^3	-N/A-	-N/A-
	Ci	-N/A-	-N/A-
d. Control Rod Drive Filters	m^3	-N/A-	-N/A-
	Ci	-N/A-	-N/A-
e. Other (describe) Steam Generator Blowdown Resin (GIC)	m^3	3.48E+01	+/- 25
	Ci	9.66E-03	+/- 25

1. Type of waste – **NRC Waste Class B**	UNIT	6 month period	Est. Total ERROR %
a. Spent resins, filter sludges, evaporator bottoms, etc.	m^3	8.97E+00	+/- 10
	Ci	4.60E+01	+/- 10
b. Dry compressible waste, contaminated equip. etc.	m^3	-N/A-	-N/A-
	Ci	-N/A-	-N/A-
c. Irradiated components, control rods,	m^3	-N/A-	-N/A-
	Ci	-N/A-	-N/A-
d. Control Rod Drive Filters	m^3	-N/A-	-N/A-
	Ci	-N/A-	-N/A-
e. Other (describe) equip. etc.	m^3	-N/A-	-N/A-
	Ci	-N/A-	-N/A-

2. ESTIMATE OF MAJOR NUCLIDE COMPOSITION:

NRC WASTE CLASS A

	ISOTOPE	PERCENT	CURIES
a.	^{3}H	0.11	2.57E-02
	^{14}C	1.77	4.16E-01
	^{54}Mn	0.14	3.35E-02
	^{55}Fe	34.51	8.13E+00
	^{60}Co	22.65	5.34E+00
	^{59}Ni	0.18	4.29E-02
	^{63}Ni	40.31	9.50E+00
	^{137}Cs	0.23	5.47E-02
b.	^{3}H	3.28	8.54E-04
	^{14}C	0.46	1.21E-04
	^{54}Mn	0.53	1.39E-04
	^{55}Fe	19.39	5.04E-03
	^{58}Co	3.53	9.20E-04
	^{60}Co	35.80	9.31E-03
	^{63}Ni	35.15	9.14E-03
	^{95}Zr	0.27	6.91E-05
	^{95}Nb	0.36	9.36E-05
	^{99}Tc	0.63	1.63E-04
	^{137}Cs	0.53	1.37E-04
c.	-N/A-	-N/A-	-N/A-
d.	-N/A-	-N/A-	-N/A-
e.	^{3}H	3.27	3.31E-04
	^{14}C	0.46	4.68E-05
	^{54}Mn	0.53	5.38E-05
	^{55}Fe	19.27	1.95E-03
	^{58}Co	3.83	3.87E-04
	^{60}Co	35.64	3.60E-03
	^{63}Ni	35.05	3.54E-03
	^{95}Zr	0.29	2.95E-05
	^{95}Nb	0.43	4.32E-05
	^{99}Tc	0.62	6.30E-05
	^{137}Cs	0.52	5.29E-05

2. ESTIMATE OF MAJOR NUCLIDE COMPOSITION:

NRC WASTE CLASS B

	ISOTOPE	PERCENT	CURIES
a.	^{3}H	0.25	1.14E-01
	^{54}Mn	0.22	1.02E-01
	^{55}Fe	4.96	2.28E+00
	^{60}Co	10.67	4.92E+00
	^{59}Ni	0.48	2.22E-01
	^{63}Ni	78.75	3.63E+01
	^{90}Sr	0.15	6.76E-02
	^{125}Sb	0.28	1.29E-01
	^{134}Cs	0.44	2.01E-01
	^{137}Cs	3.64	1.68E+00
b.	-N/A-	-N/A-	-N/A-
c.	-N/A-	-N/A-	-N/A-
d.	-N/A-	-N/A-	-N/A-
e.	-N/A-	-N/A-	-N/A-

3. Solid Waste Disposition

Number of Shipments	Mode of Transportation	Destination
7	Hittman Transport	Energy Solutions – Bear Creek
2	Land Star Transport	Energy Solutions – Gallaher Rd

B. IRRADIATED FUEL SHIPMENTS (Disposition)

Number of Shipments	Mode of Transportation	Destination
None	N/A	N/A

Table 3-1
Vogtle Electric Generating Plant
RADIOACTIVE EFFLUENT AND WASTE DISPOSAL REPORT - 2015
SOLID WASTE AND IRRADIATED FUEL SHIPMENTS

JULY 1, 2015 THROUGH DECEMBER 31, 2015

Regulatory Guide 1.21: Effluent and Waste Disposal Semi-Annual Report of Solid Waste and Irradiated Fuel Shipments

A. SOLID WASTE SHIPPED OFFSITE FOR BURIAL OR DISPOSAL (Not irradiated fuel)

1. Type of waste – **NRC Waste Class A**	UNIT	6 month Period	Est. Total ERROR %
e. Spent resins, filter sludges, evaporator bottoms, etc.	m^3	2.15E+01	+/- 10
	Ci	5.15E+01	+/- 10
f. Dry compressible waste, contaminated equip. etc.	m^3	3.92E+02	+/- 25
	Ci	1.14E+00	+/- 25
g. Irradiated components, control rods,	m^3	-N/A-	-N/A-
	Ci	-N/A-	-N/A-
h. Control Rod Drive Filters	m^3	-N/A-	-N/A-
	Ci	-N/A-	-N/A-
e. Other (describe) Steam Generator Blowdown Resin (GIC)	m^3	3.97E+01	+/- 25
	Ci	1.23E-02	+/- 25

1. Type of waste – **NRC Waste Class B**	UNIT	6 month period	Est. Total ERROR %
e. Spent resins, filter sludges, evaporator bottoms, etc.	m^3	5.78E+00	+/- 10
	Ci	2.65E+01	+/- 10
f. Dry compressible waste, contaminated equip. etc.	m^3	-N/A-	-N/A-
	Ci	-N/A-	-N/A-
g. Irradiated components, control rods,	m^3	-N/A-	-N/A-
	Ci	-N/A-	-N/A-
h. Control Rod Drive Filters	m^3	-N/A-	-N/A-
	Ci	-N/A-	-N/A-
e. Other (describe) equip. etc.	m^3	-N/A-	-N/A-
	Ci	-N/A-	-N/A-

2. ESTIMATE OF MAJOR NUCLIDE COMPOSITION:

NRC WASTE CLASS A

	ISOTOPE	PERCENT	CURIES
a.	^{3}H	1.66	8.55E-01
	^{14}C	1.92	9.87E-01
	^{54}Mn	1.17	6.01E-01
	^{55}Fe	15.62	8.05E+00
	^{57}Co	0.16	8.17E-02
	^{58}Co	2.52	1.30E+00
	^{60}Co	27.60	1.42E+01
	^{59}Ni	0.20	1.05E-01
	^{63}Ni	43.66	2.25E+01
	^{65}Zn	0.29	1.50E-01
	^{89}Sr	0.19	9.98E-02
	^{125}Sb	0.54	2.81E-01
	^{134}Cs	0.35	1.81E-01
	^{137}Cs	3.94	2.03E+00
b.	^{3}H	2.98	3.53E-02
	^{14}C	0.42	5.00E-03
	^{51}Cr	0.66	7.85E-03
	^{54}Mn	0.69	8.14E-03
	^{55}Fe	18.70	2.22E-01
	^{58}Co	8.10	9.61E-02
	^{60}Co	33.80	4.01E-01
	^{63}Ni	31.21	3.70E-01
	^{95}Zr	0.73	8.61E-03
	^{95}Nb	1.32	1.57E-02
	^{99}Tc	0.57	6.82E-03
	^{137}Cs	0.55	6.49E-03
c.	-N/A-	-N/A-	-N/A-
d.	-N/A-	-N/A-	-N/A-
e.	^{3}H	3.34	4.42E-04
	^{14}C	0.50	6.42E-05
	^{54}Mn	0.44	5.63E-05
	^{55}Fe	18.91	2.43E-03
	^{58}Co	1.51	1.94E-04
	^{60}Co	36.40	4.68E-03
	^{63}Ni	37.24	4.79E-03
	^{95}Zr	0.11	1.39E-05
	^{95}Nb	0.17	2.17E-05
	^{99}Tc	0.67	8.64E-05
	^{137}Cs	0.55	7.12E-05

2. ESTIMATE OF MAJOR NUCLIDE COMPOSITION:

NRC WASTE CLASS B

	ISOTOPE	PERCENT	CURIES
a.	^{3}H	0.30	7.83E-02
	^{14}C	0.77	2.05E-01
	^{51}Cr	1.49	3.95E-01
	^{54}Mn	0.53	1.40E-01
	^{55}Fe	10.65	2.82E+00
	^{58}Co	5.31	1.41E+00
	^{60}Co	9.63	2.55E+00
	^{59}Ni	0.62	1.65E-01
	^{63}Ni	60.34	1.60E+01
	^{90}Sr	0.14	3.67E-02
	^{95}Zr	0.47	1.23E-01
	^{95}Nb	0.88	2.33E-01
	^{125}Sb	0.10	2.77E-02
	^{134}Cs	1.30	3.44E-01
	^{137}Cs	7.33	1.94E+00
b.	-N/A-	-N/A-	-N/A-
c.	-N/A-	-N/A-	-N/A-
d.	-N/A-	-N/A-	-N/A-
e.	-N/A-	-N/A-	-N/A-

3. Solid Waste Disposition

Number of Shipments	Mode of Transportation	Destination
7	Hittman Transport	Energy Solutions – Barnwell
14	Hittman Transport	Energy Solutions – Bear Creek
1	Land Star Transport	Energy Solutions – Bear Creek
2	Land Star Transport	Energy Solutions – Gallaher Rd

B. IRRADIATED FUEL SHIPMENTS (Disposition)

Number of Shipments	Mode of Transportation	Destination
None	N/A	N/A

4.0 Doses to Members of the Public inside the Site Boundary

4.1 Regulatory Requirements

ODCM 7.2.2.3 states in part:

"The report shall also include assessment of the radiation doses from radioactive liquid and gaseous effluents to MEMBERS OF THE PUBLIC due to their activities inside the SITE BOUNDARY during the report period; this assessment must be performed in accordance with Chapter 6. All assumptions used in making these assessments (i.e., specific activity, exposure time, and location) shall be included in the report".

4.2 Demonstration of Compliance

The location of concern within the site boundary is the Visitors Center. The activities at the Visitor Center consist of occasional attendance at meetings and/or short visits for informational purposes.

There will be no radiation dose at this location due to radioactive liquid effluents. Delineated in Table 4-1 for this location are the values of the basic data assumed in the dose assessment due to radioactive gaseous effluents. Listed in this table are distance and direction from a point midway between the center of Unit 1 and the Unit 2 reactors, the dispersion and deposition factors for any releases from the plant vent (mixed mode) and from the turbine building (ground level), and the estimated maximum occupancy factor for an individual and the assumed age group of this individual.

The source term is listed in Tables 2-2A, and 2-2B for the mixed mode releases. Similarly, it is listed in Tables 2-3A and 2-3B for the ground level releases.

The maximum doses in units of mrem to a MEMBER OF THE PUBLIC due to their activities inside the site boundary during the reporting period are presented in Table 4-1.

Table 4-1

Vogtle Electric Generating Plant
RADIOACTIVE EFFLUENT RELEASE REPORT - 2015
Doses to a Member of the Public Due to Activities Inside the Site Boundary

Unit: Site

Starting: 1-Jan-2015 **Ending: 31-Dec-2015**

Location Name: Visitor's Center Receptor
Distance (kilometers): 4.47E-01
Sector: SE
Occupancy Factor: 4.57E-04

Age Group: Child

Mixed Mode Release	Noble Gas	X/Q (sec/m3): 7.12E-07	
Ground Level Release	Noble Gas	X/Q (sec/m3): 5.93E-06	
Mixed Mode Release	Particulate and Radioiodine	X/Q (sec/m3): 6.74E-07	D/Q (m-2): 5.77E-09
Ground Level Release	Particulate and Radioiodine	X/Q (sec/m3): 5.58E-06	D/Q (m-2): 2.28E-08

	Units	1ST Quarter	2ND Quarter	3RD Quarter	4TH Quarter	Year
Kidney	mRem	1.53E-09	1.57E-09	2.25E-09	1.34E-09	6.69E-09
Gi-Lli	mRem	1.53E-09	1.57E-09	2.25E-09	1.34E-09	6.69E-09
Bone	mRem	0.00E+00	0.00E+00	0.00E+00	6.94E-13	6.94E-13
Liver	mRem	1.53E-09	1.57E-09	2.25E-09	1.34E-09	6.69E-09
Thyroid	mRem	1.53E-09	1.57E-09	2.25E-09	1.43E-09	6.79E-09
Lung	mRem	1.53E-09	1.57E-09	2.25E-09	1.34E-09	6.69E-09
Total Body	mRem	1.53E-09	1.57E-09	2.25E-09	1.34E-09	6.69E-09
Skin	mRem	0.00E+00	0.00E+00	0.00E+00	5.01E-13	5.01E-13

Table 4-1

Vogtle Electric Generating Plant
RADIOACTIVE EFFLUENT RELEASE REPORT - 2015
Doses to a Member of the Public Due to Activities Inside the Site Boundary

Unit: Site

Starting: 1-Jan-2015 **Ending: 31-Dec-2015**

Location Name: Units 3&4 Construction
Distance (kilometers): 4.83E-01
Sector: SW
Occupancy Factor: 2.37E-01

Age Group: Adult

Mixed Mode Release	Noble Gas	X/Q (sec/m3): 9.75E-07	
Ground Level Release	Noble Gas	X/Q (sec/m3): 1.81E-05	
Mixed Mode Release	Particulate and Radioiodine	X/Q (sec/m3): 9.17E-07	D/Q (m-2): 7.14E-09
Ground Level Release	Particulate and Radioiodine	X/Q (sec/m3): 6.96E-06	D/Q (m-2): 2.88E-08

	Units	1ST Quarter	2ND Quarter	3RD Quarter	4TH Quarter	Year
Total Body	mRem	1.22E-06	1.26E-06	1.85E-06	1.11E-06	5.44E-06
Bone	mRem	0.00E+00	0.00E+00	0.00E+00	3.66E-10	3.66E-10
Thyroid	mRem	1.22E-06	1.26E-06	1.85E-06	1.16E-06	5.49E-06
Lung	mRem	1.22E-06	1.26E-06	1.85E-06	1.11E-06	5.44E-06
Skin	mRem	0.00E+00	0.00E+00	0.00E+00	3.28E-10	3.28E-10
Liver	mRem	1.22E-06	1.26E-06	1.85E-06	1.11E-06	5.44E-06
GI-Lli	mRem	1.22E-06	1.26E-06	1.85E-06	1.11E-06	5.44E-06
Kidney	mRem	1.22E-06	1.26E-06	1.85E-06	1.11E-06	5.44E-06

5.0 Total Dose from Uranium Fuel Cycle (40CFR190)

5.1 Regulatory Requirements

ODCM 5.1 states in part that the annual (calendar year) dose or dose commitment to any MEMBER OF THE PUBLIC due to releases of radioactivity and to radiation from uranium fuel cycle sources shall be limited to less than or equal to 25 mrems to the whole body or to any organ, except the thyroid, which shall be limited to less than or equal to 75 mrems.

5.2 Demonstration of Compliance

No dose limits stated in ODCM Sections 2.1.3, 3.1.3, and 3.1.4 were exceeded. Therefore, compliance with 40 CFR 190 dose limits was demonstrated in accordance with the requirements of ODCM Section 5.1.3.

6.0 Meteorological Data

ODCM 7.2.2.2 states in part:

The Radioactive Effluent Release Report shall include an annual summary of hourly meteorological data collected over the previous year. This annual summary may be either in the form of an hour-by-hour listing of wind speed, wind direction, atmospheric stability, and precipitation (if measured) on magnetic tape; or in the form of joint frequency distributions of wind speed, wind direction and atmospheric stability.

In lieu of submission with the Radioactive Effluent Release Report, the licensee has the option of retaining this summary of required meteorological data on site in a file that shall be provided to the NRC upon request.

7.0 Program Deviations

7.1 Inoperable Liquid or Gaseous Effluent Monitoring Instrumentation

7.1.1 Regulatory Requirement

ODCM 7.2.2.6 states in part that the report shall include deviations from the liquid and gaseous effluent monitoring instrumentation operability requirements included in Sections 2.1.1 and 3.1.1, respectively. The report shall include an explanation as to why the inoperability of liquid or gaseous effluent monitoring instrumentation was not corrected within the specified time requirement.

7.1.2 Description of Deviations

(1) The inoperability of liquid and gaseous effluent monitors not corrected within the specified time for this reporting period is detailed below. When applicable, compensatory measures were utilized per ODCM Action Statements:

a. 1RE-0018
This monitor was out of service greater than 30 days due to high background counts. A maintenance work order was generated to troubleshoot the unstable background. Removed from service October 21, 2015 returned to service January 7, 2016.

b. 1FT-12839
The flow transmitter for 1FT-12839 failed calibration and as a result it was out of service greater than 30 days. The flow transmitter was returned to service March 30, 2015.

(2) Table 2-3 of the ODCM requires monthly and quarterly compositing of liquid batch releases for alpha and beta analysis. For the weekly composite of 9/21/15, one waste monitor tank was not included in this composite. The 1000 mL composite should have consisted of 4 releases for the week instead of 3. Due to the quantity of releases during the month (9 not including this tank) and for the quarter (24), the composites were representative of the waste releases and the required alpha and beta results are considered valid.

(3) ODCM requires continuous air sampler operation. During a power failure at the Met Tower, sample time was lost in this area for several hours and represents a deviation to the Radiological Environmental Monitoring Program but it is not a reportable event.

7.2 Tanks Exceeding Curie Content Limits

7.2.1 Regulatory Requirements

ODCM 7.2.2.6 states in part that the report shall include a description of the events leading to liquid holdup tanks or gas storage tanks exceeding the limits of Technical Specifications 5.5.12.

7.2.2 Description of Deviations

Limits for outdoor liquid hold-up tanks used for radioactive liquids were not exceeded during this reporting period.
Limits for the gas storage tanks were not exceeded during this reporting period.

8.0 Changes to the Vogtle Electric Generating Plant Offsite Dose Calculation Manual (ODCM)

8.1 Regulatory Requirements

ODCM 7.2.2.5 states in part that changes to the ODCM shall be submitted with the Radioactive Effluent Release Report. These changes may be due to changes in the radiological environmental monitoring program sampling locations as required by ODCM 4.1.1.2.3 or changes to dose calculation locations as required by ODCM 4.1.2.2.2. Land uses and dose calculation locations within five miles of VEGP must be determined by a land use census as required by ODCM 4.1.2.

8.2 Description of Changes

The changes made to VEGP ODCM in 2015 are reflected in Version 30, dated August, 2015. The changes are as follows:

(1) The Milk control station was changed from the Seven Oaks Dairy to the Milky Way Dairy. The Milky Way Dairy meets the 10 mile distance specification and it is in a low-prevalence wind sector.

(2) The Beaufort-Jasper drinking water station was deleted in the sampling program for Table 4-1. This leaves two locations that are being samleed. Samples from the Beaufort-Jasper drinking water station were compared to the Purrysburg drinking water sample results and the Purrysburg station is more conservative. Deleting the Beaufort-Jasper drinking water station eliminates redundancy.

(3) Wells 805A, 27 and 29 have degraded over time. Additionally, they are older and of non-standard construction resulting in samples with high potential for interferences.The SCS Geologist had determined that enough background data had been gathered from these wells and they will be used only for water level. Well 803A was abandoned due to Voglte 3&4 construction.

(4) Table 4-1 specifies a sample frequency of SEMI-MONTHLY for milk samples. SEMI-MONTHLY is defined in Section 10.1 definition of FREQUENCY NOTATION. This is an editorial change to add a definition.

(5) The word "OPERABLE" refers only to Technical Specifications components. When referring, in a regulatory sense, to the ability of a system, structure, or component (SSC) to perform its primary function, "OPERABLE" is used for Tech Spec components; "FUNCTIONAL" is used for non-Tech Spec components. Consequently, any documents referring to the "OPERABILITY" of a non-Tech Spec SSC should be changed to instead reference the "FUNCTIONALITY" of that component. The purpose in making the distinction is to provide clarity when communicating the regulatory status of SSCs.

9.0 Major Changes to Liquid, Gaseous, or Solid Radwaste Treatment Systems

9.1 Regulatory Requirements

ODCM 7.2.2.7 states in part:

As required by Sections 2.1.5 and 3.1.6, licensee initiated MAJOR CHANGES TO RADIOACTIVE WASTE TREATMENT SYSTEMS (liquid and gaseous) shall be reported to the Nuclear Regulatory Commission in the Radioactive Effluent Release Report covering the period in which the change was reviewed and accepted for implementation.

Note 1: In lieu of inclusion in the Radioactive Effluents Release Report, this same information may be submitted as part of the annual FSAR update.

PCP 12.1 states in part:

Licensee major initiated changes to the solid radioactive waste treatment system shall be reported to the Nuclear Regulatory Commission in the Radioactive Effluent Release Report for the period in which the change was implemented.

9.2 Description of Major Changes

Gaseous Radwaste System

There were no major changes to the gaseous radwaste systems in the 2015 assessment period.

Liquid Radwaste System

There were no major changes to the liquid radwaste systems occurred during the 2015 assessment period.

Solid Radwaste System

There were no major changes to the solid radwaste systems in the 2015 assessment period.

Appendix A
Vogtle Electric Generating Plant

CARBON-14

Carbon-14 (C-14) is a naturally-occurring radionuclide with a 5730 year half life. Nuclear weapons testing in the 1950s and 1960s significantly increased the amount of C-14 in the atmosphere. Nuclear power plants also produce C-14, but the amount is infinitesimal compared to what has been distributed in the environment due to weapons testing and what is produced by natural cosmic ray interactions.

As nuclear plants have improved gaseous waste processing systems and improved fuel performance, the percentages of "principal radionuclides" in gaseous effluents have changed, and C-14 has become a larger percentage. "Principal radionuclides" are determined based on public dose contribution or the amount of activity discharged compared to other radionuclides of the same effluent type. In Revision 2 (June 2009) of Regulatory Guide 1.21 (RG 1.21), "Measuring, Evaluating, and Reporting Radioactive Material in Liquid and Gaseous Effluents and Solid Waste," the NRC recommended re-evaluating "principal radionuclides" and reporting C-14 as appropriate. In 2010 Radioactive Effluent Release Reports, virtually all U. S. nuclear power plants started reporting C-14 amounts released and resulting doses to the maximally exposed member of the public.

Because C-14 is considered a hard-to-detect radionuclide which must be chemically separated from the effluent stream before it can be measured, RG 1.21 provides the option of calculating the C-14 source term based on power generation. The Electric Power Research Institute (EPRI) developed an accepted methodology for calculating C-14, and published the results in Technical Report 1021106 (December 2010), "Estimation of Carbon-14 in Nuclear Power Plant Gaseous Effluents." Evaluation of C-14 in radioactive liquid effluents is not required because the quantity and dose contribution has been determined to be insignificant.

At Plant Vogtle, the annual quantity of C-14 released in gaseous effluents was estimated to be 12.08 Curies (per unit). Approximately 30% of the C-14 released is in the form of $^{14}CO_2$ and is incorporated into plants through photosynthesis. Ingestion dose results from this pathway. The remaining 70% is estimated to be organic. Both the organic and inorganic forms of C-14 contribute to inhalation dose. A child is the maximally exposed individual, and bone dose is the highest organ dose. Using the dose calculation methodology from the Vogtle ODCM, the resulting bone dose to a child located at the controlling receptor location would be 8.46E-02 mrem in a year which is 0.56% of the regulatory limit of 15 mrem per year (per unit) to any organ due to gaseous effluents. The resulting total body dose to a child located at the controlling receptor location would be 1.69E-02 mrem in a year which is 0.11% of the regulatory limit of 15 mrem per year (per unit) total body dose due to gaseous effluents

Edwin I. Hatch Nuclear Plant Units 1&2;
Joseph M. Farley Nuclear Plant Units 1&2;
Vogtle Electric Generating Plant Units 1&2
Annual Radioactive Effluent Release Reports and Offsite Dose Calculation Manual for 2015

Enclosure 4

Vogtle Electric Generating Plant Units 1&2
Offsite Dose Calculation Manual – Version 31

OFFSITE DOSE CALCULATION MANUAL

FOR

SOUTHERN NUCLEAR OPERATING COMPANY

VOGTLE ELECTRIC GENERATING PLANT

Version 31

APRIL 2016

TABLE OF CONTENTS

PAGE

TABLE OF CONTENTS i

LIST OF TABLES iv

LIST OF FIGURES vi

REFERENCES vii

CHAPTER 1: INTRODUCTION 1-1

CHAPTER 2: LIQUID EFFLUENTS 2-1
2.1 LIMITS OF OPERATION 2-1
2.1.1 Liquid Effluent Monitoring Instrumentation Control 2-1
2.1.2 Liquid Effluent Concentration Control 2-7
2.1.3 Liquid Effluent Dose Control 2-10
2.1.4 Liquid Radwaste Treatment System Control 2-11
2.1.5 Major Changes to Liquid Radioactive Waste Treatment Systems 2-12
2.2 LIQUID RADWASTE TREATMENT SYSTEM 2-13
2.3 LIQUID EFFLUENT MONITOR SETPOINTS 2-17
2.3.1 General Provisions Regarding Setpoints 2-17
2.3.2 Setpoints for Radwaste System Discharge Monitors 2-19
2.3.3 Setpoints for Monitors on Normally Low-Radioactivity Streams 2-25
2.4 LIQUID EFFLUENT DOSE CALCULATIONS 2-26
2.4.1 Calculation of Dose 2-26
2.4.2 Calculation of $A_{i\tau}$ 2-27
2.4.3 Calculation of CF_{iv} 2-28
2.5 LIQUID EFFLUENT DOSE PROJECTIONS 2-37
2.5.1 Thirty-One Day Dose Projections 2-37
2.5.2 Dose Projections for Specific Releases 2-37
2.6 DEFINITIONS OF LIQUID EFFLUENT TERMS 2-38

CHAPTER 3: GASEOUS EFFLUENTS 3-1
3.1 LIMITS OF OPERATION 3-1
3.1.1 Gaseous Effluent Monitoring Instrumentation Control 3-1
3.1.2 Gaseous Effluent Dose Rate Control 3-7
3.1.3 Gaseous Effluent Air Dose Control 3-10
3.1.4 Control on Gaseous Effluent Dose to a Member of the Public 3-11
3.1.5 Gaseous Radwaste Treatment System Control 3-12
3.1.6 Major Changes to Gaseous Radioactive Waste Treatment Systems 3-13

TABLE OF CONTENTS (continued)

PAGE

3.2 GASEOUS WASTE PROCESSING SYSTEM 3-14
3.3 GASEOUS EFFLUENT MONITOR SETPOINTS 3-20
3.3.1 General Provisions Regarding Noble Gas Monitor Setpoints 3-20
3.3.2 Setpoint for the Final Noble Gas Monitor on Each Release Pathway 3-22
3.3.3 Setpoints for Noble Gas Monitors on Effluent Source Streams 3-25
3.3.4 Determination of Allocation Factors, AG 3-27
3.3.5 Setpoints for Noble Gas Monitors with Special Requirements 3-29
3.3.6 Setpoints for Particulate and Iodine Monitors 3-29
3.4 GASEOUS EFFLUENT COMPLIANCE CALCULATIONS 3-30
3.4.1 Dose Rates at and Beyond the Site Boundary 3-30
3.4.2 Noble Gas Air Dose at or Beyond Site Boundary 3-31
3.4.3 Dose to a Member of the Public at or Beyond Site Boundary 3-35
3.4.4 Dose Calculations to Support Other Requirements 3-38
3.5 GASEOUS EFFLUENT DOSE PROJECTIONS 3-44
3.5.1 Thirty-One Day Dose Projections 3-44
3.5.2 Dose Projections for Specific Releases 3-45
3.6 DEFINITIONS OF GASEOUS EFFLUENT TERMS 3-46

CHAPTER 4: RADIOLOGICAL ENVIRONMENTAL MONITORING PROGRAM 4-1
4.1 LIMITS OF OPERATION 4-1
4.1.1 Radiological Environmental Monitoring 4-1
4.1.2 Land Use Census 4-9
4.1.3 Interlaboratory Comparison Program 4-10
4.2 RADIOLOGICAL ENVIRONMENTAL MONITORING LOCATIONS 4-11

CHAPTER 5: TOTAL DOSE DETERMINATIONS 5-1
5.1 LIMIT OF OPERATION 5-1
5.1.1 Applicability 5-1
5.1.2 Actions 5-1
5.1.3 Surveillance Requirements 5-1
5.1.4 Basis 5-1
5.2 DEMONSTRATION OF COMPLIANCE 5-3

CHAPTER 6: POTENTIAL DOSES TO MEMBERS OF THE PUBLIC DUE TO THEIR ACTIVITIES INSIDE THE SITE BOUNDARY 6-1
6.1 REQUIREMENT FOR CALCULATION 6-1
6.2 CALCULATIONAL METHOD 6-1

TABLE OF CONTENTS (continued)

PAGE

CHAPTER 7: REPORTS 7-1
7.1 ANNUAL RADIOLOGICAL ENVIRONMENTAL SURVEILLANCE REPORT 7-1
7.1.1 Requirement for Report 7-1
7.1.2 Report Contents 7-1
7.2 RADIOACTIVE EFFLUENT RELEASE REPORT 7-3
7.2.1 Requirement for Report 7-3
7.2.2 Report Contents 7-3
7.3 MONTHLY OPERATING REPORT 7-6
7.4 SPECIAL REPORTS 7-6

CHAPTER 8: METEOROLOGICAL MODELS 8-1
8.1 ATMOSPHERIC DISPERSION 8-1
8.1.1 Ground-Level Releases 8-1
8.1.2 Elevated Releases 8-2
8.1.3 Mixed-Mode Releases 8-4
8.2 RELATIVE DEPOSITION 8-5
8.2.1 Ground-Level Releases 8-5
8.2.2 Elevated Releases 8-5
8.2.3 Mixed-Mode Releases 8-6
8.3 ELEVATED PLUME DOSE FACTORS 8-6

CHAPTER 9: METHODS AND PARAMETERS FOR CALCULATION OF GASEOUS EFFLUENT PATHWAY DOSE FACTORS, R_{aipj} 9-1
9.1 INHALATION PATHWAY FACTOR 9-1
9.2 GROUND PLANE PATHWAY FACTOR 9-2
9.3 GARDEN VEGETATION PATHWAY FACTOR 9-3
9.4 GRASS-COW-MILK PATHWAY FACTOR 9-6
9.5 GRASS-GOAT-MILK PATHWAY FACTOR 9-9
9.6 GRASS-COW-MEAT PATHWAY FACTOR 9-12

CHAPTER 10: DEFINITIONS OF EFFLUENT CONTROL TERMS 10-1
10.1 TERMS SPECIFIC TO THE ODCM 10-1
10.2 TERMS DEFINED IN THE TECHNICAL SPECIFICATIONS 10-5

LIST OF TABLES

		PAGE
Table 2-1.	Radioactive Liquid Effluent Monitoring Instrumentation	2-3
Table 2-2.	Radioactive Liquid Effluent Monitoring Instrumentation Surveillance Requirements	2-5
Table 2-3.	Radioactive Liquid Waste Sampling and Analysis Program	2-8
Table 2-4.	Applicability of Liquid Monitor Setpoint Methodologies	2-18
Table 2-5.	Parameters for Calculation of Doses Due to Liquid Effluent Releases	2-30
Table 2-6.	Element Transfer Factors	2-31
Table 2-7.	Adult Ingestion Dose Factors	2-32
Table 2-8.	Site-Related Ingestion Dose Factors, A_{iT}	2-35
Table 3-1.	Radioactive Gaseous Effluent Monitoring Instrumentation	3-3
Table 3-2.	Radioactive Gaseous Effluent Monitoring Instrumentation Surveillance Requirements	3-5
Table 3-3.	Radioactive Gaseous Waste Sampling and Analysis Program	3-8
Table 3-4.	Applicability of Gaseous Monitor Setpoint Methodologies	3-21
Table 3-5.	Dose Factors for Exposure to a Semi-Infinite Cloud of Noble Gases	3-33
Table 3-6.	Dose Factors for Exposure to Direct Radiation from Noble Gases in an Elevated Finite Plume	3-34
Table 3-7.	Attributes of the Controlling Receptor	3-37
Table 3-8.	R_{aipj} for Ground Plane Pathway, All Age Groups	3-39
Table 3-9.	R_{aipj} for Inhalation Pathway, Child Age Group	3-40
Table 3-10.	R_{aipj} for Inhalation Pathway, Adult Age Group	3-41
Table 3-11.	R_{aipj} for Cow Meat Pathway, Child Age Group	3-42
Table 3-12.	R_{aipj} for Garden Vegetation, Child Age Group	3-43
Table 4-1.	Radiological Environmental Monitoring Program	4-3

LIST OF TABLES (Continued)

		PAGE
Table 4-2.	Reporting Levels for Radioactivity Concentrations in Environmental Samples	4-7
Table 4-3.	Values for the Minimum Detectable Concentration (MDC)	4-8
Table 4-4.	Radiological Environmental Monitoring Locations	4-12
Table 4-5	Groundwater Monitoring Locations	4-15
Table 6-1.	Attributes of Member of the Public Receptor Locations Inside the Site Boundary	6-2
Table 8-1.	Terrain Elevation Above Plant Site Grade	8-7
Table 9-1.	Miscellaneous Parameters for the Garden Vegetation Pathway	9-5
Table 9-2.	Miscellaneous Parameters for the Grass-Cow-Milk Pathway	9-8
Table 9-3.	Miscellaneous Parameters for the Grass-Goat-Milk Pathway	9-11
Table 9-4.	Miscellaneous Parameters for the Grass-Cow-Meat Pathway	9-14
Table 9-5.	Individual Usage Factors	9-15
Table 9-6.	Stable Element Transfer Data	9-16
Table 9-7.	Inhalation Dose Factors for the Infant Age Group	9-17
Table 9-8.	Inhalation Dose Factors for the Child Age Group	9-20
Table 9-9.	Inhalation Dose Factors for the Teenager Age Group	9-23
Table 9-10.	Inhalation Dose Factors for the Adult Age Group	9-26
Table 9-11.	Ingestion Dose Factors for the Infant Age Group	9-29
Table 9-12.	Ingestion Dose Factors for the Child Age Group	9-32
Table 9-13.	Ingestion Dose Factors for the Teenager Age Group	9-35
Table 9-14.	Ingestion Dose Factors for the Adult Age Group	9-38
Table 9-15.	External Dose Factors for Standing on Contaminated Ground	9-41

LIST OF FIGURES

		PAGE
Figure 2-1.	Unit 1 Liquid Radwaste Treatment System	2-14
Figure 2-2.	Unit 2 Liquid Radwaste Treatment System	2-15
Figure 2-3.	Liquid Radwaste Discharge Pathways	2-16
Figure 3-1.	Schematic Diagram of the Gaseous Radwaste Treatment System	3-15
Figure 3-2.	Schematic Diagram of the Unit 1 Plant Vent Release Pathway	3-16
Figure 3-3.	Schematic Diagram of the Unit 2 Plant Vent Release Pathway	3-17
Figure 3-4.	Schematic Diagram of the Turbine Building Vent Release Pathway (Typical of Both Units)	3-18
Figure 3-5.	Schematic Diagram of the Radwaste Processing Facility Ventilation Release Pathway	3-19
Figure 4-1.	Terrestrial Stations Near Site Boundary	4-16
Figure 4-2.	Terrestrial Stations and Aquatic Stations, 0-5 Miles	4-17
Figure 4-3.	Terrestrial Stations Beyond 5 Miles	4-18
Figure 4-4.	Drinking Water Stations	4-19
Figure 4-5	Groundwater Monitoring Wells	4-20
Figure 8-1.	Vertical Standard Deviation of Material in a Plume (σ_z)	8-8
Figure 8-2.	Terrain Recirculation Factor (K_r)	8-9
Figure 8-3.	Plume Depletion Effect for Ground Level Releases	8-10
Figure 8-4.	Plume Depletion Effect for 30-Meter Releases	8-11
Figure 8-5.	Plume Depletion Effect for 60-Meter Releases	8-12
Figure 8-6.	Plume Depletion Effect for 100-Meter Releases	8-13
Figure 8-7.	Relative Deposition for Ground-Level Releases	8-14
Figure 8-8.	Relative Deposition for 30-Meter Releases	8-15
Figure 8-9.	Relative Deposition for 60-Meter Releases	8-16
Figure 8-10.	Relative Deposition for 100-Meter (or Greater) Releases	8-17

REFERENCES

1. J.S. Boegli, R.R. Bellamy, W.L. Britz, and R.L. Waterfield, "Preparation of Radiological Effluent Technical Specifications for Nuclear Power Plants," NUREG-0133, October 1978.

2. "Calculation of Annual Doses to Man from Routine Releases of Reactor Effluents for the Purpose of Evaluating Compliance with 10 CFR 50, Appendix I," U.S. NRC Regulatory Guide 1.109, March 1976.

3. "Calculation of Annual Doses to Man from Routine Releases of Reactor Effluents for the Purpose of Evaluating Compliance with 10 CFR 50, Appendix I," U.S. NRC Regulatory Guide 1.109, Revision 1, October 1977.

4. "Methods for Estimating Atmospheric Transport and Dispersion of Gaseous Effluents in Routine Releases from Light-Water-Cooled Reactors," U.S. NRC Regulatory Guide 1.111, March 1976.

5. "Methods for Estimating Atmospheric Transport and Dispersion of Gaseous Effluents in Routine Releases from Light-Water-Cooled Reactors," U.S. NRC Regulatory Guide 1.111, Revision 1, July 1977.

6. "Estimating Aquatic Dispersion of Effluents from Accidental and Routine Reactor Releases for the Purpose of Implementing Appendix I," U.S. NRC Regulatory Guide 1.113, April 1977.

7. W.R. Stokes III, T.W. Hale, J.L. Pearman, and G.R. Buell, "Water Resources Data, Georgia, Water Year 1983," U.S. Geological Survey Water Data Report GA-83-1, June 1984.

8. Direct communication with the Water Resources Division, U.S. Geological Survey, U.S. Department of the Interior, February 1985.

9. Bernd Kahn, *et al.*, "Bioaccumulation of P-32 in Bluegill and Catfish," NUREG/CR-3981, February 1985.

10. Memo from S.E. Ewald, Georgia Power Company, to C.C. Eckert, Georgia Power Company, May 9, 1988.

11. Vogtle Electric Generating Plant Units 1 and 2 Final Safety Analysis Report, Georgia Power Company.

12. Vogtle Electric Generating Plant Units 1 and 2 Environmental Report - Operating License Stage, Georgia Power Company.

13. Memo from A.C. Stalker, Georgia Power Company, to D.F. Hallman, Georgia Power Company, May 9, 1988.

14. Vogtle Electric Generating Plant Land Use Survey - 1988, Georgia Power Company, April 1988.

15. Letter to Southern Company Services from Pickard, Lowe, and Garrick, Inc., Washington, D.C., April 27, 1988.

16. Letter to Bill Ollinger, Georgia Power Company, from T.L. Broadwell, Georgia Power Company, Atlanta, Georgia, June 22, 1988.

17. Letter to Bill Ollinger, Georgia Power Company, from R.D. Just, Georgia Power Company, Atlanta, Georgia, July 8, 1988.

18. L.A. Currie, Lower Limit of Detection: Definition and Elaboration of a Proposed Position of Radiological Effluent and Environmental Measurements, U.S. NRC Report NUREG/CR-4007, 1984.

19. "Radiological Assessment Branch Technical Position," U.S. Nuclear Regulatory Commission, Revision 1, November 1979.

20. D.C. Kocher, "Radioactive Decay Data Tables," U.S. DOE Report DOE/TIC-11026, 1981.

21. J.E. Till and H.R. Meyer, eds., Radiological Assessment, U.S. NRC Report NUREG/CR-3332, 1983.

22. Letter to Bill Ollinger, Southern Nuclear Operating Company, from Gary D. Johnson, Georgia Power Company, December 21, 1995.

23. Letter to Mary Beth Lloyd, Southern Nuclear Operating Company, from Steven Bearce, Southern Company Services, February 2, 2009.

24. EV-13-1797, EACRS Intracompany Correspondence, "Vogtle REMP Drinking Water Sampling Stations"

25. EV-14-0226, EACRS Intracompany Correspondence, "Vogtle 1 and 2 Tritium Monitoring Well Update"

CHAPTER 1

INTRODUCTION

The Offsite Dose Calculation Manual is a supporting document of the Technical Specifications. As such, it describes the methodology and parameters to be used in the calculation of offsite doses due to radioactive liquid and gaseous effluents, and in the calculation of liquid and gaseous effluent monitoring instrumentation alarm setpoints. In addition, it contains the following:

- The controls required by the Technical Specifications, governing the radioactive effluent and radiological environmental monitoring programs.
- Schematics of liquid and gaseous radwaste effluent treatment systems, which include designation of release points to UNRESTRICTED AREAS.
- A list and maps indicating the specific sample locations for the Radiological Environmental Monitoring Program.
- Specifications and descriptions of the information that must be included in the Annual Radiological Environmental Operating Report and the Radioactive Effluent Release Report required by the Technical Specifications.

The ODCM will be maintained at the plant for use as a reference guide and training document of accepted methodologies and calculations. Changes in the calculational methods or parameters will be incorporated into the ODCM in order to ensure that it represents current methodology in all applicable areas. Any computer software used to perform the calculations described will be maintained current with the ODCM.

Equations and methods used in the ODCM are based on those presented in NUREG–0133 (Reference 1), in Regulatory Guide 1.109 (References 2 and 3), in Regulatory Guide 1.111 (References 4 and 5), and in Regulatory Guide 1.113 (Reference 6).

CHAPTER 2

LIQUID EFFLUENTS

2.1 LIMITS OF OPERATION

The following Liquid Effluent Controls implement requirements established by Technical Specifications Section 5.0. Terms printed in all capital letters are defined in Chapter 10.

2.1.1 Liquid Effluent Monitoring Instrumentation Control

In accordance with Technical Specification 5.5.4.a, the radioactive liquid effluent monitoring instrumentation channels shown in Table 2-1 shall be FUNCTIONAL with their alarm/trip setpoints set to ensure that the limits specified in Section 2.1.2 are not exceeded. The alarm/trip setpoints of these channels shall be determined in accordance with Section 2.3.

2.1.1.1 Applicability

This limit applies at all times.

2.1.1.2 Actions

With a radioactive liquid effluent monitoring instrumentation channel alarm/trip setpoint less conservative than required by the above control, immediately suspend the release of radioactive liquid effluents monitored by the affected channel, declare the channel NON-FUNCTIONAL, or change the setpoint to a conservative value.

With less than the minimum number of radioactive liquid effluent monitoring instrumentation channels FUNCTIONAL, take the ACTION shown in Table 2-1. Restore the NON-FUNCTIONAL instrumentation to FUNCTIONAL status within 30 days, or if unsuccessful, explain in the next Radioactive Effluent Release Report, per Technical Specification 5.6.3, why this NON-FUNCTIONALITY was not corrected in a timely manner.

This control does not affect shutdown requirements or MODE changes.

2.1.1.3 Surveillance Requirements

Each radioactive liquid effluent monitoring instrumentation channel shall be demonstrated FUNCTIONAL by performance of the CHANNEL CHECK, SOURCE CHECK, CHANNEL CALIBRATION, and CHANNEL FUNCTIONALITY TEST operations at the frequencies shown in Table 2-2. Specific instrument numbers are provided in parentheses for information only. The numbers apply to each unit. These numbers will help to identify associated channels or loops and are not intended to limit the requirements to the specific instruments associated with the number.

2.1.1.4 Basis

The radioactive liquid effluent instrumentation is provided to monitor and control, as applicable, the releases of radioactive materials in liquid effluents during actual or potential releases of liquid effluents. The Alarm/Trip Setpoints for these instruments shall be calculated and adjusted in accordance with the methodology and parameters in Section 2.3 to ensure that the alarm/trip will occur prior to exceeding the limits of Section 2.1.2. The FUNCTIONALITY and use of this instrumentation is consistent with the requirements of General Design Criteria 60, 63, and 64 of Appendix A to 10 CFR Part 50.

Table 2-1. Radioactive Liquid Effluent Monitoring Instrumentation

Instrument	FUNCTIONALITY Requirements[a]	
	Minimum Channels FUNCTIONAL	ACTION
1. Radwaste Monitors Providing Alarm and Automatic Termination of Release		
a. Liquid Radwaste Effluent Line (RE–0018)	1	37
b. Steam Generator Blowdown Effluent Line (RE-0021)	1	38
c. Turbine Building Effluent Line (RE–0848)	1	38
2. Radwaste Monitors Providing Alarm, but Not Automatic Termination of Release		
NSCW Effluent Line (RE-0020 A)	1	39
NSCW Effluent Line (RE-0020 B)	1	39
3. Flowrate Measurement Devices		
a. Liquid Radwaste Effluent Line (FT–0018), (FT-1084A/B), or (FT-1085A/B)	1	40
b. Steam Generator Blowdown Effluent Line (FT-0021)	1	40
c. Flow to Blowdown Sump (AFQI-7620, FI7620A)	1	40

a. All requirements in this table apply to each unit.

Table 2-1 (contd). Notation for Table 2-1 — ACTION Statements

ACTION 37 — With the number of channels FUNCTIONAL less than required by the Minimum Channels FUNCTIONAL requirement, effluent releases may continue provided that prior to initiating a release:

a. The local radiation monitor reading (if functional) is recorded at least once per 12 hours during the release or at least two independent samples are analyzed in accordance with Section 2.1.2.3, and

b. At least two technically qualified members of the Facility Staff independently verify the discharge line valving and the release rate calculations.

Otherwise, suspend release of radioactive effluents via this pathway.

ACTION 38 — With the number of channels FUNCTIONAL less than required by the Minimum Channels FUNCTIONAL requirement, effluent releases via this pathway may continue provided the local radiation monitor reading (if functional) is recorded at least once per 12 hours or grab samples are analyzed for gross radioactivity at a MINIMUM DETECTABLE CONCENTRATION no higher than 1×10^{-7} μCi/mL using gross beta/gamma counting or 5×10^{-7} μCi/mL for the principal gamma emitters using gamma-ray spectroscopy.

a. At least once per 12 hours when the specific activity of the secondary coolant is greater than 0.01 μCi/gram DOSE EQUIVALENT I–131.

b. At least once per 24 hours when the specific activity of the secondary coolant is less than or equal to 0.01 μCi/gram DOSE EQUIVALENT I–131.

ACTION 39 — With the number of channels FUNCTIONAL less than required by the Minimum Channels FUNCTIONAL requirement, effluent releases via this pathway may continue provided that, at least once per 12 hours, the local radiation monitor reading (if functional) is recorded or grab samples are collected and analyzed for radioactivity at a MINIMUM DETECTABLE CONCENTRATION no higher than 1×10^{-7} μCi/mL using gross beta/gamma counting or 5×10^{-7} μCi/mL for the principal gamma emitters using gamma-ray spectroscopy.

ACTION 40 — With the number of channels FUNCTIONAL less than required by the Minimum Channels FUNCTIONAL requirement, effluent releases via this pathway may continue provided the flowrate is estimated at least once per 4 hours during actual releases. Pump curves generated in place may be used to estimate flow.

Table 2-2. Radioactive Liquid Effluent Monitoring Instrumentation Surveillance Requirements

Instrument	Surveillance Requirements[d]			
	CHANNEL CHECK	SOURCE CHECK	CHANNEL CALIBRA-TION	CHANNEL FUNCTIONAL TEST
1. Radwaste Monitors Providing Alarm and Automatic Termination of Release				
a. Liquid Radwaste Effluent Line (RE-0018)	D	P	R[b]	R[a(1)]
b. Steam Generator Blowdown Effluent Line (RE-0021)	D	M	R[b]	R[a(1)]
c. Turbine Building Effluent Line (RE-0848)	D	M	R[b]	R[a(1)]
2. Radwaste Monitors Providing Alarm, but Not Automatic Termination of Release				
NSCW Effluent Line (RE-0020 A&B)	D	M	R[b]	R[a(2)]
3. Flowrate Measurement Devices				
a. Liquid Radwaste Effluent Line (FT-0018), (FT-1084A/B), or (FT-1085A/B)	D[c]	NA	R	NA
b. Steam Generator Blowdown Effluent Line (FT-0021)	D[c]	NA	R	NA
c. Flow to Blowdown Sump (AFQI-7620, FI7620A)	D[c]	NA	R	Q

Table 2-2 (contd). Notation for Table 2-2

a. In addition to the basic functions of a CHANNEL FUNCTIONAL TEST (Section 10.2):

(1) The CHANNEL FUNCTIONAL TEST shall also demonstrate that automatic isolation of this pathway and control room annunciation occurs (for item a. below only); and control room CRT indication occurs (if any of the following conditions exist):

(a) Instrument indicates measured levels above the alarm/trip setpoint;

(b) Instrument indicates an "Equipment Trouble" alarm;

(c) Instrument indicates a "Low" alarm; or

(d) Instrument indicates channel "Deactivated".

(2) The CHANNEL FUNCTIONAL TEST shall also demonstrate that control room annunciation occurs (for item a. below only); and that control room CRT indication occurs (if any of the following conditions exist):

(a) Instrument indicates measured levels above the alarm/trip setpoint;

(b) Instrument indicates an "Equipment Trouble" alarm;

(c) Instrument indicates a "Low" alarm; or

(d) Instrument indicates channel "Deactivated".

b. The initial CHANNEL CALIBRATION shall be performed using one or more of the reference standards certified by the National Institute of Standards and Technology or using standards that have been obtained from suppliers that participate in measurements assurance activities with NIST. These standards shall permit calibrating the system over its intended range of energy and measurement range. For subsequent CHANNEL CALIBRATION, sources that have been related to the initial calibration shall be used.

c. CHANNEL CHECK shall consist of verifying indication of flow during periods of release. CHANNEL CHECK shall be made at least once per 24 hours on days on which continuous, periodic, or batch releases are made.

d. All requirements in this table apply to each unit.

2.1.2 Liquid Effluent Concentration Control

In accordance with Technical Specifications 5.5.4.b and 5.5.4.c, the concentration of radioactive material released in liquid effluents to UNRESTRICTED AREAS shall be limited at all times to ten times the concentrations specified in 10 CFR 20, Appendix B, Table 2, Column 2 for radionuclides other than dissolved or entrained noble gases. For dissolved or entrained noble gases, the concentration shall be limited to 1×10^{-4} µCi/mL total activity.

2.1.2.1 Applicability

This limit applies at all times.

2.1.2.2 Actions

With the concentration of radioactive material released in liquid effluents to UNRESTRICTED AREAS exceeding the limits stated in Section 2.1.2, immediately restore the concentration to within the stated limits.

This control does not affect shutdown requirements or MODE changes.

2.1.2.3 Surveillance Requirements

The radioactivity content of each batch of radioactive liquid waste shall be determined by sampling and analysis in accordance with Table 2-3. The results of radioactive analyses shall be used with the calculational methods in Section 2.3 to assure that the concentration at the point of release is maintained within the limits of Section 2.1.2.

2.1.2.4 Basis

This control is provided to ensure that the concentration of radioactive materials released in liquid waste effluents to UNRESTRICTED AREAS will be less than ten times the concentration levels specified in 10 CFR 20, Appendix B, Table 2, Column 2. This limitation provides additional assurance that the levels of radioactive materials in bodies of water in UNRESTRICTED AREAS will result in exposures within (1) the Section II.A design objectives of Appendix I, 10 CFR 50, to a MEMBER OF THE PUBLIC, and (2) the limits of 10 CFR 20.1301 to the population. The concentration limit for dissolved or entrained noble gases is based upon the assumption that Xe–135 is the controlling radioisotope and its MPC in air (submersion) was converted to an equivalent concentration in water using the methods described in International Commission on Radiological Protection (ICRP) Publication 2 (1959). The resulting concentration of 2×10^{-4} was then multiplied by the ratio of the effluent concentration limit for Xe-135, stated in Appendix B, Table 2, Column 1 of 10 CFR 20 (paragraphs 20.1001 to 20.2401), to the MPC for Xe-135, stated in Appendix B, Table II, Column 1 of 10 CFR 20 (paragraphs 20.1 to 20.601), to obtain the limiting concentration of 1×10^{-4} µCi/mL.

Table 2-3. Radioactive Liquid Waste Sampling and Analysis Program

Liquid Release Type	Sampling and Analysis Requirements[a,b]			
	Sampling FREQUENCY	Minimum Analysis FREQUENCY	Type of Activity Analysis	MINIMUM DETECTABLE CONCENTRATION (MDC) (µCi/mL)
A. BATCH RELEASES				
1. Waste Monitor Tank 2. Drainage of System	P Each BATCH	P Each BATCH	PRINCIPAL GAMMA EMITTERS I-131	5 E-7 1 E-6
	P One BATCH/M	M	Dissolved and Entrained Gases (Gamma Emitters)	1 E-5
	P Each BATCH	M COMPOSITE	H-3 Gross Alpha	1 E-5 1 E-7
	P Each BATCH	Q COMPOSITE	Sr-89, Sr-90 Fe-55	5 E-8 1 E-6
B. CONTINUOUS RELEASES				
Waste Water Retention Basin[c]	Continuous	W COMPOSITE	PRINCIPAL GAMMA EMITTERS I-131	5 E-7 1 E-6
	M Grab Sample	M	Dissolved and Entrained Gases (Gamma Emitters)	1 E-5
	Continuous	M COMPOSITE	H-3 Gross Alpha	1 E-5 1 E-7
	Continuous	Q COMPOSITE	Sr-89, Sr-90 Fe-55	5 E-8 1 E-6

Table 2-3 (contd). Notation for Table 2-3

a. All requirements in this table apply to each unit.

b. Terms printed in all capital letters are defined in Chapter 10.

c. The WWRB will not be considered a release point until there is a confirmed primary to secondary leak. Once a primary to secondary leak has been confirmed, this composite shall be analyzed as specified until the leak is repaired. This surveillance will continue until three consecutive weekly composite samples have shown no activity above the MDC.

2.1.3 Liquid Effluent Dose Control

In accordance with Technical Specifications 5.5.4.d and 5.5.4.e, the dose or dose commitment to a MEMBER OF THE PUBLIC from radioactive materials in liquid effluents released, from each unit, to UNRESTRICTED AREAS shall be limited:

a. During any calendar quarter to less than or equal to 1.5 mrem to the total body and to less than or equal to 5 mrem to any organ, and

b. During any calendar year to less than or equal to 3 mrem to the total body and to less than or equal to 10 mrem to any organ.

2.1.3.1 Applicability

These limits apply at all times.

2.1.3.2 Actions

With the calculated dose from the release of radioactive materials in liquid effluents exceeding any of the limits of Section 2.1.3., prepare and submit to the Nuclear Regulatory Commission within 30 days a special report which identifies the cause(s) for exceeding the limit(s); defines the corrective actions to be taken to reduce the releases; and defines the proposed corrective actions to be taken to assure that subsequent releases will be in compliance with the limits of Section 2.1.3.

This control does not affect shutdown requirements or MODE changes.

2.1.3.3 Surveillance Requirements

At least once per 31 days, cumulative dose contributions from liquid effluents for the current calendar quarter and the current calendar year shall be determined, for each unit, in accordance with Section 2.4.

2.1.3.4 Basis

This control is provided to implement the requirements of Sections II.A, III.A and IV.A of Appendix I, 10 CFR Part 50. The limits stated in Section 2.1.3 implement the guides set forth in Section II.A of Appendix I. The ACTIONS stated in Section 2.1.3.2 provide the required operating flexibility and at the same time implement the guides set forth in Section IV.A of Appendix I to assure that the releases of radioactive material in liquid effluents will be kept "as low as is reasonably achievable." Also, for fresh water sites with drinking water supplies that can be potentially affected by plant operations, there is reasonable assurance that the operation of the facility will not result in radionuclide concentrations in the finished drinking water that are in excess of the requirements of 40 CFR Part 141. The dose calculations in Section 2.4 implement the requirements in Section III.A of Appendix I, which state that conformance with the guides of Appendix I be shown by calculational procedures based on models and data, such that the actual exposure of a MEMBER OF THE PUBLIC through appropriate pathways is unlikely to be substantially underestimated. The equations specified in Section 2.4 for calculating the doses due to the actual release rates of radioactive materials in liquid effluents are consistent with the

methodology provided in Regulatory Guide 1.109 (Reference 3) and Regulatory Guide 1.113 (Reference 6).

This control applies to the release of liquid effluents from each unit at the site. The liquid effluents from shared LIQUID RADWASTE TREATMENT SYSTEMs are to be proportioned between the units.

2.1.4 Liquid Radwaste Treatment System Control

In accordance with Technical Specification 5.5.4.f, the LIQUID RADWASTE TREATMENT SYSTEM shall be FUNCTIONAL. The appropriate portions of the system shall be used to reduce radioactivity in liquid wastes prior to their discharge when the projected doses due to the liquid effluent, from each unit, to UNRESTRICTED AREAS would exceed 0.06 mrem to the total body or 0.2 mrem to any organ of a MEMBER OF THE PUBLIC in 31 days.

2.1.4.1 Applicability

This limit applies at all times.

2.1.4.2 Actions

With radioactive liquid waste being discharged without treatment and in excess of the above limits and any portion of the LIQUID RADWASTE TREATMENT SYSTEM not in operation, prepare and submit to the Nuclear Regulatory Commission within 30 days a special report which includes the following information:

a. Explanation of why liquid radwaste was being discharged without treatment, identification of any NON-FUNCTIONAL equipment or subsystems and the reason for the NON-FUNCTIONALITY,

b. Action(s) taken to restore the NON-FUNCTIONAL equipment to FUNCTIONAL status, and

c. Summary description of action(s) taken to prevent a recurrence.

This control does not affect shutdown requirements or MODE changes.

2.1.4.3 Surveillance Requirements

Doses due to liquid releases to UNRESTRICTED AREAS shall be projected at least once per 31 days, in accordance with Section 2.5, during periods in which the LIQUID RADWASTE TREATMENT SYSTEMs are not being fully utilized.

The LIQUID RADWASTE TREATMENT SYSTEM shall be demonstrated FUNCTIONAL by meeting the controls of Sections 2.1.2 and 2.1.3.

2.1.4.4 Basis

The FUNCTIONALITY of the LIQUID RADWASTE TREATMENT SYSTEM ensures that this system will be available for use whenever liquid effluents require treatment prior to release to the UNRESTRICTED AREAS. The requirement that the appropriate portions of this system be used

when specified provides assurance that the releases of radioactive materials in liquid effluents will be kept "as low as is reasonably achievable." This control implements the requirements of 10 CFR Part 50.36a, General Design Criterion 60 of Appendix A to 10 CFR Part 50, and the design objective given in Section II.D of Appendix I to 10 CFR Part 50. The specified limits governing the use of appropriate portions of the LIQUID RADWASTE TREATMENT SYSTEM were specified as a suitable fraction of the dose design objectives set forth in Section II.A of Appendix I, 10 CFR Part 50, for liquid effluents.

This control applies to the release of radioactive materials in liquid effluents from each unit at the site. For units with shared radwaste systems, the liquid effluents from the shared system are to be proportioned among the units sharing that system.

2.1.5 Major Changes to Liquid Radioactive Waste Treatment Systems

Licensee initiated MAJOR CHANGES TO LIQUID RADIOACTIVE WASTE TREATMENT SYSTEMS:

a. Shall be reported to the Nuclear Regulatory Commission in the Radioactive Effluent Release Report for the period in which the change was implemented. The discussion of each change shall contain the information described in Section 7.2.2.7.

b. Shall become effective upon review and approval by the Vice President — Plant.

2.2 LIQUID RADWASTE TREATMENT SYSTEM

The Vogtle Electric Generating Plant is located on the west bank of the Savannah River approximately 151 river miles from the Atlantic Ocean. There are two pressurized water reactors on the site. Each unit is served by a separate LIQUID RADWASTE TREATMENT SYSTEM; however, certain components are shared between the two systems. Schematics of the LIQUID RADWASTE TREATMENT SYSTEMs are presented in Figure 2-1 and Figure 2-2. Liquid discharge pathways are shown in Figure 2-3.

All liquid radwastes treated by the LIQUID RADWASTE TREATMENT SYSTEM are collected in 5,000-gallon or 20,000-gallon waste monitor tanks. Releases from the waste monitor tanks are to the discharge line from the blowdown sump, and from there to the Savannah River. The blowdown sump also receives input from the waste water retention basins, turbine plant cooling water blowdown, and nuclear service cooling water blowdown. Additional dilution water is available from the cooling tower makeup water bypass line.

Although no significant quantities of radioactivity are expected in the nuclear service cooling water, the steam generator blowdown processing system, or the turbine building drain system, these effluent pathways are monitored as a precautionary measure. The monitors serving the latter two pathways provide for automatic termination of releases from these systems in the event that radio-activity is detected above predetermined levels. These two systems discharge to the waste water retention basin. Sampling and analysis of releases via all three of these pathways must be sufficient to ensure that the liquid effluent dose limits specified in the controls of Section 2.1.3 are not exceeded.

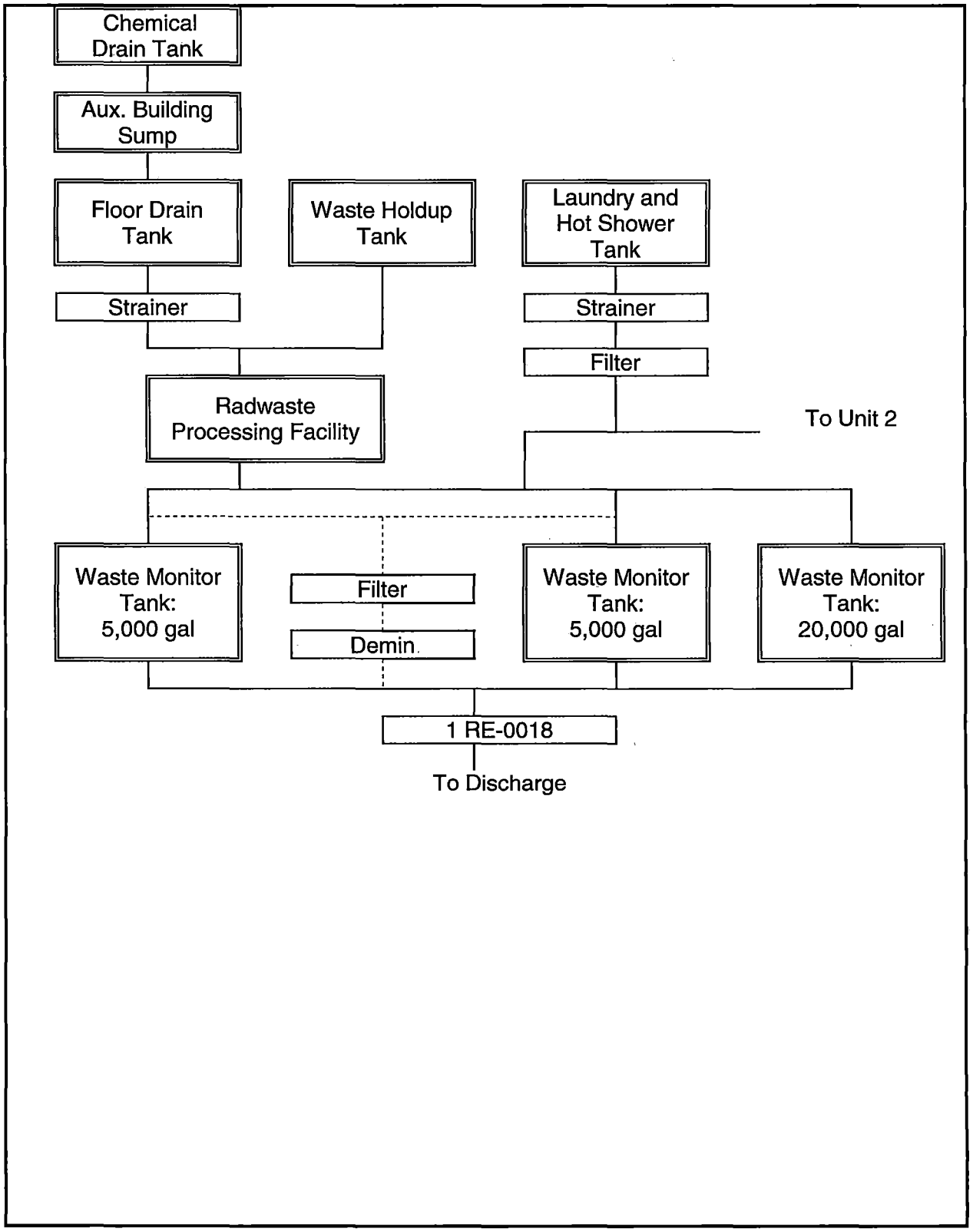

Figure 2-1. Unit 1 Liquid Radwaste Treatment System

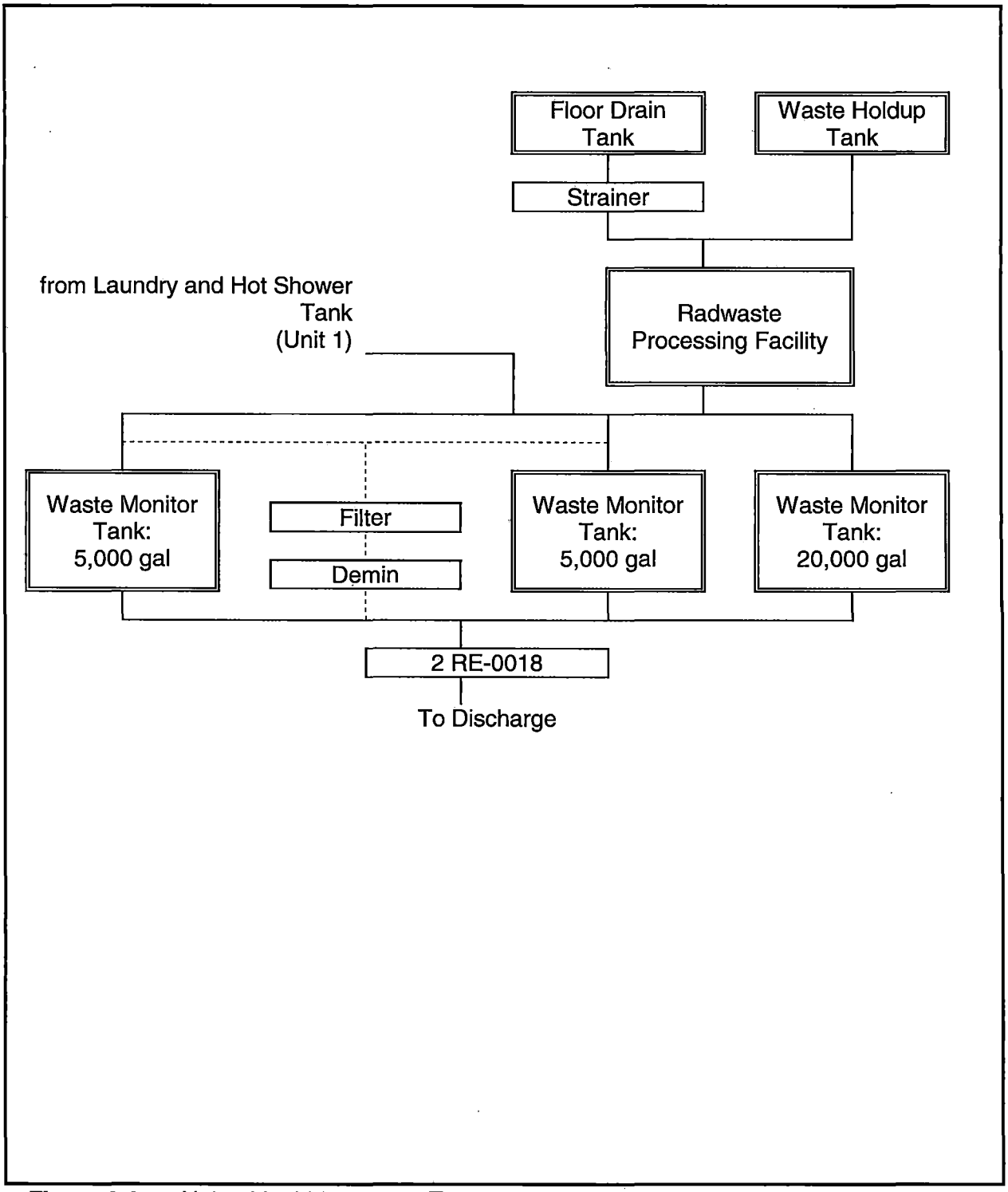

Figure 2-2. Unit 2 Liquid Radwaste Treatment System

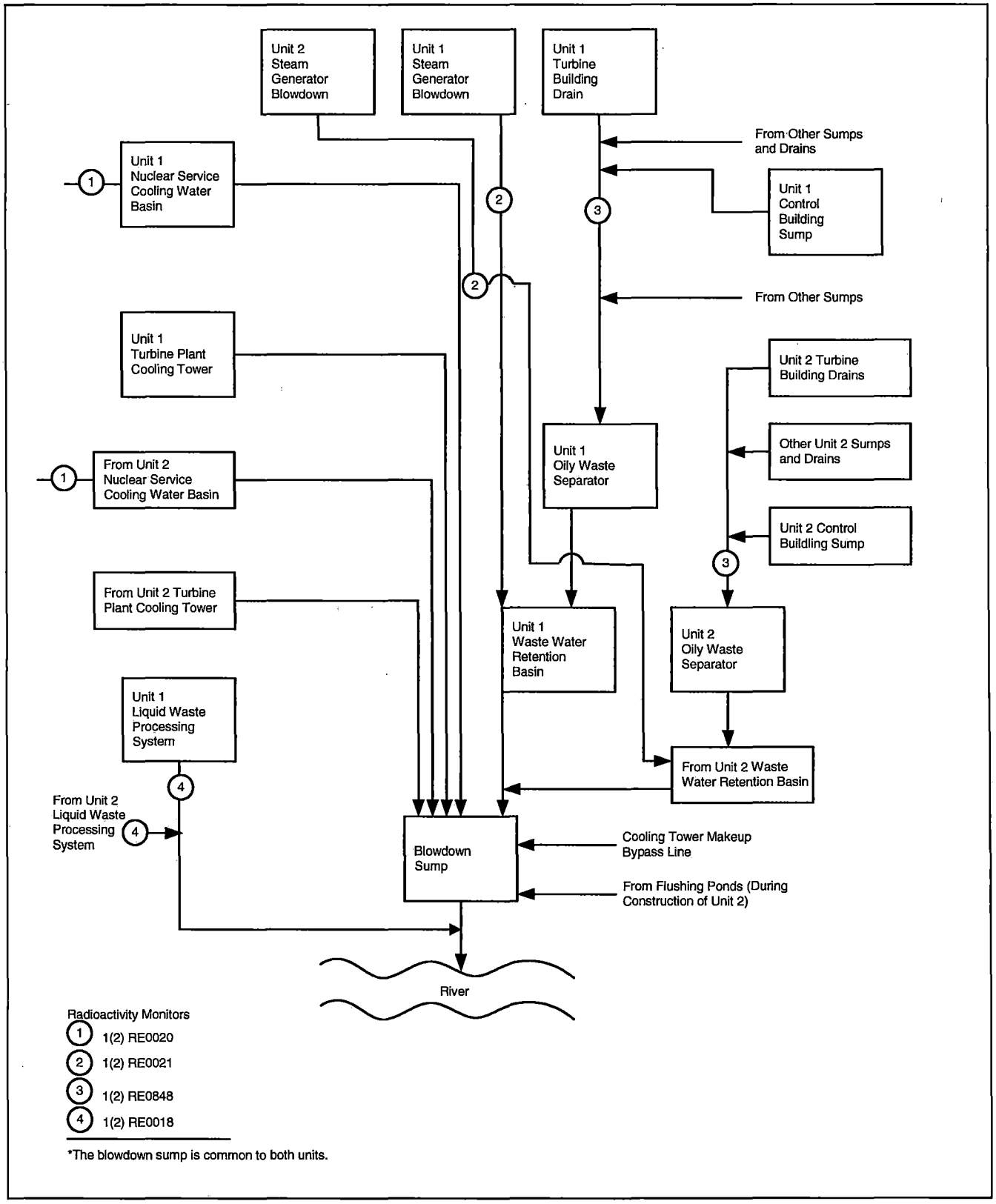

Figure 2-3. Liquid Radwaste Discharge Pathways

2.3 LIQUID EFFLUENT MONITOR SETPOINTS

2.3.1 General Provisions Regarding Setpoints

Liquid monitor setpoints calculated in accordance with the methodology presented in this section will be regarded as upper bounds for the actual high alarm setpoints. That is, a lower value for the high alarm setpoint may be established or retained on the monitor, if desired. Intermediate level setpoints should be established at an appropriate level to give sufficient warning prior to reaching the high alarm setpoint. If no release is planned for a particular pathway, or if there is no detectable activity in the planned release, the monitor setpoint should be established as close to background as practical to prevent spurious alarms, and yet alarm should an inadvertent release occur.

Two basic setpoint methodologies are presented below. For radwaste system discharge monitors, setpoints are determined to assure that the limits of Section 2.1.2 are not exceeded. For monitors on streams that are not expected to contain significant radioactivity, the purpose of the monitor setpoints is to cause an alarm on low levels of radioactivity, and to terminate the release where this is possible. Section 2.1.1 establishes the requirements for liquid effluent monitoring instrumentation. Table 2-4 lists the monitors for which each of the setpoint methodologies is applicable.

Table 2-4. Applicability of Liquid Monitor Setpoint Methodologies

Liquid Radwaste Discharge Monitors

Setpoint Method: Section 2.3.2

Release Type: BATCH

Unit 1 or Unit 2 Liquid Waste Treatment System Effluent
Monitor: 1RE-0018 / 2RE-0018

Normally Low-Radioactivity Streams with Termination or Diversion upon Alarm

Setpoint Method: Section 2.3.3

Release Type: CONTINUOUS

Unit 1 or Unit 2 Steam Generator Blowdown Effluent
Monitor: 1RE-0021 / 2RE-0021

Unit 1 or Unit 2 Turbine Building Drain Effluent
Monitor: 1RE-0848 / 2RE-0848

Normally Low-Radioactivity Streams with Alarm Only

Setpoint Method: Section 2.3.3

Release Type: CONTINUOUS

Unit 1 or Unit 2 Nuclear Service Cooling Water System Effluent
Monitors (2 per unit): 1RE-0020 A and B
2RE-0020 A and B

2.3.2 Setpoints for Radwaste System Discharge Monitors

2.3.2.1 Overview of Method

LIQUID RADWASTE TREATMENT SYSTEM effluent line radioactivity monitors are intended to provide alarm and automatic termination of release prior to exceeding the limits specified in Section 2.1.2 at the point of release of the diluted effluent into the UNRESTRICTED AREA. Therefore, their alarm/trip setpoints are established to ensure compliance with the following equation (equation adapted from Addendum to Reference 1):

$$\frac{c \cdot f}{F + f} \leq TF \cdot C_{ECL} \qquad \textbf{(2.1)}$$

where:

C_{ECL} = the Effluent Concentration Limit corresponding to the mix of radionuclides in the effluent being considered for discharge, in µCi/mL.

c = the setpoint, in µCi/mL, of the radioactivity monitor measuring the concentration of radioactivity in the effluent line prior to dilution and subsequent release. The setpoint represents a concentration which, if exceeded, could result in concentrations exceeding the limits of Section 2.1.2 in the UNRESTRICTED AREA.

f = the effluent flowrate at the location of the radioactivity monitor, in gpm.

F = the dilution stream flowrate which can be assured prior to the release point to the UNRESTRICTED AREA, in gpm. A predetermined dilution flowrate must be assured for use in the calculation of the radioactivity monitor setpoint.

TF = the tolerance factor selected to allow flexibility in the establishment of a practical monitor setpoint which could accommodate effluent releases at concentrations higher than the ECL values stated in 10 CFR 20, Appendix B, Table 2, Column 2; the tolerance factor must not exceed a value of 10.

While equation (2.1) shows the relationships of the critical parameters that determine the setpoint, it cannot be applied practically to a mixture of radionuclides with different Effluent Concentration Limits (ECLs). For a mixture of radionuclides, equation (2.1) is satisfied in a practicable manner based on the calculated ECL fraction of the radionuclide mixture and the dilution stream flowrate that can be assured for the duration of the release (F_d), by calculating the maximum permissible effluent flowrate (f_m) and the radioactivity monitor setpoint (c).

The setpoint method presented below is applicable to the release of only one tank of liquid radwaste per reactor unit at a given time. Liquid releases must be controlled administratively to ensure that this condition is met; otherwise, the setpoint method may not ensure that the limits of Section 2.1.2 are not exceeded.

2.3.2.2 Setpoint Calculation Steps

Step 1: Determine the radionuclide concentrations in the liquid waste being considered for release in accordance with the sampling and analysis requirements of Section 2.1.2.

All liquid radwastes treated by the LIQUID RADWASTE TREATMENT SYSTEM are collected in waste monitor tanks for sampling and analysis. The 5,000-gallon waste monitor tanks are recirculated for a minimum of 30 minutes, and the 20,000-gallon waste monitor tanks are recirculated for a minimum of 45 minutes. This mixing assures that a representative sample can be taken from the tank.

The total concentration of the liquid waste is determined by the results of all required analyses on the collected sample, as follows:

$$\sum_i C_i = C_a + \sum_s C_s + C_f + C_t + \sum_g C_g \qquad \textbf{(2.2)}$$

where:

C_a = the gross concentration of alpha emitters in the liquid waste, not less than that measured in the most recent applicable composite sample.

C_s = the concentration of strontium radioisotope s (Sr–89 or Sr–90) in the liquid waste, not less than that measured in the most recent applicable composite sample.

C_f = the concentration of Fe–55 in the liquid waste, not less than that measured in the most recent applicable composite sample.

C_t = the concentration of H–3 in the liquid waste, not less than that measured in the most recent applicable composite sample.

C_g = the concentration of gamma emitter g in the liquid waste as measured by gamma ray spectroscopy performed on the sample for the release under consideration.

The C_g term will be included in the analysis of each waste sample; terms for gross concentrations of alpha emitters, Sr-89, Sr-90, Fe-55, and tritium will be included in accordance with the sampling and analysis program required for the waste stream (see Section 2.1.2). For each analysis, only radionuclides identified and detected above background for the given measurement should be included in the calculation. When using the alternate setpoint methodology of step 5.b, the historical maximum values of C_a, C_s, C_f, and C_t shall be used.

Step 2: Determine the required dilution factor for the mix of radionuclides detected in the waste.

Measured radionuclide concentrations are used to calculate ECL fractions. The ECL fractions are used along with a safety factor to calculate the required dilution factor; this is the minimum ratio of dilution flowrate to waste flowrate that must be maintained throughout the release to ensure that the limits of Section 2.1.2 are not exceeded at the point of discharge into the UNRESTRICTED AREA. The required dilution factor, RDF, is calculated as the sum of the dilution factors required for gamma emitters (RDF_γ) and for non-gamma-emitters ($RDF_{n\gamma}$):

$$RDF = \left[\sum_i \frac{C_i}{ECL_i}\right] \div [(SF)(TF)]$$

$$= RDF_\gamma + RDF_{n\gamma} \tag{2.3}$$

$$RDF_\gamma = \frac{\left[\sum_g \frac{C_g}{ECL_g}\right]}{(SF)(TF)} \tag{2.4}$$

where:

$$RDF_{n\gamma} = \frac{\left[\frac{C_a}{ECL_a} + \sum_s \frac{C_s}{ECL_s} + \frac{C_f}{ECL_f} + \frac{C_t}{ECL_t}\right]}{(SF)(TF)} \tag{2.5}$$

C_i = the measured concentration of radionuclide i as defined in step 1, in μCi/mL. The C_a, C_s, C_f, and C_t terms will be included in the calculation as appropriate.

ECL_i = the Effluent Concentration Limit for radionuclide i from 10 CFR Part 20, Appendix B, Table 2, Column 2 (except for noble gases as discussed below). In the absence of information regarding the solubility classification of a given radionuclide in the waste stream, the solubility class with the lowest ECL shall be assumed. For dissolved or entrained noble gases, the concentration shall be limited to 1×10^{-4} μCi/mL. For gross alpha, the ECL shall be 2×10^{-9} μCi/mL; if specific alpha-emitting radionuclides are measured, the ECL for the specific radionuclide(s) should be used.

SF = the safety factor selected to compensate for statistical fluctuations and errors of measurement. The value for the safety factor must be between 0 and 1. A value of 0.5 is reasonable for liquid releases; a more precise value may be developed if desired.

TF = the tolerance factor (as defined in Section 2.3.2.1).

Step 3: Determine the release-specific assured dilution stream flowrate.

Determine the dilution stream flowrate that can be assured during the release period, designated F_d; this value is the setpoint for the dilution stream flowrate measurement device.

If simultaneous radioactive releases are planned from the same or different reactor units, the dilution stream must be allocated among all the simultaneous releases. There will only be one such release per unit at a given time, unless there is detectable radioactivity in one of the normally low-radioactivity streams (see Section 2.3.3). Allocation of the dilution stream to multiple release paths is accomplished as follows:

$$F_{dp} = F_d(AF_p) \tag{2.6}$$

where:

F_{dp} = the dilution flowrate allocated to release pathway p, in gpm.

AF_p = the dilution allocation factor for release pathway p. AF_p may be assigned any value between 0 and 1 for each active release pathway, under the condition that the sum of the AF_p for all active release pathways for the entire plant site does not exceed 1.

F_d = the assured minimum dilution flow for the unit, in gpm.

In the normal case in which the only release pathways with detectable radioactivity are the LIQUID RADWASTE TREATMENT SYSTEMs of each unit, AF_p for each unit may be assigned the value of 0.5 to permit releases from either unit to be made without regard to any releases from the other unit; if only one unit's LIQUID RADWASTE TREATMENT SYSTEM is releasing at a given time, its AF_p may be increased proportionately. If more precise allocation factor values are desired, they may be determined based on the relative radiological impact of each active release pathway; this may be approximated by multiplying the RDF of each effluent stream by its respective planned release flowrate, and comparing these values. If only one simultaneous release is being made, its AF_p may be assigned the value of 1, making F_{dp} equal to F_d.

For the case where RDF ≤ 1, the planned release meets the limits of Section 2.1.2 without dilution, and *could* be released with any desired effluent flowrate and dilution flowrate. However, in order to maintain individual doses due to liquid effluent releases as low as is reasonably achievable, no releases with detectable radioactivity *should* be made if the assured dilution flowrate, F_d, is less than 12,000 gpm.

Step 4: Determine the maximum allowable waste discharge flowrate.

For the case where RDF > 1, the maximum permissible effluent discharge flowrate for this release pathway, f_{mp} (in gpm), is calculated as follows:

$$f_{mp} = \frac{F_{dp}}{(RDF - 1)} \qquad \textbf{(2.7)}$$

For the case RDF ≤ 1, equation (2.7) is not valid. However, as discussed above, when RDF ≤ 1, the release may be made at full discharge pump capacity; the radioactivity monitor setpoint must still be calculated in accordance with Step 5 below.

NOTE 1: Discharge flowrates are actually limited by the discharge pump capacity. When the calculated maximum permissible release flowrate exceeds the pump capacity, the release may be made at full capacity. Discharge flowrates less than the pump capacity must be achieved by throttling if this is available; if throttling is not available, the release may not be made as planned.

NOTE 2: If, at the time of the planned release, there is detectable radioactivity due to plant operations in the dilution stream, the diluting capacity of the dilution stream is diminished. (In addition, sampling and analysis of the other radioactive effluents affecting the dilution stream must be sufficient to ensure that the liquid effluent dose limits specified in the controls of Section 2.1.3 are not exceeded.) Under these conditions, equation (2.7) must be modified to account for the radioactivity present in the dilution stream prior to the introduction of the planned release:

$$f_{mp} = \frac{F_{dp}}{(RDF - 1)}\left(1 - \sum_r \left[\frac{f_r}{F_d}\sum_i \left(\frac{C_{ir}}{ECL_i}\right)\right]\right) \quad \textbf{(2.8)}$$

where:

C_{ir} = the measured concentration of radionuclide i in release pathway r that is contributing to radioactivity in the dilution stream.

f_r = the effluent discharge flowrate of release pathway r.

If the entire dilution stream contains detectable activity due to plant operations, whether or not its source is identified, $f_r = F_d$, and C_{ir} is the concentration in the total dilution system. This note does not apply: a) if the RDF of the planned release is ≤ 1; or b) if the release contributing radioactivity to the dilution stream has been accounted for by the assignment of an allocation factor.

Step 5: Determine the maximum radioactivity monitor setpoint concentration.

Based on the values determined in previous steps, the radioactivity monitor setpoint for the planned release is calculated to ensure that the limits of Section 2.1.2 will not be exceeded. Because the radioactivity monitor responds primarily to gamma radiation, the monitor setpoint c_p for release pathway p (in μCi/mL) is based on the concentration of gamma emitters in the waste stream, as follows:

$$c_p = A_p \sum_g c_g \quad \textbf{(2.9)}$$

where:

A_p = an adjustment factor which will allow the setpoint to be established in a practical manner to prevent spurious alarms while allowing a margin between measured concentrations and the limits of Section 2.1.2.

Step 5.a. If the concentration of gamma emitters in the effluent to be released is sufficient that the high alarm setpoint can be established at a level that will prevent spurious alarms, A_p should be calculated as follows:

$$A_p = \frac{1}{RDF} \times ADF$$

$$= \frac{1}{RDF} \times \frac{(F_{dp} + f_{ap})}{f_{ap}} \quad \textbf{(2.10)}$$

where:

ADF = the assured dilution factor.

f_{ap} = the anticipated actual discharge flowrate for the planned release (in gpm), a value less than f_{mp}. The release must then be controlled so that the actual effluent discharge flowrate does not exceed f_{ap} at any time.

Step 5.b. Alternatively, A_p may be calculated as follows:

$$A_p = \frac{ADF - RDF_{n\gamma}}{RDF_{\gamma}} \quad \textbf{(2.11)}$$

Step 5.c. Evaluate the computed value of A_p as follows:

If $A_p \geq 1$, calculate the monitor setpoint, c_p. However, if c_p is within about 10 percent of C_g, it may be impractical to use this value of c_p. This situation indicates that measured concentrations are approaching values which would cause limits of Section 2.1.2 to be exceeded. Therefore, steps should be taken to reduce potential concentrations at the point of discharge; these steps may include decreasing the planned effluent discharge flowrate, increasing the dilution stream flowrate, postponing simultaneous releases, and/or decreasing the effluent concentrations by further processing the liquid planned for release. Alternatively, allocation factors for the active liquid release pathways may be reassigned. When one or more of these actions has been taken, repeat Steps 1–5 to calculate a new radioactivity monitor setpoint.

If $A_p < 1$, the release may not be made as planned. Consider the alternatives discussed in the paragraph above, and calculate a new setpoint based on the results of the actions taken.

2.3.2.3 Use of the Calculated Setpoint

The setpoint calculated above is in the units μCi/mL. The monitor actually measures a count rate, subtracts a predetermined background count rate, and multiplies by a calibration factor to convert from count rate to μCi/mL.

Initial calibration of the monitors by the manufacturer and Georgia Power Company utilized NIST-traceable liquid solutions with gamma ray emissions over the range 0.08 to 1.33 MeV, in the exact geometry of each production monitor. The calibration factor is a function of the radionuclide mix in the liquid to be released, and will be calculated for the monitor based on the results of the pre-release sample results from the laboratory gamma-ray spectrometer system. The mix-dependent calibration factor will be used as the gain factor in the PERMS monitor, or used to modify the calculated base monitor setpoint so that the default calibration factor in the PERMS monitor can be left unchanged.

Notwithstanding the initial calibration, monitor calibration data for conversion between count rate and concentration *may* include operational data obtained from determining the monitor response to stream concentrations measured by liquid sample analysis. In all cases, monitor background must be controlled so that the monitor is capable of responding to concentrations in the range of the setpoint value.

2.3.3 Setpoints for Monitors on Normally Low-Radioactivity Streams

Radioactivity in these streams (listed in Table 2-4 above) is expected to be at very low levels, generally below detection limits. Accordingly, the purpose of these monitors is to alarm upon the occurrence of significant radioactivity in these streams, and to terminate or divert the release where this is possible.

2.3.3.1 Normal Conditions

When radioactivity in one of these streams is at its normal low level, its radioactivity monitor setpoint should be established as close to background as practical to prevent spurious alarms, and yet alarm should an inadvertent release occur.

2.3.3.2 Conditions Requiring an Elevated Setpoint

Under the following conditions, radionuclide concentrations must be determined and an elevated radioactivity monitor setpoint determined for these pathways:

- For streams that can be diverted or isolated, a new monitor setpoint must be established when it is desired to discharge the stream directly to the dilution water even though the radioactivity in the stream exceeds the level which would normally be diverted or isolated.

- For streams that cannot be diverted or isolated, a new monitor setpoint must be established whenever: the radioactivity in the stream becomes detectable above the background levels of the applicable laboratory analyses; or the associated radioactivity monitor detects activity in the stream at levels above the established alarm setpoint.

When an elevated monitor setpoint is required for any of these effluent streams, it should be determined in the same manner as described in Section 2.3.2. However, special consideration must be given to Step 3. An allocation factor must be assigned to the normally low-radioactivity release pathway under consideration, and allocation factors for other release pathways discharging simultaneously must be adjusted downward (if necessary) to ensure that the sum of the allocation factors does not exceed 1. Sampling and analysis of the normally low-radioactivity streams must be sufficient to ensure that the liquid effluent dose limits specified in the controls of Section 2.1.3 are not exceeded.

2.4 LIQUID EFFLUENT DOSE CALCULATIONS

The following sub-sections present the methods required for liquid effluent dose calculations, in deepening levels of detail. Applicable site-specific pathways and parameter values for the calculation of D_τ, $A_{i\tau}$, and CF_{iv} are summarized in Table 2-5.

2.4.1 Calculation of Dose

The dose limits for a MEMBER OF THE PUBLIC specified in Section 2.1.3 are on a per-unit basis. Therefore, the doses calculated in accordance with this section must be determined and recorded on a per-unit basis, including apportionment of releases shared between the two units.

For the purpose of implementing Section 2.1.3, the dose to the maximum exposed individual due to radionuclides identified in liquid effluents released from each unit to UNRESTRICTED AREAS will be calculated as follows (equation from Reference 1, page 15):

$$D\tau = \sum_i A_{i\tau}\left[\sum_{l=1}^{m}(\Delta t_l C_{il} F_l)\right] \qquad \textbf{(2.12)}$$

where:

D_τ = the cumulative dose commitment to the total body or to any organ τ, in mrem, due to radioactivity in liquid effluents released during the total of the m time periods Δt_l.

$A_{i\tau}$ = the site-related adult ingestion dose commitment factor, for the total body or for any organ τ, due to identified radionuclide i, in (mrem·mL)/(h·µCi). Methods for the calculation of $A_{i\tau}$ are presented below in Section 2.4.2. The values of $A_{i\tau}$ to be used in dose calculations for releases from the plant site are listed in Table 2-8.

Δt_l = the length of time period *l*, over which C_{il} and F_l are averaged for liquid releases, in h.

C_{il} = the average concentration of radionuclide i in undiluted liquid effluent during time period *l*, in µCi/mL. Only radionuclides identified and detected above background in their respective samples should be included in the calculation.

F_l = the near-field average dilution factor in the receiving water of the UNRESTRICTED AREA:

$$F_l = \frac{f_t}{F_t \times Z} \qquad \textbf{(2.13)}$$

where:

f_t = the average undiluted liquid waste flowrate actually observed during the period of radioactivity release, in gpm.

F_t = the average dilution stream flowrate actually observed during the period of radioactivity release, in gpm. If simultaneous releases from both units occur,

the dilution stream flowrate F_t must be allocated between them. In such cases, F_l is unit-specific.

Z = the applicable dilution factor for the receiving water body, in the near field of the discharge structure, during the period of radioactivity release, from Table 2-5.

NOTE: In equation (2.13), the product (F_t x Z) is limited to 1000 cfs (= 448,000 gpm) or less. (Reference 1, Section 4.3.)

2.4.2 Calculation of $A_{i\tau}$

The site-related adult ingestion dose commitment factor, $A_{i\tau}$, is calculated as follows (equation adapted from Reference 1, page 16, by addition of the irrigated garden vegetation pathway):

$$A_{i\tau} = 1.14 \times 10^5 \left(\frac{U_w}{D_w} e^{-\lambda i t w} + U_f BF_i \, e^{-\lambda_i t_f} + U_v CF_{iv} \right) DF_{i\tau} \qquad \textbf{(2.14)}$$

where:

1.14×10^5 = a units conversion factor, determined by:

10^6 pCi/µCi x 10^3 mL/L ÷ 8760 h/y.

U_w = the adult drinking water consumption rate applicable to the plant site (L/y).

D_w = the dilution factor from the near field of the discharge structure for the plant site to the potable water intake location.

λ_i = the decay constant for radionuclide i (h^{-1}). Values of λ_i used in effluent calculations should be based on decay data from a recognized and current source, such as Reference 20.

t_w = the transit time from release to receptor for potable water consumption (h).

U_f = the adult rate of fish consumption applicable to the plant site (kg/y).

BF_i = the bioaccumulation factor for radionuclide i applicable to freshwater fish in the receiving water body for the plant site, in (pCi/kg)/(pCi/L) = (L/kg). For specific values applicable to the plant site, see Table 2-6.

t_f = the transit time from release to receptor for fish consumption (h).

U_v = the adult consumption rate for irrigated garden vegetation applicable to the plant site (kg/y).

CF_{iv} = the concentration factor for radionuclide i in irrigated garden vegetation, as applicable to the vicinity of the plant site, in (pCi/kg)/(pCi/L). Methods for calculation of CF_{iv} are presented below in Section 2.4.3.

$DF_{i\tau}$ = the dose conversion factor for radionuclide i for adults, in organ τ (mrem/pCi). For specific values, see Table 2-7.

2.4.3 Calculation of Cf_{iv}

The concentration factor for radionuclide i in irrigated garden vegetation, CF_{iv} in (L/kg), is calculated as follows:

- For radionuclides other than tritium (equation adapted from Reference 3, equations A–8 and A–9):

$$CF_{iv} = M \cdot I \left[\frac{r\left(1 - e^{-\lambda_{Ei} t_e}\right)}{Y_v \lambda_{Ei}} + \frac{f_I B_{iv}\left(1 - e^{-\lambda_i t_b}\right)}{P \lambda_i} \right] e^{-\lambda_i t_h} \qquad \textbf{(2.15)}$$

- For tritium (equation adapted from Reference 3, equations A–9 and A–10):

$$CF_{iv} = M \cdot L_v \qquad \textbf{(2.16)}$$

where:

M = the additional river dilution factor from the near field of the discharge structure for the plant site to the point of irrigation water usage.

I = the average irrigation rate during the growing season (L)/(m^2·h).

r = the fraction of irrigation-deposited activity retained on the edible portions of leafy garden vegetation.

Y_v = the areal density (agricultural productivity) of leafy garden vegetation (kg/m^2)

f_I = the fraction of the year that garden vegetation is irrigated.

B_{iv} = the crop to soil concentration factor applicable to radionuclide i (pCi/kg garden vegetation)/(pCi/kg soil).

P = the effective surface density of soil (kg/m^2).

λ_i = the decay constant for radionuclide i (h^{-1}). Values of λ_i used in effluent calculations should be based on decay data from a recognized and current source, such as Reference 20.

λ_w = the rate constant for removal of activity from plant leaves by weathering (h^{-1}).

λ_{Ei} = the effective removal rate for activity deposited on crop leaves (h^{-1}) calculated as: $\lambda_{Ei} = \lambda_i + \lambda_w$.

t_e = the period of leafy garden vegetation exposure during the growing season (h).

t_b = the period of long-term buildup of activity in soil (h).

t_h = the time between harvest of garden vegetation and human consumption (h).

L_v = the water content of leafy garden vegetation edible parts (L/kg).

Table 2-5. Parameters for Calculation of Doses Due to Liquid Effluent Releases

Dose Calculation Receptor Locations:

Fish: Vicinity of plant discharge

Drinking Water: 112 miles downstream, at Beaufort, SC (Reference 12)

Irrigated Garden Vegetation: None (Reference 12)

Numerical Parameters:

Parameter	Value	Reference
Z	10, for May through December 20, for January through April	Ref. 11
U_w	730 L/y	Ref 3
D_w	8	Ref. 7
t_w	48 h	Ref. 3, Sec. A.2; Ref. 8
U_f	21 kg/y	Ref. 3, Table E-5
t_f	24 h	Ref. 3, Sec. A.2
U_v	0 kg/y *	Ref. 12
M	1.0 +	
I	No value **	
r	0.25	Ref. 3, Table E-15.
Y_v	2.0 kg/m^2	Ref. 3, Table E-15
f_I	1.0 +	
P	240 kg/m^2	Ref. 3, Table E-15
λ_w	0.0021 h^{-1} (i.e., half-life of 14 d)	Ref. 3, Table E-15
t_e	1440 h (= 60 d)	Ref. 3, Table E-15
t_b	1.31 x 10^5 h (= 15 y)	Ref. 3, Table E-15
t_h	24 h	Ref. 3, Table E-15
L_v	0.92 L/kg	Based on Ref. 21, Table 5.16 (for lettuce, cabbage, etc.)

* - Because there is no irrigated garden vegetation pathway downstream of the plant site, the consumption of irrigated garden vegetation is set to zero, and the other pathway parameters are defaults.

\+ - There is no established default value for this parameter. The most conservative physically realistic value is 1.0.

Table 2-6. Element Transfer Factors

Element	Freshwater Fish BF_i^*
H	9.0 E-01
C	4.6 E+03
Na	1.0 E+02
P	3.0 E+03
Cr	2.0 E+02
Mn	4.0 E+02
Fe	1.0 E+02
Co	5.0 E+01
Ni	1.0 E+02
Cu	5.0 E+01
Zn	2.0 E+03
Br	4.2 E+02
Rb	2.0 E+03
Sr	3.0 E+01
Y	2.5 E+01
Zr	3.3 E+00
Nb	5.5 E+02
Mo	1.0 E+01
Tc	1.5 E+01
Ru	1.0 E+01
Rh	1.0 E+01
Ag	2.3 E+00
Sb	2.0 E+02
Te	4.0 E+02
I	1.5 E+01
Cs	2.0 E+03
Ba	4.0 E+00
La	2.5 E+01
Ce	1.0 E+00
Pr	2.5 E+01
Nd	2.5 E+01
W	1.2 E+03
Np	1.0 E+01

* - Bioaccumulation Factors for freshwater fish, in (pCi/kg)/(pCi/L). They are obtained from Reference 3 (Table A-1), except as follows: Reference 9 for P; Reference 2 (Table A-8) for Ag; and Reference 10 for Nb and Sb.

Table 2-7. Adult Ingestion Dose Factors

Nuclide	Bone	Liver	T. Body	Thyroid	Kidney	Lung	GI-LLI
H-3	No Data	1.05E-07	1.05E-07	1.05E-07	1.05E-07	1.05E-07	1.05E-07
C-14	2.84E-06	5.68E-07	5.68E-07	5.68E-07	5.68E-07	5.68E-07	5.68E-07
Na-24	1.70E-06	1.70E-06	1.70E-06	1.70E-06	1.70E-06	1.70E-06	1.70E-06
P-32	1.93E-04	1.20E-05	7.46E-06	No Data	No Data	No Data	2.17E-05
Cr-51	No Data	No Data	2.66E-09	1.59E-09	5.86E-10	3.53E-09	6.69E-07
Mn-54	No Data	4.57E-06	8.72E-07	No Data	1.36E-06	No Data	1.40E-05
Mn-56	No Data	1.15E-07	2.04E-08	No Data	1.46E-07	No Data	3.67E-06
Fe-55	2.75E-06	1.90E-06	4.43E-07	No Data	No Data	1.06E-06	1.09E-06
Fe-59	4.34E-06	1.02E-05	3.91E-06	No Data	No Data	2.85E-06	3.40E-05
Co-58	No Data	7.45E-07	1.67E-06	No Data	No Data	No Data	1.51E-05
Co-60	No Data	2.14E-06	4.72E-06	No Data	No Data	No Data	4.02E-05
Ni-63	1.30E-04	9.01E-06	4.36E-06	No Data	No Data	No Data	1.88E-06
Ni-65	5.28E-07	6.86E-08	3.13E-08	No Data	No Data	No Data	1.74E-06
Cu-64	No Data	8.33E-08	3.91E-08	No Data	2.10E-07	No Data	7.10E-06
Zn-65	4.84E-06	1.54E-05	6.96E-06	No Data	1.03E-05	No Data	9.70E-06
Zn-69	1.03E-08	1.97E-08	1.37E-09	No Data	1.28E-08	No Data	2.96E-09
Br-83	No Data	No Data	4.02E-08	No Data	No Data	No Data	5.79E-08
Br-84	No Data	No Data	5.21E-08	No Data	No Data	No Data	4.09E-13
Br-85	No Data	No Data	2.14E-09	No Data	No Data	No Data	No Data
Rb-86	No Data	2.11E-05	9.83E-06	No Data	No Data	No Data	4.16E-06
Rb-88	No Data	6.05E-08	3.21E-08	No Data	No Data	No Data	8.36E-19
Rb-89	No Data	4.01E-08	2.82E-08	No Data	No Data	No Data	2.33E-21
Sr-89	3.08E-04	No Data	8.84E-06	No Data	No Data	No Data	4.94E-05
Sr-90	7.58E-03	No Data	1.86E-03	No Data	No Data	No Data	2.19E-04
Sr-91	5.67E-06	No Data	2.29E-07	No Data	No Data	No Data	2.70E-05

All values are in (mrem/pCi ingested). They are obtained from Reference 3 (Table E-11), except as follows: Reference 2 (Table A–3) for Rh-105, Sb-124, and Sb-125.

Table 2-7 (contd). Adult Ingestion Dose Factors

Nuclide	Bone	Liver	T.Body	Thyroid	Kidney	Lung	GI-LLI
Sr-92	2.15E-06	No Data	9.30E-08	No Data	No Data	No Data	4.26E-05
Y-90	9.62E-09	No Data	2.58E-10	No Data	No Data	No Data	1.02E-04
Y-91m	9.09E-11	No Data	3.52E-12	No Data	No Data	No Data	2.67E-10
Y-91	1.41E-07	No Data	3.77E-09	No Data	No Data	No Data	7.76E-05
Y-92	8.45E-10	No Data	2.47E-11	No Data	No Data	No Data	1.48E-05
Y-93	2.68E-09	No Data	7.40E-11	No Data	No Data	No Data	8.50E-05
Zr-95	3.04E-08	9.75E-09	6.60E-09	No Data	1.53E-08	No Data	3.09E-05
Zr-97	1.68E-09	3.39E-10	1.55E-10	No Data	5.12E-10	No Data	1.05E-04
Nb-95	6.22E-09	3.46E-09	1.86E-09	No Data	3.42E-09	No Data	2.10E-05
Mo-99	No Data	4.31E-06	8.20E-07	No Data	9.76E-06	No Data	9.99E-06
Tc-99m	2.47E-10	6.98E-10	8.89E-09	No Data	1.06E-08	3.42E-10	4.13E-07
Tc-101	2.54E-10	3.66E-10	3.59E-09	No Data	6.59E-09	1.87E-10	1.10E-21
Ru-103	1.85E-07	No Data	7.97E-08	No Data	7.06E-07	No Data	2.16E-05
Ru-105	1.54E-08	No Data	6.08E-09	No Data	1.99E-07	No Data	9.42E-06
Ru-106	2.75E-06	No Data	3.48E-07	No Data	5.31E-06	No Data	1.78E-04
Rh-105	1.22E-07	8.86E-08	5.83E-08	No Data	3.76E-07	No Data	1.41E-05
Ag-110m	1.60E-07	1.48E-07	8.79E-08	No Data	2.91E-07	No Data	6.04E-05
Sb-124	2.81E-06	5.30E-08	1.11E-06	6.79E-09	No Data	2.18E-06	7.95E-05
Sb-125	2.23E-06	2.40E-08	4.48E-07	1.98E-09	No Data	2.33E-04	1.97E-05
Te-125m	2.68E-06	9.71E-07	3.59E-07	8.06E-07	1.09E-05	No Data	1.07E-05
Te-127m	6.77E-06	2.42E-06	8.25E-07	1.73E-06	2.75E-05	No Data	2.27E-05
Te-127	1.10E-07	3.95E-08	2.38E-08	8.15E-08	4.48E-07	No Data	8.68E-06
Te-129m	1.15E-05	4.29E-06	1.82E-06	3.95E-06	4.80E-05	No Data	5.79E-05
Te-129	3.14E-08	1.18E-08	7.65E-09	2.41E-08	1.32E-07	No Data	2.37E-08
Te-131m	1.73E-06	8.46E-07	7.05E-07	1.34E-06	8.57E-06	No Data	8.40E-05
Te-131	1.97E-08	8.23E-09	6.22E-09	1.62E-08	8.63E-08	No Data	2.79E-09

Table 2-7 (contd). Adult Ingestion Dose Factors

Nuclide	Bone	Liver	T.Body	Thyroid	Kidney	Lung	GI-LLI
Te-132	2.52E-06	1.63E-06	1.53E-06	1.80E-06	1.57E-05	No Data	7.71E-05
I-130	7.56E-07	2.23E-06	8.80E-07	1.89E-04	3.48E-06	No Data	1.92E-06
I-131	4.16E-06	5.95E-06	3.41E-06	1.95E-03	1.02E-05	No Data	1.57E-06
I-132	2.03E-07	5.43E-07	1.90E-07	1.90E-05	8.65E-07	No Data	1.02E-07
I-133	1.42E-06	2.47E-06	7.53E-07	3.63E-04	4.31E-06	No Data	2.22E-06
I-134	1.06E-07	2.88E-07	1.03E-07	4.99E-06	4.58E-07	No Data	2.51E-10
I-135	4.43E-07	1.16E-06	4.28E-07	7.65E-05	1.86E-06	No Data	1.31E-06
Cs-134	6.22E-05	1.48E-04	1.21E-04	No Data	4.79E-05	1.59E-05	2.59E-06
Cs-136	6.51E-06	2.57E-05	1.85E-05	No Data	1.43E-05	1.96E-06	2.92E-06
Cs-137	7.97E-05	1.09E-04	7.14E-05	No Data	3.70E-05	1.23E-05	2.11E-06
Cs-138	5.52E-08	1.09E-07	5.40E-08	No Data	8.01E-08	7.91E-09	4.65E-13
Ba-139	9.70E-08	6.91E-11	2.84E-09	No Data	6.46E-11	3.92E-11	1.72E-07
Ba-140	2.03E-05	2.55E-08	1.33E-06	No Data	8.67E-09	1.46E-08	4.18E-05
Ba-141	4.71E-08	3.56E-11	1.59E-09	No Data	3.31E-11	2.02E-11	2.22E-17
Ba-142	2.13E-08	2.19E-11	1.34E-09	No Data	1.85E-11	1.24E-11	3.00E-26
La-140	2.50E-09	1.26E-09	3.33E-10	No Data	No Data	No Data	9.25E-05
La-142	1.28E-10	5.82E-11	1.45E-11	No Data	No Data	No Data	4.25E-07
Ce-141	9.36E-09	6.33E-09	7.18E-10	No Data	2.94E-09	No Data	2.42E-05
Ce-143	1.65E-09	1.22E-06	1.35E-10	No Data	5.37E-10	No Data	4.56E-05
Ce-144	4.88E-07	2.04E-07	2.62E-08	No Data	1.21E-07	No Data	1.65E-04
Pr-143	9.20E-09	3.69E-09	4.56E-10	No Data	2.13E-09	No Data	4.03E-05
Pr-144	3.01E-11	1.25E-11	1.53E-12	No Data	7.05E-12	No Data	4.33E-18
Nd-147	6.29E-09	7.27E-09	4.35E-10	No Data	4.25E-09	No Data	3.49E-05
W-187	1.03E-07	8.61E-08	3.01E-08	No Data	No Data	No Data	2.82E-05
Np-239	1.19E-09	1.17E-10	6.45E-11	No Data	3.65E-10	No Data	2.40E-05

Table 2-8. Site-Related Ingestion Dose Factors, $A_{i\tau}$

Nuclide	Bone	Liver	T. Body	Thyroid	Kidney	Lung	GI-LLI
H-3	0.00	1.32E+00	1.32E+00	1.32E+00	1.32E+00	1.32E+00	1.32E+00
C-14	3.13E+04	6.26E+03	6.26E+03	6.26E+03	6.26E+03	6.26E+03	6.26E+03
Na-24	1.36E+02	1.36E+02	1.36E+02	1.36E+02	1.36E+02	1.36E+02	1.36E+02
P-32	1.32E+06	8.22E+04	5.11E+04	0.00	0.00	0.00	1.49E+05
Cr-51	0.00	0.00	1.27E+00	7.58E-01	2.79E-01	1.68E+00	3.19E+02
Mn-54	0.00	4.41E+03	8.42E+02	0.00	1.31E+03	0.00	1.35E+04
Mn-56	0.00	1.74E-01	3.08E-02	0.00	2.21E-01	0.00	5.55E+00
Fe-55	6.86E+02	4.74E+02	1.11E+02	0.00	0.00	2.65E+02	2.72E+02
Fe-59	1.07E+03	2.51E+03	9.61E+02	0.00	0.00	7.01E+02	8.36E+03
Co-58	0.00	9.59E+01	2.15E+02	0.00	0.00	0.00	1.94E+03
Co-60	0.00	2.78E+02	6.14E+02	0.00	0.00	0.00	5.23E+03
Ni-63	3.25E+04	2.25E+03	1.09E+03	0.00	0.00	0.00	4.70E+02
Ni-65	1.72E-01	2.23E-02	1.02E-02	0.00	0.00	0.00	5.66E-01
Cu-64	0.00	2.75E+00	1.29E+00	0.00	6.94E+00	0.00	2.35E+02
Zn-65	2.32E+04	7.37E+04	3.33E+04	0.00	4.93E+04	0.00	4.64E+04
Zn-69	7.88E-07	1.51E-06	1.05E-07	0.00	9.79E-07	0.00	2.26E-07
Br-83	0.00	0.00	3.83E-02	0.00	0.00	0.00	5.52E-02
Br-84	0.00	0.00	1.22E-12	0.00	0.00	0.00	9.61E-18
Br-85	0.00	0.00	0.00	0.00	0.00	0.00	0.00
Rb-86	0.00	9.75E+04	4.54E+04	0.00	0.00	0.00	1.92E+04
Rb-88	0.00	1.29E-22	6.82E-23	0.00	0.00	0.00	1.78E-33
Rb-89	0.00	1.61E-26	1.14E-26	0.00	0.00	0.00	0.00
Sr-89	2.49E+04	0.00	7.16E+02	0.00	0.00	0.00	4.00E+03
Sr-90	6.23E+05	0.00	1.53E+05	0.00	0.00	0.00	1.80E+04
Sr-91	7.25E+01	0.00	2.93E+00	0.00	0.00	0.00	3.45E+02
Sr-92	3.33E-01	0.00	1.44E-02	0.00	0.00	0.00	6.60E+00
Y-90	5.04E-01	0.00	1.35E-02	0.00	0.00	0.00	5.34E+03
Y-91m	1.04E-11	0.00	4.01E-13	0.00	0.00	0.00	3.04E-11
Y-91	9.77E+00	0.00	2.61E-01	0.00	0.00	0.00	5.38E+03
Y-92	4.61E-04	0.00	1.35E-05	0.00	0.00	0.00	8.07E+00
Y-93	3.19E-02	0.00	8.82E-04	0.00	0.00	0.00	1.01E+03
Zr-95	5.47E-01	1.75E-01	1.19E-01	0.00	2.75E-01	0.00	5.56E+02
Zr-97	7.40E-03	1.49E-03	6.83E-04	0.00	2.26E-03	0.00	4.62E+02
Nb-95	8.09E+00	4.50E+00	2.42E+00	0.00	4.45E+00	0.00	2.73E+04
Mo-99	0.00	1.07E+02	2.04E+01	0.00	2.43E+02	0.00	2.49E+02
Tc-99m	5.70E-04	1.61E-03	2.05E-02	0.00	2.44E-02	7.89E-04	9.53E-01

All values are in (mrem·mL)/(h·μCi). They are calculated using equation (2.14), and data from Table 2-5, Table 2-6, and Table 2-7. When "No Data" is shown for a radionuclide-organ combination in Table 2-7, $A_{i\tau}$ factors in this table are presented as zero.

Table 2-8 (contd). Site-Related Ingestion Dose Factors, $A_{i\tau}$

Nuclide	Bone	Liver	T. Body	Thyroid	Kidney	Lung	GI-LLI
Tc-101	2.71E-33	3.91E-33	3.83E-32	0.00	7.03E-32	2.00E-33	0.00
Ru-103	6.21E+00	0.00	2.68E+00	0.00	2.37E+01	0.00	7.25E+02
Ru-105	8.79E-03	0.00	3.47E-03	0.00	1.14E-01	0.00	5.38E+00
Ru-106	9.42E+01	0.00	1.19E+01	0.00	1.82E+02	0.00	6.10E+03
Rh-105	2.32E+00	1.69E+00	1.11E+00	0.00	7.15E+00	0.00	2.68E+02
Ag-110m	2.53E+00	2.34E+00	1.39E+00	0.00	4.61E+00	0.00	9.56E+02
Sb-124	1.36E+03	2.56E+01	5.37E+02	3.28E+00	0.00	1.05E+03	3.84E+04
Sb-125	1.09E+03	1.17E+01	2.19E+02	9.68E-01	0.00	1.14E+05	9.63E+03
Te-125m	2.56E+03	9.29E+02	3.43E+02	7.71E+02	1.04E+04	0.00	1.02E+04
Te-127m	6.51E+03	2.33E+03	7.93E+02	1.66E+03	2.64E+04	0.00	2.18E+04
Te-127	1.78E+01	6.40E+00	3.85E+00	1.32E+01	7.25E+01	0.00	1.41E+03
Te-129m	1.09E+04	4.07E+03	1.73E+03	3.74E+03	4.55E+04	0.00	5.49E+04
Te-129	1.78E-05	6.68E-06	4.33E-06	1.36E-05	7.47E-05	0.00	1.34E-05
Te-131m	9.57E+02	4.68E+02	3.90E+02	7.42E+02	4.74E+03	0.00	4.65E+04
Te-131	8.64E-17	3.61E-17	2.73E-17	7.10E-17	3.78E-16	0.00	1.22E-17
Te-132	1.97E+03	1.27E+03	1.19E+03	1.41E+03	1.23E+04	0.00	6.02E+04
I-130	7.60E+00	2.24E+01	8.85E+00	1.90E+03	3.50E+01	0.00	1.93E+01
I-131	1.73E+02	2.48E+02	1.42E+02	8.13E+04	4.25E+02	0.00	6.55E+01
I-132	5.27E-03	1.41E-02	4.93E-03	4.93E-01	2.24E-02	0.00	2.65E-03
I-133	2.59E+01	4.51E+01	1.37E+01	6.62E+03	7.86E+01	0.00	4.05E+01
I-134	2.18E-08	5.94E-08	2.12E-08	1.03E-06	9.44E-08	0.00	5.17E-11
I-135	1.31E+00	3.44E+00	1.27E+00	2.27E+02	5.52E+00	0.00	3.89E+00
Cs-134	2.98E+05	7.10E+05	5.80E+05	0.00	2.30E+05	7.62E+04	1.24E+04
Cs-136	2.96E+04	1.17E+05	8.42E+04	0.00	6.51E+04	8.92E+03	1.33E+04
Cs-137	3.82E+05	5.23E+05	3.43E+05	0.00	1.78E+05	5.90E+04	1.01E+04
Cs-138	9.12E-12	1.80E-11	8.92E-12	0.00	1.32E-11	1.31E-12	7.68E-17
Ba-139	5.64E-06	4.02E-09	1.65E-07	0.00	3.76E-09	2.28E-09	1.00E-05
Ba-140	3.74E+02	4.69E-01	2.45E+01	0.00	1.60E-01	2.69E-01	7.69E+02
Ba-141	8.47E-25	6.40E-28	2.86E-26	0.00	5.95E-28	3.63E-28	3.99E-34
Ba-142	0.00	0.00	0.00	0.00	0.00	0.00	0.00
La-140	1.10E-01	5.56E-02	1.47E-02	0.00	0.00	0.00	4.08E+03
La-142	2.19E-07	9.96E-08	2.48E-08	0.00	0.00	0.00	7.27E-04
Ce-141	1.15E-01	7.79E-02	8.84E-03	0.00	3.62E-02	0.00	2.98E+02
Ce-143	8.65E-03	6.39E+00	7.08E-04	0.00	2.81E-03	0.00	2.39E+02
Ce-144	6.22E+00	2.60E+00	3.34E-01	0.00	1.54E+00	0.00	2.10E+03
Pr-143	6.10E-01	2.44E-01	3.02E-02	0.00	1.41E-01	0.00	2.67E+03
Pr-144	1.48E-28	6.14E-29	7.51E-30	0.00	3.46E-29	0.00	2.13E-35
Nd-147	4.11E-01	4.75E-01	2.84E-02	0.00	2.78E-01	0.00	2.28E+03
W-187	1.47E+02	1.23E+02	4.31E+01	0.00	0.00	0.00	4.04E+04
Np-239	2.81E-02	2.76E-03	1.52E-03	0.00	8.62E-03	0.00	5.67E+02

2.5 LIQUID EFFLUENT DOSE PROJECTIONS

2.5.1 Thirty-One Day Dose Projections

In order to meet the requirements for operation of the LIQUID RADWASTE TREATMENT SYSTEM (see Section 2.1.4), dose projections must be made at least once each 31 days; this applies during periods in which a discharge to UNRESTRICTED AREAS of liquid effluents containing radioactive materials occurs or is expected.

Projected 31-day doses to individuals due to liquid effluents may be determined as follows:

$$D_{\tau p} = \left(\frac{D_{\tau c}}{t}\right) \times 31 + D_{\tau a} \qquad \textbf{(2.17)}$$

where:

$D_{\tau p}$ = the projected dose to the total body or organ τ, for the next 31 days of liquid releases.

$D_{\tau c}$ = the cumulative dose to the total body or organ τ, for liquid releases that have occurred in the elapsed portion of the current quarter, plus the release under consideration.

t = the number of whole or partial days elapsed into the current quarter, including the time to the end of the release under consideration (even if the release continues into the next quarter).

$D_{\tau a}$ = the anticipated dose contribution to the total body or any organ τ, due to any planned activities during the next 31-day period, if those activities will result in liquid releases that are in addition to routine liquid effluents. If only routine liquid effluents are anticipated, $D_{\tau a}$ may be set to zero.

2.5.2 Dose Projections for Specific Releases

Dose projections may be performed for a particular release by performing a prerelease dose calculation assuming that the planned release will proceed as anticipated. For individual dose projections due to liquid releases, follow the methodology of Section 2.4, using sample analysis results for the source to be released, and parameter values expected to exist during the release period.

2.6 DEFINITIONS OF LIQUID EFFLUENT TERMS

The following symbolic terms are used in the presentation of liquid effluent calculations in the subsections above.

Term	Definition	Section of Initial Use
A_p =	the adjustment factor used in calculating the effluent monitor setpoint for liquid release pathway p: the ratio of the assured dilution to the required dilution [unitless].	2.3.2.2
ADF =	the assured dilution factor for a planned release [unitless].	2.3.2.2
AF_p =	the dilution allocation factor for liquid release pathway p [unitless].	2.3.2.2
$A_{i\tau}$ =	the site-related adult ingestion dose commitment factor, for the total body or for any organ τ, due to identified radionuclide i [(mrem · mL)/(h · μCi)]. The values of $A_{i\tau}$ are listed in Table 2-8.	2.4.1
B_{iv} =	the crop to soil concentration factor applicable to radionuclide i, [(pCi/kg garden vegetation)/(pCi/kg soil)].	2.4.3
BF_i =	the bioaccumulation factor for radionuclide i for freshwater fish [(pCi/kg)/(pCi/L)]. Values are listed in Table 2-6.	2.4.2
c =	the setpoint of the radioactivity monitor measuring the concentration of radioactivity in the effluent line, prior to dilution and subsequent release [μCi/mL].	2.3.2.1
c_p =	the calculated effluent radioactivity monitor setpoint for liquid release pathway p [μCi/mL].	2.3.2.2
C_a =	the gross concentration of alpha emitters in the liquid waste as measured in the applicable composite sample [μCi/mL].	2.3.2.2
C_{ECL} =	the Effluent Concentration Limit stated in 10 CFR 20, Appendix B, Table 2, Column 2 [μCi/mL].	2.3.2.1
C_f =	the concentration of Fe–55 in the liquid waste as measured in the applicable composite sample [μCi/mL].	2.3.2.2

Term	Definition	Section of Initial Use
C_g =	the concentration of gamma emitter g in the liquid waste as measured by gamma ray spectroscopy performed on the applicable prerelease waste sample [μCi/mL].	2.3.2.2
C_i =	the measured concentration of radionuclide i in a sample of liquid effluent [μCi/mL].	2.3.2.2
C_{il} =	the average concentration of radionuclide i in undiluted liquid effluent during time period *l* [μCi/mL].	2.4.1
C_{ir} =	the measured concentration of radionuclide i in release pathway r that is contributing to radioactivity in the dilution stream [μCi/mL].	2.3.2.2
C_s =	the concentration of strontium radioisotope s (Sr–89 or Sr-90) in the liquid waste as measured in the applicable composite sample [μCi/mL].	2.3.2.2
C_t =	the concentration of H–3 in the liquid waste as measured in the applicable composite sample [μCi/mL].	2.3.2.2
CF_{iv} =	the concentration factor for radionuclide i in irrigated garden vegetation [(pCi/kg)/(pCi/L)].	2.4.2
D_w =	the dilution factor from the near field of the discharge structure to the potable water intake location [unitless].	2.4.2
D_τ =	the cumulative dose commitment to the total body or to any organ τ, due to radioactivity in liquid effluents released during a given time period [mrem].	2.4.1
$D_{\tau a}$ =	the anticipated dose contribution to the total body or any organ τ, due to any planned activities during the next 31-day period [mrem].	2.5.1
$D_{\tau c}$ =	the cumulative dose to the total body or organ τ, for liquid releases that have occurred in the elapsed portion of the current quarter, plus the release under consideration [mrem].	2.5.1
$D_{\tau p}$ =	the projected dose to the total body or organ τ, for the next 31 days of liquid releases [mrem].	2.5.1

Term	Definition	Section of Initial Use
$DF_{i\tau}$ =	the dose conversion factor for radionuclide i for adults, in organ τ [mrem/pCi]. Values are listed in Table 2-7.	2.4.2
ECL_i =	the liquid Effluent Concentration Limit for radionuclide i from 10 CFR Part 20, Appendix B, Table 2, Column 2 [µCi/mL].	2.3.2.2
f =	the effluent flowrate at the location of the radioactivity monitor [gpm].	2.3.2.1
f_{ap} =	the anticipated actual discharge flowrate for a planned release from liquid release pathway p [gpm].	2.3.2.2
f_I =	the fraction of the year that garden vegetation is irrigated [unitless].	2.4.3
f_{mp} =	the maximum permissible effluent discharge flowrate for release pathway p [gpm].	2.3.2.2
f_r =	the effluent discharge flowrate of release pathway r [gpm].	2.3.2.2
f_t =	the average undiluted liquid waste flowrate actually observed during the period of a liquid release [gpm].	2.4.1
F =	the dilution stream flowrate which can be assured prior to the release point to the UNRESTRICTED AREA [gpm].	2.3.2.1
F_d =	the entire assured dilution flowrate for the plant site during the release period [gpm].	2.3.2.2
F_{dp} =	the dilution flowrate allocated to release pathway p [gpm].	2.3.2.2
F_I =	the near-field average dilution factor in the receiving water of the UNRESTRICTED AREA [unitless].	2.4.1
F_t =	the average dilution stream flowrate actually observed during the period of a liquid release [gpm].	2.4.1
I =	the average irrigation rate during the growing season [L/(m^2 · h)].	2.4.3
L_v =	the water content of leafy garden vegetation edible parts [L/kg].	2.4.3

Term	Definition	Section of Initial Use
M =	the additional river dilution factor from the near field of the discharge structure for the plant site to the point of irrigation water usage [unitless].	2.4.3
P =	the effective surface density of soil [kg/m^2].	2.4.3
r =	the fraction of irrigation-deposited activity retained on the edible portions of leafy garden vegetation.	2.4.3
RDF =	the required dilution factor: the minimum ratio by which liquid effluent must be diluted before reaching the UNRESTRICTED AREA, in order to ensure that the limits of Section 2.1.2 are not exceeded [unitless].	2.3.2.2
RDF_{γ} =	the RDF for a liquid release due only to its concentration of gamma-emitting radionuclides [unitless].	2.3.2.2
$RDF_{n\gamma}$ =	the RDF for a liquid release due only to its concentration of non-gamma-emitting radionuclides [unitless].	2.3.2.2
SF =	the safety factor selected to compensate for statistical fluctuations and errors of measurement [unitless].	2.3.2.2
t =	the number of whole or partial days elapsed into the current quarter, including the time to the end of the release under consideration.	2.5.1
t_b =	the period of long-term buildup of activity in soil [h].	2.4.3
t_e =	the period of leafy garden vegetation exposure during the growing season [h].	2.4.3
t_f =	the transit time from release to receptor for fish consumption [h].	2.4.2
t_h =	the time between harvest of garden vegetation and human consumption [h].	2.4.3
t_w =	the transit time from release to receptor for potable water consumption [h].	2.4.2

Term	Definition	Section of Initial Use
TF =	the tolerance factor selected to allow flexibility in the establishment of a practical monitor setpoint which could accommodate effluent releases at concentrations higher than the ECL values stated in 10 CFR 20, Appendix B, Table 2, Column 2 [unitless]; the tolerance factor must not exceed a value of 10.	2.3.2.1
U_f =	the adult rate of fish consumption [kg/y].	2.4.2
U_v =	the adult consumption rate for irrigated garden vegetation [kg/y].	2.4.2
U_w =	the adult drinking water consumption rate applicable to the plant site [L/y].	2.4.2
Y_v =	the areal density (agricultural productivity) of leafy garden vegetation [kg/m^2].	2.4.3
Z =	the applicable dilution factor for the receiving water body, in the near field of the discharge structure, during the period of radioactivity release [unitless].	2.4.1
Δt_1 =	the length of time period 1, over which C_{i1} and F_1 are averaged for liquid releases [h].	2.4.1
λ_{Ei} =	the effective removal rate for activity deposited on crop leaves [h^{-1}].	2.4.3
λ_i =	the decay constant for radionuclide i [h^{-1}].	2.4.2
λ_w =	the rate constant for removal of activity from plant leaves by weathering [h^{-1}].	2.4.3

CHAPTER 3
GASEOUS EFFLUENTS

3.1 LIMITS OF OPERATION

The following Limits of Operation implement requirements established by Technical Specifications Section 5.0. Terms printed in all capital letters are defined in Chapter 10.

3.1.1 Gaseous Effluent Monitoring Instrumentation Control

In accordance with Technical Specification 5.5.4.a, the radioactive gaseous effluent monitoring instrumentation channels shown in Table 3-1 shall be FUNCTIONAL with their alarm/trip setpoints set to ensure that the limits of Section 3.1.2.a are not exceeded. The alarm/trip setpoints of these channels shall be determined in accordance with Section 3.3.

3.1.1.1 Applicability

These limits apply as shown in Table 3-1.

3.1.1.2 Actions

With a radioactive gaseous effluent monitoring instrumentation channel alarm/trip setpoint less conservative than required by the above control, immediately suspend the release of radioactive gaseous effluents monitored by the affected channel, declare the channel NON-FUNCTIONAL, or restore the setpoint to a value that will ensure that the limits of Section 3.1.2.a are met.

With less than the minimum number of radioactive gaseous effluent monitoring instrumentation channels FUNCTIONAL, take the ACTION shown in Table 3-1. Restore the NON-FUNCTIONAL instrumentation to FUNCTIONAL status within 30 days, or if unsuccessful, explain in the next Radioactive Effluent Release Report, per Technical Specification 5.6.3, why this NON-FUNCTIONALITY was not corrected in a timely manner.

This control does not affect shutdown requirements or MODE changes.

3.1.1.3 Surveillance Requirements

Each radioactive gaseous effluent monitoring instrumentation channel shall be demonstrated FUNCTIONAL by performance of the CHANNEL CHECK, SOURCE CHECK, CHANNEL CALIBRATION and CHANNEL FUNCTIONAL TEST operations at the frequencies shown in Table 3-2.

3.1.1.4 Basis

The radioactive gaseous effluent instrumentation is provided to monitor and control, as applicable, the releases of radioactive materials in gaseous effluents during actual or potential releases of gaseous effluents. The Alarm/Trip Setpoints for these instruments shall be calculated and adjusted in accordance with the methodology and parameters in Section 3.3 to ensure that the alarm/trip will occur prior to exceeding the limits of Section 3.1.2.a. The FUNCTIONALITY and use of this instrumentation is consistent with the requirements of General Design Criteria 60, 63, and 64 of Appendix A to 10 CFR Part 50.

Table 3-1. Radioactive Gaseous Effluent Monitoring Instrumentation

Instrument	FUNCTIONALITY Requirements		
	Minimum Channels FUNCTIONAL	Applicability	ACTION
1. GASEOUS RADWASTE TREATMENT SYSTEM (Common)			
a. Noble Gas Activity Monitor, with Alarm and Automatic Termination of Release (ARE-0014)	1	During releases[a]	45
b. Effluent System Flowrate Measuring Device (AFT-0014)	1	During releases[a]	46
2. Turbine Building Vent (Each Unit)			
a. Noble Gas Activity Monitor (RE-12839C)	1	During releases[a]	47
b. Iodine and Particulate Samplers (RE-12839A & B)	1	During releases[a]	51
c. Flowrate Monitor (FT-12839 or FIS-12862)[b]	1	During releases[a]	46
d. Sampler Flowrate Monitor (1FIT-13211, 2FIT-13211)	1	During releases[a]	46
3. Plant Vent (Each Unit)			
a. Noble Gas Activity Monitor (RE-12442C or RE-12444C)	1	At all times	47,48
b. Iodine Sampler/Monitor (RE-12442B or RE-12444B)	1	At all times	51
c. Particulate Sampler/Monitor (RE-12442A or RE-12444A)	1	At all times	51
d. Flowrate Monitor (FT-12442 or 12835)	1	At all times	46
e. Sampler Flowrate Monitor (FI-12442 or FI-12444)	1	At all times	46
4. Radwaste Processing Facility Vent (Common)			
a. Particulate Monitor (ARE-16980)	1	During releases[a]	51

a. "During releases" means "During radioactive releases via this pathway."

b. During emergency filtration.

Table 3-1 (contd). Notation for Table 3-1 — ACTION Statements

ACTION 45 — With the number of channels FUNCTIONAL less than required by the Minimum Channels FUNCTIONAL requirement, the contents of the tank(s) may be released to the environment for up to 14 days provided that prior to initiating the release:

a. The local radiation monitor reading (if functional) is recorded at least once per 12 hours or at least two independent samples of the tank's contents are analyzed, and

b. At least two technically qualified members of the Facility Staff independently verify the discharge line valving, and verify the release rate calculations.

Otherwise, suspend release of radioactive effluents via this pathway.

ACTION 46 — With the number of channels FUNCTIONAL less than required by the Minimum Channels FUNCTIONAL requirement, effluent releases via this pathway may continue provided the flowrate is estimated at least once per 4 hours.

ACTION 47 — With the number of channels FUNCTIONAL less than required by the Minimum Channels FUNCTIONAL requirement, effluent releases via this pathway may continue provided the local radiation monitor reading (if functional) is recorded at least once per 12 hours or grab samples are taken at least once per 12 hours and these samples are analyzed for radioactivity within 24 hours. With the plant vent radiation monitor iodine and particulate channels NON-FUNCTIONAL during the loss of sample line heat tracing, the noble gas channel of RE-12442 and RE-12444 would still be considered valid.

ACTION 48 — With the number of channels FUNCTIONAL less than required by the Minimum Channels FUNCTIONAL requirement, record the local radiation monitor reading (if functional) for RE-2565C at least once per 12 hours or immediately suspend containment purging of radioactive effluents via this pathway.

ACTION 49 — (Not Used)

ACTION 50 — (Not Used)

ACTION 51 — With the number of channels FUNCTIONAL less than required by the Minimum Channels FUNCTIONAL requirement, effluent releases via the affected pathway may continue provided one of the following options is available (1) the local radiation monitor reading (if functional) is recorded at least once per 12 hours (2) samples are continuously collected with the installed skid or (3) samples are continuously collected with auxiliary sampling equipment. RE-12444A and B may be verified functional by recording local radiation monitor skid flow once per 12 hours. With the plant vent radiation monitor particulate and iodine channels NON-FUNCTIONAL during the loss of sample line heat tracing, estimate radioactive releases for up to 48 hours while continuing to monitor noble gas activity from RE-12442 and RE-12444.

Table 3-2. Radioactive Gaseous Effluent Monitoring Instrumentation Surveillance Requirements

Instrument	Surveillance Requirements				
	CHANNEL CHECK	SOURCE CHECK	CHANNEL CALIBRA-TION	CHANNEL FUNCTIO-NAL TEST	MODES[c]
1. GASEOUS RADWASTE TREATMENT SYSTEM (Common)					
a. Noble Gas Activity Monitor, with Alarm and Automatic Termination of Release (ARE-0014)	P	P	R[b]	R[a(1)]	During Release
b. Effluent System Flowrate Measuring Device (AFT-0014)	P	NA	R	NA	During Release
2. Turbine Building Vent (Each Unit)					
a. Noble Gas Activity Monitor (RE-12839C)	D	M	R[b]	R[a(2)]	During Release
b. Iodine and Particulate Samplers (RE-12839A&B)	W[d]	NA	NA	NA	During Release
c. Flowrate Monitor (FT-12839 or FIS-12862)	D	NA	R	NA	During Release
d. Sampler Flowrate Monitor (1FIT-13211, 2FIT-13211)	D	NA	R	Q	During Release
3. Plant Vent (Each Unit)					
a. Noble Gas Activity Monitor (RE-12442C or RE-12444C)	D	M	R[b]	R[a(2)]	All
b. Particulate and Iodine Monitors (RE-12442A&B)	W[d]	NA	R	R[a(2)]	All
c. Particulate and Iodine Samplers (RE–12444A&B)	W[d]	NA	NA	NA	All
d. Flowrate Monitor (FT-12442 or 12835)	D	NA	R	NA	All
e. Sampler Flowrate Monitor (FI-12442 or FI–12444)	D	NA	R	Q	All
4. Radwaste Processing Facility Vent (Common)					
a. Particulate Monitor (ARE-16980)	W[d]	Q	R[e]	N/A	During Release

Table 3-2 (contd). Notation for Table 3-2

a. In addition to the basic functions of a CHANNEL FUNCTIONAL TEST (Section 10.2):

(1) The CHANNEL FUNCTIONAL TEST shall also demonstrate that automatic isolation of this pathway and control room annunciation occurs (for item a. below only); and control room CRT indication occurs (if any of the following conditions exist):

(a) Instrument indicates measured levels above the alarm/trip setpoint;

(b) Instrument indicates an "Equipment Trouble" alarm;

(c) Instrument indicates a "Low" alarm; or

(d) Instrument indicates channel "Deactivated."

(2) The CHANNEL FUNCTIONAL TEST shall also demonstrate that control room annunciation occurs (for item a. below only); and that control room CRT indication occurs (if any of the following conditions exist):

(a) Instrument indicates measured levels above the alarm/trip setpoint;

(b) Instrument indicates an "Equipment Trouble" alarm;

(c) Instrument indicates a "Low" alarm; or

(d) Instrument indicates channel "Deactivated." ("Loss of counts" for ARE-16980 only)

b. The initial CHANNEL CALIBRATION shall be performed using one or more of the reference standards certified by the National Institute of Standards and Technology, or using standards that have been obtained from suppliers that participate in measurement assurance activities with NIST. These standards shall permit calibrating the system over its intended range of energy and measurement range. For any subsequent CHANNEL CALIBRATION, sources that have been related to the initial calibration shall be used.

c. MODES in which surveillance is required. "All" means "At all times." "During release" means "During radioactive release via this pathway."

d. The channel check shall consist of visually verifying that the collection device (i.e., particulate filter or charcoal cartridge, etc.) is in place for sampling.

e. The CHANNEL CALIBRATION verifies proper operation of the CHANNEL FUNCTIONAL TEST requirements described in Notation a(2) above.

3.1.2 Gaseous Effluent Dose Rate Control

In accordance with Technical Specifications 5.5.4.c and 5.5.4.g, the licensee shall conduct operations so that the dose rates due to radioactive materials released in gaseous effluents from the site to areas at and beyond the SITE BOUNDARY are limited as follows:

a. For noble gases: Less than or equal to a dose rate of 500 mrem/y to the total body and less than or equal to a dose rate of 3000 mrem/y to the skin, and

b. For Iodine-131, Iodine-133, tritium, and for all radionuclides in particulate form with half-lives greater than 8 days: Less than or equal to a dose rate of 1500 mrem/y to any organ.

3.1.2.1 Applicability

This limit applies at all times.

3.1.2.2 Actions

With a dose rate due to radioactive material released in gaseous effluents exceeding the limit stated in Section 3.1.2, immediately decrease the release rate to within the stated limit.

These limits do not affect shutdown requirements or MODE changes.

3.1.2.3 Surveillance Requirements

The dose rates due to radioactive materials in areas at or beyond the SITE BOUNDARY due to releases of gaseous effluents shall be determined to be within the above limits, in accordance with the methods and procedures in Section 3.4.1, by obtaining representative samples and performing analyses in accordance with the sampling and analysis program specified in Table 3-3.

3.1.2.4 Basis

This control is provided to ensure that gaseous effluent dose rates will be maintained within the limits that historically have provided reasonable assurance that radioactive material discharged in gaseous effluents will not result in a dose to a MEMBER OF THE PUBLIC in an UNRESTRICTED AREA, either within or outside the SITE BOUNDARY, exceeding the limits specified in Appendix I of 10 CFR Part 50, while allowing operational flexibility for effluent releases. For MEMBERS OF THE PUBLIC who may at times be within the SITE BOUNDARY, the occupancy of the MEMBER OF THE PUBLIC will be sufficiently low to compensate for any increase in the atmospheric diffusion factor above that for the SITE BOUNDARY.

The dose rate limit for Iodine-131, Iodine-133, tritium, and radionuclides in particulate form with half-lives greater than 8 days specifically applies to dose rates to a child via the inhalation pathway.

This control applies to the release of gaseous effluents from all reactors at the site.

Table 3-3. Radioactive Gaseous Waste Sampling and Analysis Program

Gaseous Release Type	Sampling and Analysis Requirements[a]			
	Sampling FREQUENCY	Minimum Analysis FREQUENCY	Type of Activity Analysis	MINIMUM DETECTABLE CONCENTRATION (MDC) (μCi/mL)
Waste Gas Decay Tank (Common)	P Each Tank Grab Sample	P Each Tank	Noble Gas PRINCIPAL GAMMA EMITTERS	1 E-4
Containment Purge 24" or 14" (Each Unit)	P[c] Each Purge Grab Sample	P[c] Each Purge	Noble Gas PRINCIPAL GAMMA EMITTERS	1 E-4
		M	H-3 (Oxide)	1 E-6
Plant Vent (Each Unit)	M[c,d,f] Grab Sample	M[c]	Noble Gas PRINCIPAL GAMMA EMITTERS	1 E-4
			H-3 (Oxide)	1 E-6
Condenser Air Ejector & Steam Packing Exhaust (Each Unit)[b]	M Grab Sample	M	Noble Gas PRINCIPAL GAMMA EMITTERS	1 E-4
			H-3 (Oxide)	1 E-6
Plant Vent, Condenser Air Ejector & Steam Packing Exhaust (Each Unit)[b]	CONTINUOUS[g]	W[e] Charcoal or Silver Zeolite Sample	I-131	1 E-12
	CONTINUOUS[g]	W[e] Particulate Sample	Particulate PRINCIPAL GAMMA EMITTERS	1 E-11
	CONTINUOUS[g]	M COMPOSITE Particulate Sample	Gross Alpha	1 E-11
	CONTINUOUS[g]	Q COMPOSITE Particulate Sample	Sr-89, Sr-90	1 E-11
Radwaste Processing Facility Vent (Common)	CONTINUOUS[g]	W[h] Particulate Sample	Particulate PRINCIPAL GAMMA EMITTERS	1 E-11

Table 3-3 (contd). Notation for Table 3-3

a. Terms printed in all capital letters are defined in Chapter 10.

b. The turbine building vent is the release point for the condenser air ejector and steam packing exhaust. All sampling and analyses may be omitted for this vent, provided the absence of a primary to secondary leak has been demonstrated, that is, if the gamma activity in the secondary water does not exceed background by more than 20%.

c. Sampling and analysis shall also be performed following shutdown, startup, or a THERMAL POWER change exceeding 15% of the RATED THERMAL POWER within a one-hour period. This requirement does not apply if (1) analysis shows that the DOSE EQUIVALENT I–131 concentration in the primary coolant has not increased more than a factor of 3; and (2) the noble gas monitor shows that effluent activity has not increased more than a factor of 3.

d. Tritium grab samples shall be taken at least once per 24 hours when the refueling cavity is flooded.

e. Samples shall be changed at least once per 7 days and analyses shall be completed within 48 hours after changing (or after removal from sampler). Sampling shall also be performed at least once per 24 hours for at least 7 days following each shutdown, startup, or THERMAL POWER change exceeding 15% of RATED THERMAL POWER in one hour, and analyses shall be completed within 48 hours of changing. When samples collected for 24 hours are analyzed, the corresponding MDC may be increased by a factor of 10. This requirement does not apply if (1) analysis shows that the DOSE EQUIVALENT I–131 concentration in the primary coolant has not increased more than a factor of 3; and (2) the noble gas monitor shows that effluent activity has not increased more than a factor of 3.

f. Tritium grab samples shall be taken at least once per 7 days from the Unit 1 plant vent, whenever spent fuel is in the spent fuel pool (Unit 1 plant vent only).

g. The ratio of the sample flowrate to the sampled stream flowrate shall be known for the time period covered by each dose or dose rate calculation made in accordance with controls specified in Sections 3.1.2, 3.1.3, and 3.1.4.

h. Samples shall be changed at least once per 7 days and analyses shall be completed within 48 hours after changing (or removal of sampler).

3.1.3 Gaseous Effluent Air Dose Control

In accordance with Technical Specifications 5.5.4.e and 5.5.4.h, the air dose due to noble gases released in gaseous effluents, from each reactor unit, to areas at and beyond the SITE BOUNDARY shall be limited to the following:

a. During any calendar quarter: Less than or equal to 5 mrad for gamma radiation and less than or equal to 10 mrad for beta radiation, and

b. During any calendar year: Less than or equal to 10 mrad for gamma radiation and less than or equal to 20 mrad for beta radiation.

3.1.3.1 Applicability

This limit applies at all times.

3.1.3.2 Actions

With the calculated air dose from radioactive noble gases in gaseous effluents exceeding any of the above limits, prepare and submit to the Nuclear Regulatory Commission within 30 days a special report which identifies the cause(s) for exceeding the limit(s); defines the corrective actions that have been taken to reduce the releases; and defines the proposed corrective actions to be taken to assure that subsequent releases of radioactive noble gases in gaseous effluents will be in compliance with the limits of Section 3.1.3.

This control does not affect shutdown requirements or MODE changes.

3.1.3.3 Surveillance Requirements

Cumulative air dose contributions from noble gas radionuclides released in gaseous effluents from each unit to areas at and beyond the SITE BOUNDARY, for the current calendar quarter and current calendar year, shall be determined in accordance with Section 3.4.2 at least once per 31 days.

3.1.3.4 Basis

This control is provided to implement the requirements of Sections II.B, III.A and IV.A of Appendix I, 10 CFR Part 50. Section 3.1.3 implements the guides set forth in Section II.B of Appendix I. The ACTION statements in Section 3.1.3.2 provide the required operating flexibility and at the same time implement the guides set forth in Section IV.A of Appendix I, assuring that the releases of radioactive material in gaseous effluents to UNRESTRICTED AREAS will be kept "as low as is reasonably achievable." The Surveillance requirements in Section 3.1.3.3 implement the requirements in Section III.A of Appendix I, which require that conformance with the guides of Appendix I be shown by calculational procedures based on models and data such that the actual exposure of a MEMBER OF THE PUBLIC through appropriate pathways is unlikely to be substantially underestimated. The dose calculations established in Section 3.4.2 for calculating the doses due to the actual releases of noble gases in gaseous effluents are consistent with the methodology provided in Regulatory Guide 1.109 (Reference 3), and Regulatory Guide 1.111 (Reference 5). The equations in Section 3.4.2 provided for determining the air doses at the SITE BOUNDARY are based upon the historical annual average atmospheric conditions.

3.1.4 Control on Gaseous Effluent Dose to a Member of the Public

In accordance with Technical Specifications 5.5.4.e and 5.5.4.i, the dose to a MEMBER OF THE PUBLIC from I–131, I–133, tritium, and all radionuclides in particulate form with half-lives greater than 8 days in gaseous effluents released, from each reactor unit, to areas at and beyond the SITE BOUNDARY shall be limited to the following:

a. During any calendar quarter: Less than or equal to 7.5 mrem to any organ, and

b. During any calendar year: Less than or equal to 15 mrem to any organ.

3.1.4.1 Applicability

This limit applies at all times.

3.1.4.2 Actions

With the calculated dose from the release of I-131, I-133, tritium, or radionuclides in particulate form with half-lives greater than 8 days, in gaseous effluents exceeding any of the above limits, prepare and submit to the Nuclear Regulatory Commission within 30 days a special report which identifies the cause(s) for exceeding the limit; defines the corrective actions that have been taken to reduce the releases of radioiodines and radionuclides in particulate form with half-lives greater than 8 days in gaseous effluents; and defines proposed corrective actions to assure that subsequent releases will be in compliance with the limits stated in Section 3.1.4.

This control does not affect shutdown requirements or MODE changes.

3.1.4.3 Surveillance Requirements

Cumulative organ dose contributions to a MEMBER OF THE PUBLIC from I–131, I–133, tritium, and radionuclides in particulate form with half-lives greater than 8 days released in gaseous effluents from each unit to areas at and beyond the SITE BOUNDARY, for the current calendar quarter and current calendar year, shall be determined in accordance with Section 3.4.3 at least once per 31 days.

3.1.4.4 Basis

This control is provided to implement the requirements of Section II.C, III.A and IV.A of Appendix I, 10 CFR Part 50. The limits stated in Section 3.1.4 are the guides set forth in Section II.C of Appendix I. The ACTION statements in Section 3.1.4.2 provide the required operating flexibility and at the same time implement the guides set forth in Section IV.A of Appendix I to assure that the releases of radioactive materials in gaseous effluents to UNRESTRICTED AREAS will be kept "as low as is reasonably achievable." The calculational methods specified in the Surveillance Requirements of Section 3.1.4.3 implement the requirements in Section III.A of Appendix I that conformance with the guides of Appendix I be shown by calculational procedures based on models and data, such that the actual exposure of a MEMBER OF THE PUBLIC through appropriate pathways is unlikely to be substantially underestimated. The calculational methods in Section 3.4.3 for calculating the doses due to the actual releases of the subject materials are consistent with the methodology provided in Regulatory Guide 1.109 (Reference 3), and Regulatory Guide 1.111 (Reference 5). These equations provide for determining the actual doses

based upon the historical annual average atmospheric conditions. The release specifications for radioiodines, radioactive materials in particulate form and radionuclides other than noble gases are dependent on the existing radionuclide pathways to man, in the areas at and beyond the SITE BOUNDARY. The pathways which were examined in the development of these calculations were: 1) individual inhalation of airborne radionuclides, 2) deposition of radionuclides onto green leafy garden vegetation with subsequent consumption by man, 3) deposition onto grassy areas where milk animals and meat producing animals graze with consumption of the milk and meat by man, and 4) deposition on the ground with subsequent exposure of man.

3.1.5 Gaseous Radwaste Treatment System Control

In accordance with Technical Specification 5.5.4.f, the GASEOUS WASTE PROCESSING SYSTEM and the VENTILATION EXHAUST TREATMENT SYSTEM shall be FUNCTIONAL. The appropriate portions of the GASEOUS WASTE PROCESSING SYSTEM and the VENTILATION EXHAUST TREATMENT SYSTEM shall be used to reduce radioactive materials in gaseous wastes prior to their discharge when the projected doses in 31 days due to gaseous effluent releases, from each reactor unit, to areas at and beyond the SITE BOUNDARY would exceed 0.2 mrad to air from gamma radiation, 0.4 mrad to air from beta radiation, or 0.3 mrem to any organ of a MEMBER OF THE PUBLIC.

3.1.5.1 Applicability

These limits apply at all times.

3.1.5.2 Actions

With gaseous waste being discharged without treatment and in excess of the limits in Section 3.1.5, prepare and submit to the Nuclear Regulatory Commission within 30 days a special report which includes the following information:

a. Identification of any NON-FUNCTIONAL equipment or subsystem and the reason for NON-FUNCTIONALITY,

b. Action(s) taken to restore the NON-FUNCTIONAL equipment to FUNCTIONAL status, and

c. Summary description of action(s) taken to prevent a recurrence.

This control does not affect shutdown requirements or MODE changes.

3.1.5.3 Surveillance Requirements

Doses due to gaseous releases from each unit to areas at and beyond the SITE BOUNDARY shall be projected at least once per 31 days, in accordance with Section 3.5.1, when the GASEOUS WASTE PROCESSING SYSTEM or the VENTILATION EXHAUST TREATMENT SYSTEM is not being fully utilized.

The GASEOUS WASTE PROCESSING SYSTEM and the VENTILATION EXHAUST TREATMENT SYSTEM shall be demonstrated FUNCTIONAL:

by meeting the controls of Sections 3.1.2, and either 3.1.3 (for the GASEOUS WASTE PROCESSING SYSTEM) or 3.1.4 (for the VENTILATION EXHAUST TREATMENT SYSTEM).

3.1.5.4 Basis

The FUNCTIONALITY of the GASEOUS WASTE PROCESSING SYSTEM ensures that the system will be available for use whenever gaseous effluents require treatment prior to release to the environment. The requirement that the appropriate portions of this system be used, when specified, provides reasonable assurance that the releases of radioactive materials in gaseous effluents will be kept "as low as is reasonably achievable." This control implements the requirements of 10 CFR Part 50.36a, General Design Criterion 60 of Appendix A to 10 CFR Part 50, and the design objectives given in Section II.D of Appendix I to 10 CFR Part 50. The specified limits governing the use of appropriate portions of the system were specified as a suitable fraction of the dose design objectives set forth in Section II.B and II.C of Appendix I, 10 CFR Part 50, for gaseous effluents.

This control applies to the release of radioactive materials in gaseous effluents from each unit at the site. For units with shared radwaste treatment systems, the gaseous effluents from the shared system are proportioned among the units sharing that system.

3.1.6 Major Changes to Gaseous Radioactive Waste Treatment Systems

Licensee initiated MAJOR CHANGES TO GASEOUS RADIOACTIVE WASTE TREATMENT SYSTEMS:

a. Shall be reported to the Nuclear Regulatory Commission in the Radioactive Effluents Release Report for the period in which the change was implemented. The discussion of each change shall contain the information described in Section 7.2.2.7.

b. Shall become effective upon review and approval by the Vice President — Plant.

3.2 GASEOUS WASTE PROCESSING SYSTEM

At Plant Vogtle, there are five potential points where radioactivity may be released to the atmosphere in gaseous discharges. These five *potential* release pathways are the Unit 1 and Unit 2 Plant Vents; the Unit 1 and Unit 2 Turbine Building Vents; and the Radwaste Processing Facility Vent. However, the Turbine Building Vents are not normal release pathways unless a primary-to-secondary leak exists. The Radwaste Processing Facility Vent is not a normal release pathway unless a spill occurs. The figures on the following pages give schematic diagrams of the Gaseous Waste Treatment System and the Ventilation Exhaust Treatment Systems (Reference 11).

The Unit 1 Plant Vent release pathway includes two release sources that are common to the two units: ventilation air from the Fuel Handling Building, and discharges from the GASEOUS WASTE PROCESSING SYSTEM. Otherwise, discharges from the two reactor units are separated. Reactor Containment Building ventilation releases are through the respective plant vents. The Turbine Building Vent serves as the discharge point for both the condenser air ejector and the steam packing exhauster system. The Radwaste Processing Facility Vent includes sources from the Radwaste Processing Facility Process area.

Releases from the two Turbine Building Vents and the Radwaste Processing Facility Vent are considered to be ground-level releases, whereas releases from the two Plant Vents are considered mixed-mode releases. Chapter 8 discusses the calculation of atmospheric dispersion parameters using the ground-level and mixed-mode (i.e., split-wake) models. All five potential release pathways are considered to be continuous (as opposed to batch) in nature.

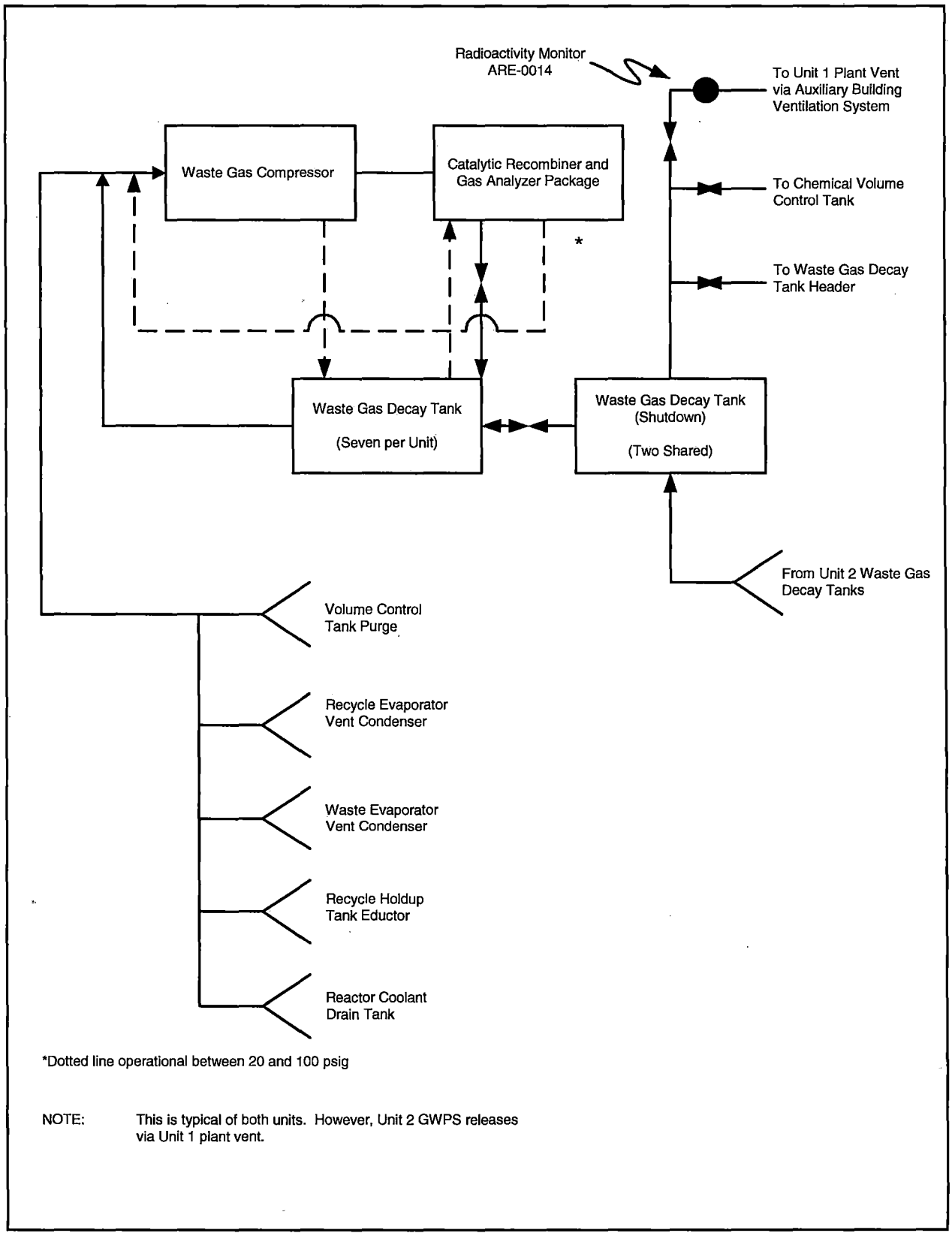

Figure 3-1. Schematic Diagram of the Gaseous Radwaste Treatment System

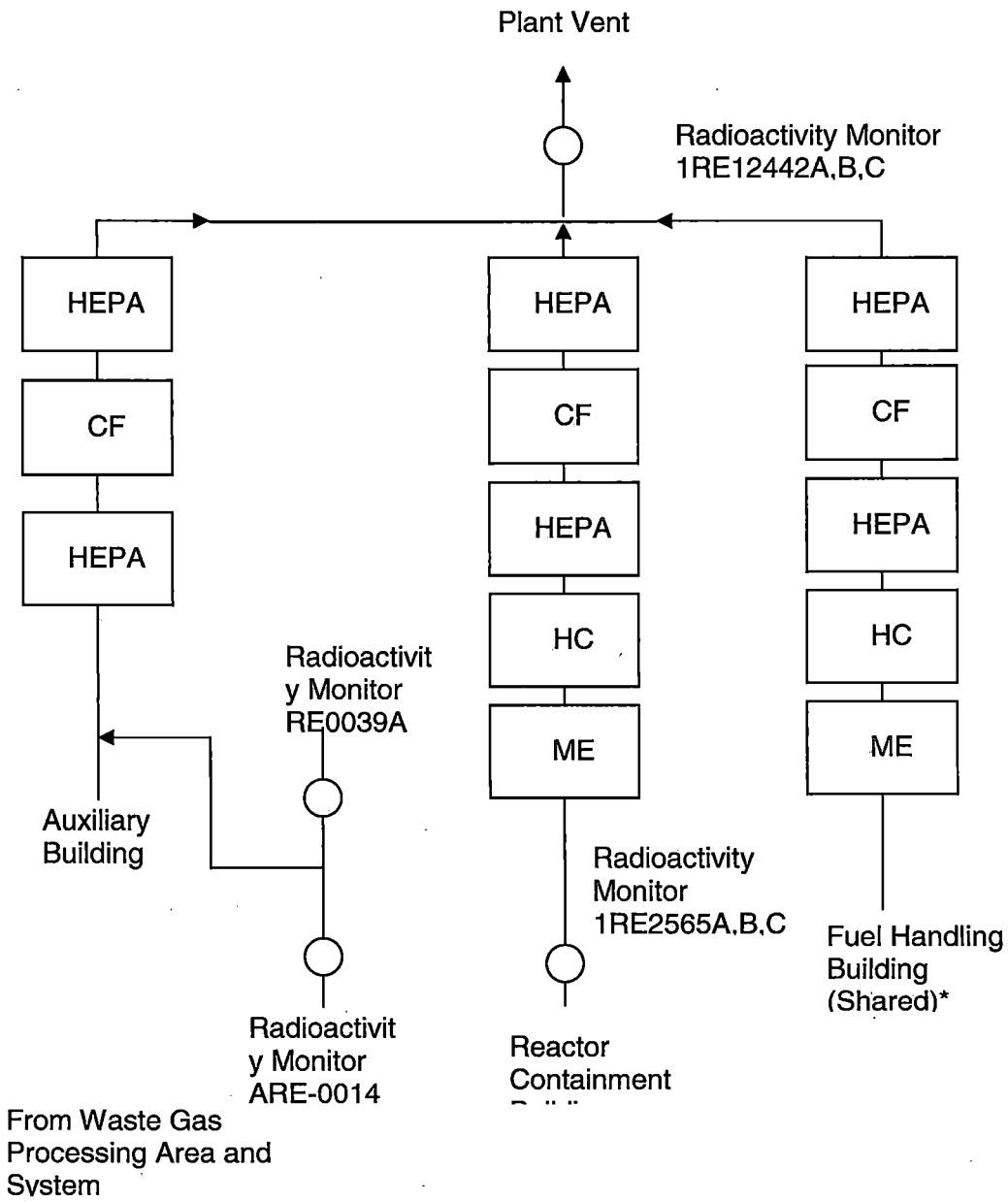

HEPA - High-Efficiency Particulate Air Filter
CF - Activated Charcoal Filter
HC - Heating Coil
ME - Moisture Eliminator

* Prior to treatment by the Fuel Handling Building Ventilation Exhaust Treatment System, Exhaust from Unit 1 Spent Fuel Pool Area is monitored by ARE2532B and ARE2533B; exhaust from Unit 2 Spent Fuel Pool Area is monitored by ARE2532A and ARE2533A.

Figure 3-2. Schematic Diagram of the Unit 1 Plant Vent Release Pathway

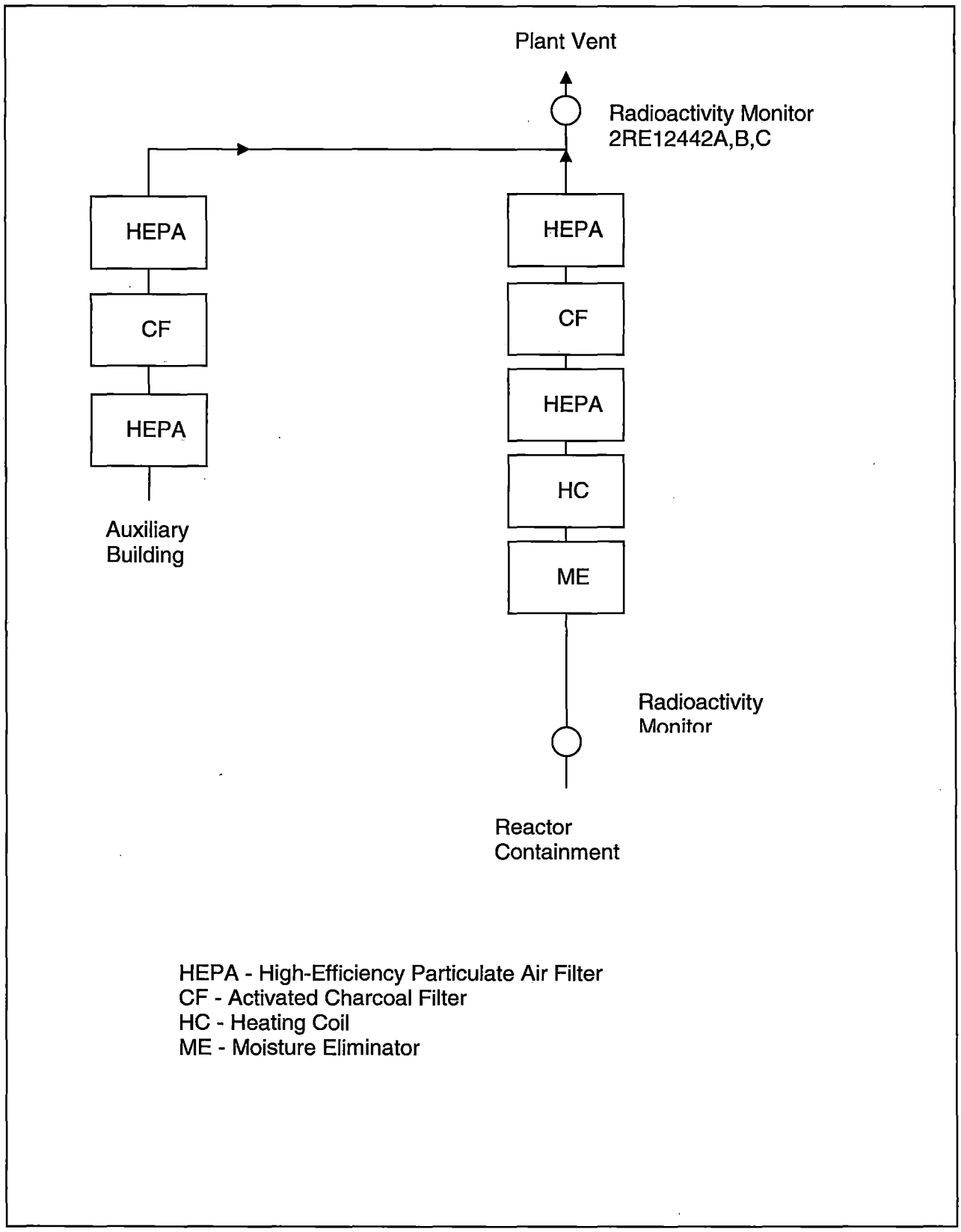

Figure 3-3. Schematic Diagram of the Unit 2 Plant Vent Release Pathway

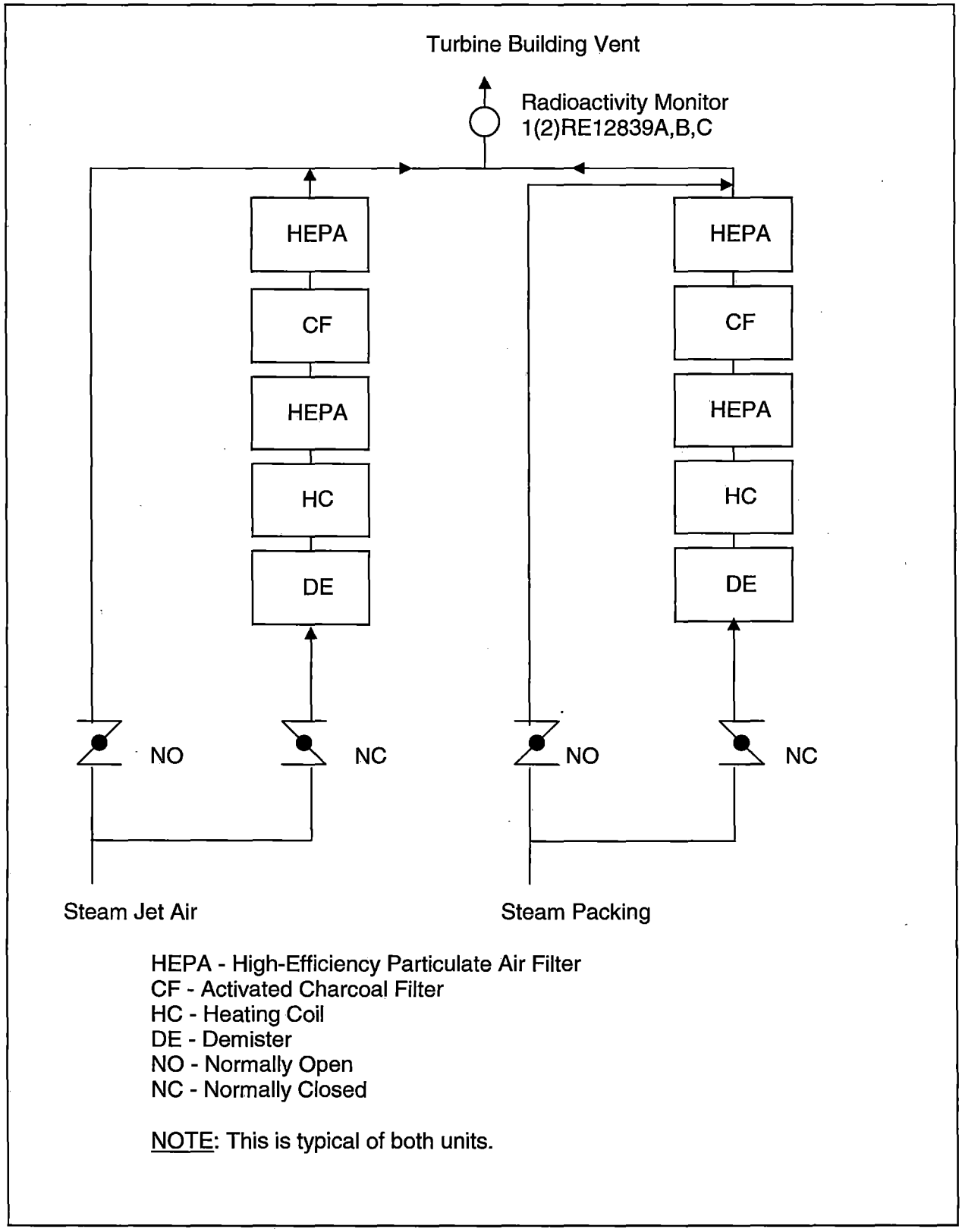

Figure 3-4. Schematic Diagram of the Turbine Building Vent Release Pathway (Typical of Both Units)

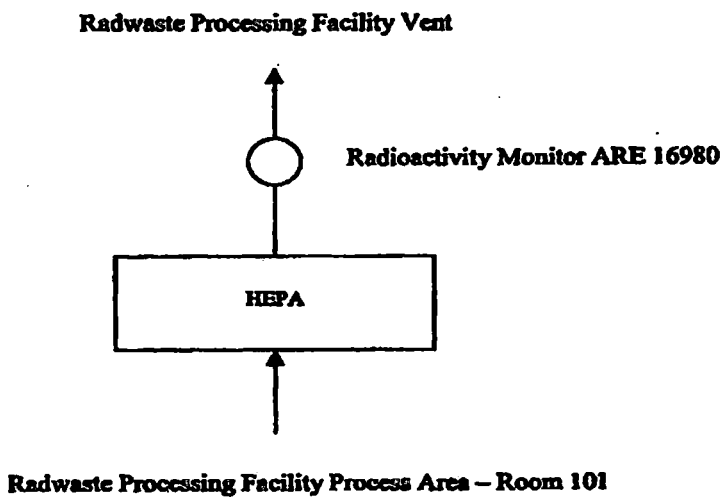

Figure 3-5. Schematic Diagram of the Radwaste Processing Facility Ventilation Release Pathway

3.3 GASEOUS EFFLUENT MONITOR SETPOINTS

3.3.1 General Provisions Regarding Noble Gas Monitor Setpoints

Noble gas radioactivity monitor setpoints calculated in accordance with the methodology presented in this section are intended to ensure that the limits of Section 3.1.2.a are not exceeded. They will be regarded as upper bounds for the actual high alarm setpoints. That is, a lower high alarm setpoint may be established or retained on the monitor, if desired. Intermediate level setpoints should be established at an appropriate level to give sufficient warning prior to reaching the high alarm setpoint.

If no release is planned for a given pathway, or if there is no detectable activity in the gaseous stream being evaluated for release, the setpoint should be calculated in accordance with the methods presented below, based on an assumed concentration of Kr-88 that leads to a practical setpoint. A practical setpoint in this context is one which prevents spurious alarms, and yet produces an alarm should a significant inadvertent release occur.

Section 3.1.1 establishes the requirements for gaseous effluent monitoring instrumentation, and Section 3.2 describes the VENTILATION EXHAUST TREATMENT SYSTEM and the GASEOUS WASTE PROCESSING SYSTEM. From those Sections, it can be seen that certain monitors are located on final release pathways, that is, streams that are being monitored immediately before being discharged from the plant; the setpoint methodology for these monitors is presented in Section 3.3.2. Other monitors are located on source streams, that is, streams that merge with other streams prior to passing a final monitor and being discharged; the setpoint methodology for these monitors is presented in Section 3.3.3. Table 3-4 identifies which of these setpoint methodologies applies to each monitor. Some additional monitors with special setpoint requirements are discussed in Section 3.3.5.

As established in Section 3.1.1, gaseous effluent monitor setpoints are *required* only for the noble gas monitors on certain potential release streams: the two Plant Vents, the two Turbine Building Vents, and the GASEOUS WASTE PROCESSING SYSTEM discharge. However, because of the potential significance of releases from other sources, Section 3.3 discusses setpoint methodologies for certain additional monitors, as well.

Table 3-4. Applicability of Gaseous Monitor Setpoint Methodologies

Final Release Pathways with no Monitored Source Streams

Setpoint Method: Section 3.3.2
Release Elevation: Ground-level

Unit 1 or Unit 2 Turbine Building Vent

Monitor: 1RE-12839C/2RE-12839C
Maximum Flowrate: 900 cfm (4.25 E+05 mL/s)

Final Release Pathways with One or More Monitored Source Streams

Release Elevation: Mixed-Mode

Unit 1 Plant Vent

Monitors: 1RE-12442C, 1RE-12444C
Maximum Flowrate: 187,000 cfm (8.83 E+07 mL/s)
Setpoint Method: Section 3.3.2
Release Type: CONTINUOUS

Source Stream: Unit 1 Reactor Containment Purge

Monitor: 1RE-2565C
Maximum Flowrate: release-dependent
Setpoint Method: Section 3.3.3
Release Type: BATCH

Source Stream: Gaseous Waste Treatment System

Monitor: ARE-0014
Maximum Flowrate: release-dependent
Setpoint Method: Section 3.3.3
Release Type: BATCH

Unit 2 Plant Vent

Monitors: 2RE-12442C, 2RE-12444C
Maximum Flowrate: 112,500 cfm (5.31 E+07 mL/s)
Setpoint Method: Section 3.3.2
Release Type: CONTINUOUS

Source Stream: Unit 2 Reactor Containment Purge

Monitor: 2RE-2565C
Maximum Flowrate: release-dependent
Setpoint Method: Section 3.3.3
Release Type: BATCH

$\overline{(X/Q)}_{vb}$ Values for Use in Setpoint Calculations

Ground-Level Releases: 2.55×10^{-6} s/m^3 [NE Sector]

Mixed-Mode Releases: 4.62×10^{-7} s/m^3 [NE Sector]

Maximum flowrate values are from Reference 11, Table 11.5.2-1 and Table 11.5.5-1.

3.3.2 Setpoint for the Final Noble Gas Monitor on Each Release Pathway

3.3.2.1 Overview of Method

Gaseous effluent radioactivity monitors are intended to alarm prior to exceeding the limits of Section 3.1.2.a. Therefore, their alarm setpoints are established to ensure compliance with the following equation:

$$c = the \quad lesser \quad of \begin{cases} AG \cdot SF \cdot X \cdot R_t \\ AG \cdot SF \cdot X \cdot R_k \end{cases} \qquad \textbf{(3.1)}$$

where:

c	=	the setpoint, in µCi/mL, of the radioactivity monitor measuring the concentration of radioactivity in the effluent line prior to release. The setpoint represents a concentration which, if exceeded, could result in dose rates exceeding the limits of Section 3.1.2.a at or beyond the SITE BOUNDARY.
AG	=	an administrative allocation factor applied to divide the release limit among all the gaseous release pathways at the site.
SF	=	the safety factor selected to compensate for statistical fluctuations and errors of measurement.
X	=	the noble gas concentration for the release under consideration.
R_t	=	the ratio of the dose rate limit for the total body, 500 mrem/y, to the dose rate to the total body for the conditions of the release under consideration.
R_k	=	the ratio of the dose rate limit for the skin, 3000 mrem/y, to the dose rate to the skin for the conditions of the release under consideration.

Equation (3.1) shows the relationships of the critical parameters that determine the setpoint. However, in order to apply the methodology presented in the equation to a mixture of noble gas radionuclides, radionuclide-specific concentrations and dose factors must be taken into account under conditions of maximum flowrate for the release point and annual average meteorology.

The basic setpoint method presented below is applicable to the radioactivity monitor nearest the point of release for the release pathway. For monitors measuring the radioactivity in source streams that merge with other streams prior to subsequent monitoring and release, the modifications presented in Section 3.3.3 must be applied.

3.3.2.2 Setpoint Calculation Steps

Step 1: Determine the concentration, X_{iv}, of each noble gas radionuclide i in the gaseous stream v being considered for release, in accordance with the sampling and analysis requirements of Section 3.1.2. Then sum these concentrations to determine the total noble gas concentration, $\sum_i X_{iv}$.

Step 2: Determine R_t, the ratio of the dose rate limit for the total body, 500 mrem/y, to the total body dose rate due to noble gases detected in the release under consideration, as follows:

$$R_t = \frac{500}{\overline{(X/Q)}_{vb} \sum_i [K_i \cdot Q_{iv}]} \quad \textbf{(3.2)}$$

where:

500 = the dose rate limit for the total body, 500 mrem/y.

$\overline{(X/Q)}_{vb}$ = the highest annual average relative concentration at the SITE BOUNDARY for the discharge point of release pathway v. Table 3-4 includes an indication of what release elevation is applicable to each release pathway; release elevation determines the appropriate value of $\overline{(X/Q)}_{vb}$.

K_i = the total-body dose factor due to gamma emissions from noble gas radionuclide i, in (mrem/y)/(μCi/m^3), from Table 3-5.

Q_{iv} = the release rate of noble gas radionuclide i from the release pathway under consideration, in μCi/s, calculated as the product of X_{iv} and f_{av}, where:

X_{iv} = the concentration of noble gas radionuclide i for the particular release, in μCi/mL.

f_{av} = the maximum anticipated flowrate for release pathway v during the period of the release under consideration, in mL/s.

Step 3: Determine R_k, the ratio of the dose rate limit for the skin, 3000 mrem/y, to the skin dose rate due to noble gases detected in the release under consideration, as follows:

$$R_k = \frac{3000}{\overline{(X/Q)}_{vb} \sum_i [(L_i + 1.1M_i) \cdot Q_{iv}]} \quad \textbf{(3.3)}$$

where:

3000 = the dose rate limit for the skin, 3000 mrem/y.

L_i = the skin dose factor due to beta emissions from noble gas radionuclide i, in (mrem/y)/(μCi/m3), from Table 3-5.

M_i = the air dose factor due to gamma emissions from noble gas radionuclide i, in (mrad/y)/(μCi/m3), from Table 3-5.

1.1 = the factor to convert air dose in mrad to skin dose in mrem.

All other terms were defined previously.

Step 4: Determine the maximum noble gas radioactivity monitor setpoint concentration.

Based on the values determined in previous steps, the radioactivity monitor setpoint for the planned release is calculated to ensure that the limits of Section 3.1.2.a will not be exceeded. Because the radioactivity monitor responds primarily to radiation from noble gas radionuclides, the monitor setpoint c_{nv} (in µCi/mL) is based on the concentration of all noble gases in the waste stream, as follows:

where:

c_{nv} = the calculated setpoint, in µCi/mL, for the noble gas monitor serving gaseous release pathway v.

$$c_{nv} = the \quad lesser \quad of \begin{cases} AG_v \cdot SF \cdot \sum_i X_{iv} \cdot R_t \\ AG_v \cdot SF \cdot \sum_i X_{iv} \cdot R_k \end{cases} \qquad \textbf{(3.4)}$$

AG_v = the administrative allocation factor for gaseous release pathway v, applied to divide the release limit among all the gaseous release pathways at the site. The allocation factor may be assigned any value between 0 and 1, under the condition that the sum of the allocation factors for all simultaneously-active final release pathways at the entire plant site does not exceed 1. Alternative methods for determination of AG_v are presented in Section 3.3.4.

SF = the safety factor selected to compensate for statistical fluctuations and errors of measurement. The value for the safety factor must be between 0 and 1. A value of 0.5 is reasonable for gaseous releases; a more precise value may be developed if desired.

X_{iv} = the measured concentration of noble gas radionuclide i in gaseous stream v, as defined in Step 1, in µCi/mL.

The values of R_t and R_k to be used in the calculation are those which were determined in Steps 2 and 3 above.

Step 5: Determine whether the release is permissible, as follows:

If $c_{nv} \geq \sum_i X_{iv}$, the release is permissible. However, if c_{nv} is within about 10 percent of $\sum_i X_{iv}$, it may be impractical to use this value of c_{nv}. This situation indicates that measured concentrations are approaching values which would cause the limits of Section 3.1.2.a to be exceeded. Therefore, steps should be taken to reduce contributing source terms of gaseous radioactive material, or to adjust the allocation of the limits among the active release points. The setpoint calculations (steps 1–4) must then be repeated with parameters that reflect the modified conditions.

If $c_{nv} < \sum_i X_{iv}$, the release may not be made as planned. Consider the alternatives discussed in the paragraph above, and calculate a new setpoint based on the results of the actions taken.

3.3.2.3 Use of the Calculated Setpoint

The setpoint calculated above is in the units μCi/mL. The monitor actually measures a count rate, subtracts a predetermined background count rate, and multiplies by a calibration factor to convert from count rate to μCi/mL.

Initial calibration by the manufacturer and Georgia Power Company of the gaseous effluent monitors specified in Section 3.1.1 utilized at least one NIST-traceable gaseous radionuclide source in the exact geometry of each production monitor. The point and gaseous sources used covered the beta particle end point energy range from 0.293 MeV to at least 1.488 MeV. The calibration factor is a function of the radionuclide mix in the gas to be released, and normally will be calculated for the monitor based on the results of the sample results from the laboratory gamma-ray spectrometer system. The mix-dependent calibration factor will be used as the gain factor in the PERMS monitor, or used to modify the calculated base monitor setpoint so that the default calibration factor in the PERMS monitor can be left unchanged.

Notwithstanding the initial calibration, monitor calibration data for conversion between count rate and concentration *may* include operational data obtained from determining the monitor response to stream concentrations measured by sample analysis.

In all cases, monitor background must be controlled so that the monitor is capable of responding to concentrations in the range of the setpoint value. Contributions to the monitor background may include any or all of the following factors: ambient background radiation, plant-related radiation levels at the monitor location (which may change between shutdown and power conditions), and internal background due to contamination of the monitor's sample chamber.

3.3.3 Setpoints for Noble Gas Monitors on Effluent Source Streams

Table 3-4 lists certain gaseous release pathways as being source streams. As may be seen in the figures of Section 3.2, these are streams that merge with other streams, prior to passing a final radioactivity monitor and being released. Unlike the final monitors, the source stream monitors measure radioactivity in effluent streams for which flow can be terminated; therefore, the source stream monitors have control logic to terminate the source stream release at the alarm setpoint.

3.3.3.1 Setpoint of the Monitor on the Source Stream

Step 1: Determine the concentration X_{is} of each noble gas radionuclide i in source stream s (in μCi/mL) according to the results of its required sample analyses [see Section 3.1.2].

Step 2: Determine r_t, the ratio of the dose rate limit for the total body, 500 mrem/y, to the total body dose rate due to noble gases detected in the source stream under consideration. Use the X_{is} values and the maximum anticipated source stream flowrate f_{as} in equation (3.2) to determine the total body dose rate for the source stream, substituting r_t for R_t.

The SITE BOUNDARY relative dispersion value used in Steps 2 and 3 for the source stream is the same as the $\overline{(X/Q)}_{vb}$ that applies to the respective merged stream. This is

because the $\overline{(X/Q)}$ value is determined by the meteorology of the plant site and the physical attributes of the release point, and is unaffected by whether or not a given source stream is operating.

Step 3: Determine r_k, the ratio of the dose rate limit for the skin, 3000 mrem/y, to the skin dose rate due to noble gases detected in the source stream under consideration. Use the X_{is} values and the maximum anticipated source stream flow rate f_{as} in equation (3.3) to determine the skin dose rate for the source stream, substituting r_k for R_k.

Step 4: Determine the maximum noble gas radioactivity monitor setpoint concentration, as follows:

$$c_{ns} = the \quad lesser \quad of \begin{cases} AG_s \cdot SF \cdot \sum_i X_{is} \cdot r_t \\ AG_s \cdot SF \cdot \sum_i X_{is} \cdot r_k \end{cases} \qquad \textbf{(3.5)}$$

where:

c_{ns} = the calculated setpoint (in µCi/mL) for the noble gas monitor serving gaseous source stream s.

AG_s = the administrative allocation factor applied to gaseous source stream s. For a given final release point v, the sum of all the AG_s values for source streams contributing to the final release point must not exceed the release point's allocation factor Ag_v.

X_{is} = the measured concentration of noble gas radionuclide i in gaseous source stream s, as defined in Step 1, in µCi/mL.

The values of r_t and r_k to be used in the calculation are those which were determined in Steps 2 and 3 above. The safety factor, SF, was defined previously.

Step 5: Determine whether the release is permissible, as follows:

If $c_{ns} \geq \sum_i X_{is}$, the release is permissible. However, if c_{ns} is within about 10 percent of $\sum_i X_{is}$, it may be impractical to use this value of c_{ns}. This situation indicates that measured concentrations are approaching values which would cause the limits of Section 3.1.2.a to be exceeded. Therefore, steps should be taken to reduce contributing source terms of gaseous radioactive material, or to adjust the allocation of the limits among the active release points. The setpoint calculations (steps 1–4) must then be repeated with parameters that reflect the modified conditions.

If $c_{ns} < \sum_i X_{is}$, the release may not be made as planned. Consider the alternatives discussed in the paragraph above, and calculate a new setpoint based on the results of the actions taken.

3.3.3.2 Effect on the Setpoint of the Monitor on the Merged Stream

Before beginning a release from a monitored source stream, a setpoint must be determined for the source stream monitor as presented in Section 3.3.3.1. In addition, whether or not the source stream has its own effluent monitor, the previously-determined maximum allowable setpoint for the downstream final monitor on the merged stream must be redetermined. This is accomplished by repeating the steps of Section 3.3.2, with the following modifications.

Modification 1: The new maximum anticipated flowrate of the merged stream is the sum of the old merged stream maximum flowrate, and the maximum flowrate of the source stream being considered for release.

$$(f_{av})_{new} = (f_{av})_{old} + f_{as} \qquad \textbf{(3.6)}$$

Modification 2: The new concentration of noble gas radionuclide i in the merged stream includes both the contribution of the merged stream *without* the source stream, *and* the source stream being considered for release.

$$(X_{iv})_{new} = \frac{(f_{av})_{old} \cdot (X_{iv})_{old} + f_{as} \cdot X_{is}}{(f_{av})_{new}} \qquad \textbf{(3.7)}$$

3.3.4 Determination of Allocation Factors, AG

When simultaneous gaseous releases are conducted, an administrative allocation factor must be applied to divide the release limit among the active gaseous release pathways. This is to assure that the dose rate limit for areas at and beyond the SITE BOUNDARY (see Section 3.1.2) will not be exceeded by simultaneous releases. The allocation factor for any pathway may be assigned any value between 0 and 1, under the following two conditions:

1. The sum of the allocation factors for all simultaneously-active *final* release paths at the plant site may not exceed 1.

2. The sum of the allocation factors for all simultaneously-active *source streams* merging into a given final release pathway may not exceed the allocation factor of that final release pathway.

Any of the following three methods may be used to assign the allocation factors to the active gaseous release pathways:

1. For ease of implementation, AG_v may be equal for all release pathways:

$$AG_v = \frac{1}{N} \qquad \textbf{(3.8)}$$

where:

N = the number of simultaneously active gaseous release pathways.

2. AG_v for a given release pathway may be selected based on an *estimate* of the portion of the total SITE BOUNDARY dose rate (from all simultaneous releases) that is contributed

by the release pathway. During periods when a given building or release pathway is not subject to gaseous radioactive releases, it may be assigned an allocation factor of zero.

3. AG_v for a given release pathway may be selected based on a *calculation* of the portion of the total SITE BOUNDARY dose rate that is contributed by the release pathway, as follows:

$$AGv = \frac{\left(\overline{X/Q}\right)_{vb} \sum_i (K_i Q_{iv})}{\sum_{r=1}^{N} \left[\left(\overline{X/Q}\right)_{rb} \sum_i (K_i Q_{ir}) \right]} \qquad \textbf{(3.9)}$$

where:

$\overline{(X/Q)}_{vb}$ = the annual average SITE BOUNDARY relative concentration applicable to the gaseous release pathway v for which the allocation factor is being determined, in s/m^3.

K_i = the total-body dose factor due to gamma emissions from noble gas radionuclide i, in (mrem/y)/(µCi/m^3), from Table 3-5.

Q_{iv} = the release rate of noble gas radionuclide i from release pathway v, in µCi/s, calculated as the product of X_{iv} and f_{av}, where:

X_{iv} = the concentration of noble gas radionuclide i applicable to the gaseous release pathway v for which the allocation factor is being determined, in µCi/mL.

f_{av} = the discharge flowrate applicable to gaseous release pathway v for which the allocation factor is being determined, in mL/s.

$\overline{(X/Q)}_{rb}$ = the annual average SITE BOUNDARY relative concentration applicable to active gaseous release pathway r, in s/m^3.

Q_{ir} = the release rate of noble gas radionuclide i applicable to active release pathway r, in µCi/s, calculated as the product of X_{ir} and f_{ar}, where:

X_{ir} = the concentration of noble gas radionuclide i applicable to active gaseous release pathway r, in µCi/mL.

f_{ar} = the discharge flowrate applicable to active gaseous release pathway r, in mL/s.

N = the number of simultaneously active gaseous release pathways (including pathway v that is of interest).

NOTE: Although equations (3.8) and (3.9) are written to illustrate the assignment of the allocation factors for final release pathways, they may also be used to assign allocation factors to the source streams that merge into a given final release pathway.

3.3.5 Setpoints for Noble Gas Monitors with Special Requirements

At present, VEGP has no noble gas monitors for which setpoint methodologies are to be presented in the ODCM, and that require methods other than those in Section 3.3.2 or Section 3.3.3.

3.3.6 Setpoints for Particulate and Iodine Monitors

In accordance with Section 5.1.1 of NRC NUREG-0133 (Reference 1), the effluent controls of Section 3.1.1 do not require that the ODCM establish setpoint calculation methods for particulate and iodine monitors. Therefore, the following is provided for information only: Initial setpoints for the particulate channels of effluent monitors RE–12442 and RE–2565 were determined as described in Reference 13.

3.4 GASEOUS EFFLUENT COMPLIANCE CALCULATIONS

3.4.1 Dose Rates at and Beyond the Site Boundary

Because the dose rate limits for areas at and beyond the SITE specified in Section 3.1.2 are *site* limits applicable at any instant in time, the summations extend over all simultaneously active gaseous final release pathways at the *plant site*. Table 3-4 identifies the gaseous final release pathways at the plant site, and indicates the $\overline{(X/Q)}_{vb}$ value for each.

3.4.1.1 Dose Rates Due to Noble Gases

For the purpose of implementing the controls of Section 3.1.2.a, the dose rates due to noble gas radionuclides in areas at or beyond the SITE BOUNDARY, due to releases of gaseous effluents, shall be calculated as follows:

For total body dose rates:

$$DR_t = \sum_v \left\{ \left(\overline{X/Q}\right)_{vb} \sum_i [K_i Q_{iv}] \right\} \quad \textbf{(3.10)}$$

For skin dose rates:

$$DR_k = \sum_v \left\{ \left(\overline{X/Q}\right)_{vb} \sum_i [(L_i + 1.1M_i) Q_{iv}] \right\} \quad \textbf{(3.11)}$$

where:

DR_t = the total body dose rate at the time of the release, in mrem/y.

DR_k = the skin dose rate at the time of the release, in mrem/y.

Q_{iv} = the release rate of noble gas radionuclide i, in µCi/s, equal to the product of f_{tv} and X_{iv}, where:

f_{tv} = the actual average flowrate for release pathway v during the period of the release, in mL/s.

All other terms were defined previously.

3.4.1.2 Dose Rates Due to Iodine-131, Iodine-133, Tritium, and Radionuclides in Particulate Form with Half-Lives Greater than 8 Days

For the purpose of implementing the controls of Section 3.1.2.b, the dose rates due to Iodine-131, Iodine-133, tritium, and all radionuclides in particulate form with half-lives greater than 8 days, in areas at or beyond the SITE BOUNDARY, due to releases of gaseous effluents, shall be calculated as follows:

$$DR_o = \sum_v \left\{ \left(\overline{X/Q}\right)_{vb} \sum_i [P_{io}\, Q'_{iv}] \right\} \quad \textbf{(3.12)}$$

where:

DR_o = the dose rate to organ o at the time of the release, in mrem/y.

P_{io} = the site-specific dose factor for radionuclide i and organ o, in (mrem/y)/(μCi/m^3). Since the dose rate limits specified in Section 3.1.2.b apply only to the child age group exposed to the inhalation pathway, the values of P_{io} may be obtained from Table 3-9, "R_{aipj} for Inhalation Pathway, Child Age Group."

Q'_{iv} = the release rate of radionuclide i from gaseous release pathway v, in μCi/s. For the purpose of implementing the controls of Section 3.1.2.b, only I–131, I–133, tritium, and all radionuclides in particulate form with half-lives greater than 8 days should be included in this calculation.

All other terms were defined previously.

3.4.2 Noble Gas Air Dose at or Beyond Site Boundary

For the purpose of implementing the controls of Section 3.1.3, air doses in areas at or beyond the SITE BOUNDARY due to releases of noble gases from each unit shall be calculated as follows (adapted from Reference 1, page 28, by including only long-term releases):

$$D_\beta = 3.17 \times 10^{-8} \sum_v \left\{ \left(\overline{X/Q}\right)_{vb} \sum_i \left[N_i \cdot \tilde{Q}_{iv} \right] \right\} \quad \textbf{(3.13)}$$

$$D_\gamma = 3.17 \times 10^{-8} \sum_v \left\{ \left(\overline{X/Q}\right)_{vb} \sum_i \left[M_i \cdot \tilde{Q}_{iv} \right] \right\} \quad \textbf{(3.14)}$$

where:

3.17×10^{-8} = a units conversion factor: 1 y/(3.15×10^7 s).

D_β = the air dose due to beta emissions from noble gas radionuclides, in mrad.

D_γ = the air dose due to gamma emissions from noble gas radionuclides, in mrad.

N_i = the air dose factor due to beta emissions from noble gas radionuclide i (mrad/y)/(μCi/m^3), from Table 3-5.

M_i = the air dose factor due to gamma emissions from noble gas radionuclide i (mrad/y)/(μCi/m^3), from Table 3-5.

$\tilde{Q}_{iv}$ = the cumulative release of noble gas radionuclide i from release pathway v (μCi), during the period of interest.

and all other terms are as defined above.

Because the air dose limit is on a per-reactor-unit basis, the summations extend over all gaseous final release pathways for a given *unit*. For a release pathway discharging materials originating in both reactor units, the activity discharged from the release point may be apportioned to the two

units in any reasonable manner, provided that all activity released via the particular shared release pathway is apportioned to one or the other unit.

The gaseous final release pathways at the plant site, and the $\overline{(X/Q)}_{vb}$ for each, are identified in Table 3-4.

Table 3-5. Dose Factors for Exposure to a Semi-Infinite Cloud of Noble Gases

Nuclide	γ - Body (K) (mrem/y) per (μCi/m^3)	β - Skin (L) (mrem/y) per (μCi/m^3)	γ - Air (M) (mrad/y) per (μCi/m^3)	β - Air (N) (mrad/y) per (μCi/m^3)
Kr-83m	7.56 E-02	0.00 E+00	1.93 E+01	2.88 E+02
Kr-85m	1.17 E+03	1.46 E+03	1.23 E+03	1.97 E+03
Kr-85	1.61 E+01	1.34 E+03	1.72 E+01	1.95 E+03
Kr-87	5.92 E+03	9.73 E+03	6.17 E+03	1.03 E+04
Kr-88	1.47 E+04	2.37 E+03	1.52 E+04	2.93 E+03
Kr-89	1.66 E+04	1.01 E+04	1.73 E+04	1.06 E+04
Kr-90	1.56 E+04	7.29 E+03	1.63 E+04	7.83 E+03
Xe-131m	9.15 E+01	4.76 E+02	1.56 E+02	1.11 E+03
Xe-133m	2.51 E+02	9.94 E+02	3.27 E+02	1.48 E+03
Xe-133	2.94 E+02	3.06 E+02	3.53 E+02	1.05 E+03
Xe-135m	3.12 E+03	7.11 E+02	3.36 E+03	7.39 E+02
Xe-135	1.81 E+03	1.86 E+03	1.92 E+03	2.46 E+03
Xe-137	1.42 E+03	1.22 E+04	1.51 E+03	1.27 E+04
Xe-138	8.83 E+03	4.13 E+03	9.21 E+03	4.75 E+03
Ar-41	8.84 E+03	2.69 E+03	9.30 E+03	3.28 E+03

All values in this table were obtained from Reference 3 (Table B-1), with units converted.

Table 3-6. Dose Factors for Exposure to Direct Radiation from Noble Gases in an Elevated Finite Plume

The contents of this table are not applicable to VEGP.

3.4.3 Dose to a Member of the Public at or Beyond Site Boundary

The dose received by an individual due to gaseous releases from each reactor unit, to areas at or beyond the SITE BOUNDARY, depends on the individual's location, age group, and exposure pathways. The MEMBER OF THE PUBLIC expected to receive the highest dose in the plant vicinity is referred to as the controlling receptor. The dosimetrically-significant attributes of the currently-defined controlling receptor are presented in Table 3-7.

Doses to a MEMBER OF THE PUBLIC due to gaseous releases of I–131, I–133, tritium, and all radionuclides in particulate form from each unit shall be calculated as follows (equation adapted from Reference 1, page 29, by considering only long-term releases):

$$D_{ja} = 3.17 \times 10^{-8} \sum_{p} \left\{ \sum_{i} R_{aipj} \sum_{v} \left[W_{vip} \cdot \tilde{Q}'_{iv} \right] \right\} \qquad \textbf{(3.15)}$$

where:

D_{ja} = the dose to organ j of an individual in age group a, due to gaseous releases of I–131, I–133, tritium, and all radionuclides in particulate form with half-lives greater than 8 days, in mrem.

3.17×10^{-8} = a units conversion factor: 1 y/(3.15×10^{7} s).

R_{aipj} = the site-specific dose factor for age group a, radionuclide i, exposure pathway p, and organ j. For the purpose of implementing the controls of Section 3.1.4, the exposure pathways applicable to calculating the dose to the currently-defined controlling receptor are included in Table 3-7; values of R_{aipj} for each exposure pathway and radionuclide applicable to calculations of dose to the controlling receptor are included in Tables 3-8 through 3-12.

A detailed discussion of the methods and parameters used for calculating R_{aipj} for the plant site is presented in Chapter 9. That information may be used for recalculating the R_{aipj} values if the underlying parameters change, or for calculating R_{aipj} values for special radionuclides and age groups when performing the assessments discussed in Section 3.4.4 below.

W_{vip} = the annual average relative dispersion or deposition at the location of the controlling receptor, for release pathway v, as appropriate to exposure pathway p and radionuclide i.

For all tritium pathways, and for the inhalation of any radionuclide: W_{vip} is $\overline{(X/Q)}_{vp}$, the annual average relative dispersion factor for release pathway v, at the location of the controlling receptor (s/m^3). For the ground-plane exposure pathway, and for all ingestion-related pathways for radionuclides other than tritium: W_{vip} is $\overline{(D/Q)}_{vp}$, the annual average relative deposition factor for release pathway v, at the location of the controlling receptor (m^{-2}). Values of $\overline{(X/Q)}_{vp}$ and $\overline{(D/Q)}_{vp}$ for use in calculating the dose to the currently-defined controlling receptor are included in Table 3-7.

$\tilde{Q}'_{iv}$ = the cumulative release of radionuclide i from release pathway v, during the period of interest (μCi). For the purpose of implementing the controls of Section 3.1.4, only I–131, I–133, tritium, and all radionuclides in particulate form with half-lives greater than 8 days should be included in this calculation. In any dose assessment using the methods of this subsection, only radionuclides detectable above background in their respective samples should be included in the calculation.

Because the member of the public dose limit is on a per-unit basis, the summations extend over all gaseous final release pathways for a given *unit*. For a release pathway discharging materials originating in both reactor units, the activity discharged from the release point may be apportioned between the two units in any reasonable manner, provided that all activity released from the plant site is apportioned to one or the other unit.

The gaseous final release pathways at the plant site, and the release elevation for each, are identified in Table 3-4.

Table 3-7. Attributes of the Controlling Receptor

The locations of members of the public in the vicinity of the plant site, and the exposure pathways associated with those locations, are determined in the Annual Land Use Census. Dispersion and deposition values were calculated based on site meteorological data collected for the period January 1, 1985 through December 31, 1987.

Based on an analysis of this information, the current controlling receptor for the plant site is described as follows.

Sector: WSW

Distance: 1.2 miles

Age Group: Child

Exposure Pathways: Inhalation, ground plane, cow meat, and garden vegetation

Dispersion Factors $\overline{(X/Q)}_{vb}$:

Ground-Level release points:	6.20 E-7 s/m^3
Mixed-Mode release points:	1.27 E-7 s/m^3

Deposition Factors $\overline{(D/Q)}_{vb}$:

Ground-Level release points:	2.80 E-9 m^{-2}
Mixed-Mode release points:	9.90 E-10 m^{-2}

3.4.4 Dose Calculations to Support Other Requirements

Case 1: A radiological impact assessment may be required to support evaluation of a reportable event.

Dose calculations may be performed using the equations in Section 3.4.3, with the substitution of the dispersion and deposition parameters [(X/Q) and (D/Q)] for the period covered by the report, and using the appropriate pathway dose factors (R_{aipj}) for the receptor of interest. Methods for calculating (X/Q) and (D/Q) from meteorological data are presented in Chapter 8.

Values of R_{aipj} other than those presented in Tables 3-8 through 3-12 may need to be calculated. Methods and parameters for calculating values of R_{aipj} are presented in Chapter 9. When calculating R_{aipj} for evaluation of an event, pathway and usage factors specific to the receptor involved in the event may be used in place of the values in Chapter 9, if the specific values are known.

Case 2: A dose calculation is required to evaluate the results of the Land Use Census, under the provisions of Section 4.1.2.

In the event that the Land Use Census reveals that exposure pathways have changed at previously-identified locations, or if new locations are identified, it may be necessary to calculate doses at two or more locations to determine which should be designated as the controlling receptor. Such dose calculations may be performed using the equations in Section 3.4.3, with the substitution of the annual average dispersion and deposition values [$\overline{(X/Q)}$ and $\overline{(D/Q)}$] for the locations of interest, and using the appropriate pathway dose factors (R_{aipj}) for the receptors of interest.

Methods for calculating (X/Q) and (D/Q) from meteorological data are presented in Chapter 8. The values of R_{aipj} other than those presented in Tables 3-8 through 3-12 may need to be calculated. Methods and parameters for calculating values of R_{aipj} are presented in Chapter 9.

Case 3: Under Section 5.2, a dose calculation may be required to support the determination of a component of the total dose to a receptor other than that currently defined as the controlling receptor.

Dose calculations would be performed using the equations in Section 3.4.3, with the dispersion and deposition parameters and appropriate values of (R_{aipj}) for the receptor of interest.

Appropriate values of the dispersion and deposition parameters, if not found in Table 3-7, would need to be calculated. Methods for calculating (X/Q) and (D/Q) from meterological data are presented in Chapter 8.

Appropriate values of R_{aipj}, if not found in Tables 3-8 through 3-12, would need to be calculated. Methods and parameters for calculating values of R_{aipj} are presented in Chapter 9.

Table 3-8. R_{aipj} for Ground Plane Pathway, All Age Groups

Nuclide	T. Body	Skin
H-3	0.00	0.00
C-14	0.00	0.00
P-32	0.00	0.00
Cr-51	4.66E+06	5.51E+06
Mn-54	1.39E+09	1.63E+09
Fe-55	0.00	0.00
Fe-59	2.73E+08	3.21E+08
Co-58	3.79E+08	4.44E+08
Co-60	2.15E+10	2.53E+10
Ni-63	0.00	0.00
Zn-65	7.47E+08	8.59E+08
Rb-86	8.99E+06	1.03E+07
Sr-89	2.16E+04	2.51E+04
Sr-90	0.00	0.00
Y-91	1.07E+06	1.21E+06
Zr-95	2.45E+08	2.84E+08
Nb-95	1.37E+08	1.61E+08
Ru-103	1.08E+08	1.26E+08
Ru-106	4.22E+08	5.07E+08
Ag-110m	3.44E+09	4.01E+09
Sb-124	5.98E+08	6.90E+08
Sb-125	2.34E+09	2.64E+09
Te-125m	1.55E+06	2.13E+06
Te-127m	9.16E+04	1.08E+05
Te-129m	1.98E+07	2.31E+07
I-131	1.72E+07	2.09E+07
I-133	2.45E+06	2.98E+06
Cs-134	6.86E+09	8.00E+09
Cs-136	1.51E+08	1.71E+08
Cs-137	1.03E+10	1.20E+10
Ba-140	2.05E+07	2.35E+07
Ce-141	1.37E+07	1.54E+07
Ce-144	6.95E+07	8.04E+07
Pr-143	0.00	0.00
Nd-147	8.39E+06	1.01E+07

1. Units are $m^2 \cdot (mrem/yr)/(\mu Ci/s)$.
2. The values in the Total Body column also apply to the Bone, Liver, Thyroid, Kidney, Lung, and GI-LLI organs.
3. This table also supports the calculations of section 6.2.

Table 3-9. R_{aipj} for Inhalation Pathway, Child Age Group

Nuclide	Bone	Liver	T. Body	Thyroid	Kidney	Lung	GI-LLI
H-3	0.00	1.12E+03	1.12E+03	1.12E+03	1.12E+03	1.12E+03	1.12E+03
C-14	3.59E+04	6.73E+03	6.73E+03	6.73E+03	6.73E+03	6.73E+03	6.73E+03
P-32	2.60E+06	1.14E+05	9.88E+04	0.00	0.00	0.00	4.22E+04
Cr-51	0.00	0.00	1.54E+02	8.55E+01	2.43E+01	1.70E+04	1.08E+03
Mn-54	0.00	4.29E+04	9.51E+03	0.00	1.00E+04	1.58E+06	2.29E+04
Fe-55	4.74E+04	2.52E+04	7.77E+03	0.00	0.00	1.11E+05	2.87E+03
Fe-59	2.07E+04	3.34E+04	1.67E+04	0.00	0.00	1.27E+06	7.07E+04
Co-58	0.00	1.77E+03	3.16E+03	0.00	0.00	1.11E+06	3.44E+04
Co-60	0.00	1.31E+04	2.26E+04	0.00	0.00	7.07E+06	9.62E+04
Ni-63	8.21E+05	4.63E+04	2.80E+04	0.00	0.00	2.75E+05	6.33E+03
Zn-65	4.26E+04	1.13E+05	7.03E+04	0.00	7.14E+04	9.95E+05	1.63E+04
Rb-86	0.00	1.98E+05	1.14E+05	0.00	0.00	0.00	7.99E+03
Sr-89	5.99E+05	0.00	1.72E+04	0.00	0.00	2.16E+06	1.67E+05
Sr-90	1.01E+08	0.00	6.44E+06	0.00	0.00	1.48E+07	3.43E+05
Y-91	9.14E+05	0.00	2.44E+04	0.00	0.00	2.63E+06	1.84E+05
Zr-95	1.90E+05	4.18E+04	3.70E+04	0.00	5.96E+04	2.23E+06	6.11E+04
Nb-95	2.35E+04	9.18E+03	6.55E+03	0.00	8.62E+03	6.14E+05	3.70E+04
Ru-103	2.79E+03	0.00	1.07E+03	0.00	7.03E+03	6.62E+05	4.48E+04
Ru-106	1.36E+05	0.00	1.69E+04	0.00	1.84E+05	1.43E+07	4.29E+05
Ag-110m	1.69E+04	1.14E+04	9.14E+03	0.00	2.12E+04	5.48E+06	1.00E+05
Sb-124	0.00	0.00	0.00	0.00	0.00	0.00	0.00
Sb-125	0.00	0.00	0.00	0.00	0.00	0.00	0.00
Te-125m	6.73E+03	2.33E+03	9.14E+02	1.92E+03	0.00	4.77E+05	3.38E+04
Te-127m	2.49E+04	8.55E+03	3.02E+03	6.07E+03	6.36E+04	1.48E+06	7.14E+04
Te-129m	1.92E+04	6.85E+03	3.04E+03	6.33E+03	5.03E+04	1.76E+06	1.82E+05
I-131	4.81E+04	4.81E+04	2.73E+04	1.62E+07	7.88E+04	0.00	2.84E+03
I-133	1.66E+04	2.03E+04	7.70E+03	3.85E+06	3.38E+04	0.00	5.48E+03
Cs-134	6.51E+05	1.01E+06	2.25E+05	0.00	3.30E+05	1.21E+05	3.85E+03
Cs-136	6.51E+04	1.71E+05	1.16E+05	0.00	9.55E+04	1.45E+04	4.18E+03
Cs-137	9.07E+05	8.25E+05	1.28E+05	0.00	2.82E+05	1.04E+05	3.62E+03
Ba-140	7.40E+04	6.48E+01	4.33E+03	0.00	2.11E+01	1.74E+06	1.02E+05
Ce-141	3.92E+04	1.95E+04	2.90E+03	0.00	8.55E+03	5.44E+05	5.66E+04
Ce-144	6.77E+06	2.12E+06	3.61E+05	0.00	1.17E+06	1.20E+07	3.89E+05
Pr-143	1.85E+04	5.55E+03	9.14E+02	0.00	3.00E+03	4.33E+05	9.73E+04
Nd-147	1.08E+04	8.73E+03	6.81E+02	0.00	4.81E+03	3.28E+05	8.21E+04

1. Units are (mrem/yr)/(μCi/m^3) for all radionuclides.
2. This table also supports the calculations of section 6.2.

Table 3-10. R_{aipj} for Inhalation Pathway, Adult Age Group

Nuclide	Bone	Liver	T. Body	Thyroid	Kidney	Lung	GI-LLI
H-3	0.00	1.26E+03	1.26E+03	1.26E+03	1.26E+03	1.26E+03	1.26E+03
C-14	1.82E+04	3.41E+03	3.41E+03	3.41E+03	3.41E+03	3.41E+03	3.41E+03
P-32	1.32E+06	7.71E+04	5.01E+04	0.00	0.00	0.00	8.64E+04
Cr-51	0.00	0.00	1.00E+02	5.95E+01	2.28E+01	1.44E+04	3.32E+03
Mn-54	0.00	3.96E+04	6.30E+03	0.00	9.84E+03	1.40E+06	7.74E+04
Fe-55	2.46E+04	1.70E+04	3.94E+03	0.00	0.00	7.21E+04	6.03E+03
Fe-59	1.18E+04	2.78E+04	1.06E+04	0.00	0.00	1.02E+06	1.88E+05
Co-58	0.00	1.58E+03	2.07E+03	0.00	0.00	9.28E+05	1.06E+05
Co-60	0.00	1.15E+04	1.48E+04	0.00	0.00	5.97E+06	2.85E+05
Ni-63	4.32E+05	3.14E+04	1.45E+04	0.00	0.00	1.78E+05	1.34E+04
Zn-65	3.24E+04	1.03E+05	4.66E+04	0.00	6.90E+04	8.64E+05	5.34E+04
Rb-86	0.00	1.35E+05	5.90E+04	0.00	0.00	0.00	1.66E+04
Sr-89	3.04E+05	0.00	8.72E+03	0.00	0.00	1.40E+06	3.50E+05
Sr-90	9.92E+07	0.00	6.10E+06	0.00	0.00	9.60E+06	7.22E+05
Y-91	4.62E+05	0.00	1.24E+04	0.00	0.00	1.70E+06	3.85E+05
Zr-95	1.07E+05	3.44E+04	2.33E+04	0.00	5.42E+04	1.77E+06	1.50E+05
Nb-95	1.41E+04	7.82E+03	4.21E+03	0.00	7.74E+03	5.05E+05	1.04E+05
Ru-103	1.53E+03	0.00	6.58E+02	0.00	5.83E+03	5.05E+05	1.10E+05
Ru-106	6.91E+04	0.00	8.72E+03	0.00	1.34E+05	9.36E+06	9.12E+05
Ag-110m	1.08E+04	1.00E+04	5.94E+03	0.00	1.97E+04	4.63E+06	3.02E+05
Sb-124	3.12E+04	5.89E+02	1.24E+04	7.55E+01	0.00	2.48E+06	4.06E+05
Sb-125	6.61E+04	7.13E+02	1.33E+04	5.87E+01	0.00	2.20E+06	1.01E+05
Te-125m	3.42E+03	1.58E+03	4.67E+02	1.05E+03	1.24E+04	3.14E+05	7.06E+04
Te-127m	1.26E+04	5.77E+03	1.57E+03	3.29E+03	4.58E+04	9.60E+05	1.50E+05
Te-129m	9.76E+03	4.67E+03	1.58E+03	3.44E+03	3.66E+04	1.16E+06	3.83E+05
I-131	2.52E+04	3.58E+04	2.05E+04	1.19E+07	6.13E+04	0.00	6.28E+03
I-133	8.64E+03	1.48E+04	4.52E+03	2.15E+06	2.58E+04	0.00	8.88E+03
Cs-134	3.73E+05	8.48E+05	7.28E+05	0.00	2.87E+05	9.76E+04	1.04E+04
Cs-136	3.90E+04	1.46E+05	1.10E+05	0.00	8.56E+04	1.20E+04	1.17E+04
Cs-137	4.78E+05	6.21E+05	4.28E+05	0.00	2.22E+05	7.52E+04	8.40E+03
Ba-140	3.90E+04	4.90E+01	2.57E+03	0.00	1.67E+01	1.27E+06	2.18E+05
Ce-141	1.99E+04	1.35E+04	1.53E+03	0.00	6.26E+03	3.62E+05	1.20E+05
Ce-144	3.43E+06	1.43E+06	1.84E+05	0.00	8.48E+05	7.78E+06	8.16E+05
Pr-143	9.36E+03	3.75E+03	4.64E+02	0.00	2.16E+03	2.81E+05	2.00E+05
Nd-147	5.27E+03	6.10E+03	3.65E+02	0.00	3.56E+03	2.21E+05	1.73E+05

1. Units are (mrem/yr)/(μCi/m^3) for all radionuclides.
2. This table is included to support the calculations of section 6.2.

Table 3-11. R_{aipj} for Cow Meat Pathway, Child Age Group

Nuclide	Bone	Liver	T. Body	Thyroid	Kidney	Lung	GI-LLI
H-3	0.00	2.34E+02	2.34E+02	2.34E+02	2.34E+02	2.34E+02	2.34E+02
C-14	5.29E+05	1.06E+05	1.06E+05	1.06E+05	1.06E+05	1.06E+05	1.06E+05
P-32	7.41E+09	3.47E+08	2.86E+08	0.00	0.00	0.00	2.05E+08
Cr-51	0.00	0.00	8.79E+03	4.88E+03	1.33E+03	8.91E+03	4.66E+05
Mn-54	0.00	8.01E+06	2.13E+06	0.00	2.25E+06	0.00	6.72E+06
Fe-55	4.57E+08	2.42E+08	7.51E+07	0.00	0.00	1.37E+08	4.49E+07
Fe-59	3.76E+08	6.09E+08	3.03E+08	0.00	0.00	1.77E+08	6.34E+08
Co-58	0.00	1.64E+07	5.02E+07	0.00	0.00	0.00	9.58E+07
Co-60	0.00	6.93E+07	2.04E+08	0.00	0.00	0.00	3.84E+08
Ni-63	2.91E+10	1.56E+09	9.91E+08	0.00	0.00	0.00	1.05E+08
Zn-65	3.75E+08	1.00E+09	6.22E+08	0.00	6.30E+08	0.00	1.76E+08
Rb-86	0.00	5.77E+08	3.55E+08	0.00	0.00	0.00	3.71E+07
Sr-89	4.82E+08	0.00	1.38E+07	0.00	0.00	0.00	1.87E+07
Sr-90	1.04E+10	0.00	2.64E+09	0.00	0.00	0.00	1.40E+08
Y-91	1.80E+06	0.00	4.82E+04	0.00	0.00	0.00	2.40E+08
Zr-95	2.66E+06	5.85E+05	5.21E+05	0.00	8.38E+05	0.00	6.11E+08
Nb-95	3.10E+06	1.21E+06	8.62E+05	0.00	1.13E+06	0.00	2.23E+09
Ru-103	1.55E+08	0.00	5.96E+07	0.00	3.90E+08	0.00	4.01E+09
Ru-106	4.44E+09	0.00	5.54E+08	0.00	5.99E+09	0.00	6.90E+10
Ag-110m	8.39E+06	5.67E+06	4.53E+06	0.00	1.06E+07	0.00	6.74E+08
Sb-124	0.00	0.00	0.00	0.00	0.00	0.00	0.00
Sb-125	0.00	0.00	0.00	0.00	0.00	0.00	0.00
Te-125m	5.69E+08	1.54E+08	7.59E+07	1.60E+08	0.00	0.00	5.49E+08
Te-127m	1.77E+09	4.78E+08	2.11E+08	4.24E+08	5.06E+09	0.00	1.44E+09
Te-129m	1.79E+09	5.00E+08	2.78E+08	5.77E+08	5.26E+09	0.00	2.18E+09
I-131	1.65E+07	1.66E+07	9.46E+06	5.50E+09	2.73E+07	0.00	1.48E+06
I-133	5.67E-01	7.02E-01	2.66E-01	1.30E+02	1.17E+00	0.00	2.83E-01
Cs-134	9.22E+08	1.51E+09	3.19E+08	0.00	4.69E+08	1.68E+08	8.16E+06
Cs-136	1.62E+07	4.46E+07	2.88E+07	0.00	2.37E+07	3.54E+06	1.57E+06
Cs-137	1.33E+09	1.28E+09	1.88E+08	0.00	4.16E+08	1.50E+08	7.99E+06
Ba-140	4.38E+07	3.84E+04	2.56E+06	0.00	1.25E+04	2.29E+04	2.22E+07
Ce-141	2.22E+04	1.11E+04	1.64E+03	0.00	4.86E+03	0.00	1.38E+07
Ce-144	2.32E+06	7.26E+05	1.24E+05	0.00	4.02E+05	0.00	1.89E+08
Pr-143	3.34E+04	1.00E+04	1.66E+03	0.00	5.43E+03	0.00	3.60E+07
Nd-147	1.17E+04	9.47E+03	7.33E+02	0.00	5.19E+03	0.00	1.50E+07

Units are (mrem/yr)/(μCi/m^3) for tritium, and m^2·(mrem/yr)/(μCi/s) for all other radionuclides.

Table 3-12. R_{aipj} for Garden Vegetation Pathway, Child Age Group

Nuclide	Bone	Liver	T.Body	Thyroid	Kidney	Lung	GI-LLI
H-3	0.00	4.01E+03	4.01E+03	4.01E+03	4.01E+03	4.01E+03	4.01E+03
C-14	8.89E+08	1.78E+08	1.78E+08	1.78E+08	1.78E+08	1.78E+08	1.78E+08
P-32	3.37E+09	1.58E+08	1.30E+08	0.00	0.00	0.00	9.31E+07
Cr-51	0.00	0.00	1.17E+05	6.50E+04	1.78E+04	1.19E+05	6.21E+06
Mn-54	0.00	6.65E+08	1.77E+08	0.00	1.86E+08	0.00	5.58E+08
Fe-55	8.01E+08	4.25E+08	1.32E+08	0.00	0.00	2.40E+08	7.87E+07
Fe-59	3.98E+08	6.43E+08	3.20E+08	0.00	0.00	1.86E+08	6.70E+08
Co-58	0.00	6.44E+07	1.97E+08	0.00	0.00	0.00	3.76E+08
Co-60	0.00	3.78E+08	1.12E+09	0.00	0.00	0.00	2.10E+09
Ni-63	3.95E+10	2.11E+09	1.34E+09	0.00	0.00	0.00	1.42E+08
Zn-65	8.13E+08	2.16E+09	1.35E+09	0.00	1.36E+09	0.00	3.80E+08
Rb-86	0.00	4.52E+08	2.78E+08	0.00	0.00	0.00	2.91E+07
Sr-89	3.60E+10	0.00	1.03E+09	0.00	0.00	0.00	1.39E+09
Sr-90	1.24E+12	0.00	3.15E+11	0.00	0.00	0.00	1.67E+10
Y-91	1.86E+07	0.00	4.99E+05	0.00	0.00	0.00	2.48E+09
Zr-95	3.86E+06	8.48E+05	7.55E+05	0.00	1.21E+06	0.00	8.85E+08
Nb-95	4.10E+05	1.60E+05	1.14E+05	0.00	1.50E+05	0.00	2.96E+08
Ru-103	1.53E+07	0.00	5.90E+06	0.00	3.86E+07	0.00	3.97E+08
Ru-106	7.45E+08	0.00	9.30E+07	0.00	1.01E+09	0.00	1.16E+10
Ag-110m	3.21E+07	2.17E+07	1.73E+07	0.00	4.04E+07	0.00	2.58E+09
Sb-124	0.00	0.00	0.00	0.00	0.00	0.00	0.00
Sb-125	0.00	0.00	0.00	0.00	0.00	0.00	0.00
Te-125m	3.51E+08	9.50E+07	4.67E+07	9.84E+07	0.00	0.00	3.38E+08
Te-127m	1.32E+09	3.56E+08	1.57E+08	3.16E+08	3.77E+09	0.00	1.07E+09
Te-129m	8.41E+08	2.35E+08	1.31E+08	2.71E+08	2.47E+09	0.00	1.03E+09
I-131	1.43E+08	1.44E+08	8.17E+07	4.75E+10	2.36E+08	0.00	1.28E+07
I-133	3.53E+06	4.37E+06	1.65E+06	8.11E+08	7.28E+06	0.00	1.76E+06
Cs-134	1.60E+10	2.63E+10	5.55E+09	0.00	8.15E+09	2.93E+09	1.42E+08
Cs-136	8.24E+07	2.27E+08	1.47E+08	0.00	1.21E+08	1.80E+07	7.96E+06
Cs-137	2.39E+10	2.29E+10	3.38E+09	0.00	7.46E+09	2.68E+09	1.43E+08
Ba-140	2.77E+08	2.42E+05	1.61E+07	0.00	7.89E+04	1.45E+05	1.40E+08
Ce-141	6.56E+05	3.27E+05	4.86E+04	0.00	1.43E+05	0.00	4.08E+08
Ce-144	1.27E+08	3.98E+07	6.78E+06	0.00	2.21E+07	0.00	1.04E+10
Pr-143	1.46E+05	4.37E+04	7.23E+03	0.00	2.37E+04	0.00	1.57E+08
Nd-147	7.15E+04	5.79E+04	4.48E+03	0.00	3.18E+04	0.00	9.17E+07

Units are (mrem/yr)/(μCi/m^3) for tritium, and m^2·(mrem/yr)/(μCi/s) for all other radionuclides.

3.5 GASEOUS EFFLUENT DOSE PROJECTIONS

3.5.1 Thirty-One Day Dose Projections

In order to meet the requirements of the limit for operation of the gaseous radwaste treatment system (see Section 3.1.5), dose projections must be made at least once each 31 days; this applies during periods in which a discharge to areas at or beyond the SITE BOUNDARY of gaseous effluents containing radioactive materials occurs or is expected.

Projected 31–day air doses and doses to individuals due to gaseous effluents may be determined as follows:

For air doses:

$$D_{\beta p} = \left(\frac{D_{\beta c}}{t}\right) \times 31 + D_{\beta a}$$

$$D_{\gamma p} = \left(\frac{D_{\gamma c}}{t}\right) \times 31 + D_{\gamma a} \qquad \textbf{(3.16)}$$

For individual doses:

$$D_{op} = \left(\frac{D_{oc}}{t}\right) \times 31 + D_{oa} \qquad \textbf{(3.17)}$$

where:

$D_{\beta p}$ = the projected air dose due to beta emissions from noble gases, for the next 31 days of gaseous releases.

$D_{\beta c}$ = the cumulative air dose due to beta emissions from noble gas releases that have occurred in the elapsed portion of the current quarter, plus the release under consideration.

$D_{\beta a}$ = the anticipated air dose due to beta emissions from noble gas releases, contributed by any planned activities during the next 31–day period, if those activities will result in gaseous releases that are in addition to routine gaseous effluents. If only routine gaseous effluents are anticipated, $D_{\beta a}$ may be set to zero.

$D_{\gamma p}$ = the projected air dose due to gamma emissions from noble gases for the next 31 days of gaseous releases.

$D_{\gamma c}$ = the cumulative air dose due to gamma emissions from noble gas releases that have occurred in the elapsed portion of the current quarter, plus the release under consideration.

$D_{\gamma a}$ = the anticipated air dose due to gamma emissions from noble gas releases, contributed by any planned activities during the next 31–day period, if those activities will result in gaseous releases that are in addition to routine gaseous effluents. If only routine gaseous effluents are anticipated, $D_{\gamma a}$ may be set to zero.

D_{op} = the projected dose to the total body or organ o, due to releases of I–131, I-133, tritium, and particulates for the next 31 days of gaseous releases.

D_{oc} = the cumulative dose to the total body or organ o, due to releases of I–131, I-133, tritium, and particulates that have occurred in the elapsed portion of the current quarter, plus the release under consideration.

D_{oa} = the anticipated dose to the total body or organ o, due to releases of I–131, I-133, tritium, and particulates, contributed by any planned activities during the next 31–day period, if those activities will result in gaseous releases that are in addition to routine gaseous effluents. If only routine gaseous effluents are anticipated, D_{oa} may be set to zero.

t = the number of whole or partial days elapsed into the current quarter, including the time to the end of the release under consideration (even if the release continues into the next quarter).

3.5.2 Dose Projections for Specific Releases

Dose projections may be performed for a particular release by performing a pre-release dose calculation assuming that the planned release will proceed as anticipated. For air dose and individual dose projections due to gaseous effluent releases, follow the methodology of Section 3.4, using sample analysis results for the gaseous stream to be released, and parameter values expected to exist during the release period.

3.6 DEFINITIONS OF GASEOUS EFFLUENT TERMS

Term	Definition	Section of Initial Use
AG =	the administrative allocation factor for gaseous streams, applied to divide the gaseous release limit among all the release pathways [unitless].	3.3.2.1
AG_s =	the administrative allocation factor for gaseous source stream s, applied to divide the gaseous release limit among all the release pathways [unitless].	3.3.3
AG_v =	the administrative allocation factor for gaseous release pathway v, applied to divide the gaseous release limit among all the release pathways [unitless].	3.3.2.2
c =	the setpoint of the radioactivity monitor measuring the concentration of radioactivity in the effluent line prior to release [μCi/mL].	3.3.2.1
c_{ns} =	the calculated noble gas effluent monitor setpoint for gaseous source stream s [μCi/mL].	3.3.3
c_{nv} =	the calculated noble gas effluent monitor setpoint for release pathway v [μCi/mL].	3.3.2.2
D_{ja} =	the dose to organ j of an individual in age group a, due to gaseous releases of I–131, I–133, tritium, and radionuclides in particulate form with half-lives greater than 8 days [mrem].	3.4.3
D_{oa} =	the anticipated dose to organ o due to releases of non-noble-gas radionuclides, contributed by any planned activities during the next 31–day period [mrem].	3.5.1
D_{oc} =	the cumulative dose to organ o due to releases of non-noble-gas radionuclides that have occurred in the elapsed portion of the current quarter, plus the release under consideration [mrem].	3.5.1
D_{op} =	the projected dose to organ o due to the next 31 days of gaseous releases of non-noble-gas radionuclides [mrem].	3.5.1
D_{β} =	the air dose due to beta emissions from noble gas radionuclides [mrad].	3.4.2
$D_{\beta a}$ =	the anticipated air dose due to beta emissions from noble gas releases, contributed by any planned activities during the next 31–day period [mrad].	3.5.1

Term	Definition	Section of Initial Use
$D_{\beta c}$ =	the cumulative air dose due to beta emissions from noble gas releases that have occurred in the elapsed portion of the current quarter, plus the release under consideration [mrad].	3.5.1
$D_{\beta p}$ =	the projected air dose due to beta emissions from noble gases, for the next 31 days of gaseous releases [mrad].	3.5.1
$D_{\gamma=}$	the air dose due to gamma emissions from noble gas radionuclides [mrad].	3.4.2
$D_{\gamma a}$ =	the anticipated air dose due to gamma emissions from noble gas releases, contributed by any planned activities during the next 31–day period [mrad].	3.5.1
$D_{\gamma c}$ =	the cumulative air dose due to gamma emissions from noble gas releases that have occurred in the elapsed portion of the current quarter, plus the release under consideration [mrad].	3.5.1
$D\gamma_p$ =	the projected air dose due to gamma emissions from noble gases, for the next 31 days of gaseous releases [mrad].	3.5.1
$(\overline{D/Q})_{vp}$ =	the annual average relative deposition factor for release pathway v, at the location of the controlling receptor, from Table 3-7 [m^{-2}].	3.4.3
DR_k =	the skin dose rate at the time of the release [mrem/y].	3.4.1.1
DR_o =	the dose rate to organ o at the time of the release [mrem/y].	3.4.1.2
DR_t =	the total body dose rate at the time of the release [mrem/y].	3.4.1.1
f_{av} =	the maximum anticipated actual discharge flowrate for release pathway v during the period of the planned release [mL/s].	3.3.2.2
f_{as} =	the maximum anticipated actual discharge flowrate for gaseous source stream s during the period of the planned release [mL/s].	3.3.3
K_i =	the total body dose factor due to gamma emissions from noble gas radionuclide i, from Table 3-5 [(mrem/y)/(μCi/m^3)].	3.3.2.2
L_i =	the skin dose factor due to beta emissions from noble gas radionuclide i, from Table 3-5 [(mrem/y)/(μCi/m^3)].	3.3.2.2
M_i =	the air dose factor due to gamma emissions from noble gas radionuclide i, from Table 3-5 [(mrad/y)/(μCi/m^3)].	3.4.2

Term	Definition	Section of Initial Use
N =	the number of simultaneously active gaseous release pathways [unitless].	3.3.4
N_i =	the air dose factor due to beta emissions from noble gas radionuclide i, from Table 3-5 [(mrad/y)/(μCi/m^3)].	3.4.2
P_{io} =	the site-specific dose factor for radionuclide i (I–131, I–133, tritium, and radionuclides in particulate form with half-lives greater than 8 days) and organ o. The values of P_{io} are equal to the site-specific R_{aipj} values presented in Table 3-9 [(mrem/y)/(μCi/m^3)].	3.4.1.2
Q_{iv} =	the release rate of noble gas radionuclide i from release pathway v during the period of interest [μCi/s].	3.3.2.2
Q'_{iv}=	the release rate of radionuclide i (I–131, I–133, tritium, and radionuclides in particulate form with half-lives greater than 8 days) from gaseous release pathway v during the period of interest [μCi/s].	3.4.1.2
$\tilde{Q}_{iv}$ =	the cumulative release of noble gas radionuclide i from release pathway v during the period of interest [μCi].	3.4.2
$\tilde{Q}'_{iv}$=	the cumulative release of non-noble-gas radionuclide i from release pathway v, during the period of interest [μCi].	3.4.3
R_{aipj} =	the site-specific dose factor for age group a, radionuclide i, exposure pathway p, and organ j. Values and units of R_{aipj} for each exposure pathway, age group, and radionuclide that may arise in calculations for implementing Section 3.1.4 are listed in Table 3-8 through Table 3-9.	3.4.3
R_k =	the ratio of the skin dose rate limit for noble gases, to the skin dose rate due to noble gases in the release under consideration [unitless].	3.3.2.1
R_t =	the ratio of the total body dose rate limit for noble gases, to the total body dose rate due to noble gases in the release under consideration [unitless].	3.3.2.1
r_k =	the ratio of the skin dose rate limit for noble gases, to the skin dose rate due to noble gases in the source stream under consideration [unitless].	3.3.3.1
r_t =	the ratio of the total body dose rate limit for noble gases, to the total body dose rate due to noble gases in the source stream under consideration [unitless].	3.3.3.1

Term	Definition	Section of Initial Use
SF =	the safety factor used in gaseous setpoint calculations to compensate for statistical fluctuations and errors of measurement [unitless].	3.3.2.2
t =	the number of whole or partial days elapsed in the current quarter, including the period of the release under consideration.	3.5.1
W_{vip} =	the annual average relative dispersion [$\overline{(X/Q)}_{vp}$] or deposition [$\overline{(D/Q)}_{vp}$] at the location of the controlling receptor, for release pathway v, as appropriate to exposure pathway p and radionuclide i.	3.4.3
X =	the noble gas concentration for the release under consideration [µCi/mL].	3.3.2.1
X_{ir} =	the concentration of radionuclide i applicable to active gaseous release pathway r [µCi/mL].	3.3.4
X_{is} =	the measured concentration of radionuclide i in gaseous source stream s [µCi/mL].	3.3.3
X_{iv} =	the measured concentration of radionuclide i in gaseous stream v [µCi/mL].	3.3.2.2
(X/Q) =	the highest relative concentration at any point at or beyond the SITE BOUNDARY [s/m^3].	3.3.2.1
$\overline{(X/Q)}_{rb}$ =	the annual average SITE BOUNDARY relative concentration applicable to active gaseous release pathway r [s/m^3].	3.3.4
$\overline{(X/Q)}_{vb}$ =	the highest annual average relative concentration at the SITE BOUNDARY for the discharge point of release pathway v, from Table 3-4 [s/m^3].	3.3.2.2
$\overline{(X/Q)}_{vp}$ =	annual average relative dispersion factor for release pathway v, at the location of the controlling receptor, from Table 3-7 [s/m^3].	3.4.3

CHAPTER 4
RADIOLOGICAL ENVIRONMENTAL MONITORING PROGRAM

4.1 LIMITS OF OPERATION

The following limits are the same for both units at the site. Thus, a single program including monitoring, land use survey, and quality assurance serves both units.

4.1.1 Radiological Environmental Monitoring

The Radiological Environmental Monitoring Program (REMP) shall be conducted as specified in Table 4-1.

4.1.1.1 Applicability

This control applies at all times.

4.1.1.2 Actions

4.1.1.2.1 With the REMP not being conducted as specified in Table 4-1, submit to the Nuclear Regulatory Commission (NRC), in the Annual Radiological Environmental Operating Report, a description of the reasons for not conducting the program as required and the plans for preventing a recurrence. Deviations from the required sampling schedule are permitted if specimens are unobtainable due to hazardous conditions, unavailability, inclement weather, equipment malfunction, or other just reasons. If deviations are due to equipment malfunction, efforts shall be made to complete corrective action prior to the end of the next sampling period.

4.1.1.2.2 With the confirmed[1] measured level of radioactivity as a result of plant effluents in an environmental sampling medium specified in Table 4-1 exceeding the reporting levels of Table 4-2 when averaged over any calendar quarter, submit within 30 days a special report to the NRC. The special report shall identify the cause(s) for exceeding the limit(s) and define the corrective action(s) to be taken to reduce radioactive effluents so that the potential annual dose to a MEMBER OF THE PUBLIC is less than the calendar year limits of Sections 2.1.3, 3.1.3, and 3.1.4. The methodology and parameters used to estimate the potential annual dose to a MEMBER OF THE PUBLIC shall be indicated in the special report.

When more than one of the radionuclides in Table 4-2 are detected in the sampling medium, this report shall be submitted if:

$$\frac{concentration\ (1)}{reporting\ level\ (1)} + \frac{concentration\ (2)}{reporting\ level\ (2)} + \cdots \geq 1.0$$

[1] Defined as confirmed by reanalysis of the original sample, or analysis of a duplicate or new sample, as appropriate. The results of the confirmatory analysis shall be completed at the earliest time consistent with the analysis.

When radionuclides other than those in Table 4-2 are detected and are the result of plant effluents, this special report shall be submitted if the potential annual dose to a MEMBER OF THE PUBLIC is equal to or greater than the calendar year limits stated in Sections 2.1.3, 3.1.3, and 3.1.4. This special report is not required if the measured level of radioactivity was not the result of plant effluents; however, in such an event, the condition shall be described in the Annual Radiological Environmental Operating Report. The levels of naturally-occurring radionuclides which are not included in the plant's effluent releases need not be reported.

4.1.1.2.3 If adequate samples of milk, or during the growing season, grass or leafy vegetation, can no longer be obtained from one or more of the sample locations required by Table 4-1, or if the availability is frequently or persistently wanting, efforts shall be made: to identify specific locations for obtaining suitable replacement samples; and to add any replacement locations to the REMP given in the ODCM within 30 days. The specific locations from which samples became unavailable may be deleted from the REMP. Pursuant to Technical Specification 5.5.1, documentation shall be submitted in the next Radioactive Effluent Release Report for the change(s) in the ODCM, including revised figure(s) and table(s) reflecting the changes to the location(s), with supporting information identifying the cause of the unavailability of samples and justifying the selection of any new location(s).

4.1.1.2.4 This control does not affect shutdown requirements or MODE changes.

4.1.1.3 Surveillance Requirements

The REMP samples shall be collected pursuant to Table 4-1 from the locations described in Section 4.2, and shall be analyzed pursuant to the requirements of Table 4-1 and Table 4-3. Required detection capabilities for thermoluminescent dosimeters used for environmental measurements shall be in accordance with the recommendations of Regulatory Guide 4.13. Program changes may be initiated based on operational experience.

Analyses shall be performed in such a manner that the stated MINIMUM DETECTABLE CONCENTRATIONs (MDCs) will be achieved under routine conditions. Occasionally background fluctuations, unavoidable small sample sizes, the presence of interfering radionuclides, or other uncontrollable circumstances may render these MDCs unachievable. In such cases, the contributing factors will be identified and described in the Annual Radiological Environmental Operating Report.

4.1.1.4 Basis

The REMP required by this control provides representative measurements of radiation and of radioactive materials in those exposure pathways, and for those radionuclides, which lead to the highest potential radiation exposures of MEMBERS OF THE PUBLIC resulting from the plant operation. The REMP implements Section IV.B.2, Appendix I, 10 CFR 50, and thereby supplements the radiological effluent monitoring program by measuring concentrations of radioactive materials and levels of radiation, which may then be compared with those expected on the basis of the effluent measurements and modeling of the environmental exposure pathways.

The detection capabilities required by Table 4-3 are within state-of-the-art for routine environmental measurements in industrial laboratories.

Table 4-1. Radiological Environmental Monitoring Program

Exposure Pathway and/or Sample	Number of Representative Samples and Sample Locations(1)	Sampling and Collection Frequency	Type and Frequency of Analysis
	1. DIRECT RADIATION		
Direct Radiation(2)	Thirty-six or more routine monitoring stations, either with two or more dosimeters, or with one instrument for measuring and recording dose rate continuously, placed as follows: An inner ring of stations, one in each meteorological sector in the general area of the site boundary. An outer ring of stations, one in each meteorological sector at approximately 5 miles from the site. The balance of the stations to be placed in special interest areas such as population centers, nearby residences, schools, and in one or more areas to serve as control stations.	Quarterly.	Gamma dose quarterly.
	2. AIRBORNE		
Radioiodine and Particulates	Samples from 5 or more locations as follows: Three or more samples from close to the three site boundary locations, in different sectors. One sample from the vicinity of a community having the highest calculated annual average ground-level D/Q. One sample from a control location, as, for example, a population center 10 to 20 miles distant and in the least prevalent wind direction.	Continuous sampler operation with sample collection weekly, or more frequently if required by dust loading.	Radioiodine Canister: I-131 analysis weekly. Particulate Sampler: Gross beta radioactivity analysis following filter change, and gamma isotopic analysis of composite (by location) quarterly.(3)(4)

Table 4-1. Radiological Environmental Monitoring Program

Exposure Pathway and/or Sample	Number of Representative Samples and Sample Locations(1)	Sampling and Collection Frequency	Type and Frequency of Analysis
3. WATERBORNE			
Surface(5)	One sample upstream. One sample downstream.	Composite sample over 1-month period.(6)	Gamma isotopic analysis monthly; composite for tritium analysis quarterly.(4)
Drinking	Two samples at each of the one to three nearest water treatment plants that could be affected by discharges from the facility. Two samples at a control location.	Composite sample of river water near intake at each water treatment plant over 2-week period when I-131 analysis is performed, monthly composite otherwise; and grab sample of finished water at each water treatment plant every 2 weeks or monthly, as appropriate.(6)	I-131 analysis on each sample when the dose calculated for the consumption of the water is greater than 1 mrem per year. Composite for gross beta and gamma isotopic analyses monthly. Composite for tritium analysis quarterly.(4)(7)
Sediment from Shoreline	One sample from downstream area with existing or potential recreational value.	Semiannually.	Gamma isotopic analysis semi-annually.(4)
Groundwater	An adequate number of onsite wells to provide detection of radioactive liquid releases into the groundwater from tanks, underground piping, and other plant equipment. At least one well at a control location.	Quarterly	Tritium and gamma isotopic quarterly. Other analyses based on results of tritium and gamma.

Table 4-1. Radiological Environmental Monitoring Program

Exposure Pathway and/or Sample	Number of Representative Samples and Sample Locations(1)	Sampling and Collection Frequency	Type and Frequency of Analysis
	4. INGESTION		
Milk	Samples from milking animals in three locations within 3 miles distance having the highest dose potential; if there are none, then one sample from milking animals in each of three areas between 3 and 5 miles distance where doses are calculated to be greater than 1 mrem per year.(7) One sample from milking animals at a control location about 10 miles distant or beyond, and preferably in a wind direction of low prevalence.	Semimonthly.	Gamma isotopic analysis semi-monthly.(4)(8)
Fish	At least one sample of any commercially and recreationally important species in vicinity of plant discharge area. At least one sample of any species in areas not influenced by plant discharge.	Semiannually.	Gamma isotopic analyses on edible portions.(4)
	At least one sample of any anadromous species in vicinity of plant discharge.	During spring spawning season.	Gamma isotopic analyses on edible portion.(4)
Grass or Leafy Vegetation	One sample from two onsite locations near the site boundary in different sectors.	Monthly during growing season.	Gamma isotopic.(4)(8)
	One sample from a control location about 15 miles distant.	Monthly during growing season.	Gamma isotopic.(4)(8)

Table 4-1. Radiological Environmental Monitoring Program

TABLE NOTATIONS

(1) For each sample location in this table, specific parameters of distance and direction sector from a point midway
between the center of the two reactors, and additional description where pertinent, are provided in Table 4-4, and in Figure 4-1 through Figure 4-4 of this ODCM.

(2) One or more instruments, such as a pressurized ion chamber, for measuring and recording dose rate continuously, may be used in place of or in addition to integrating dosimeters. For the purpose of this table, a thermoluminescent dosimeter (TLD) is considered to be one phosphor; two or more phosphors in a packet are considered as two or more dosimeters. Film badges shall not be used as dosimeters for measuring direct radiation.

(3) Airborne particulate sample filters shall be analyzed for gross beta radioactivity 24 hours or more after sampling
to allow for radon and thoron daughter decay. If gross beta activity in air particulate samples is greater than 10 times
the yearly mean of control samples, gamma isotopic analysis shall be performed on the individual samples.

(4) Gamma isotopic analysis means the identification and quantification of gamma-emitting radionuclides that may be attributable to the effluents from the facility.

(5) The upstream sample shall be taken at a distance beyond significant influence of the discharge. The downstream
sample shall be taken in an area beyond but near the mixing zone.

(6) Composite sample aliquots shall be collected at time intervals that are very short (e.g., hourly) relative to the compositing period (e.g., monthly) in order to assure obtaining a representative sample.

(7) The dose shall be calculated for the maximum organ and age group, using the methodology and parameters in the ODCM.

(8) If gamma isotopic analysis is not sensitive enough to meet the required MDC for I-131, a separate analysis for I-131 will be performed.

Table 4-2. Reporting Levels for Radioactivity Concentrations in Environmental Samples

Analysis	Water (pCi/L)	Airborne Particulate or Gases (pCi/m^3)	Fish (pCi/kg, wet)	Milk (pCi/L)	Grass or Leafy Vegetation (pCi/kg, wet)
H-3	2 E+4[a]				
Mn-54	1 E+3		3 E+4		
Fe-59	4 E+2		1 E+4		
Co-58	1 E+3		3 E+4		
Co-60	3 E+2		1 E+4		
Zn-65	3 E+2		2 E+4		
Zr-95	4 E+2				
Nb-95	7 E+2				
I-131	2 E+0[b]	9 E-1		3 E+0	1 E+2
Cs-134	3 E+1	1 E+1	1 E+3	6 E+1	1 E+3
Cs-137	5 E+1	2 E+1	2 E+3	7 E+1	2 E+3
Ba-140	2 E+2			3 E+2	
La-140	1 E+2			4 E+2	

a. This is the 40 CFR 141 value for drinking water samples. If no drinking water pathway exists, a value of 3 E+04 pCi/L may be used.

b. If no drinking water pathway exists, a value of 20 pCi/L may be used.

Table 4-3. Values for the Minimum Detectable Concentration (MDC)

Analysis	Minimum Detectable Concentration (MDC)[a]					
	Water (pCi/L)	Airborne Particulate or Gases (pCi/m^3)	Fish (pCi/kg, wet)	Milk (pCi/L)	Grass or Leafy Vegetation (pCi/kg, wet)	Sediment (pCi/kg, dry)
Gross Beta	4 E+0	1 E-2				
H-3	2 E+3[b]					
Mn-54	1.5 E+1		1.3 E+2			
Fe-59	3 E+1		2.6 E+2			
Co-58, Co-60	1.5 E+1		1.3 E+2			
Zn-65	3 E+1		2.6 E+2			
Zr-95	3 E+1					
Nb-95	1.5 E+1					
I-131	1 E+0[c]	7 E-2		1 E+0	6 E+1	
Cs-134	1.5 E+1	5 E-2	1.3 E+2	1.5 E+1	6 E+1	1.5 E+2
Cs-137	1.8 E+1	6 E-2	1.5 E+2	1.8 E+1	8 E+1	1.8 E+2
Ba-140	6 E+1			6 E+1		
La-140	1.5 E+1			1.5 E+1		

a. See the definition of MINIMUM DETECTABLE CONCENTRATION in Section 10.1. Other peaks which are measurable and identifiable as plant effluents, together with the radionuclides in this table, shall be analyzed and reported in accordance with Section 7.1.

b. If no drinking water pathway exists, a value of 3 E+3 pCi/L may be used.

c. If no drinking water pathway exists, a value of 1.5 E+1 pCi/L may be used.

4.1.2 Land Use Census

A land use census shall be conducted and shall identify the following within a distance of 5 miles in each of the 16 meteorological sectors: the location of the nearest milk animal,[1] the nearest permanent residence, and the nearest garden of greater than 500 square feet producing broad leafy vegetation. Land within the Savannah River Site is excluded from this census.

4.1.2.1 Applicability

This control applies at all times.

4.1.2.2 Actions

4.1.2.2.1 With a land use census identifying a location(s) which yields a calculated dose or dose commitment greater than values currently being calculated in accordance with Section 3.4.3, identify the new location(s) in the next Radioactive Effluent Release Report.

4.1.2.2.2 With a land use census identifying a location(s) which yields a calculated dose or dose commitment (via the same exposure pathway) 20 percent greater than at a location from which samples are currently being obtained in accordance with Section 4.1.1, add the new location(s) to the REMP within 30 days if samples are available. The sampling location, excluding control station location(s), having the lowest calculated dose or dose commitment (via the same exposure pathway) may be deleted from the REMP if new sampling locations are added. Pursuant to Technical Specification 5.5.1 submit in the next Radioactive Effluent Release Report any change(s) in the ODCM, including the revised figure(s) and table(s) reflecting any new location(s) and information supporting the change(s).

4.1.2.2.3 This control does not affect shutdown requirements or MODE changes.

4.1.2.3 Surveillance Requirements

The land use census shall be conducted annually, using that information which will provide good results, such as a door-to-door census, a visual census from automobile or aircraft, consultation with local agriculture authorities, or some combination of these methods, as feasible. Results of the land use census shall be included in the Annual Radiological Environmental Operating Report.

4.1.2.4 Basis

This control is provided to ensure that changes in the use of UNRESTRICTED AREAS are identified and that modifications to the REMP are made if required by the results of this census. This census satisfies the requirements of Section IV.B.3 of Appendix I to 10 CFR Part 50. Restricting the census to gardens of greater than 500 ft^2 provides assurance that significant exposure pathways via leafy vegetables will be identified and monitored since a garden of this size is the minimum required to produce the quantity (26 kg/y) of leafy vegetables assumed in Regulatory Guide 1.109 for consumption by a child. To determine this minimum garden size, the following assumptions were made: (1) 20 percent of the garden was used for growing broad leaf vegetation (i.e., similar to lettuce and cabbage) and (2) a vegetation yield of 2 kg/m^2 was obtained.

---

[1] Defined as a cow or goat that is producing milk for human consumption.

4.1.3 Interlaboratory Comparison Program

Analyses shall be performed on radioactive materials supplied as part of an Interlaboratory Comparison Program which satisfies the requirements of Regulatory Guide 4.15, Revision 1, February, 1979.

4.1.3.1 Applicability

This control applies at all times.

4.1.3.2 Actions

With analyses not being performed as required by Section 4.1.3, report the corrective actions taken to prevent a recurrence in the Annual Radiological Environmental Operating Report.

This control does not affect shutdown requirements or MODE changes.

4.1.3.3 Surveillance Requirements

A summary of the results obtained as part of the required Interlaboratory Comparison Program shall be included in the Annual Radiological Environmental Operating Report.

4.1.3.4 Basis

The requirement for participation in an approved Interlaboratory Comparison Program is provided to ensure that independent checks on the precision and accuracy of the measurements of radioactive material in environmental sample matrices are performed as part of the quality assurance program for environmental monitoring, in order to demonstrate that the results are reasonably valid for the purposes of Section IV.B.2, Appendix I, 10 CFR 50.

4.2 RADIOLOGICAL ENVIRONMENTAL MONITORING LOCATIONS

Table 4-4 and Table 4-5 and Figure 4-1 through Figure 4-5 specify the locations at which the measurements and samples are taken for the REMP required by Section 4.1.1.

Table 4-4. Radiological Environmental Monitoring Locations

Location Number	Descriptive Location	Direction	Distance (miles)	Sample Type(1)
1	River Bank	N	1.1	D
2	River Bank	NNE	0.8	D
3*	Discharge Area	NE	0.6	A
3*	River Bank	NE	0.7	D
4	River Bank	ENE	0.8	D
5	River Bank	E	1.0	D
6	Plant Wilson	ESE	1.1	D
7	Simulator Building	SE	1.7	D,V,A
8	River Road	SSE	1.1	D
9	River Road	S	1.1	D
10*	Met Tower	SSW	0.9	A
10*	River Road	SSW	1.1	D
11	River Road	SW	1.2	D
12	River Road	WSW	1.2	D,A
13	River Road	W	1.3	D
14	River Road	WNW	1.8	D
15	Hancock Landing Road	NW	1.5	D,V
16	Hancock Landing Road	NNW	1.4	D,A
17	Savannah River Site, River Road	N	5.4	D
18	Savannah River Site, D Area	NNE	5.0	D
19	Savannah River Site, Road A.13	NE	4.6	D
20	Savannah River Site, Road A.13.1	ENE	4.8	D
21	Savannah River Site, Road A.17	E	5.3	D
22	River Bank Downstream of Buxton Landing	ESE	5.2	D
23	River Road	SE	4.6	D
24	Chance Road	SSE	4.9	D
25	Chance Road near Highway 23	S	5.2	D
26	Highway 23 and Ebenezer Church Rd.	SSW	4.6	D

*Two locations in the same sector and shown as a single sample station in Figure 4-1

Table 4-4 (contd). Radiological Environmental Monitoring Locations

Location Number	Descriptive Location	Direction	Distance (miles)	Sample Type(1)
27	Highway 23, opposite Boll Weevil Road	SW	4.7	D
28	Thomas Road	WSW	5.0	D
29	Claxton-Lively Road	W	5.1	D
30	Nathaniel Howard Road	WNW	5.0	D
31	River Road at Allen's Chapel Fork	NW	5.0	D
32	River Bank	NNW	4.7	D
35	Girard	SSE	6.6	D,A
36	GPC Waynesboro Operating Headquarters	WSW	13.9	D,A
37	Substation; Waynesboro, GA	WSW	16.7	D,V
43	Employees Recreation Area	SW	2.2	D
47	Oak Grove Church	SE	10.4	D
48	McBean Cemetery	NW	10.2	D
51	SGA School; Sardis, GA	S	11.0	D
52	Oglethorp Substation; Alexander, GA	SW	10.7	D
80	Augusta Water Treatment Plant	NNW	29.0	W(2)
81	Savannah River	N	2.5	F(3),S(4)
82	Savannah River (RM 151.2)	NNE	0.8	R
83	Savannah River (RM 150.4)	ENE	0.8	R,S(4)
84	Savannah River (RM 149.5)	ESE	1.6	R
85	Savannah River	ESE	4.3	F(3)
87	Beaufort - Jasper Water Treatment Plant; Beaufort, SC	SE	76.0	W(5) SEE NOTE 5
88	Cherokee Hill Water Treatment Plant; Port Wentworth, GA	SSE	72.0	W(6)
89	Purrysburg Water Treatment Plant; Purrysburg, SC	SSE	76.0	W(7)
101	Girard Dairy	S	5.5	M
102	Seven Oaks Dairy/Milky Way Dairy	w	7.5/16.0	M

Table 4-4 (cont.) Radiological Environmental Monitoring Locations

TABLE NOTATIONS

(1) Sample Types:

A - Airborne Radioactivity
D - Direct Radiation
F - Fish
M - Milk
R - River Water
S - River Shoreline Sediment
W - Drinking Water (at water treatment plant)
V - Vegetation

(2) The intake for the Augusta Water Treatment Plant is located on the Augusta Canal. The entrance to this canal is at river mile (RM) 207 on the Savannah River. The canal effectively parallels the river. The intake to the pumping station is about 4 miles down the canal and only 0.1 mile from the river (across land).

(3) About a 5-mile stretch of the river is generally needed to obtain adequate fish samples. Samples are normally gathered between RM 153 and 158 for upriver collections and between RMs 144 and 149.4 for downriver collections.

(4) Sediment is collected at locations with existing or potential recreational value. High water shifting of the river bottom or other reasons could cause a suitable location for sediment collection to become unavailable or unsuitable. Thus, a stretch of river between RM 148.5 and 150.5 is designated for downriver sediment collections, while a stretch between RM 153 and 154 is designated for upriver collections. In practice, collections are normally made at RM 150.2 for downriver collections and at RM 153.3 for upriver collections.

(5) DELETED THIS SAMPLE LOCATION IN 2014 (REF 34). Two additional indicator stations are available. Historical: The intake for the Beaufort-Jasper Water Treatment Plant is located at the end of a canal which begins at RM 39.3 on the Savannah River. This intake is about 16 miles by line of sight down the canal from its beginning on the Savannah River.

(6) The intake for the Cherokee Hill Water Treatment Plant is located on Abercorn Creek, which is about one and a quarter creek miles from its mouth on the Savannah River at RM 29.

(7) The intake for the Purrysburg Water Treatment Plant is located on the same canal as the Beaufort–Jasper Water Treatment Plant. The Purrysburg intake is nearer to the Savannah River at the beginning of the canal.

Table 4-5. Groundwater Monitoring Locations

WELL	AQUIFER	MONITORING PURPOSE
LT-1B	Water Table	NSCW related tank
LT-7A	Water Table	NSCW related tank
LT-12	Water Table	NSCW related tank
LT-13	Water Table	NSCW related tank
802A	Water Table	Southeastern potential leakage
803A*	Water Table	Up gradient to rad waste building
805A**	Water Table	Down gradient from rad waste bldg and NSCW related facilities
806B	Water Table	Dilution line
808	Water Table	Up gradient; along Pen Branch Fault
R1	Water Table	NSCW related tank; western potential leakage
R2	Water Table	Southern potential leakage
R3	Water Table	Eastern potential leakage
R4	Water Table	Dilution line
R5	Water Table	Dilution line
R6	Water Table	Dilution line
R7	Water Table	Dilution line
R8	Water Table	Dilution line
1014	Tertiary	Up gradient
1015	Water Table	Vertically up gradient
27**	Tertiary	Down gradient tertiary
29**	Tertiary	Down gradient tertiary
MU-1	Tertiary/Cretaceous	Facility water supply
River	N/A	Surface water

* Abandoned due to construction activities (REF 23).
** Removed from the tritium sampling program after collecting sufficient background data and due to structural and well construction issues (REF 25).

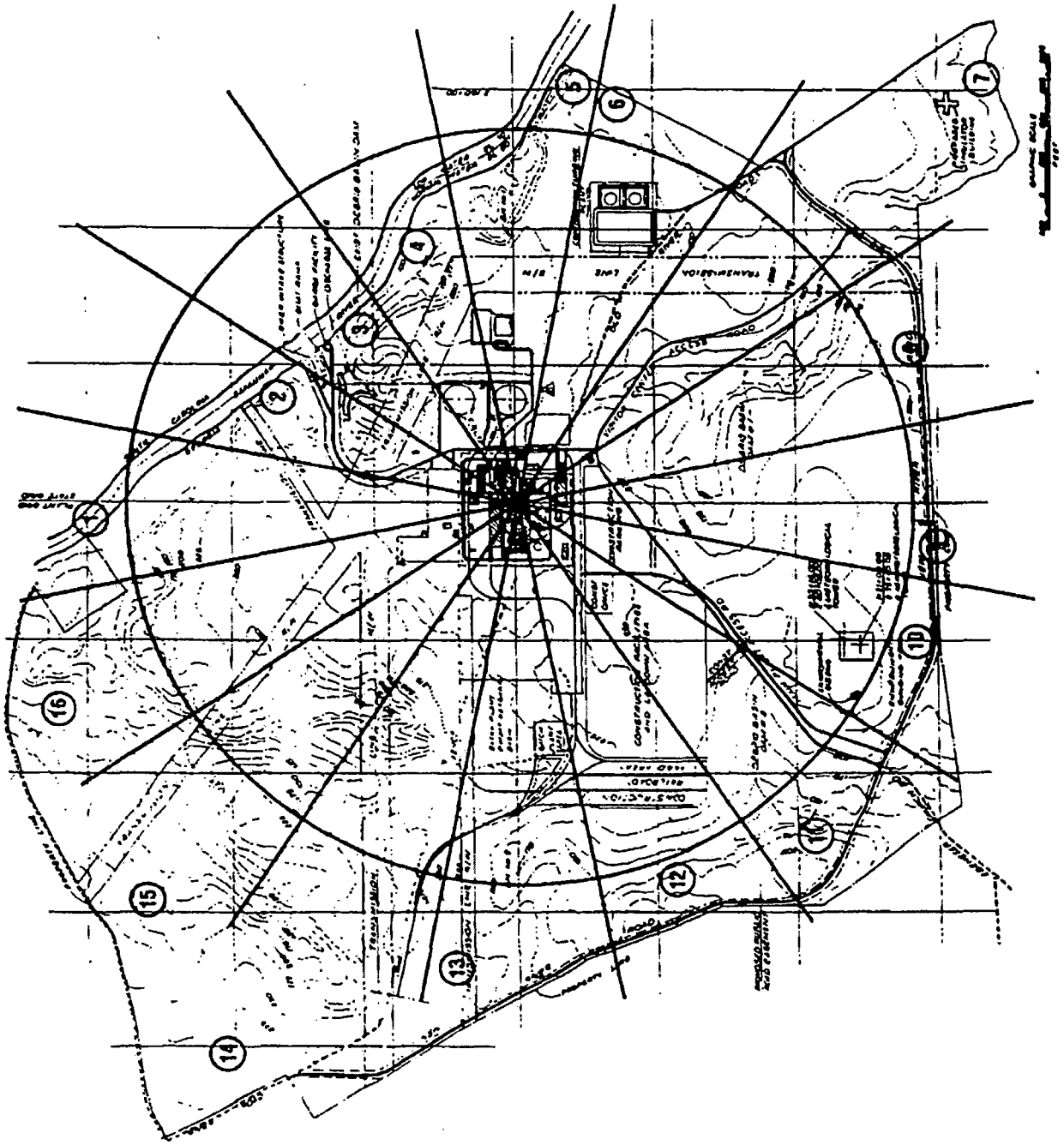

Figure 4-1. Terrestrial Stations Near Site Boundary

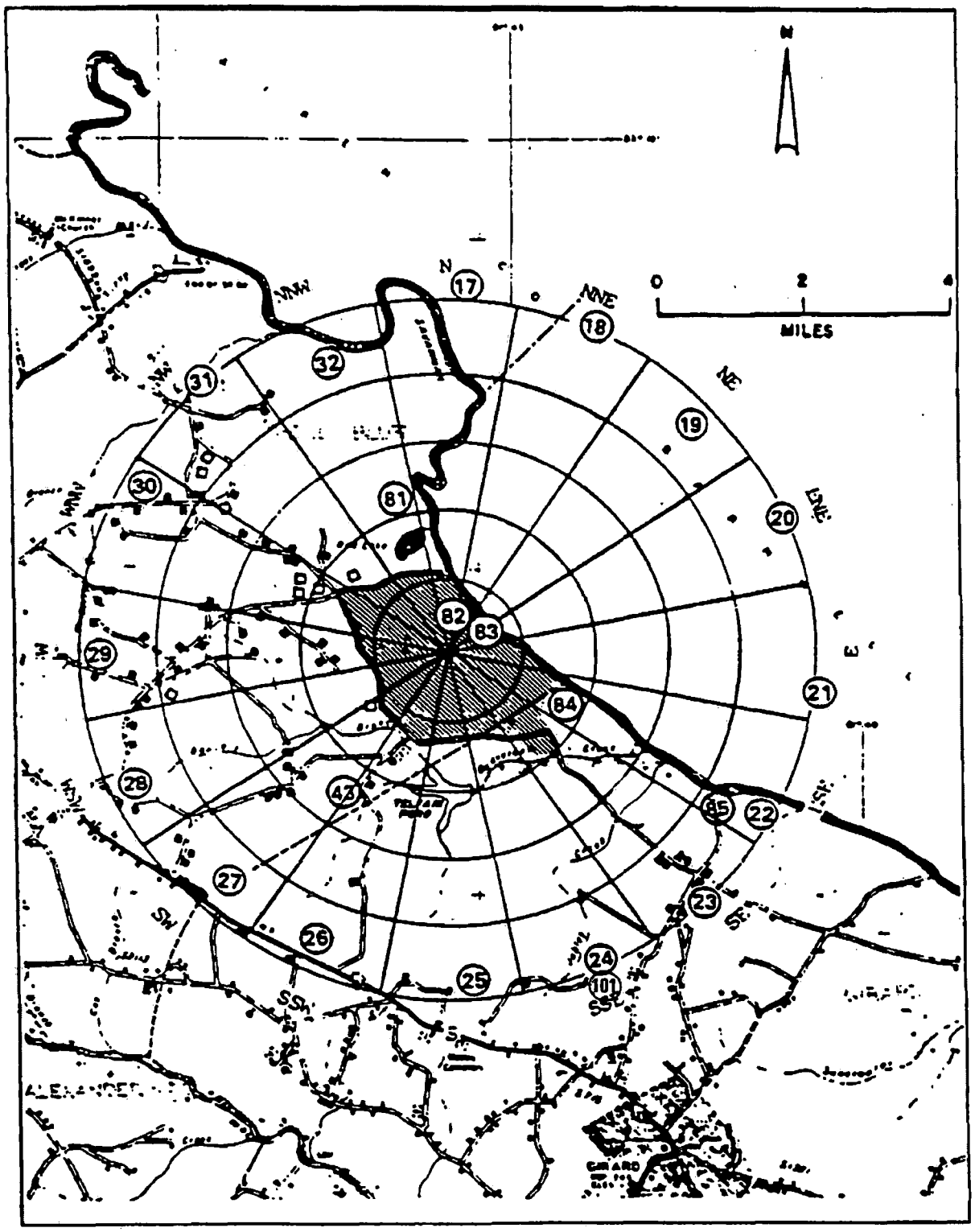

Figure 4-2. Terrestrial Stations and Aquatic Stations, 0-5 Miles

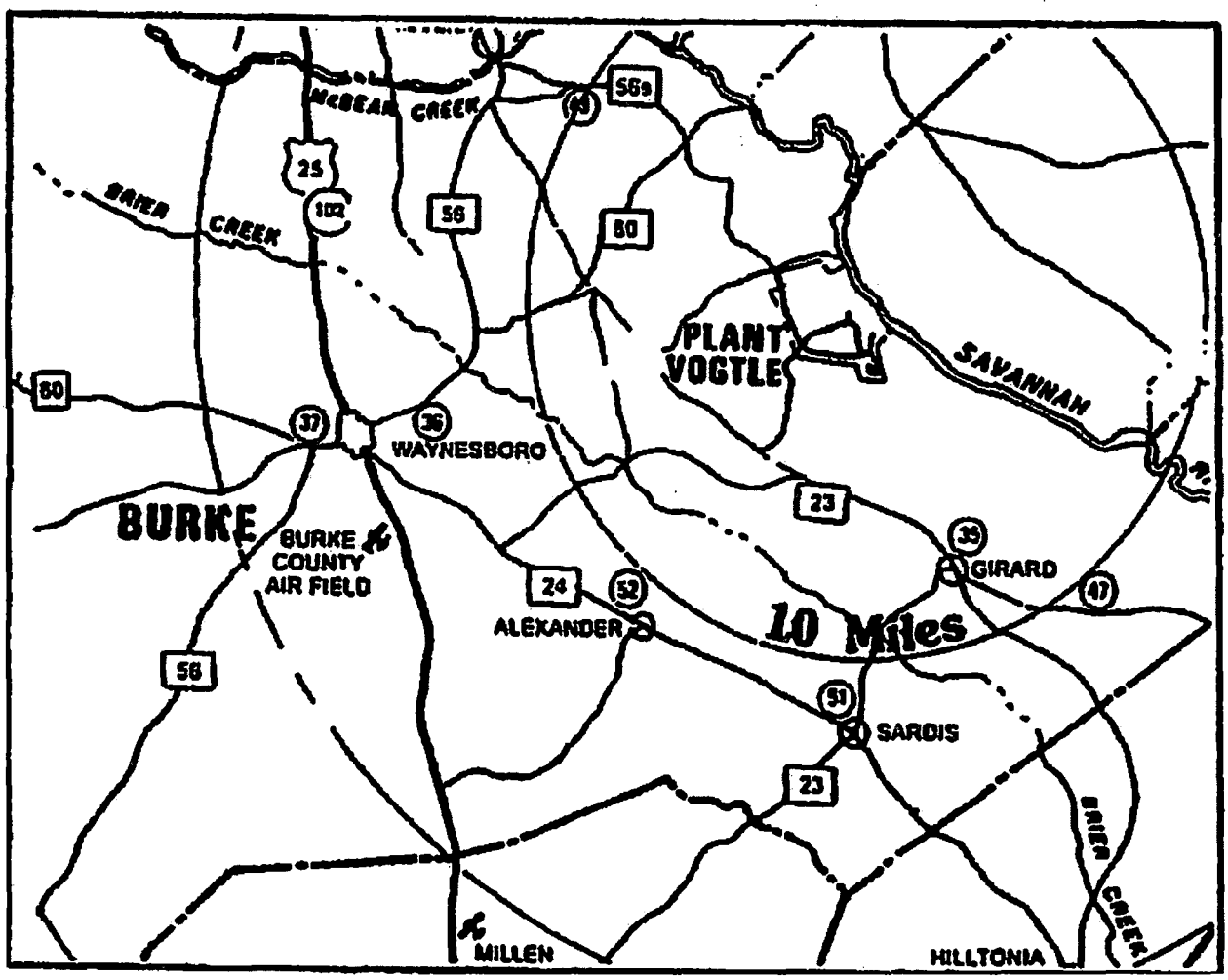

Figure 4-3. Terrestrial Stations Beyond 5 Miles

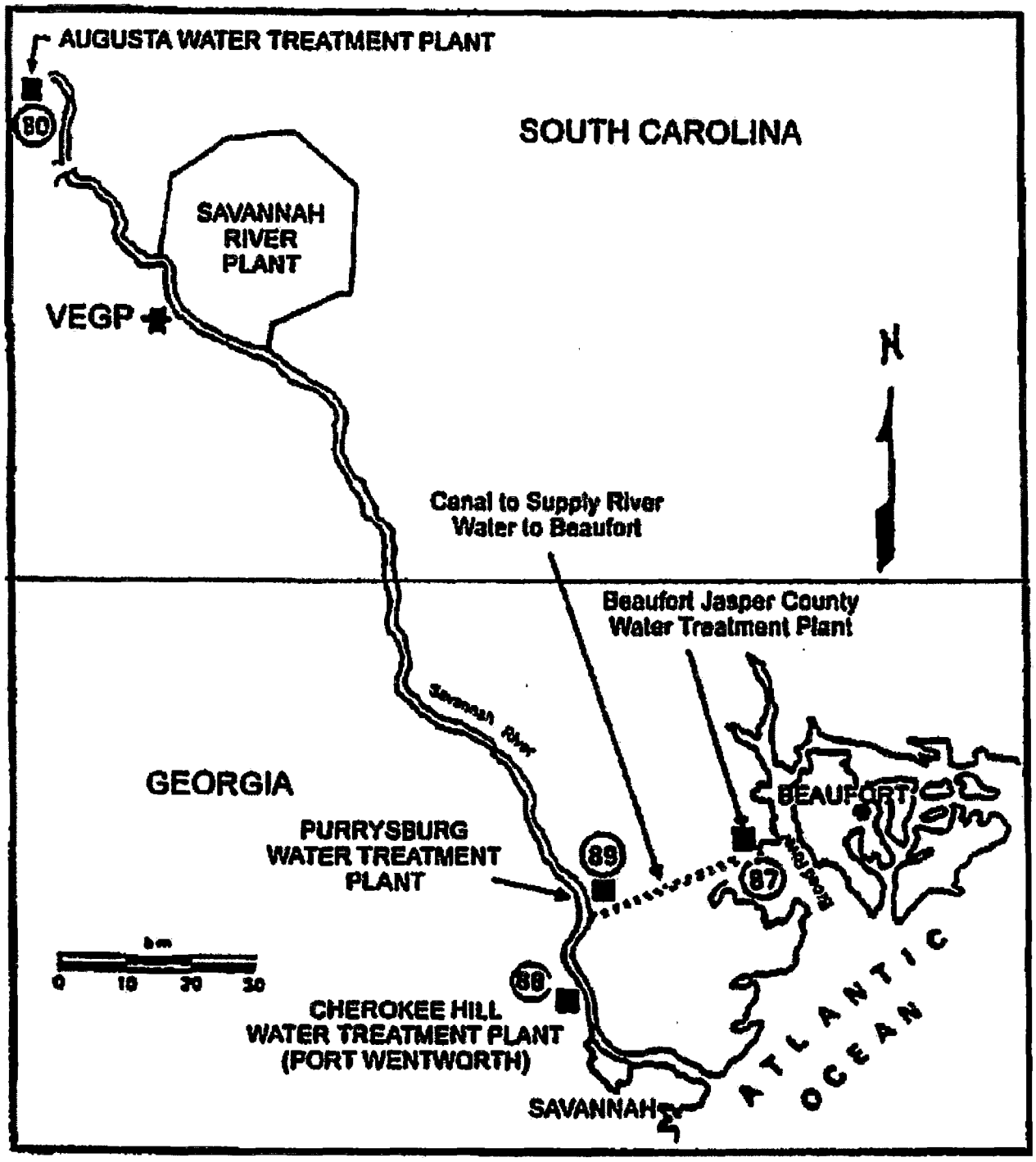

Figure 4-4. Drinking Water Stations

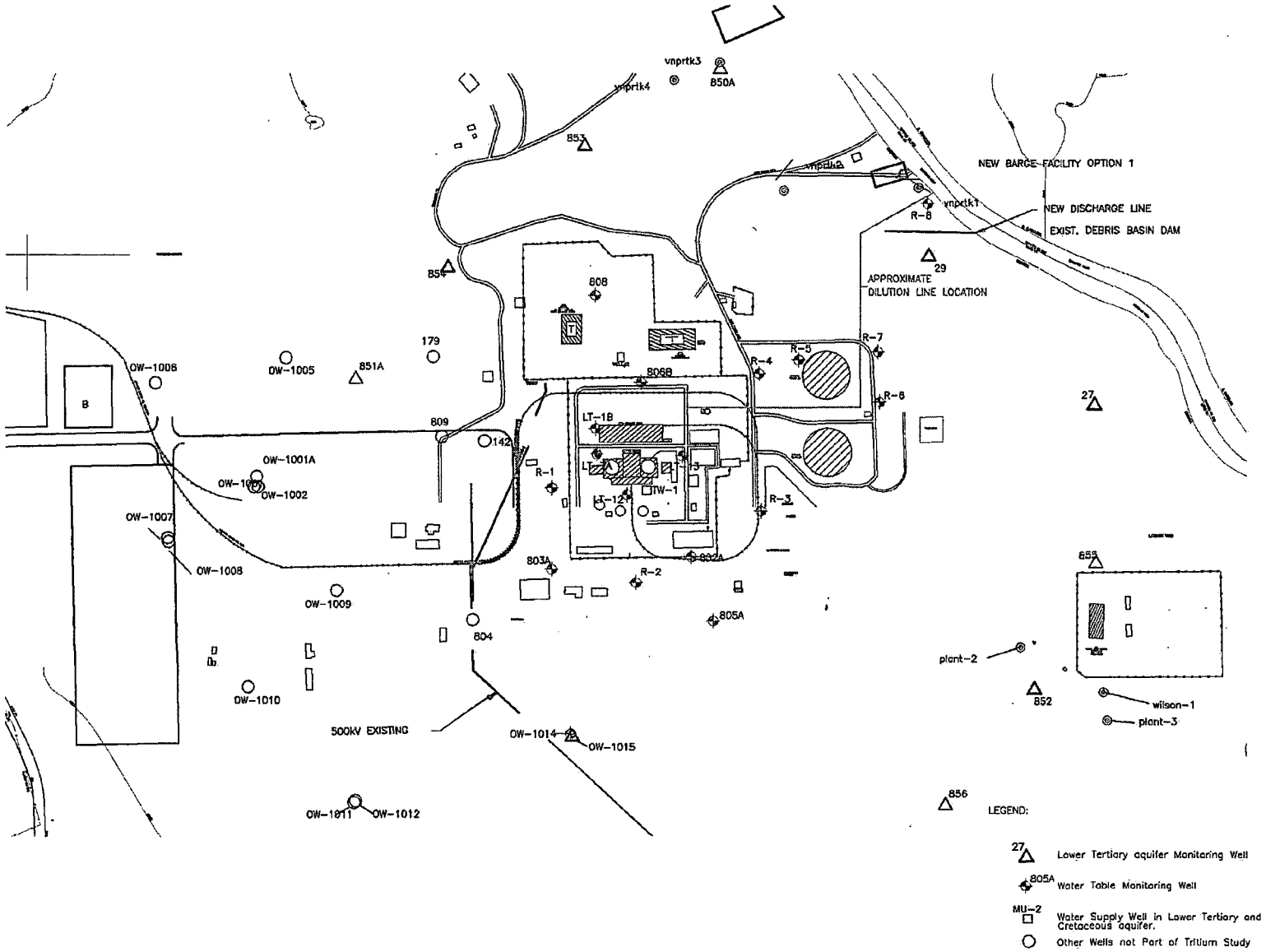

Figure 4-5 Groundwater Monitoring Wells

CHAPTER 5
TOTAL DOSE DETERMINATIONS

5.1 LIMIT OF OPERATION

In accordance with Technical Specification 5.5.4.j, the dose or dose commitment to any MEMBER OF THE PUBLIC over a calendar year, due to releases of radioactivity and to radiation from uranium fuel cycle sources, shall be limited to less than or equal to 25 mrem to the total body or any organ, except the thyroid, which shall be limited to less than or equal to 75 mrem.

5.1.1 Applicability

This limit applies at all times.

5.1.2 Actions

With the calculated doses from the release of radioactive materials in liquid or gaseous effluents exceeding twice the limits of Section 2.1.3, 3.1.3, or 3.1.4, calculations shall be made according to Section 5.2 methods to determine whether the limits of Section 5.1 have been exceeded. If these limits have been exceeded, prepare and submit a special report to the Nuclear Regulatory Commission within 30 days, which defines the corrective actions to be taken to reduce subsequent releases to prevent recurrence of exceeding the limits of Section 5.1 and includes the schedule for achieving conformance with the limits of Section 5.1. This special report, as defined in 10 CFR 20.2203, shall also include an analysis which estimates the radiation exposure (dose) to a MEMBER OF THE PUBLIC from uranium fuel cycle sources (including all effluent pathways and direct radiation) for the calendar year that includes the release(s) covered by this report. This special report shall also describe the levels of radiation and concentrations of radioactive material involved, and the cause of the exposure levels or concentrations. If the estimated dose(s) exceeds the limits of Section 5.1, and if the release condition resulting in violation of the provisions of 40 CFR 190 has not already been corrected, the special report shall include a request for variance in accordance with the provisions of 40 CFR 190 and including the specified information of 40 CFR 190.11(b). Submittal of the report is considered a timely request, and a variance is granted until staff action on the request is complete.

This control does not affect shutdown requirements or MODE changes.

5.1.3 Surveillance Requirements

Cumulative dose contributions from liquid and gaseous effluents and from direct radiation shall be determined in accordance with Section 5.2. This requirement is applicable only under the conditions set forth above in Section 5.1.2.

5.1.4 Basis

This control is provided to meet the dose limitations and reporting requirements of 40 CFR 190. The control requires the preparation and submittal of a special report whenever the calculated doses from plant radioactive effluents exceed the limits of Section 5.1. For sites containing up to 4 reactors, it is highly unlikely that the resultant dose to a MEMBER OF THE PUBLIC will exceed the dose limits of 40 CFR 190 if the individual reactors remain within twice the dose design objectives of Appendix I and if direct radiation doses from the units, such as direct exposure from

outside storage tanks, are kept small. The special report will describe a course of action which should result in the limitation of dose to a MEMBER OF THE PUBLIC for a calendar year to within the 40 CFR 190 limits. For the purposes of the special report, it may be assumed that the dose commitment to the MEMBER OF THE PUBLIC from other uranium fuel cycle sources is negligible with the exception that dose contributions from other uranium fuel cycle facilities at the same site or within a radius of 5 miles must be considered. If the dose to any MEMBER OF THE PUBLIC is estimated to exceed the requirements of 40 CFR 190, the special report with a request for variance (provided the release conditions resulting in violation of 40 CFR 190 have not already been corrected), in accordance with the provisions of 40 CFR 190.11 and 10 CFR 20.2203(a)(4), is considered to be a timely request and fulfills the requirements of 40 CFR 190 until NRC staff action is completed. The variance only relates to the limits of 40 CFR 190, and does not apply in any way to the requirements for dose limitation as addressed in other sections of this ODCM. An individual is not considered a MEMBER OF THE PUBLIC during any period in which he/she is engaged in carrying out any operation which is part of the nuclear fuel cycle.

5.2 DEMONSTRATION OF COMPLIANCE

There are no other uranium fuel cycle facilities within 5 miles of the plant site. Therefore, for the purpose of demonstrating compliance with the limits of Section 5.1, the total dose to a MEMBER OF THE PUBLIC in the vicinity of the plant site due to uranium fuel cycle sources shall be determined as follows:

$$D_{Tk} = D_L + D_G + D_D + D_N \qquad \textbf{(5.1)}$$

where:

D_{Tk} = the total dose or dose commitment to the total body or organ k, in mrem.

D_L = the dose to the same organ due to radioactivity discharged from the plant site in liquid effluents, calculated in accordance with Section 2.4.1, in mrem.

D_G = the dose to the same organ due to non-noble-gas radionuclides discharged from the plant site in gaseous effluents, calculated for the controlling receptor in accordance with Section 3.4.3, in mrem.

D_D = the direct radiation dose to the whole body of an individual at the controlling receptor location, due to radioactive materials retained within the plant site, in mrem. Values of direct radiation dose may be determined by measurement, calculation, or a combination of the two.

D_N = the external whole body dose to an individual at the controlling receptor location, due to gamma ray emissions from noble gas radionuclides discharged from the plant site in gaseous effluents, in mrem. D_N is calculated as follows (equation adapted from Reference 1, page 22, by recasting in cumulative dose form):

$$D_N = 3.17 \times 10^{-8} \sum_v \left\{ \left(\overline{X/Q} \right)_{vp} \sum_i \left[K_i \cdot \tilde{Q}_{iv} \right] \right\} \qquad \textbf{(5.2)}$$

where:

3.17×10^{-8} = a units conversion factor: 1 y/(3.15×10^7 s).

$\tilde{Q}_{iv}$ = the cumulative release of noble gas radionuclide i from release pathway v (μCi), during the period of interest.

K_i = the total-body dose factor due to gamma emissions from noble gas radionuclide i (mrem/y)/(μCi/m^3), from Table 3-5.

$\overline{(X/Q)}_{vp}$ = annual average relative dispersion factor for release pathway v, at the location of the controlling receptor, from Table 3-7 [s/m^3].

As defined above, D_L and D_G are for different age groups, while D_D and D_N are not age group specific. When a more precise determination of D_{Tk} is desired, values of D_L and D_G may be calculated for all four age groups, and those values used in equation (5.1) to determine age group specific values of D_{Tk}; the largest value of D_{Tk} for any age group may then be compared to the limits of Section 5.1.

CHAPTER 6
POTENTIAL DOSES TO MEMBERS OF THE PUBLIC DUE TO THEIR ACTIVITIES INSIDE THE SITE BOUNDARY

6.1 REQUIREMENT FOR CALCULATION

To support the reporting requirements of Section 7.2.2.3, an assessment of the radiation doses from radioactive liquid and gaseous effluents to MEMBERS OF THE PUBLIC due to their activities inside the SITE BOUNDARY shall be performed as specified in Section 6.2, at least once per calendar year.

6.2 CALCULATIONAL METHOD

For the purpose of performing the calculations required in Section 6.1, the dose to a member of the public inside the SITE BOUNDARY shall be determined at the locations, and for the receptor age groups, defined in Table 6-1. The dose to such a receptor at any one of the defined locations shall be determined as follows:

$$D_{Ik} = [D_A + D_S + D_P] \cdot F_o \qquad \textbf{(6.1)}$$

where:

D_{Ik} = the total dose to the total body or organ k, in mrem.

D_A = the dose to the same organ due to inhalation of non-noble-gas radionuclides discharged from the plant site in gaseous effluents, calculated in accordance with Section 3.4.3, in mrem. The $\overline{(X/Q)}$ value to be used is given for each receptor location in Table 6-1; depleted $\overline{(X/Q)}$ values may be used in calculations for non-noble-gas radionuclides.

D_S = the dose to the same organ due to ground plane deposition of non-noble-gas radionuclides discharged from the plant site in gaseous effluents, calculated in accordance with Section 3.4.3, in mrem. The $\overline{(D/Q)}$ value to be used is given for each receptor location in Table 6-1.

D_P = the external whole body dose due to gamma ray emissions from noble gas radionuclides discharged from the plant site in gaseous effluents, calculated using equation (5.2), in mrem. The $\overline{(X/Q)}$ values that are to be used are given for each receptor location in Table 6-1.

F_o = the occupancy factor for the given location, which is the fraction of the year that one individual MEMBER OF THE PUBLIC is assumed to be present at the receptor location [unitless]. Values of F_o for each receptor location are included in Table 6-1.

Table 6-1. Attributes of Member of the Public Receptor Locations Inside the Site Boundary

Location: Visitors Center, SE at 447 meters

Age Group: Child

Occupancy Factor: 4.57×10^{-4} (based on 4 hours per year)

Dispersion and Deposition Parameters:

Parameter	Ground-Level	Mixed-Mode
Undepleted $(\overline{X/Q})$, s/m^3	5.93 E-6	7.12 E-7
Depleted $(\overline{X/Q})$, s/m^3	5.58 E-6	6.74 E-7
$(\overline{D/Q})$, m^{-2}	2.28 E-8	5.77 E-9

CHAPTER 7
REPORTS

7.1 ANNUAL RADIOLOGICAL ENVIRONMENTAL OPERATING REPORT

7.1.1 Requirement for Report

In accordance with Technical Specification 5.6.2, the Annual Radiological Environmental Operating Report covering the REMP activities during the previous calendar year shall be submitted before May 15 of each year. (A single report fulfills the requirements for both units.) The material provided shall be consistent with the objectives outlined in section 4.1 and section 7.1.2 of the ODCM, and in Sections IV.B.2, IV.B.3, and IV.C of Appendix I to 10 CFR Part 50.

7.1.2 Report Contents

The materials specified in the following subsections shall be included in each Annual Radiological Environmental Operating Report:

7.1.2.1 Data

The report shall include summarized and tabulated results of all REMP samples required by Table 4-1 taken during the report period, in a format similar to that contained in Table 3 of the Radiological Assessment Branch Technical Position (Reference 19); the results for any additional samples shall also be reported. In the event that some results are not available for inclusion with the report, the report shall be submitted noting and explaining the reasons for the missing results; the missing data shall be submitted as soon as possible in a supplementary report. The results for naturally-occurring radionuclides not included in plant effluents need not be reported.

7.1.2.2 Evaluations

Interpretations and analyses of trends of the results shall be included in the report, including the following: (as appropriate) comparisons with preoperational studies, operational controls, and previous environmental reports; and an assessment of any observed impacts of the plant operation on the environment. If the measured level of radioactivity in an environmental sampling medium exceeding the reporting levels of Table 4-2 is not the result of plant effluents, the condition shall be described as required by Section 4.1.1.2.2.

7.1.2.3 Programmatic Information

Also to be included in each report are the following: a summary description of the REMP; a map(s) of all sampling locations keyed to a table giving distances and directions from a point midway between the centers of the two reactors; the results of land use censuses required by Section 4.1.2; and the results of licensee participation in the Interlaboratory Comparison Program required by Section 4.1.3.

7.1.2.4 Descriptions of Program Deviations

Discussions of deviations from the established program must be included in each report, as follows:

7.1.2.4.1 If the REMP is not conducted as required in Table 4-1, a description of the reasons for not conducting the program as required, and the plans for preventing a recurrence, must be included in the report.

7.1.2.4.2 If the MDCs required by Table 4-3 are not achieved, the contributing factors must be identified and described in the report.

7.1.2.4.3 If Interlaboratory Comparison Program analyses are not performed as required by Section 4.1.3, the corrective actions taken to prevent a recurrence must be included in the report.

7.2 RADIOACTIVE EFFLUENT RELEASE REPORT

7.2.1 Requirement for Report

In accordance with Technical Specification 5.6.3, the Radioactive Effluent Release Report covering the operation of the units during the previous calendar year of operation shall be submitted in accordance with 10 CFR Part 50.36a. (A single submittal may be made for Units 1 and 2. However, the submittal shall specify the releases of radioactive material in liquid and gaseous effluents from each unit and solid radioactive waste from the site.) The report shall include a summary of the quantities of radioactive liquid and gaseous effluents and solid waste released from the units. The material provided shall be consistent with the objectives outlined throughout this ODCM and the Process Control Program (PCP) and in conformance with 10 CFR Part 50.36a and Section IV.B.1 of Appendix I to 10 CFR Part 50.

7.2.2 Report Contents

The materials specified in the following subsections shall be included in each Radioactive Effluent Release Report:

7.2.2.1 Quantities of Radioactive Materials Released

The report shall include a summary of the quantities of radioactive liquid and gaseous effluents and solid waste released from the units as outlined in NRC Regulatory Guide 1.21, "Measuring, Evaluating, and Reporting Radioactivity in Solid Wastes and Releases of Radioactive Materials in Liquid and Gaseous Effluents from Light-Water-Cooled Nuclear Power Plants," Revision 1, June 1974, with liquid and gaseous effluent data summarized on a quarterly basis and solid radioactive waste data summarized on a semiannual basis following the format of Appendix B thereof. Unplanned releases of radioactive materials in gaseous and liquid effluents from the site to UNRESTRICTED AREAS shall be included in the report, tabulated either by quarter or by event. For gamma emitters released in liquid and gaseous effluents, in addition to the principal gamma emitters for which MDCs are specifically established in Table 2-3 and Table 3-3, other peaks which are measurable and identifiable also shall be identified and reported.

7.2.2.2 Meteorological Data

The report shall include an annual summary of hourly meteorological data collected over the previous year. This annual summary may be either in the form of an hour-by-hour listing of wind speed, wind direction, and atmospheric stability, and precipitation (if measured) on digital media; or in the form of joint frequency distributions of wind speed, wind direction, and atmospheric stability. In lieu of submission with the Radioactive Effluent Release Report, the licensee has the option of retaining this summary of required meteorological data on site in a file that shall be provided to the NRC upon request.

7.2.2.3 Dose Assessments

The report shall include an assessment of the radiation doses due to the radioactive liquid and gaseous effluents released from each unit during the previous calendar year. Historical annual average meteorology or the meteorological conditions concurrent with the time of release of radioactive materials in gaseous effluents (as determined by sampling frequency and measurement) shall be used for determining the gaseous pathway doses. This assessment of

radiation doses shall be performed in accordance with Sections 2.1.3, 2.4, 3.1.3, 3.1.4, 3.4.2, 3.4.3, 5.1, and 5.2.

If a determination is required by Section 5.1.2, the report shall also include an assessment of radiation doses to the likely most exposed MEMBER OF THE PUBLIC from reactor releases and other nearby uranium fuel cycle sources (including doses from primary effluent pathways and direct radiation) for the previous calendar year to show conformance with 40 CFR 190, Environmental Radiation Protection Standards for Nuclear Power Operation; this dose assessment must be performed in accordance with Chapter 5. The report shall also include an assessment of the radiation doses from radioactive liquid and gaseous effluents to MEMBERS OF THE PUBLIC due to their activities inside the SITE BOUNDARY during the report period; this assessment must be performed in accordance with Chapter 6. All assumptions used in making these assessments (i.e., specific activity, exposure time, and location) shall be included in the report.

7.2.2.4 Solid Radwaste Data

For each type of solid waste shipped offsite during the report period, the following information shall be included:

a. Waste volume,
b. Total curie quantity (specify whether determined by measurement of estimate),
c. Principal radionuclides (specify whether determined by measurement or estimate),
d. Type of waste (e.g., spent resin, compacted dry waste, evaporator bottoms),
e. Type of container (e.g., LSA, Type A, Type B, Large Quantity),
f. Solidification agent (e.g., cement, urea formaldehyde) and
g. Class of solid wastes (as defined by 10 CFR Part 61.)

7.2.2.5 Licensee Initiated Document Changes

Licensee initiated changes shall be submitted to the Nuclear Regulatory Commission as a part of or concurrent with the Radioactive Effluent Release Report for the period in which any changes were made. Such changes to the ODCM shall be submitted pursuant to Technical Specification 5.5.1. This requirement includes:

7.2.2.5.1 Any changes to the sampling locations in the radiological environmental monitoring program, including any changes made pursuant to Section 4.1.1.2.3. Documentation of changes made pursuant to Section 4.1.1.2.3 shall include supporting information identifying the cause of the unavailability of samples.

7.2.2.5.2 Any changes to dose calculation locations or pathways, including any changes made pursuant to Section 4.1.2.2.2.

7.2.2.6 Descriptions of Program Deviations

Discussions of deviations from the established program shall be included in each report, as follows:

7.2.2.6.1 The report shall include deviations from the liquid and gaseous effluent monitoring instrumentation FUNCTIONALITY requirements included in Sections 2.1.1 and 3.1.1, respectively. The report shall include an explanation as to why the NON-FUNCTIONALITY of the liquid or gaseous effluent monitoring instrumentation was not corrected within the specified time requirement.

7.2.2.6.2 The report shall include a description of the events leading to liquid holdup tanks or gas storage tanks exceeding the limits of Technical Specification 5.5.12.

7.2.2.7 Major Changes to Radioactive Waste Treatment Systems

As required by Sections 2.1.5 and 3.1.6, licensee initiated MAJOR CHANGES TO RADIOACTIVE WASTE TREATMENT SYSTEMS (liquid and gaseous) shall be reported to the Nuclear Regulatory Commission in the Radioactive Effluent Release Report covering the period in which the change was reviewed and accepted for implementation.[1] The discussion of each change shall contain:

a. A summary of the evaluation that led to the determination that the change could be made in accordance with 10 CFR 50.59;

b. Sufficient detailed information to totally support the reason for the change without benefit of additional supplemental information;

c. A detailed description of the equipment, components, and processes involved and the interfaces with other plant systems;

d. An evaluation of the change which shows the predicted releases of radioactive materials in liquid and gaseous effluents that differ from those previously predicted in the license applications and amendments thereto;

e. An evaluation of the change which shows the expected maximum exposures to individuals in the UNRESTRICTED AREA and to the general population that differ from those previously estimated in the license applications and amendments thereto;

f. A comparison of the predicted releases of radioactive materials, in liquid and gaseous effluents, to the actual releases for the period prior to when the changes are to be made;

g. An estimate of the exposure to plant operating personnel as a result of the change; and

h. Documentation of the fact that the change was reviewed and found acceptable by the PRB.

[1] In lieu of inclusion in the Radioactive Effluents Release Report, this same information may be submitted as part of the annual FSAR update.

7.3 MONTHLY OPERATING REPORT

This ODCM establishes no requirements pertaining to the Monthly Operating Report.

7.4 SPECIAL REPORTS

Special reports shall be submitted to the Nuclear Regulatory Commission as required by Sections 2.1.3.2, 2.1.4.2, 3.1.3.2, 3.1.4.2, 3.1.5.2, 4.1.1.2.2, and 5.1.2.

CHAPTER 8
METEOROLOGICAL MODELS

The models presented in this chapter are those which were used to compute the specific values of meteorology-related parameters that are referenced throughout this ODCM. These models should also be used whenever it is necessary to calculate values of these parameters for new locations of interest.

Note: Although Plant Vogtle has no pure elevated releases, the sections on elevated-mode calculations (8.1.2 and 8.2.2) are included for convenience in calculating mixed-mode values, and to preserve section number compatibility with the ODCMs of the other Southern Company nuclear power plants.

8.1 ATMOSPHERIC DISPERSION

Atmospheric dispersion may be calculated using the appropriate form of the sector-averaged Gaussian model. Gaseous release elevations may be considered to be either at ground-level, elevated, or mixed-mode. Facility release elevations for each gaseous release point are as indicated in Table 3-4.

8.1.1 Ground-Level Releases

Relative concentration calculations for ground-level releases, or for the ground-level portion of mixed-mode releases, shall be made as follows:

$$(X/Q)_G = \frac{2.032\,\delta\,K_r}{N\,r}\sum_{jk}\left[\frac{n_{jk}}{u_j\,\Sigma_{zk}}\right] \qquad \textbf{(8.1)}$$

where:

$(X/Q)_G$ = the ground-level sector-averaged relative concentration for a given wind direction (sector) and distance (s/m^3).

2.032 = $(2/\pi)^{1/2}$ divided by the width in radians of a 22.5° sector, which is 0.3927 radians.

δ = the plume depletion factor for all radionuclides other than noble gases at a distance r shown in Figure 8-3. For noble gases, the depletion factor is unity. If an undepleted relative concentration is desired, the depletion factor is unity. Only depletion by deposition is considered since depletion by radioactive decay would be of little significance at the distances considered.

K_r = the terrain recirculation factor corresponding to a distance r, taken from Appendix A of Reference 15.

n_{jk} = the number of hours that wind of wind speed class j is directed into the given sector during the time atmospheric stability category k existed.

N = the total hours of valid meteorological data recorded throughout the period of interest for all sectors, wind speed classes, and stability categories.

u_j = the wind speed (mid-point of wind speed class j) at ground level (m/s).

r = the distance from release point to location of interest (m).

Σ_{zk} = the vertical standard deviation of the plume concentration distribution considering the initial dispersion within the building wake, calculated as follows:

$$\Sigma_{zk} = the\ \ lesser\ \ of \begin{cases} \left(\sigma_{zk}^2 + \dfrac{b^2}{2\pi}\right)^{1/2} \\ OR \\ \sqrt{3}(\sigma_{zk}) \end{cases} \qquad \textbf{(8.2)}$$

σ_{zk} = the vertical standard deviation of the plume concentration distribution (m) for a given distance and stability category k as shown in Figure 8-1. The stability category is determined by the vertical temperature gradient $\Delta T/\Delta z$ (°C/100 m).

π = 3.1416

b = the maximum height of adjacent plant structure (55 m).

8.1.2 Elevated Releases

Relative dispersion calculations for elevated releases, or for the elevated portion of mixed-mode releases, shall be made as follows:

$$(X/Q)_E = \frac{2.032K_r}{N\,r}\sum_{jk}\left[\frac{\delta_k n_{jk} exp\left(\dfrac{-h^2}{2\sigma_{zk}^2}\right)}{u_j\sigma_{zk}}\right] \qquad \textbf{(8.3)}$$

where:

$(X/Q)_E$ = the elevated release sector-averaged relative concentration for a given wind direction (sector) and distance (s/m^3).

δ_k = the plume depletion factor for all radionuclides other than noble gases at a distance r for elevated releases, as shown in Figure 8-4, Figure 8-5, and Figure 8-6. For an elevated release, this factor is stability dependent. For noble gases, the depletion factor is unity. If an undepleted relative concentration is desired, the depletion factor is unity. Only depletion by deposition is considered since depletion by radioactive decay would be of little significance at the distances considered.

n_{jk} = the number of hours that wind of wind speed class j is directed into the given sector during the time atmospheric stability category k existed.

u_j = the wind speed (mid-point of wind speed class j) at the effective release height h (m/s).

h = the effective height of the release (m), which is calculated as follows:

$$h = h_v + h_{pr} - h_t - c_v \qquad \textbf{(8.4)}$$

h_v = the height of the release point (m).

h_t = the maximum terrain height between the release point and the point of interest (m), from Table 8-1.

h_{pr} = the additional height due to plume rise (m) which is calculated as follows and limited by $h_{pr(max)}$:

$$h_{pr} = 1.44\, d \left(\frac{W_o}{u}\right)^{2/3} \cdot \left(\frac{x}{d}\right)^{1/3} \qquad \textbf{(8.5)}$$

$$h_{pr}(max) = the \quad lesser \quad of: \begin{cases} 3\left(\frac{W_o}{u}\right) \cdot d \\ OR \\ 1.5\left(\frac{F_m}{u}\right)^{1/3} \cdot s^{-1/6} \end{cases} \qquad \textbf{(8.6)}$$

d = the inside diameter of the vent (m).

c_v = the correction for low vent exit velocity (m), which is calculated as follows:

$$c_v = \begin{cases} 3\left(1.5 - \frac{W_o}{u}\right) \cdot d & for \frac{W_o}{u} < 1.5 \\ OR & \\ 0 & for \frac{W_o}{u} \geq 1.5 \end{cases} \qquad \textbf{(8.7)}$$

F_m = the momentum flux parameter (m^4/s^2), which is calculated as follows:

$$F_m = \left(W_o \cdot \frac{d}{2}\right)^2 \qquad \textbf{(8.8)}$$

S = the stability parameter:

= $8.75 \times 10^{-4}\ s^{-2}$ for $-0.5 < \Delta T \leq 1.5$
= $1.75 \times 10^{-3}\ s^{-2}$ for $1.5 < \Delta T \leq 4.0$

$= \quad 2.45 \times 10^{-3}\ s^{-2}$ for $\Delta T > 4.0$

All other symbols are as previously defined in Section 8.1.1.

8.1.3 Mixed-Mode Releases

Relative dispersion calculations for mixed-mode releases shall be made as follows:

$$(X/Q)_M = (1-E)\cdot(X/Q)_E + E\cdot(X/Q)_G \qquad \textbf{(8.9)}$$

where:

$(X/Q)_M$ = the mixed-mode release sector-averaged relative concentration for a given wind direction (sector) and distance (s/m^3).

E = the fraction of hours during which releases are considered as ground-level releases, calculated as follows:

$$E = \begin{cases} 1.0 & \text{for } \dfrac{W_o}{u_j} \le 1.0 \\ 2.58 - 1.58\cdot\left(\dfrac{W_o}{u_j}\right) & \text{for } 1.0 < \dfrac{W_o}{u_j} \le 1.5 \\ 0.3 - 0.06\cdot\left(\dfrac{W_o}{u_j}\right) & \text{for } 1.5 < \dfrac{W_o}{u_j} \le 5.0 \\ 0 & \text{for } \dfrac{W_o}{u_j} > 5.0 \end{cases} \qquad \textbf{(8.10)}$$

All other symbols are as previously defined.

8.2 RELATIVE DEPOSITION

Plume depletion may be calculated using the appropriate form of the sector-averaged Gaussian model. Gaseous release elevations may be considered to be either at ground-level, elevated, or mixed-mode. Facility release elevations for each gaseous release points are as indicated in Table 3-4.

8.2.1 Ground-Level Releases

Relative deposition calculations for ground-level releases, or for the ground-level portion of mixed-mode releases, shall be made as follows:

$$(D/Q)_G = \frac{2.55 D_g \; K_r}{N \; r} \sum_k n_k \qquad \textbf{(8.11)}$$

where:

$(D/Q)_G$ = the ground-level sector-averaged relative deposition for a given wind direction (sector) and distance (m^{-2}).

2.55 = the inverse of the number of radians in a 22.5° sector [= $(2\pi/16)^{-1}$].

D_g = the deposition rate at distance r, taken from Figure 8-7 for ground-level releases (m^{-1}).

n_k = the number of hours in which the wind is directed into the sector of interest, and during which stability category k exists.

All other symbols are as defined previously in Section 8.1.

8.2.2 Elevated Releases

Relative deposition calculations for elevated releases, or for the elevated portion of mixed-mode releases, shall be made as follows:

$$(D/Q)_E = \frac{2.55 K_r}{N \; r} \sum_k (n_k \; D_{ek}) \qquad \textbf{(8.12)}$$

where:

$(D/Q)_E$ = the elevated-plume sector-averaged relative deposition for a given wind direction (sector) and distance (m^{-2}).

D_{ek} = the elevated plume deposition rate at distance r, taken from Figure 8-8, Figure 8-9, or Figure 8-10, as appropriate to the plume effective release height h defined in Section 8.1.2, for stability class k (m^{-1}).

All other symbols are as defined previously.

8.2.3 Mixed-Mode Releases

Relative deposition calculations for mixed-mode releases shall be made as follows:

$$(D/Q)_M = (1-E)\cdot(D/Q)_E + E\cdot(D/Q)_G \quad \textbf{(8.13)}$$

where:

$(D/Q)_M$ = the mixed-mode release sector-averaged relative deposition for a given wind direction (sector) and distance (m^{-2}).

E = the fraction of hours during which releases are considered as ground-level releases, defined in Section 8.1.3.

All other symbols are as previously defined.

8.3 ELEVATED PLUME DOSE FACTORS

These factors are not required in effluent dose calculations for VEGP.

Table 8-1. Terrain Elevation Above Plant Site Grade

Dist. (m)	N	NNE	NE	ENE	E	ESE	SE	SSE	S	SSW	SW	WSW	W	WNW	NW	NNW
500	0.0	0.0	0.0	0.0	0.0	0.0	0.0	0.0	0.0	4.7	8.7	5.7	1.4	5.8	5.7	3.5
1,000	0.0	0.0	0.0	0.0	0.0	0.0	0.0	0.0	0.0	4.7	16.7	13.4	3.3	10.4	11.8	6.8
1,500	0.0	0.0	0.0	0.0	0.0	0.0	0.0	0.0	0.0	4.7	21.7	18.6	7.3	12.2	14.3	7.3
2,000	0.0	0.0	0.0	0.0	0.0	0.0	0.0	0.0	0.0	4.7	21.7	18.6	7.3	12.2	14.3	7.3
2,500	0.0	0.0	0.0	0.0	0.0	0.0	0.0	0.0	0.0	4.7	21.7	18.6	7.3	12.2	14.3	7.3
3,000	0.0	0.0	0.0	0.0	0.0	0.0	0.0	0.0	0.0	4.7	23.7	18.6	7.3	12.2	14.3	7.3
3,500	0.0	0.0	0.0	0.0	0.0	0.0	0.0	0.0	0.0	4.7	24.4	18.6	7.3	12.2	16.9	7.3
4,000	0.0	0.0	0.0	0.0	0.0	0.0	4.5	0.0	0.0	4.7	24.4	18.6	7.3	12.2	16.9	7.3
5,000	0.0	0.0	0.0	0.0	0.0	0.0	11.1	0.0	0.0	4.7	24.7	18.6	7.3	12.2	16.9	7.3
6,000	0.0	0.0	0.0	0.0	0.0	0.0	11.1	0.0	0.0	4.7	26.8	18.6	7.3	12.2	16.9	7.3
7,000	0.0	0.0	0.0	7.8	0.0	0.0	11.1	0.0	3.6	4.7	26.8	18.6	7.3	12.2	16.9	7.3
8,000	0.0	0.0	21.1	13.9	0.0	0.0	11.8	0.0	14.6	4.7	26.8	18.6	7.3	12.2	16.9	7.3
9,000	0.0	0.0	24.4	14.6	0.0	0.0	12.7	7.1	14.6	5.1	26.8	18.6	7.3	12.2	16.9	7.3
10,000	0.0	10.2	24.4	20.2	0.0	0.0	17.1	17.0	14.6	6.8	26.8	18.6	7.3	12.2	16.9	7.3
12,000	0.0	15.9	26.8	20.2	0.0	0.0	17.1	19.5	14.6	6.8	34.1	28.9	13.4	12.2	16.9	7.3
14,000	0.0	15.9	26.8	20.2	0.0	0.0	17.1	19.5	14.6	6.8	34.1	28.9	13.4	16.5	19.7	7.3
16,000	0.0	15.9	26.8	21.7	13.2	0.0	17.1	19.5	14.6	6.8	34.1	28.9	13.4	16.5	25.7	7.3

Data in this table are obtained from Reference 11.

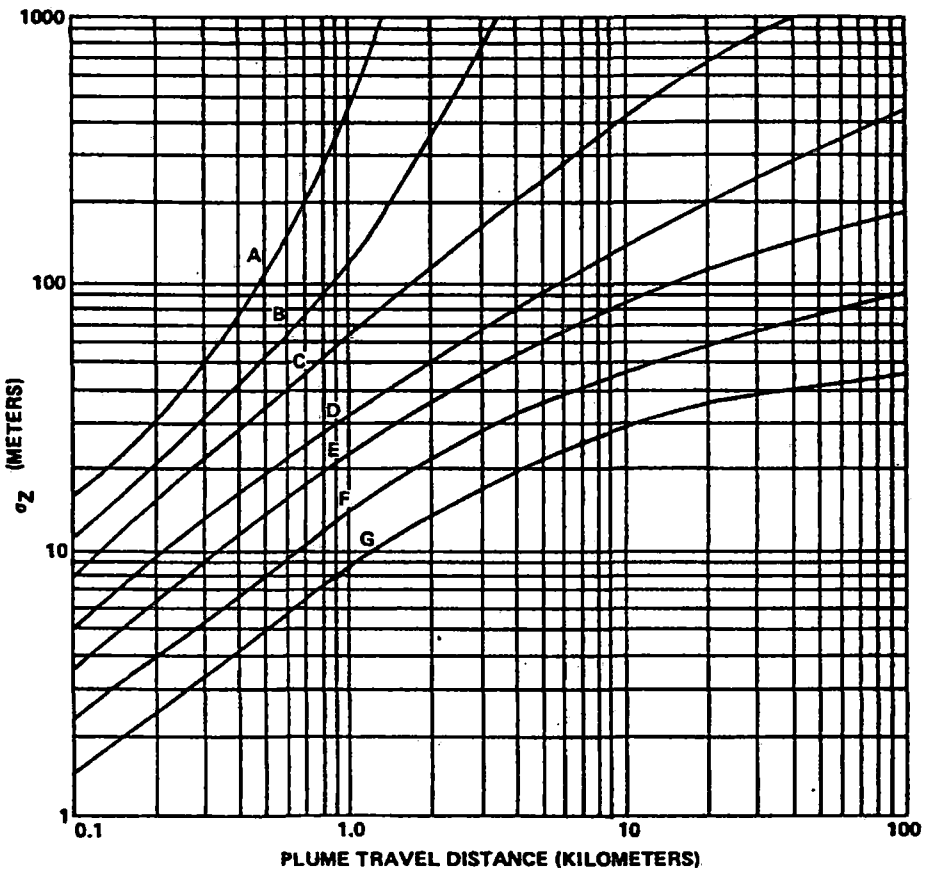

Category	Range of Vertical Temperature Gradient (°C/100 m)	Range of Vertical Temperature Gradient (°F/100 ft)
A	$\Delta T/\Delta Z < -1.9$	$\Delta T/\Delta Z < -1.0$
B	$-1.9 \leq \Delta T/\Delta Z < -1.7$	$-1.0 \leq \Delta T/\Delta Z < -0.9$
C	$-1.7 \leq \Delta T/\Delta Z < -1.5$	$-0.9 \leq \Delta T/\Delta Z < -0.8$
D	$-1.5 \leq \Delta T/\Delta Z < -0.5$	$-0.8 \leq \Delta T/\Delta Z < -0.3$
E	$-0.5 \leq \Delta T/\Delta Z < 1.5$	$-0.3 \leq \Delta T/\Delta Z < 0.8$
F	$1.5 \leq \Delta T/\Delta Z < 4.0$	$0.8 \leq \Delta T/\Delta Z < 2.2$
G	$4.0 \leq \Delta T/\Delta Z$	$2.2 \leq \Delta T/\Delta Z$

This graph is reproduced from Reference 5 (Figure 1).

Figure 8-1. Vertical Standard Deviation of Material in a Plume (σ_z)

This figure intentionally left blank.
Refer to the definition for K_r (terrain recirculation factor) in section 8.1.1 for applicable plant data.

Figure 8-2. Terrain Recirculation Factor (K_r)

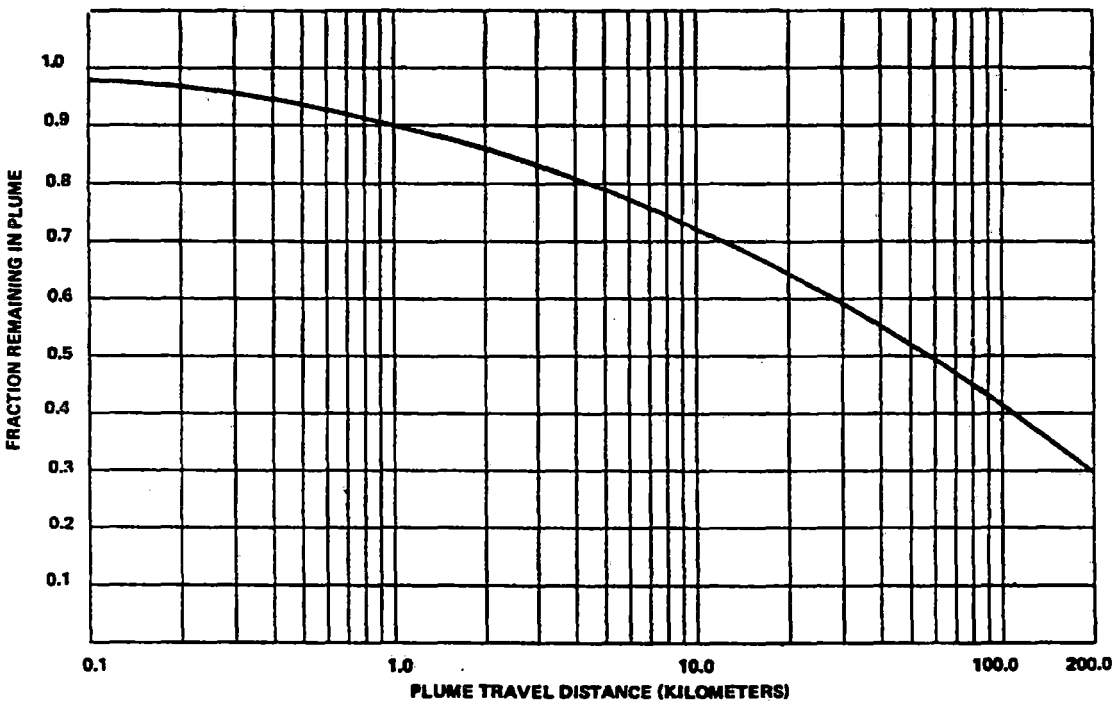

This graph is reproduced from Reference 5 (Figure 2).

Figure 8-3. Plume Depletion Effect for Ground Level Releases

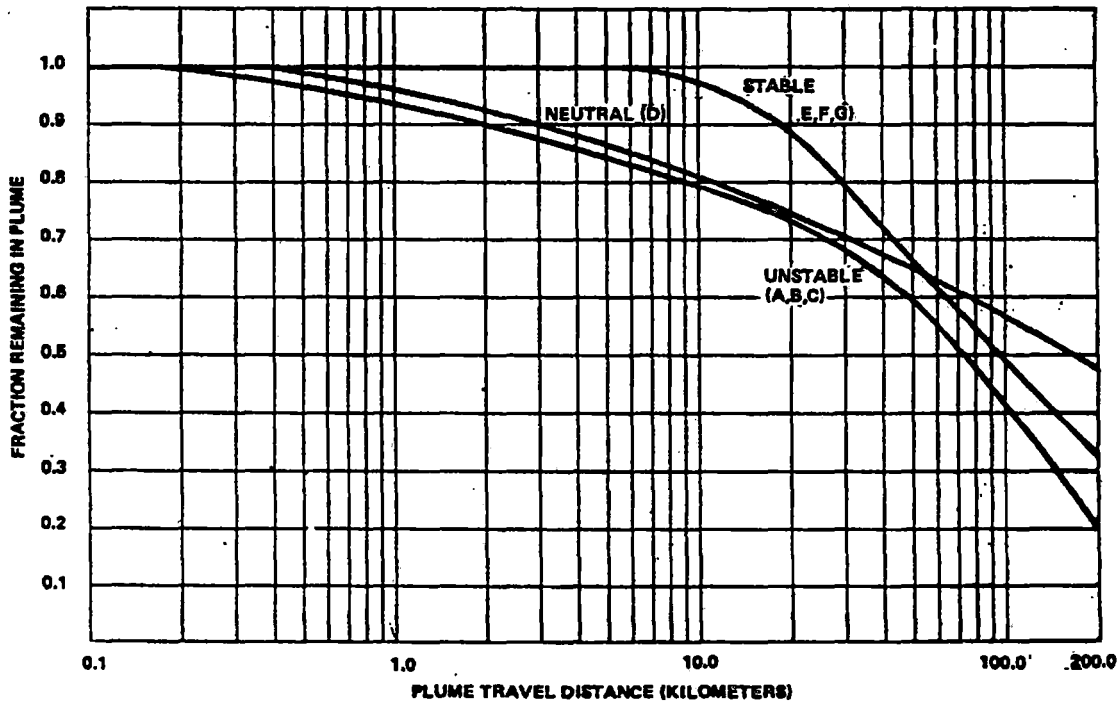

This graph is reproduced from Reference 5 (Figure 3).

Figure 8-4. Plume Depletion Effect for 30-Meter Releases

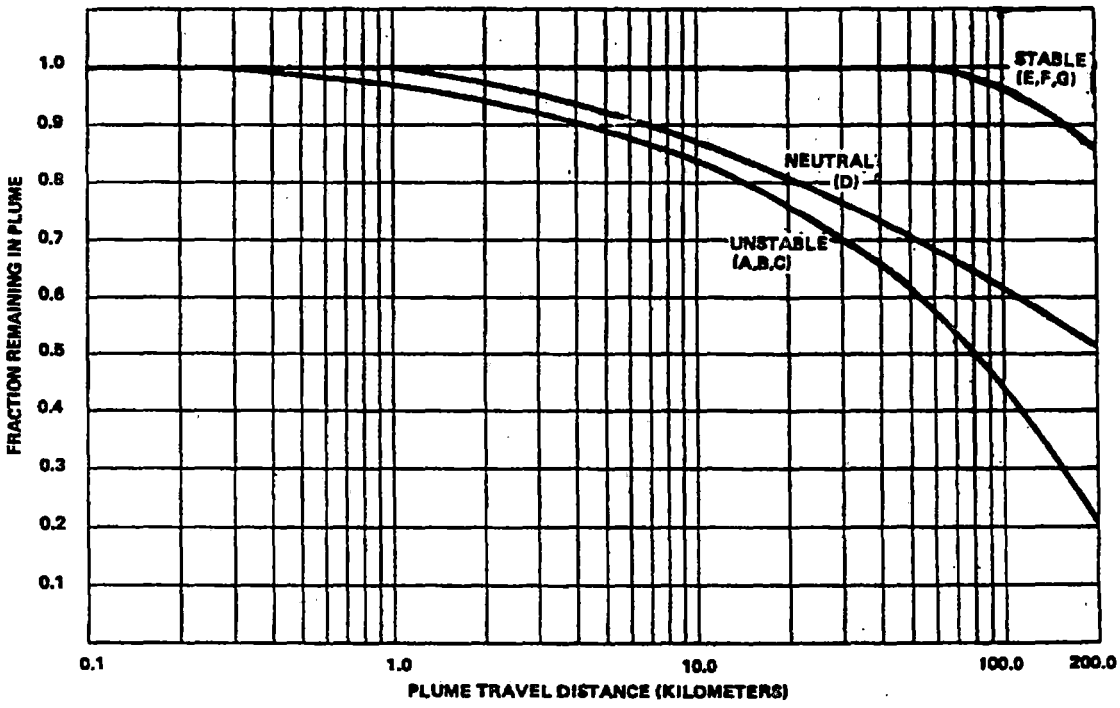

This graph is reproduced from Reference 5 (Figure 4).

Figure 8-5. Plume Depletion Effect for 60-Meter Releases

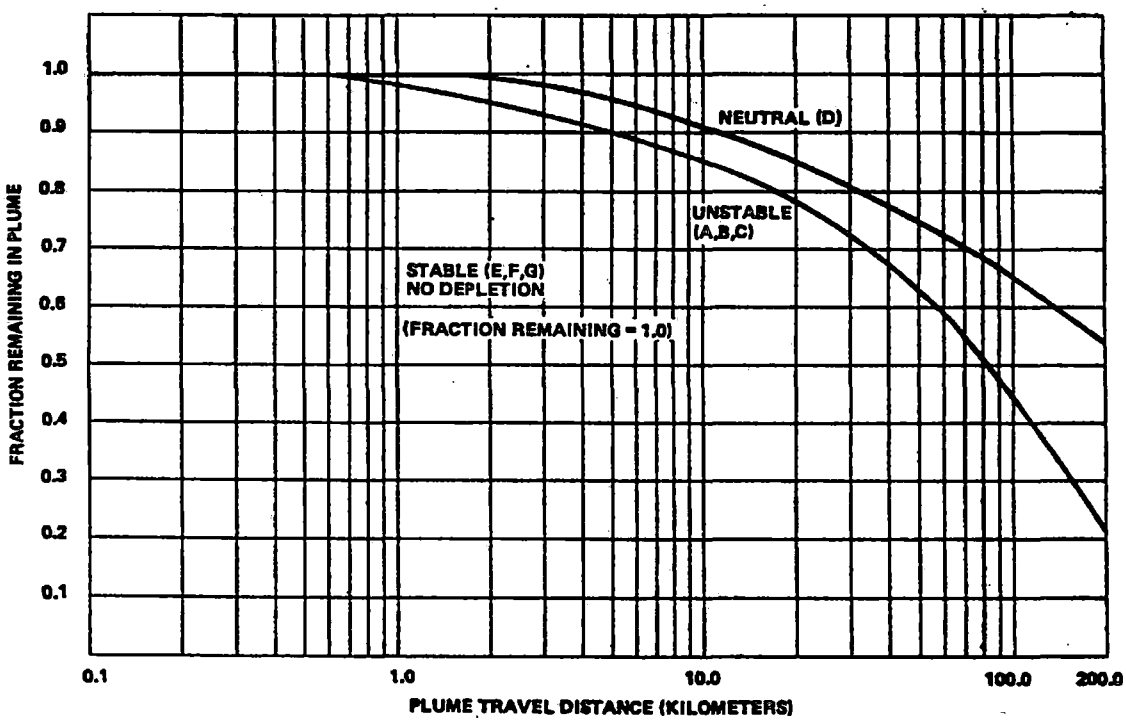

This graph is reproduced from Reference 5 (Figure 5).

Figure 8-6. Plume Depletion Effect for 100-Meter Releases

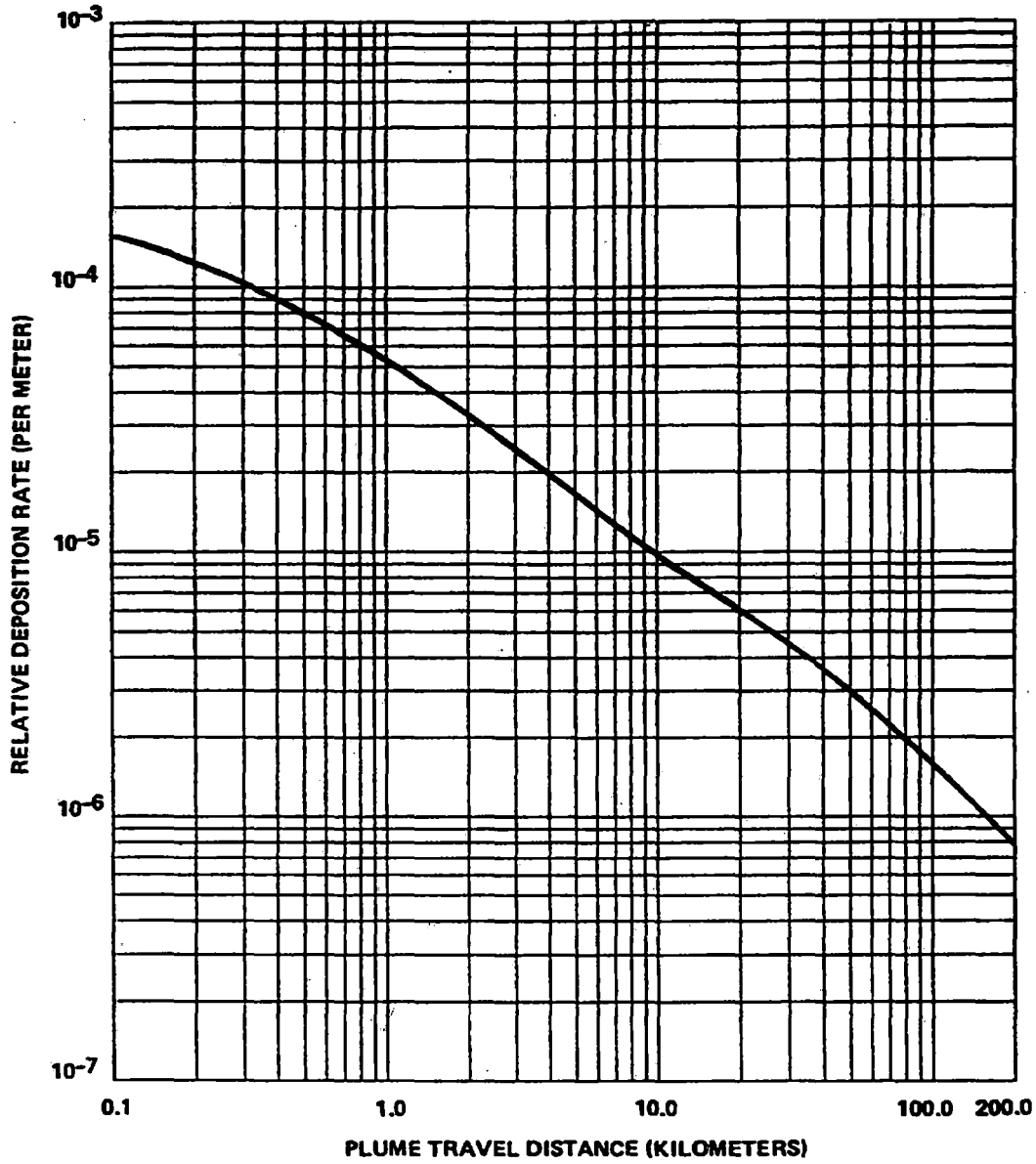

This graph is reproduced from Reference 5 (Figure 6).

Figure 8-7. Relative Deposition for Ground-Level Releases

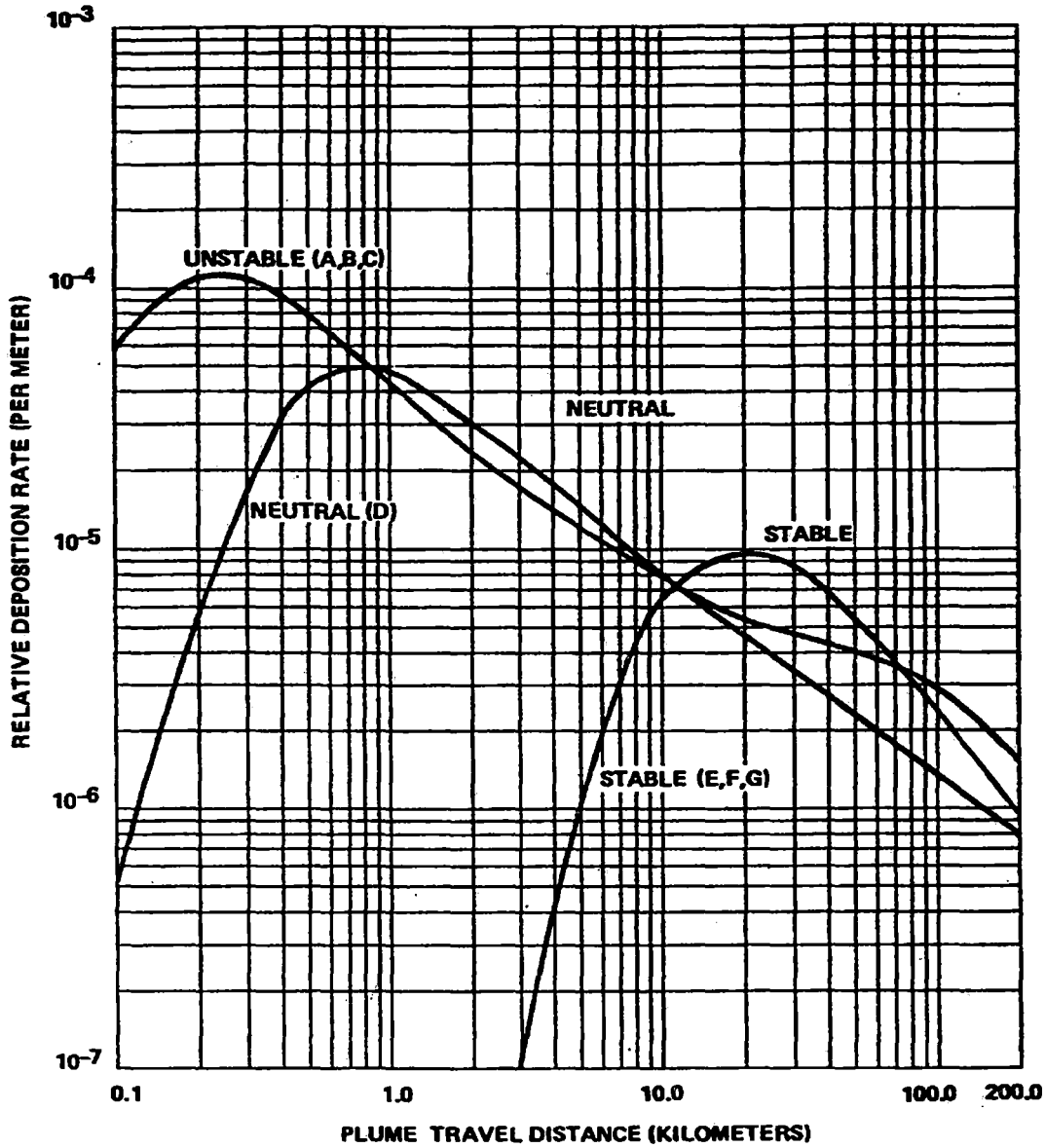

This graph is reproduced from Reference 5 (Figure 7).

Figure 8-8. Relative Deposition for 30-Meter Releases

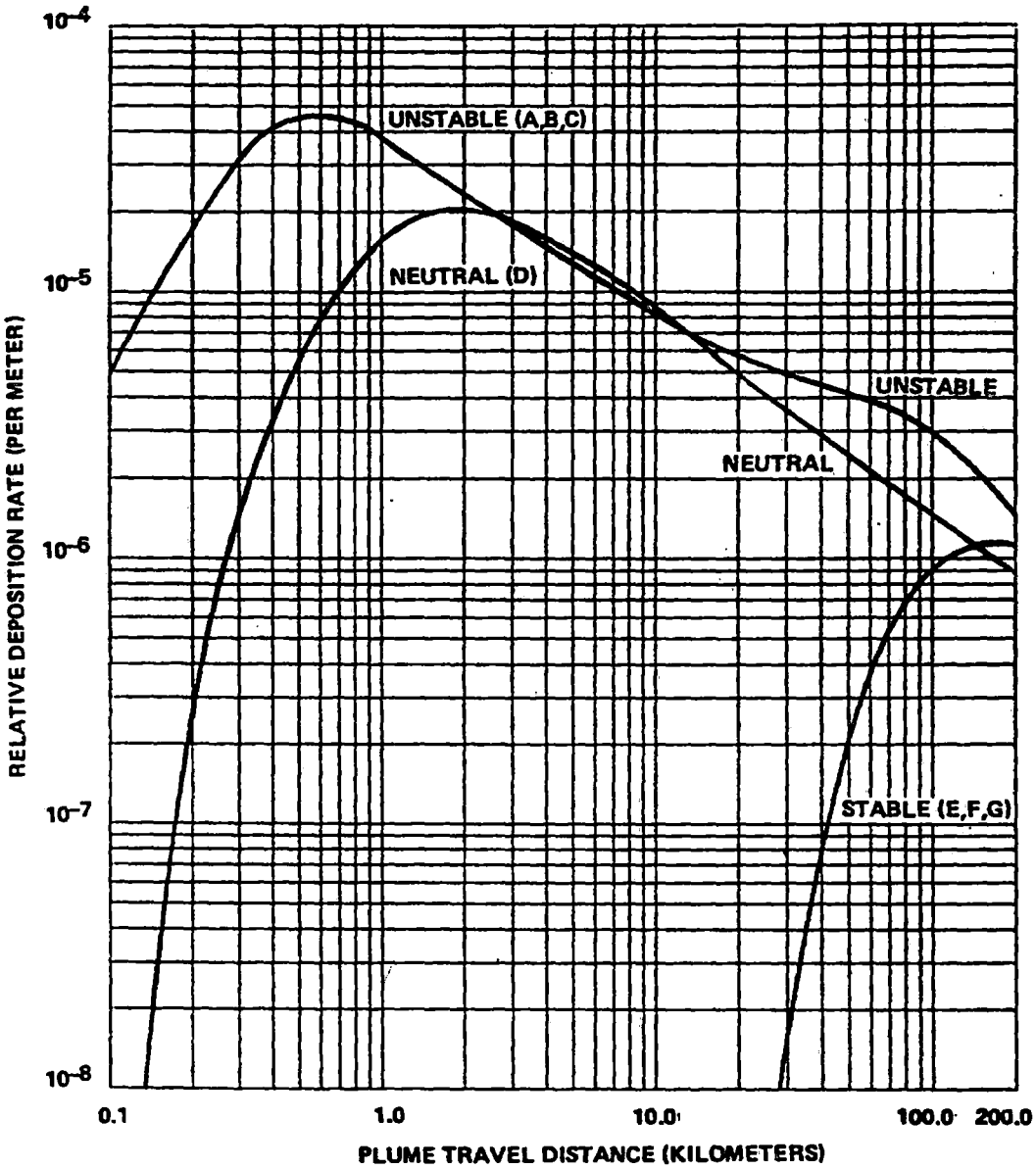

This graph is reproduced from Reference 5 (Figure 8).

Figure 8-9. Relative Deposition for 60-Meter Releases

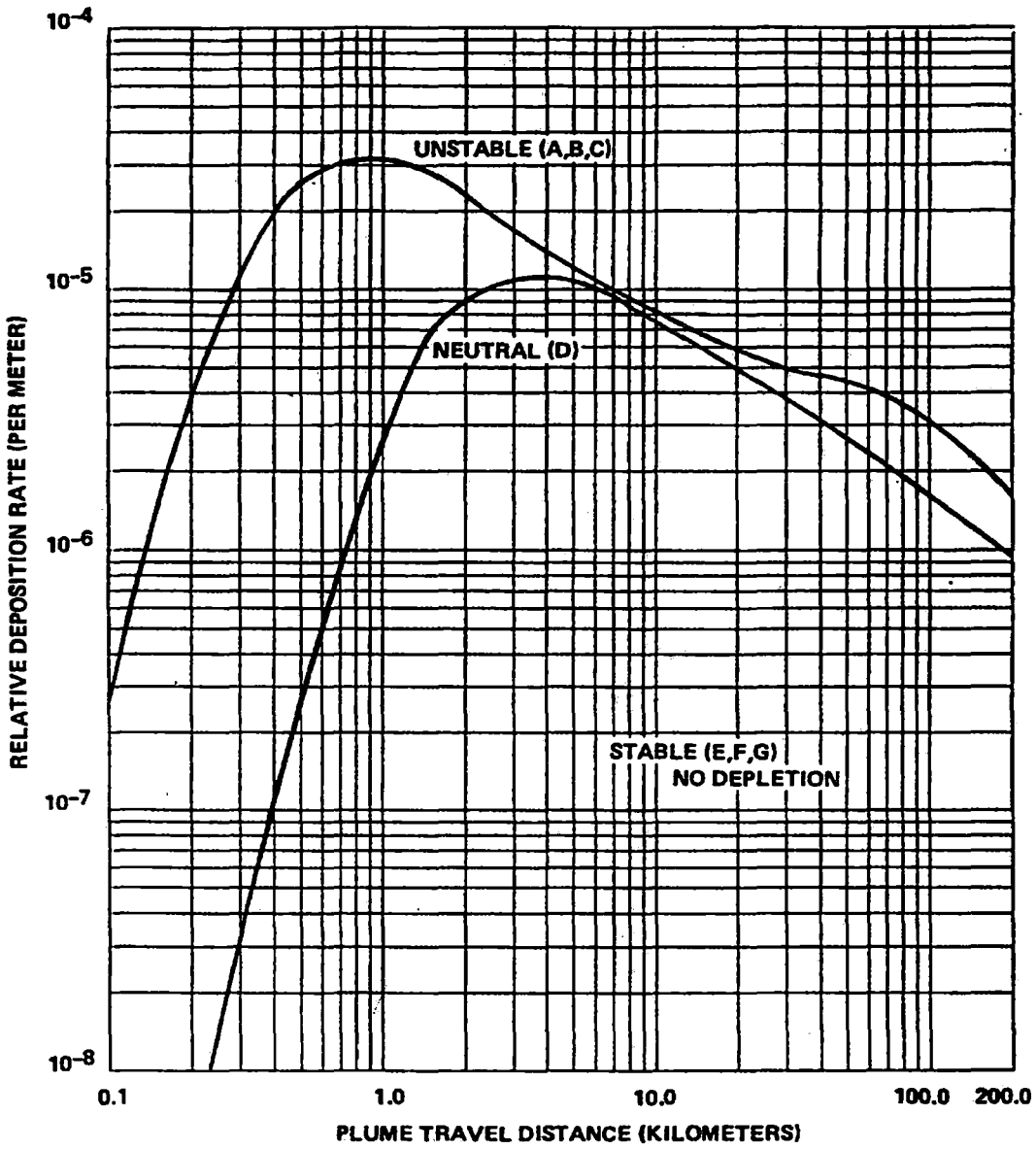

This graph is reproduced from Reference 5 (Figure 9).

Figure 8-10. Relative Deposition for 100-Meter (or Greater) Releases

CHAPTER 9
METHODS AND PARAMETERS FOR CALCULATION OF GASEOUS EFFLUENT PATHWAY DOSE FACTORS, R_{aipj}

9.1 INHALATION PATHWAY FACTOR

For the inhalation pathway, R_{aipj} in (mrem/y) per (μCi/m^3) is calculated as follows (Reference 1, Section 5.3.1.1):

$$R_{aipj} = K_1 \cdot (BR)_a \cdot (DFA)_{aij} \qquad \textbf{(9.1)}$$

where:

K_1 = the units conversion factor: 10^6 pCi/μCi.

$(BR)_a$ = the breathing rate of receptor age group a, in m^3/y, from Table 9-5.

$(DFA)_{aij}$ = the inhalation dose factor for receptor age group a, radionuclide i, and organ j, in mrem/pCi, from Table 9-7 through Table 9-10.

9.2 GROUND PLANE PATHWAY FACTOR

For the ground plane external exposure pathway, R_{aipj} in (m^2·mrem/y) per (μCi/s) is calculated as follows (Reference 1, Section 5.3.1.2):

$$R_{aipj} = K_1 \cdot K_2 \cdot (SHF) \cdot (DFG)_{ij} \cdot \left(\frac{1 - e^{-\lambda_i t}}{\lambda_i} \right) \quad \textbf{(9.2)}$$

where:

K_1 = the units conversion factor: 10^6 pCi/μCi.

K_2 = the units conversion factor: 8760 h/y.

(SHF) = the shielding factor due to structure (dimensionless). The value used for (SHF) is 0.7, from (Reference 3, Table E–15).

$(DFG)_{ij}$ = the ground plane dose factor for radionuclide i and organ j, in (mrem/h) per (pCi/m^2), from Table 9-15. Dose factors are the same for all age groups, and those for the total body also apply to all organs other than skin.

λ_i = the radioactive decay constant for radionuclide i, in s^{-1}. Values of λ_i used in effluent calculations should be based on decay data from a recognized and current source, such as Reference 20.

t = the exposure time, in s. The value used for t is 4.73 x 10^8 s (= 15 y), from (Reference 1, Section 5.3.1.2).

9.3 GARDEN VEGETATION PATHWAY FACTOR

For radionuclides other than tritium in the garden vegetation consumption pathway, R_{aipj} in (m^2·mrem/y) per (µCi/s) is calculated as follows (Reference 1, Section 5.3.1.5):

$$R_{aipj} = K_1 \cdot \frac{r}{Y_v(\lambda_i + \lambda_w)} \cdot (DFL)_{aij} \cdot \left(U_{aL} f_L e^{-\lambda_i t_L} + U_{aS} f_g e^{-\lambda_i t_{hv}}\right) \quad \textbf{(9.3)}$$

where:

K_1 = the units conversion factor: 10^6 pCi/µCi.

r = the fraction of deposited activity retained on the edible parts of garden vegetation (dimensionless). The value used for r is 1.0 for radioiodines and 0.2 for particulates, from (Reference 3, Table E–1).

Y_v = the areal density (agricultural productivity) of growing leafy garden vegetation, in kg/m^2, from Table 9-1.

λ_i = the radioactive decay constant for radionuclide i, in s^{-1}. Values of λ_i used in effluent calculations should be based on decay data from a recognized and current source, such as Reference 20.

λ_w = the rate constant for removal of activity on leaf and plant surfaces by weathering, in s^{-1}, from Table 9-1.

$(DFL)_{aij}$ = the ingestion dose factor for receptor age group a, radionuclide i, and organ j, in mrem/pCi, from Table 9-11 through Table 9-14.

U_{aL} = the consumption rate of fresh leafy garden vegetation by a receptor in age group a, in kg/y, from Table 9-5.

U_{aS} = the consumption rate of stored garden vegetation by a receptor in age group a, in kg/y, from Table 9-5.

f_L = the fraction of the annual intake of fresh leafy garden vegetation that is grown locally (dimensionless), from Table 9-1.

f_g = the fraction of the annual intake of stored garden vegetation that is grown locally (dimensionless), from Table 9-1.

t_L = the average time between harvest of fresh leafy garden vegetation and its consumption, in s, from Table 9-1.

t_{hv} = the average time between harvest of stored garden vegetation and its consumption, in s, from Table 9-1.

For tritium in the garden vegetation consumption pathway, R_{aipj} in (mrem/y) per (µCi/m^3) is calculated as follows (Reference 1, Section 5.3.1.5), based on the concentration in air rather than deposition onto the ground:

$$R_{aipj} = K_1 \cdot K_3 \cdot (DFL)_{aij} \cdot (U_{aL} f_L + U_{aS} f_g) \cdot 0.75 \cdot \left(\frac{0.5}{H}\right) \quad \textbf{(9.4)}$$

where:

K_3 = = the units conversion factor: 10^3 g/kg.

H = = the absolute humidity of atmospheric air, in g/m^3, from Table 9-1.

0.75 = = the fraction of the mass of total garden vegetation that is water (dimensionless).

0.5 = = the ratio of the specific activity of tritium in garden vegetation water to that in atmospheric water (dimensionless).

and other parameters are as defined above.

Table 9-1. Miscellaneous Parameters for the Garden Vegetation Pathway

The following parameter values are for use in calculating R_{aipj} for the garden vegetation pathway only. The terms themselves are defined in section 9.3.

Parameter	Value	Reference
Y_v	2.0 kg/m^2	Ref. 3, Table E-15
λw	5.73×10^{-7} s^{-1} (14-day half-life)	Ref. 1, page 33
f_L	1.0	Ref. 1, page 36
f_g	0.76	Ref. 1, page 33
t_L	8.6×10^4 s (1 day)	Ref. 3, Table E-15
t_{hv}	5.18×10^6 s (60 days)	Ref. 3, Table E-15
H	8 g/m^3	Ref. 3

9.4 GRASS-COW-MILK PATHWAY FACTOR

For radionuclides other than tritium in the grass-cow-milk pathway, R_{aipj} in (m^2·mrem/y) per (μCi/s) is calculated as follows (Reference 1, Section 5.3.1.3):

$$R_{aipj} = K_1 \cdot \frac{r}{(\lambda_i + \lambda_w)} \cdot Q_F \cdot U_{ap} \cdot F_{mi} \cdot (DFL)_{aij} \cdot \left[\frac{f_p f_s}{Y_p} + \frac{(1 - f_p f_s)\, e^{-\lambda_i t_{hm}}}{Y_s} \right] \cdot e^{-\lambda_i t_f} \qquad \textbf{(9.5)}$$

where:

K_1 = the units conversion factor: 10^6 pCi/μCi.

r = the fraction of deposited activity retained on the edible parts of vegetation (dimensionless). The value used for r is 1.0 for radioiodines and 0.2 for particulates, from (Reference 3, Table E–1).

λ_i = the radioactive decay constant for radionuclide i, in s^{-1}. Values of λ_i used in effluent calculations should be based on decay data from a recognized and current source, such as Reference 20.

λ_w = the rate constant for removal of activity on leaf and plant surfaces by weathering, in s^{-1}, from Table 9-2.

Q_F = the cow's consumption rate of feed, in kg/d, from Table 9-2.

U_{ap} the consumption rate of cow milk by a receptor in age group a, in L/y, from Table 9-5.

F_{mi} = the stable element transfer coefficient applicable to radionuclide i, for cow's milk, in d/L, from Table 9-6.

$(DFL)_{aij}$ = the ingestion dose factor for receptor age group a, radionuclide i, and organ j, in mrem/pCi, from Table 9-11 through Table 9-14.

f_p = the fraction of the year that the cow is on pasture (dimensionless), from Table 9-2.

f_s = the fraction of the cow's feed that is pasture grass while the cow is on pasture (dimensionless), from Table 9-2.

Y_p = the areal density (agricultural productivity) of growing pasture feed grass, in kg/m^2, from Table 9-2.

Y_s = the areal density (agricultural productivity) of growing stored feed, in kg/m^2, from Table 9-2.

t_{hm} = the transport time from harvest of stored feed to its consumption by the cow, in s, from Table 9-2.

t_f = the transport time from consumption of feed by the cow, to consumption of milk by the receptor, in s, from Table 9-2.

For tritium in the grass-cow-milk pathway, R_{aipj} in (mrem/y) per (µCi/m^3) is calculated as follows (Reference 1, Section 5.3.1.5), based on the concentration in air rather than deposition onto the ground:

$$R_{aipj} = K_1 \cdot K_3 \cdot Q_F \cdot U_{ap} \cdot F_{mi} \cdot (DFL)_{aij} \cdot 0.75 \cdot \left(\frac{0.5}{H}\right) \quad \textbf{(9.6)}$$

where:

K_3 = the units conversion factor: 10^3 g/kg.

H = the absolute humidity of atmospheric air, in g/m^3, from Table 9-2.

0.75 = the fraction of the mass of total vegetation that is water (dimensionless).

0.5 = the ratio of the specific activity of tritium in vegetation water to that in atmospheric water (dimensionless).

and other parameters are as defined above.

Table 9-2. Miscellaneous Parameters for the Grass-Cow-Milk Pathway

The following parameter values are for use in calculating R_{aipj} for the grass-cow-milk pathway only. The terms themselves are defined in section 9.4.

Parameter	Value	Reference
λ_w	5.73×10^{-7} s^{-1} (14-day half-life)	Ref. 1, page 33
Q_F	50 kg/d	Ref. 3, Table E-3
f_p	1.0	Ref. 1, page 33
f_s	1.0	Ref. 1, page 33
Y_p	0.7 kg/m^2	Ref. 3, Table E-15
Y_s	2.0 kg/m^2	Ref. 3, Table E-15
t_{hm}	7.78×10^6 s (90 days)	Ref. 3, Table E-15
t_f	1.73×10^5 s (2 days)	Ref. 3, Table E-15
H	8 g/m^3	Ref. 3

9.5 GRASS-GOAT-MILK PATHWAY FACTOR

For radionuclides other than tritium in the grass-goat-milk pathway, R_{aipj} in (m^2·mrem/y) per (µCi/s) is calculated as follows (Reference 1, Section 5.3.1.3):

$$R_{aipj} = K_1 \cdot \frac{r}{(\lambda_i + \lambda_w)} \cdot Q_F \cdot U_{ap} \cdot F_{mi} \cdot (DFL)_{aij} \cdot \left[\frac{f_p f_s}{Y_p} + \frac{(1 - f_p f_s)\, e^{-\lambda_i t_{hm}}}{Y_s} \right] \cdot e^{-\lambda_i t_f} \qquad \textbf{(9.7)}$$

where:

K_1 = the units conversion factor: 10^6 pCi/µCi.

r = the fraction of deposited activity retained on the edible parts of vegetation (dimensionless). The value used for r is 1.0 for radioiodines and 0.2 for particulates, from (Reference 3, Table E–1).

λ_i = the radioactive decay constant for radionuclide i, in s^{-1}. Values of λ_i used in effluent calculations should be based on decay data from a recognized and current source, such as Reference 20.

λ_w the rate constant for removal of activity on leaf and plant surfaces by weathering, in s^{-1}, from Table 9-3.

Q_F = the goat's consumption rate of feed, in kg/d, from Table 9-3.

U_{ap} = the consumption rate of goat milk by a receptor in age group a, in L/y, from Table 9-5.

F_{mi} = the stable element transfer coefficient applicable to radionuclide i, for goat's milk, in d/L, from Table 9-6.

$(DFL)_{aij}$ = the ingestion dose factor for receptor age group a, radionuclide i, and organ j, in mrem/pCi, from Table 9-11 through Table 9-14.

f_p = the fraction of the year that the goat is on pasture (dimensionless), from Table 9-3.

f_s = the fraction of the goat's feed that is pasture grass while the goat is on pasture (dimensionless), from Table 9-3.

Y_p = the areal density (agricultural productivity) of growing pasture feed grass, in kg/m^2, from Table 9-3.

Y_s = the areal density (agricultural productivity) of growing stored feed, in kg/m^2, from Table 9-3.

t_{hm} = the transport time from harvest of stored feed to its consumption by the goat, in s, from Table 9-3.

t_f = the transport time from consumption of feed by the goat, to consumption of milk by the receptor, in s, from Table 9-3.

For tritium in the grass-goat-milk pathway, R_{aipj} in (mrem/y) per (µCi/m^3) is calculated as follows (Reference 1, Section 5.3.1.5), based on the concentration in air rather than deposition onto the ground:

$$R_{aipj} = K_1 \cdot K_3 \cdot Q_F \cdot U_{ap} \cdot F_{mi} \cdot (DFL)_{aij} \cdot 0.75 \cdot \left(\frac{0.5}{H}\right) \quad \textbf{(9.8)}$$

where:

K_3 = the units conversion factor: 10^3 g/kg.

H = the absolute humidity of atmospheric air, in g/m^3, from Table 9-3.

0.75 = the fraction of the mass of total vegetation that is water (dimensionless).

0.5 = the ratio of the specific activity of tritium in vegetation water to that in atmospheric water (dimensionless).

and other parameters are as defined above.

Table 9-3. Miscellaneous Parameters for the Grass-Goat-Milk Pathway

The following parameter values are for use in calculating R_{aipj} for the grass-goat-milk pathway only. The terms themselves are defined in section 9-5.

Parameter	Value	Reference
λ_w	5.73×10^{-7} s^{-1} (14-day half-life)	Ref. 1, page 33
Q_F	6 kg/d	Ref. 3, Table E-3
f_p	1.0	Ref. 1, page 33
f_s	1.0	Ref. 1, page 33
Y_p	0.7 kg/m^2	Ref. 3, Table E-15
Y_s	2.0 kg/m^2	Ref. 3, Table E-15
t_{hm}	7.78×10^6 s (90 days)	Ref. 3, Table E-15
t_f	1.73×10^5 s (2 days)	Ref. 3, Table E-15
H	8 g/m^3	Ref. 3

9.6 GRASS-COW-MEAT PATHWAY FACTOR

For radionuclides other than tritium in the grass-cow-meat pathway, R_{aipj} in (m^2·mrem/y) per (µCi/s) is calculated as follows (Reference 1, Section 5.3.1.4):

$$R_{aipj} = K_1 \cdot \frac{r}{(\lambda_i + \lambda_w)} \cdot Q_F \cdot U_{ap} \cdot F_{fi} \cdot (DFL)_{aij} \cdot \left[\frac{f_p f_s}{Y_p} + \frac{(1 - f_p f_s)\, e^{-\lambda_i t_{hm}}}{Y_s} \right] \cdot e^{-\lambda_i t_f} \qquad \textbf{(9.9)}$$

where:

K_1 = the units conversion factor: 10^6 pCi/µCi.

r = the fraction of deposited activity retained on the edible parts of vegetation (dimensionless). The value used for r is 1.0 for radioiodines and 0.2 for particulates, from (Reference 3, Table E–1).

λ_i = the radioactive decay constant for radionuclide i, in s^{-1}. Values of λ_i used in effluent calculations should be based on decay data from a recognized and current source, such as Reference 20.

λ_w = the rate constant for removal of activity on leaf and plant surfaces by weathering, in s^{-1}, from Table 9-4.

Q_F = the cow's consumption rate of feed, in kg/d, from Table 9-4.

U_{ap} = the consumption rate of meat by a receptor in age group a, in kg/y, from Table 9-5.

F_{fi} = the stable element transfer coefficient applicable to radionuclide i, for meat, in d/kg, from Table 9-6.

$(DFL)_{aij}$ = the ingestion dose factor for receptor age group a, radionuclide i, and organ j, in mrem/pCi, from Table 9-11 through Table 9-14.

f_p = the fraction of the year that the cow is on pasture (dimensionless), from Table 9-4.

f_s = the fraction of the cow's feed that is pasture grass while the cow is on pasture (dimensionless), from Table 9-4.

Y_p = the areal density (agricultural productivity) of growing pasture feed grass, in kg/m^2, from Table 9-4.

Y_s = the areal density (agricultural productivity) of growing stored feed, in kg/m^2, from Table 9-4.

t_{hm} = the transport time from harvest of stored feed to its consumption by the cow, in s, from Table 9-4.

t_f = the transport time from consumption of feed by the cow, to consumption of meat by the receptor, in s, from Table 9-4.

For tritium in the grass-cow-meat pathway, R_{aipj} in (mrem/y) per (μCi/m^3) is calculated as follows (Reference 1, Section 5.3.1.4), based on the concentration in air rather than deposition onto the ground:

$$R_{aipj} = K_1 \cdot K_3 \cdot Q_F \cdot U_{ap} \cdot F_{f_i} \cdot (DFL)_{aij} \cdot 0.75 \cdot \left(\frac{0.5}{H}\right) \quad \textbf{(9.10)}$$

where:

K_3 = the units conversion factor: 10^3 g/kg.

H = the absolute humidity of atmospheric air, in g/m^3, from Table 9-4.

0.75 = the fraction of the mass of total vegetation that is water (dimensionless).

0.5 = the ratio of the specific activity of tritium in vegetation water to that in atmospheric water (dimensionless).

and other parameters are as defined above.

Table 9-4. Miscellaneous Parameters for the Grass-Cow-Meat Pathway

The following parameter values are for use in calculating R_{aipj} for the grass-cow-meat pathway only. The terms themselves are defined in section 9-6.

Parameter	Value	Reference
λ_w	5.73×10^{-7} s^{-1} (14-day half-life)	Ref. 1, page 33
Q_F	50 kg/d	Ref. 3, Table E-3
f_p	1.0	Ref. 1, page 33
f_s	1.0	Ref. 1, page 33
Y_p	0.7 kg/m^2	Ref. 3, Table E-15
Y_s	2.0 kg/m^2	Ref. 3, Table E-15
t_{hm}	7.78×10^6 s (90 days)	Ref. 3, Table E-15
t_f	1.73×10^6 s (20 days)	Ref. 3, Table E-15
H	8 g/m^3	Ref. 3

Table 9-5. Individual Usage Factors

Usage Factor	Receptor Age Group			
	Infant	Child	Teenager	Adult
Milk Consumption Rate, U_{ap} (L/y)	330	330	400	310
Meat Consumption Rate, U_{ap} (kg/y)	0	41	65	110
Fresh Leafy Garden Vegetation Consumption Rate, U_{aL} (kg/y)	0	26	42	64
Stored Garden Vegetation Consumption Rate, U_{aS} (kg/y)	0	520	630	520
Breathing Rate, $(BR)_a$ (m^3/y)	1400	3700	8000	8000

All values are from Reference 3, Table E-5.

Table 9-6. Stable Element Transfer Data

Element	Cow Milk F_m (d/L)*	Goat Milk F_m (d/L)+	Meat F_f (d/kg)*
H	1.0 E-02	1.7 E-01	1.2 E-02
C	1.2 E-02	1.0 E-01	3.1 E-02
Na	4.0 E-02	4.0 E-02	3.0 E-02
P	2.5 E-02	2.5 E-01	4.6 E-02
Cr	2.2 E-03	2.2 E-03	2.4 E-03
Mn	2.5 E-04	2.5 E-04	8.0 E-04
Fe	1.2 E-03	1.3 E-04	4.0 E-02
Co	1.0 E-03	1.0 E-03	1.3 E-02
Ni	6.7 E-03	6.7 E-03	5.3 E-02
Cu	1.4 E-02	1.3 E-02	8.0 E-03
Zn	3.9 E-02	3.9 E-02	3.0 E-02
Br	5.0 E-02	5.0 E-02	2.6 E-02
Rb	3.0 E-02	3.0 E-02	3.1 E-02
Sr	8.0 E-04	1.4 E-02	6.0 E-04
Y	1.0 E-05	1.0 E-05	4.6 E-03
Zr	5.0 E-06	5.0 E-06	3.4 E-02
Nb	2.5 E-03	2.5 E-03	2.8 E-01
Mo	7.5 E-03	7.5 E-03	8.0 E-03
Tc	2.5 E-02	2.5 E-02	4.0 E-01
Ru	1.0 E-06	1.0 E-06	4.0 E-01
Rh	1.0 E-02	1.0 E-02	1.5 E-03
Ag	5.0 E-02	5.0 E-02	1.7 E-02
Sb	1.5 E-03	1.5 E-03	4.0 E-03
Te	1.0 E-03	1.0 E-03	7.7 E-02
I	6.0 E-03	6.0 E-02	2.9 E-03
Cs	1.2 E-02	3.0 E-01	4.0 E-03
Ba	4.0 E-04	4.0 E-04	3.2 E-03
La	5.0 E-06	5.0 E-06	2.0 E-04
Ce	1.0 E-04	1.0 E-04	1.2 E-03
Pr	5.0 E-06	5.0 E-06	4.7 E-03
Nd	5.0 E-06	5.0 E-06	3.3 E-03
W	5.0 E-04	5.0 E-04	1.3 E-03
Np	5.0 E-06	5.0 E-06	2.0 E-04

* - Values from Reference 3 (Table E-1) except as follows: Reference 2 (Table C-5) for Br and Sb.

\+ - Values from Reference 3, Table E-2 for H, C, P, Fe, Cu, Sr, I, and Cs in goat milk, and Table E-1 for all other elements in cow milk, except as follows: Reference 2 (Table C-5) for Br and Sb in cow milk.

Table 9-7. Inhalation Dose Factors for the Infant Age Group

Nuclide	Bone	Liver	T.Body	Thyroid	Kidney	Lung	GI-LLI
H-3	No Data	4.62E-07	4.62E-07	4.62E-07	4.62E-07	4.62E-07	4.62E-07
C-14	1.89E-05	3.79E-06	3.79E-06	3.79E-06	3.79E-06	3.79E-06	3.79E-06
Na-24	7.54E-06	7.54E-06	7.54E-06	7.54E-06	7.54E-06	7.54E-06	7.54E-06
P-32	1.45E-03	8.03E-05	5.53E-05	No Data	No Data	No Data	1.15E-05
Cr-51	No Data	No Data	6.39E-08	4.11E-08	9.45E-09	9.17E-06	2.55E-07
Mn-54	No Data	1.81E-05	3.56E-06	No Data	3.56E-06	7.14E-04	5.04E-06
Mn-56	No Data	1.10E-09	1.58E-10	No Data	7.86E-10	8.95E-06	5.12E-05
Fe-55	1.41E-05	8.39E-06	2.38E-06	No Data	No Data	6.21E-05	7.82E-07
Fe-59	9.69E-06	1.68E-05	6.77E-06	No Data	No Data	7.25E-04	1.77E-05
Co-58	No Data	8.71E-07	1.30E-06	No Data	No Data	5.55E-04	7.95E-06
Co-60	No Data	5.73E-06	8.41E-06	No Data	No Data	3.22E-03	2.28E-05
Ni-63	2.42E-04	1.46E-05	8.29E-06	No Data	No Data	1.49E-04	1.73E-06
Ni-65	1.71E-09	2.03E-10	8.79E-11	No Data	No Data	5.80E-06	3.58E-05
Cu-64	No Data	1.34E-09	5.53E-10	No Data	2.84E-09	6.64E-06	1.07E-05
Zn-65	1.38E-05	4.47E-05	2.22E-05	No Data	2.32E-05	4.62E-04	3.67E-05
Zn-69	3.85E-11	6.91E-11	5.13E-12	No Data	2.87E-11	1.05E-06	9.44E-06
Br-83	No Data	No Data	2.72E-07	No Data	No Data	No Data	No Data
Br-84	No Data	No Data	2.86E-07	No Data	No Data	No Data	No Data
Br-85	No Data	No Data	1.46E-08	No Data	No Data	No Data	No Data
Rb-86	No Data	1.36E-04	6.30E-05	No Data	No Data	No Data	2.17E-06
Rb-88	No Data	3.98E-07	2.05E-07	No Data	No Data	No Data	2.42E-07
Rb-89	No Data	2.29E-07	1.47E-07	No Data	No Data	No Data	4.87E-08
Sr-89	2.84E-04	No Data	8.15E-06	No Data	No Data	1.45E-03	4.57E-05
Sr-90	2.92E-02	No Data	1.85E-03	No Data	No Data	8.03E-03	9.36E-05
Sr-91	6.83E-08	No Data	2.47E-09	No Data	No Data	3.76E-05	5.24E-05

All values are in (mrem/pCi inhaled). They are obtained from Reference 3 (Table E-10). Neither Reference 2 nor Reference 3 contains data for Rh–105, Sb–124, or Sb–125.

Table 9-7 (contd). Inhalation Dose Factors for the Infant Age Group

Nuclide	Bone	Liver	T.Body	Thyroid	Kidney	Lung	GI-LLI
Sr-92	7.50E-09	No Data	2.79E-10	No Data	No Data	1.70E-05	1.00E-04
Y-90	2.35E-06	No Data	6.30E-08	No Data	No Data	1.92E-04	7.43E-05
Y-91m	2.91E-10	No Data	9.90E-12	No Data	No Data	1.99E-06	1.68E-06
Y-91	4.20E-04	No Data	1.12E-05	No Data	No Data	1.75E-03	5.02E-05
Y-92	1.17E-08	No Data	3.29E-10	No Data	No Data	1.75E-05	9.04E-05
Y-93	1.07E-07	No Data	2.91E-09	No Data	No Data	5.46E-05	1.19E-04
Zr-95	8.24E-05	1.99E-05	1.45E-05	No Data	2.22E-05	1.25E-03	1.55E-05
Zr-97	1.07E-07	1.83E-08	8.36E-09	No Data	1.85E-08	7.88E-05	1.00E-04
Nb-95	1.12E-05	4.59E-06	2.70E-06	No Data	3.37E-06	3.42E-04	9.05E-06
Mo-99	No Data	1.18E-07	2.31E-08	No Data	1.89E-07	9.63E-05	3.48E-05
Tc-99m	9.98E-13	2.06E-12	2.66E-11	No Data	2.22E-11	5.79E-07	1.45E-06
Tc-101	4.65E-14	5.88E-14	5.80E-13	No Data	6.99E-13	4.17E-07	6.03E-07
Ru-103	1.44E-06	No Data	4.85E-07	No Data	3.03E-06	3.94E-04	1.15E-05
Ru-105	8.74E-10	No Data	2.93E-10	No Data	6.42E-10	1.12E-05	3.46E-05
Ru-106	6.20E-05	No Data	7.77E-06	No Data	7.61E-05	8.26E-03	1.17E-04
Rh-105	No Data	No Data	No Data	No Data	No Data	No Data	No Data
Ag-110m	7.13E-06	5.16E-06	3.57E-06	No Data	7.80E-06	2.62E-03	2.36E-05
Sb-124	No Data	No Data	No Data	No Data	No Data	No Data	No Data
Sb-125	No Data	No Data	No Data	No Data	No Data	No Data	No Data
Te-125m	3.40E-06	1.42E-06	4.70E-07	1.16E-06	No Data	3.19E-04	9.22E-06
Te-127m	1.19E-05	4.93E-06	1.48E-06	3.48E-06	2.68E-05	9.37E-04	1.95E-05
Te-127	1.59E-09	6.81E-10	3.49E-10	1.32E-09	3.47E-09	7.39E-06	1.74E-05
Te-129m	1.01E-05	4.35E-06	1.59E-06	3.91E-06	2.27E-05	1.20E-03	4.93E-05
Te-129	5.63E-11	2.48E-11	1.34E-11	4.82E-11	1.25E-10	2.14E-06	1.88E-05
Te-131m	7.62E-08	3.93E-08	2.59E-08	6.38E-08	1.89E-07	1.42E-04	8.51E-05
Te-131	1.24E-11	5.87E-12	3.57E-12	1.13E-11	2.85E-11	1.47E-06	5.87E-06

Table 9-7 (contd). Inhalation Dose Factors for the Infant Age Group

Nuclide	Bone	Liver	T.Body	Thyroid	Kidney	Lung	GI-LLI
Te-132	2.66E-07	1.69E-07	1.26E-07	1.99E-07	7.39E-07	2.43E-04	3.15E-05
I-130	4.54E-06	9.91E-06	3.98E-06	1.14E-03	1.09E-05	No Data	1.42E-06
I-131	2.71E-05	3.17E-05	1.40E-05	1.06E-02	3.70E-05	No Data	7.56E-07
I-132	1.21E-06	2.53E-06	8.99E-07	1.21E-04	2.82E-06	No Data	1.36E-06
I-133	9.46E-06	1.37E-05	4.00E-06	2.54E-03	1.60E-05	No Data	1.54E-06
I-134	6.58E-07	1.34E-06	4.75E-07	3.18E-05	1.49E-06	No Data	9.21E-07
I-135	2.76E-06	5.43E-06	1.98E-06	4.97E-04	6.05E-06	No Data	1.31E-06
Cs-134	2.83E-04	5.02E-04	5.32E-05	No Data	1.36E-04	5.69E-05	9.53E-07
Cs-136	3.45E-05	9.61E-05	3.78E-05	No Data	4.03E-05	8.40E-06	1.02E-06
Cs-137	3.92E-04	4.37E-04	3.25E-05	No Data	1.23E-04	5.09E-05	9.53E-07
Cs-138	3.61E-07	5.58E-07	2.84E-07	No Data	2.93E-07	4.67E-08	6.26E-07
Ba-139	1.06E-09	7.03E-13	3.07E-11	No Data	4.23E-13	4.25E-06	3.64E-05
Ba-140	4.00E-05	4.00E-08	2.07E-06	No Data	9.59E-09	1.14E-03	2.74E-05
Ba-141	1.12E-10	7.70E-14	3.55E-12	No Data	4.64E-14	2.12E-06	3.39E-06
Ba-142	2.84E-11	2.36E-14	1.40E-12	No Data	1.36E-14	1.11E-06	4.95E-07
La-140	3.61E-07	1.43E-07	3.68E-08	No Data	No Data	1.20E-04	6.06E-05
La-142	7.36E-10	2.69E-10	6.46E-11	No Data	No Data	5.87E-06	4.25E-05
Ce-141	1.98E-05	1.19E-05	1.42E-06	No Data	3.75E-06	3.69E-04	1.54E-05
Ce-143	2.09E-07	1.38E-07	1.58E-08	No Data	4.03E-08	8.30E-05	3.55E-05
Ce-144	2.28E-03	8.65E-04	1.26E-04	No Data	3.84E-04	7.03E-03	1.06E-04
Pr-143	1.00E-05	3.74E-06	4.99E-07	No Data	1.41E-06	3.09E-04	2.66E-05
Pr-144	3.42E-11	1.32E-11	1.72E-12	No Data	4.80E-12	1.15E-06	3.06E-06
Nd-147	5.67E-06	5.81E-06	3.57E-07	No Data	2.25E-06	2.30E-04	2.23E-05
W-187	9.26E-09	6.44E-09	2.23E-09	No Data	No Data	2.83E-05	2.54E-05
Np-239	2.65E-07	2.37E-08	1.34E-08	No Data	4.73E-08	4.25E-05	1.78E-05

Table 9-8. Inhalation Dose Factors for the Child Age Group

Nuclide	Bone	Liver	T. Body	Thyroid	Kidney	Lung	GI-LLI
H-3	No Data	3.04E-07	3.04E-07	3.04E-07	3.04E-07	3.04E-07	3.04E-07
C-14	9.70E-06	1.82E-06	1.82E-06	1.82E-06	1.82E-06	1.82E-06	1.82E-06
Na-24	4.35E-06	4.35E-06	4.35E-06	4.35E-06	4.35E-06	4.35E-06	4.35E-06
P-32	7.04E-04	3.09E-05	2.67E-05	No Data	No Data	No Data	1.14E-05
Cr-51	No Data	No Data	4.17E-08	2.31E-08	6.57E-09	4.59E-06	2.93E-07
Mn-54	No Data	1.16E-05	2.57E-06	No Data	2.71E-06	4.26E-04	6.19E-06
Mn-56	No Data	4.48E-10	8.43E-11	No Data	4.52E-10	3.55E-06	3.33E-05
Fe-55	1.28E-05	6.80E-06	2.10E-06	No Data	No Data	3.00E-05	7.75E-07
Fe-59	5.59E-06	9.04E-06	4.51E-06	No Data	No Data	3.43E-04	1.91E-05
Co-58	No Data	4.79E-07	8.55E-07	No Data	No Data	2.99E-04	9.29E-06
Co-60	No Data	3.55E-06	6.12E-06	No Data	No Data	1.91E-03	2.60E-05
Ni-63	2.22E-04	1.25E-05	7.56E-06	No Data	No Data	7.43E-05	1.71E-06
Ni-65	8.08E-10	7.99E-11	4.44E-11	No Data	No Data	2.21E-06	2.27E-05
Cu-64	No Data	5.39E-10	2.90E-10	No Data	1.63E-09	2.59E-06	9.92E-06
Zn-65	1.15E-05	3.06E-05	1.90E-05	No Data	1.93E-05	2.69E-04	4.41E-06
Zn-69	1.81E-11	2.61E-11	2.41E-12	No Data	1.58E-11	3.84E-07	2.75E-06
Br-83	No Data	No Data	1.28E-07	No Data	No Data	No Data	No Data
Br-84	No Data	No Data	1.48E-07	No Data	No Data	No Data	No Data
Br-85	No Data	No Data	6.84E-09	No Data	No Data	No Data	No Data
Rb-86	No Data	5.36E-05	3.09E-05	No Data	No Data	No Data	2.16E-06
Rb-88	No Data	1.52E-07	9.90E-08	No Data	No Data	No Data	4.66E-09
Rb-89	No Data	9.33E-08	7.83E-08	No Data	No Data	No Data	5.11E-10
Sr-89	1.62E-04	No Data	4.66E-06	No Data	No Data	5.83E-04	4.52E-05
Sr-90	2.73E-02	No Data	1.74E-03	No Data	No Data	3.99E-03	9.28E-05
Sr-91	3.28E-08	No Data	1.24E-09	No Data	No Data	1.44E-05	4.70E-05

All values are in (mrem/pCi inhaled). They are obtained from Reference 3 (Table E-9). Neither Reference 2 nor Reference 3 contains data for Rh–105, Sb–124, or Sb–125.

Table 9-8 (contd). Inhalation Dose Factors for the Child Age Group

Nuclide	Bone	Liver	T.Body	Thyroid	Kidney	Lung	GI-LLI
Sr-92	3.54E-09	No Data	1.42E-10	No Data	No Data	6.49E-06	6.55E-05
Y-90	1.11E-06	No Data	2.99E-08	No Data	No Data	7.07E-05	7.24E-05
Y-91m	1.37E-10	No Data	4.98E-12	No Data	No Data	7.60E-07	4.64E-07
Y-91	2.47E-04	No Data	6.59E-06	No Data	No Data	7.10E-04	4.97E-05
Y-92	5.50E-09	No Data	1.57E-10	No Data	No Data	6.46E-06	6.46E-05
Y-93	5.04E-08	No Data	1.38E-09	No Data	No Data	2.01E-05	1.05E-04
Zr-95	5.13E-05	1.13E-05	1.00E-05	No Data	1.61E-05	6.03E-04	1.65E-05
Zr-97	5.07E-08	7.34E-09	4.32E-09	No Data	1.05E-08	3.06E-05	9.49E-05
Nb-95	6.35E-06	2.48E-06	1.77E-06	No Data	2.33E-06	1.66E-04	1.00E-05
Mo-99	No Data	4.66E-08	1.15E-08	No Data	1.06E-07	3.66E-05	3.42E-05
Tc-99m	4.81E-13	9.41E-13	1.56E-11	No Data	1.37E-11	2.57E-07	1.30E-06
Tc-101	2.19E-14	2.30E-14	2.91E-13	No Data	3.92E-13	1.58E-07	4.41E-09
Ru-103	7.55E-07	No Data	2.90E-07	No Data	1.90E-06	1.79E-04	1.21E-05
Ru-105	4.13E-10	No Data	1.50E-10	No Data	3.63E-10	4.30E-06	2.69E-05
Ru-106	3.68E-05	No Data	4.57E-06	No Data	4.97E-05	3.87E-03	1.16E-04
Rh-105	No Data	No Data	No Data	No Data	No Data	No Data	No Data
Ag-110m	4.56E-06	3.08E-06	2.47E-06	No Data	5.74E-06	1.48E-03	2.71E-05
Sb-124	No Data	No Data	No Data	No Data	No Data	No Data	No Data
Sb-125	No Data	No Data	No Data	No Data	No Data	No Data	No Data
Te-125m	1.82E-06	6.29E-07	2.47E-07	5.20E-07	No Data	1.29E-04	9.13E-06
Te-127m	6.72E-06	2.31E-06	8.16E-07	1.64E-06	1.72E-05	4.00E-04	1.93E-05
Te-127	7.49E-10	2.57E-10	1.65E-10	5.30E-10	1.91E-09	2.71E-06	1.52E-05
Te-129m	5.19E-06	1.85E-06	8.22E-07	1.71E-06	1.36E-05	4.76E-04	4.91E-05
Te-129	2.64E-11	9.45E-12	6.44E-12	1.93E-11	6.94E-11	7.93E-07	6.89E-06
Te-131m	3.63E-08	1.60E-08	1.37E-08	2.64E-08	1.08E-07	5.56E-05	8.32E-05
Te-131	5.87E-12	2.28E-12	1.78E-12	4.59E-12	1.59E-11	5.55E-07	3.60E-07

Table 9-8 (contd). Inhalation Dose Factors for the Child Age Group

Nuclide	Bone	Liver	T.Body	Thyroid	Kidney	Lung	GI-LLI
Te-132	1.30E-07	7.36E-08	7.12E-08	8.58E-08	4.79E-07	1.02E-04	3.72E-05
I-130	2.21E-06	4.43E-06	2.28E-06	4.99E-04	6.61E-06	No Data	1.38E-06
I-131	1.30E-05	1.30E-05	7.37E-06	4.39E-03	2.13E-05	No Data	7.68E-07
I-132	5.72E-07	1.10E-06	5.07E-07	5.23E-05	1.69E-06	No Data	8.65E-07
I-133	4.48E-06	5.49E-06	2.08E-06	1.04E-03	9.13E-06	No Data	1.48E-06
I-134	3.17E-07	5.84E-07	2.69E-07	1.37E-05	8.92E-07	No Data	2.58E-07
I-135	1.33E-06	2.36E-06	1.12E-06	2.14E-04	3.62E-06	No Data	1.20E-06
Cs-134	1.76E-04	2.74E-04	6.07E-05	No Data	8.93E-05	3.27E-05	1.04E-06
Cs-136	1.76E-05	4.62E-05	3.14E-05	No Data	2.58E-05	3.93E-06	1.13E-06
Cs-137	2.45E-04	2.23E-04	3.47E-05	No Data	7.63E-05	2.81E-05	9.78E-07
Cs-138	1.71E-07	2.27E-07	1.50E-07	No Data	1.68E-07	1.84E-08	7.29E-08
Ba-139	4.98E-10	2.66E-13	1.45E-11	No Data	2.33E-13	1.56E-06	1.56E-05
Ba-140	2.00E-05	1.75E-08	1.17E-06	No Data	5.71E-09	4.71E-04	2.75E-05
Ba-141	5.29E-11	2.95E-14	1.72E-12	No Data	2.56E-14	7.89E-07	7.44E-08
Ba-142	1.35E-11	9.73E-15	7.54E-13	No Data	7.87E-15	4.44E-07	7.41E-10
La-140	1.74E-07	6.08E-08	2.04E-08	No Data	No Data	4.94E-05	6.10E-05
La-142	3.50E-10	1.11E-10	3.49E-11	No Data	No Data	2.35E-06	2.05E-05
Ce-141	1.06E-05	5.28E-06	7.83E-07	No Data	2.31E-06	1.47E-04	1.53E-05
Ce-143	9.89E-08	5.37E-08	7.77E-09	No Data	2.26E-08	3.12E-05	3.44E-05
Ce-144	1.83E-03	5.72E-04	9.77E-05	No Data	3.17E-04	3.23E-03	1.05E-04
Pr-143	4.99E-06	1.50E-06	2.47E-07	No Data	8.11E-07	1.17E-04	2.63E-05
Pr-144	1.61E-11	4.99E-12	8.10E-13	No Data	2.64E-12	4.23E-07	5.32E-08
Nd-147	2.92E-06	2.36E-06	1.84E-07	No Data	1.30E-06	8.87E-05	2.22E-05
W-187	4.41E-09	2.61E-09	1.17E-09	No Data	No Data	1.11E-05	2.46E-05
Np-239	1.26E-07	9.04E-09	6.35E-09	No Data	2.63E-08	1.57E-05	1.73E-05

Table 9-9. Inhalation Dose Factors for the Teenager Age Group

Nuclide	Bone	Liver	T.Body	Thyroid	Kidney	Lung	GI-LLI
H-3	No Data	1.59E-07	1.59E-07	1.59E-07	1.59E-07	1.59E-07	1.59E-07
C-14	3.25E-06	6.09E-07	6.09E-07	6.09E-07	6.09E-07	6.09E-07	6.09E-07
Na-24	1.72E-06	1.72E-06	1.72E-06	1.72E-06	1.72E-06	1.72E-06	1.72E-06
P-32	2.36E-04	1.37E-08	8.95E-06	No Data	No Data	No Data	1.16E-05
Cr-51	No Data	No Data	1.69E-08	9.37E-09	3.84E-09	2.62E-06	3.75E-07
Mn-54	No Data	6.39E-06	1.05E-06	No Data	1.59E-06	2.48E-04	8.35E-06
Mn-56	No Data	2.12E-10	3.15E-11	No Data	2.24E-10	1.90E-06	7.18E-06
Fe-55	4.18E-06	2.98E-06	6.93E-07	No Data	No Data	1.55E-05	7.99E-07
Fe-59	1.99E-06	4.62E-06	1.79E-06	No Data	No Data	1.91E-04	2.23E-05
Co-58	No Data	2.59E-07	3.47E-07	No Data	No Data	1.68E-04	1.19E-05
Co-60	No Data	1.89E-06	2.48E-06	No Data	No Data	1.09E-03	3.24E-05
Ni-63	7.25E-05	5.43E-06	2.47E-06	No Data	No Data	3.84E-05	1.77E-06
Ni-65	2.73E-10	3.66E-11	1.59E-11	No Data	No Data	1.17E-06	4.59E-06
Cu-64	No Data	2.54E-10	1.06E-10	No Data	8.01E-10	1.39E-06	7.68E-06
Zn-65	4.82E-06	1.67E-05	7.80E-06	No Data	1.08E-05	1.55E-04	5.83E-06
Zn-69	6.04E-12	1.15E-11	8.07E-13	No Data	7.53E-12	1.98E-07	3.56E-08
Br-83	No Data	No Data	4.30E-08	No Data	No Data	No Data	No Data
Br-84	No Data	No Data	5.41E-08	No Data	No Data	No Data	No Data
Br-85	No Data	No Data	2.29E-09	No Data	No Data	No Data	No Data
Rb-86	No Data	2.38E-05	1.05E-05	No Data	No Data	No Data	2.21E-06
Rb-88	No Data	6.82E-08	3.40E-08	No Data	No Data	No Data	3.65E-15
Rb-89	No Data	4.40E-08	2.91E-08	No Data	No Data	No Data	4.22E-17
Sr-89	5.43E-05	No Data	1.56E-06	No Data	No Data	3.02E-04	4.64E-05
Sr-90	1.35E-02	No Data	8.35E-04	No Data	No Data	2.06E-03	9.56E-05
Sr-91	1.10E-08	No Data	4.39E-10	No Data	No Data	7.59E-06	3.24E-05

All values are in (mrem/pCi inhaled). They are obtained from Reference 3 (Table E-8). Neither Reference 2 nor Reference 3 contains data for Rh–105, Sb–124, or Sb–125.

Table 9-9 (contd). Inhalation Dose Factors for the Teenager Age Group

Nuclide	Bone	Liver	T.Body	Thyroid	Kidney	Lung	GI-LLI
Sr-92	1.19E-09	No Data	5.08E-11	No Data	No Data	3.43E-06	1.49E-05
Y-90	3.73E-07	No Data	1.00E-08	No Data	No Data	3.66E-05	6.99E-05
Y-91m	4.63E-11	No Data	1.77E-12	No Data	No Data	4.00E-07	3.77E-09
Y-91	8.26E-05	No Data	2.21E-06	No Data	No Data	3.67E-04	5.11E-05
Y-92	1.84E-09	No Data	5.36E-11	No Data	No Data	3.35E-06	2.06E-05
Y-93	1.69E-08	No Data	4.65E-10	No Data	No Data	1.04E-05	7.24E-05
Zr-95	1.82E-05	5.73E-06	3.94E-06	No Data	8.42E-06	3.36E-04	1.86E-05
Zr-97	1.72E-08	3.40E-09	1.57E-09	No Data	5.15E-09	1.62E-05	7.88E-05
Nb-95	2.32E-06	1.29E-06	7.08E-07	No Data	1.25E-06	9.39E-05	1.21E-05
Mo-99	No Data	2.11E-08	4.03E-09	No Data	5.14E-08	1.92E-05	3.36E-05
Tc-99m	1.73E-13	4.83E-13	6.24E-12	No Data	7.20E-12	1.44E-07	7.66E-07
Tc-101	7.40E-15	1.05E-14	1.03E-13	No Data	1.90E-13	8.34E-08	1.09E-16
Ru-103	2.63E-07	No Data	1.12E-07	No Data	9.29E-07	9.79E-05	1.36E-05
Ru-105	1.40E-10	No Data	5.42E-11	No Data	1.76E-10	2.27E-06	1.13E-05
Ru-106	1.23E-05	No Data	1.55E-06	No Data	2.38E-05	2.01E-03	1.20E-04
Rh-105	No Data	No Data	No Data	No Data	No Data	No Data	No Data
Ag-110m	1.73E-06	1.64E-06	9.99E-07	No Data	3.13E-06	8.44E-04	3.41E-05
Sb-124	No Data	No Data	No Data	No Data	No Data	No Data	No Data
Sb-125	No Data	No Data	No Data	No Data	No Data	No Data	No Data
Te-125m	6.10E-07	2.80E-07	8.34E-08	1.75E-07	No Data	6.70E-05	9.38E-06
Te-127m	2.25E-06	1.02E-06	2.73E-07	5.48E-07	8.17E-06	2.07E-04	1.99E-05
Te-127	2.51E-10	1.14E-10	5.52E-11	1.77E-10	9.10E-10	1.40E-06	1.01E-05
Te-129m	1.74E-06	8.23E-07	2.81E-07	5.72E-07	6.49E-06	2.47E-04	5.06E-05
Te-129	8.87E-12	4.22E-12	2.20E-12	6.48E-12	3.32E-11	4.12E-07	2.02E-07
Te-131m	1.23E-08	7.51E-09	5.03E-09	9.06E-09	5.49E-08	2.97E-05	7.76E-05
Te-131	1.97E-12	1.04E-12	6.30E-13	1.55E-12	7.72E-12	2.92E-07	1.89E-09

Table 9-9 (contd). Inhalation Dose Factors for the Teenager Age Group

Nuclide	Bone	Liver	T.Body	Thyroid	Kidney	Lung	GI-LLI
Te-132	4.50E-08	3.63E-08	2.74E-08	3.07E-08	2.44E-07	5.61E-05	5.79E-05
I-130	7.80E-07	2.24E-06	8.96E-07	1.86E-04	3.44E-06	No Data	1.14E-06
I-131	4.43E-06	6.14E-06	3.30E-06	1.83E-03	1.05E-05	No Data	8.11E-07
I-132	1.99E-07	5.47E-07	1.97E-07	1.89E-05	8.65E-07	No Data	1.59E-07
I-133	1.52E-06	2.56E-06	7.78E-07	3.65E-04	4.49E-06	No Data	1.29E-06
I-134	1.11E-07	2.90E-07	1.05E-07	4.94E-06	4.58E-07	No Data	2.55E-09
I-135	4.62E-07	1.18E-06	4.36E-07	7.76E-05	1.86E-06	No Data	8.69E-07
Cs-134	6.28E-05	1.41E-04	6.86E-05	No Data	4.69E-05	1.83E-05	1.22E-06
Cs-136	6.44E-06	2.42E-05	1.71E-05	No Data	1.38E-05	2.22E-06	1.36E-06
Cs-137	8.38E-05	1.06E-04	3.89E-05	No Data	3.80E-05	1.51E-05	1.06E-06
Cs-138	5.82E-08	1.07E-07	5.58E-08	No Data	8.28E-08	9.84E-09	3.38E-11
Ba-139	1.67E-10	1.18E-13	4.87E-12	No Data	1.11E-13	8.08E-07	8.06E-07
Ba-140	6.84E-06	8.38E-09	4.40E-07	No Data	2.85E-09	2.54E-04	2.86E-05
Ba-141	1.78E-11	1.32E-14	5.93E-13	No Data	1.23E-14	4.11E-07	9.33E-14
Ba-142	4.62E-12	4.63E-15	2.84E-13	No Data	3.92E-15	2.39E-07	5.99E-20
La-140	5.99E-08	2.95E-08	7.82E-09	No Data	No Data	2.68E-05	6.09E-05
La-142	1.20E-10	5.31E-11	1.32E-11	No Data	No Data	1.27E-06	1.50E-06
Ce-141	3.55E-06	2.37E-06	2.71E-07	No Data	1.11E-06	7.67E-05	1.58E-05
Ce-143	3.32E-08	2.42E-08	2.70E-09	No Data	1.08E-08	1.63E-05	3.19E-05
Ce-144	6.11E-04	2.53E-04	3.28E-05	No Data	1.51E-04	1.67E-03	1.08E-04
Pr-143	1.67E-06	6.64E-07	8.28E-08	No Data	3.86E-07	6.04E-05	2.67E-05
Pr-144	5.37E-12	2.20E-12	2.72E-13	No Data	1.26E-12	2.19E-07	2.94E-14
Nd-147	9.83E-07	1.07E-06	6.41E-08	No Data	6.28E-07	4.65E-05	2.28E-05
W-187	1.50E-09	1.22E-09	4.29E-10	No Data	No Data	5.92E-06	2.21E-05
Np-239	4.23E-08	3.99E-09	2.21E-09	No Data	1.25E-08	8.11E-06	1.65E-05

Table 9-10. Inhalation Dose Factors for the Adult Age Group

Nuclide	Bone	Liver	T. Body	Thyroid	Kidney	Lung	GI-LLI
H-3	No Data	1.58E-07	1.58E-07	1.58E-07	1.58E-07	1.58E-07	1.58E-07
C-14	2.27E-06	4.26E-07	4.26E-07	4.26E-07	4.26E-07	4.26E-07	4.26E-07
Na-24	1.28E-06	1.28E-06	1.28E-06	1.28E-06	1.28E-06	1.28E-06	1.28E-06
P-32	1.65E-04	9.64E-06	6.26E-06	No Data	No Data	No Data	1.08E-05
Cr-51	No Data	No Data	1.25E-08	7.44E-09	2.85E-09	1.80E-06	4.15E-07
Mn-54	No Data	4.95E-06	7.87E-07	No Data	1.23E-06	1.75E-04	9.67E-06
Mn-56	No Data	1.55E-10	2.29E-11	No Data	1.63E-10	1.18E-06	2.53E-06
Fe-55	3.07E-06	2.12E-06	4.93E-07	No Data	No Data	9.01E-06	7.54E-07
Fe-59	1.47E-06	3.47E-06	1.32E-06	No Data	No Data	1.27E-04	2.35E-05
Co-58	No Data	1.98E-07	2.59E-07	No Data	No Data	1.16E-04	1.33E-05
Co-60	No Data	1.44E-06	1.85E-06	No Data	No Data	7.46E-04	3.56E-05
Ni-63	5.40E-05	3.93E-06	1.81E-06	No Data	No Data	2.23E-05	1.67E-06
Ni-65	1.92E-10	2.62E-11	1.14E-11	No Data	No Data	7.00E-07	1.54E-06
Cu-64	No Data	1.83E-10	7.69E-11	No Data	5.78E-10	8.48E-07	6.12E-06
Zn-65	4.05E-06	1.29E-05	5.82E-06	No Data	8.62E-06	1.08E-04	6.68E-06
Zn-69	4.23E-12	8.14E-12	5.65E-13	No Data	5.27E-12	1.15E-07	2.04E-09
Br-83	No Data	No Data	3.01E-08	No Data	No Data	No Data	2.90E-08
Br-84	No Data	No Data	3.91E-08	No Data	No Data	No Data	2.05E-13
Br-85	No Data	No Data	1.60E-09	No Data	No Data	No Data	No Data
Rb-86	No Data	1.69E-05	7.37E-06	No Data	No Data	No Data	2.08E-06
Rb-88	No Data	4.84E-08	2.41E-08	No Data	No Data	No Data	4.18E-19
Rb-89	No Data	3.20E-08	2.12E-08	No Data	No Data	No Data	1.16E-21
Sr-89	3.80E-05	No Data	1.09E-06	No Data	No Data	1.75E-04	4.37E-05
Sr-90	1.24E-02	No Data	7.62E-04	No Data	No Data	1.20E-03	9.02E-05
Sr-91	7.74E-09	No Data	3.13E-10	No Data	No Data	4.56E-06	2.39E-05

All values are in (mrem/pCi inhaled). They are obtained from Reference 3 (Table E-7), except as follows: Reference 2 (Table C–1) for Rh–105, Sb-124, and Sb-125.

Table 9-10 (contd). Inhalation Dose Factors for the Adult Age Group

Nuclide	Bone	Liver	T.Body	Thyroid	Kidney	Lung	GI-LLI
Sr-92	8.43E-10	No Data	3.64E-11	No Data	No Data	2.06E-06	5.38E-06
Y-90	2.61E-07	No Data	7.01E-09	No Data	No Data	2.12E-05	6.32E-05
Y-91m	3.26E-11	No Data	1.27E-12	No Data	No Data	2.40E-07	1.66E-10
Y-91	5.78E-05	No Data	1.55E-06	No Data	No Data	2.13E-04	4.81E-05
Y-92	1.29E-09	No Data	3.77E-11	No Data	No Data	1.96E-06	9.19E-06
Y-93	1.18E-08	No Data	3.26E-10	No Data	No Data	6.06E-06	5.27E-05
Zr-95	1.34E-05	4.30E-06	2.91E-06	No Data	6.77E-06	2.21E-04	1.88E-05
Zr-97	1.21E-08	2.45E-09	1.13E-09	No Data	3.71E-09	9.84E-06	6.54E-05
Nb-95	1.76E-06	9.77E-07	5.26E-07	No Data	9.67E-07	6.31E-05	1.30E-05
Mo-99	No Data	1.51E-08	2.87E-09	No Data	3.64E-08	1.14E-05	3.10E-05
Tc-99m	1.29E-13	3.64E-13	4.63E-12	No Data	5.52E-12	9.55E-08	5.20E-07
Tc-101	5.22E-15	7.52E-15	7.38E-14	No Data	1.35E-13	4.99E-08	1.36E-21
Ru-103	1.91E-07	No Data	8.23E-08	No Data	7.29E-07	6.31E-05	1.38E-05
Ru-105	9.88E-11	No Data	3.89E-11	No Data	1.27E-10	1.37E-06	6.02E-06
Ru-106	8.64E-06	No Data	1.09E-06	No Data	1.67E-05	1.17E-03	1.14E-04
Rh-105	9.24E-10	6.73E-10	4.43E-10	No Data	2.86E-09	2.41E-06	1.09E-05
Ag-110m	1.35E-06	1.25E-06	7.43E-07	No Data	2.46E-06	5.79E-04	3.78E-05
Sb-124	3.90E-06	7.36E-08	1.55E-06	9.44E-09	No Data	3.10E-04	5.08E-05
Sb-125	8.26E-06	8.91E-08	1.66E-06	7.34E-09	No Data	2.75E-04	1.26E-05
Te-125m	4.27E-07	1.98E-07	5.84E-08	1.31E-07	1.55E-06	3.92E-05	8.83E-06
Te-127m	1.58E-06	7.21E-07	1.96E-07	4.11E-07	5.72E-06	1.20E-04	1.87E-05
Te-127	1.75E-10	8.03E-11	3.87E-11	1.32E-10	6.37E-10	8.14E-07	7.17E-06
Te-129m	1.22E-06	5.84E-07	1.98E-07	4.30E-07	4.57E-06	1.45E-04	4.79E-05
Te-129	6.22E-12	2.99E-12	1.55E-12	4.87E-12	2.34E-11	2.42E-07	1.96E-08
Te-131m	8.74E-09	5.45E-09	3.63E-09	6.88E-09	3.86E-08	1.82E-05	6.95E-05
Te-131	1.39E-12	7.44E-13	4.49E-13	1.17E-12	5.46E-12	1.74E-07	2.30E-09

Table 9-10 (contd). Inhalation Dose Factors for the Adult Age Group

Nuclide	Bone	Liver	T.Body	Thyroid	Kidney	Lung	GI-LLI
Te-132	3.25E-08	2.69E-08	2.02E-08	2.37E-08	1.82E-07	3.60E-05	6.37E-05
I-130	5.72E-07	1.68E-06	6.60E-07	1.42E-04	2.61E-06	No Data	9.61E-07
I-131	3.15E-06	4.47E-06	2.56E-06	1.49E-03	7.66E-06	No Data	7.85E-07
I-132	1.45E-07	4.07E-07	1.45E-07	1.43E-05	6.48E-07	No Data	5.08E-08
I-133	1.08E-06	1.85E-06	5.65E-07	2.69E-04	3.23E-06	No Data	1.11E-06
I-134	8.05E-08	2.16E-07	7.69E-08	3.73E-06	3.44E-07	No Data	1.26E-10
I-135	3.35E-07	8.73E-07	3.21E-07	5.60E-05	1.39E-06	No Data	6.56E-07
Cs-134	4.66E-05	1.06E-04	9.10E-05	No Data	3.59E-05	1.22E-05	1.30E-06
Cs-136	4.88E-06	1.83E-05	1.38E-05	No Data	1.07E-05	1.50E-06	1.46E-06
Cs-137	5.98E-05	7.76E-05	5.35E-05	No Data	2.78E-05	9.40E-06	1.05E-06
Cs-138	4.14E-08	7.76E-08	4.05E-08	No Data	6.00E-08	6.07E-09	2.33E-13
Ba-139	1.17E-10	8.32E-14	3.42E-12	No Data	7.78E-14	4.70E-07	1.12E-07
Ba-140	4.88E-06	6.13E-09	3.21E-07	No Data	2.09E-09	1.59E-04	2.73E-05
Ba-141	1.25E-11	9.41E-15	4.20E-13	No Data	8.75E-15	2.42E-07	1.45E-17
Ba-142	3.29E-12	3.38E-15	2.07E-13	No Data	2.86E-15	1.49E-07	1.96E-26
La-140	4.30E-08	2.17E-08	5.73E-09	No Data	No Data	1.70E-05	5.73E-05
La-142	8.54E-11	3.88E-11	9.65E-12	No Data	No Data	7.91E-07	2.64E-07
Ce-141	2.49E-06	1.69E-06	1.91E-07	No Data	7.83E-07	4.52E-05	1.50E-05
Ce-143	2.33E-08	1.72E-08	1.91E-09	No Data	7.60E-09	9.97E-06	2.83E-05
Ce-144	4.29E-04	1.79E-04	2.30E-05	No Data	1.06E-04	9.72E-04	1.02E-04
Pr-143	1.17E-06	4.69E-07	5.80E-08	No Data	2.70E-07	3.51E-05	2.50E-05
Pr-144	3.76E-12	1.56E-12	1.91E-13	No Data	8.81E-13	1.27E-07	2.69E-18
Nd-147	6.59E-07	7.62E-07	4.56E-08	No Data	4.45E-07	2.76E-05	2.16E-05
W-187	1.06E-09	8.85E-10	3.10E-10	No Data	No Data	3.63E-06	1.94E-05
Np-239	2.87E-08	2.82E-09	1.55E-09	No Data	8.75E-09	4.70E-06	1.49E-05

Table 9-11. Ingestion Dose Factors for the Infant Age Group

Nuclide	Bone	Liver	T.Body	Thyroid	Kidney	Lung	GI-LLI
H-3	No Data	3.08E-07	3.08E-07	3.08E-07	3.08E-07	3.08E-07	3.08E-07
C-14	2.37E-05	5.06E-06	5.06E-06	5.06E-06	5.06E-06	5.06E-06	5.06E-06
Na-24	1.01E-05	1.01E-05	1.01E-05	1.01E-05	1.01E-05	1.01E-05	1.01E-05
P-32	1.70E-03	1.00E-04	6.59E-05	No Data	No Data	No Data	2.30E-05
Cr-51	No Data	No Data	1.41E-08	9.20E-09	2.01E-09	1.79E-08	4.11E-07
Mn-54	No Data	1.99E-05	4.51E-06	No Data	4.41E-06	No Data	7.31E-06
Mn-56	No Data	8.18E-07	1.41E-07	No Data	7.03E-07	No Data	7.43E-05
Fe-55	1.39E-05	8.98E-06	2.40E-06	No Data	No Data	4.39E-06	1.14E-06
Fe-59	3.08E-05	5.38E-05	2.12E-05	No Data	No Data	1.59E-05	2.57E-05
Co-58	No Data	3.60E-06	8.98E-06	No Data	No Data	No Data	8.97E-06
Co-60	No Data	1.08E-05	2.55E-05	No Data	No Data	No Data	2.57E-05
Ni-63	6.34E-04	3.92E-05	2.20E-05	No Data	No Data	No Data	1.95E-06
Ni-65	4.70E-06	5.32E-07	2.42E-07	No Data	No Data	No Data	4.05E-05
Cu-64	No Data	6.09E-07	2.82E-07	No Data	1.03E-06	No Data	1.25E-05
Zn-65	1.84E-05	6.31E-05	2.91E-05	No Data	3.06E-05	No Data	5.33E-05
Zn-69	9.33E-08	1.68E-07	1.25E-08	No Data	6.98E-08	No Data	1.37E-05
Br-83	No Data	No Data	3.63E-07	No Data	No Data	No Data	No Data
Br-84	No Data	No Data	3.82E-07	No Data	No Data	No Data	No Data
Br-85	No Data	No Data	1.94E-08	No Data	No Data	No Data	No Data
Rb-86	No Data	1.70E-04	8.40E-05	No Data	No Data	No Data	4.35E-06
Rb-88	No Data	4.98E-07	2.73E-07	No Data	No Data	No Data	4.85E-07
Rb-89	No Data	2.86E-07	1.97E-07	No Data	No Data	No Data	9.74E-08
Sr-89	2.51E-03	No Data	7.20E-05	No Data	No Data	No Data	5.16E-05
Sr-90	1.85E-02	No Data	4.71E-03	No Data	No Data	No Data	2.31E-04
Sr-91	5.00E-05	No Data	1.81E-06	No Data	No Data	No Data	5.92E-05

All values are in (mrem/pCi ingested). They are obtained from Reference 3 (Table E-14). Neither Reference 2 nor Reference 3 contains data for Rh–105, Sb–124, or Sb–125.

Table 9-11 (contd). Ingestion Dose Factors for the Infant Age Group

Nuclide	Bone	Liver	T.Body	Thyroid	Kidney	Lung	GI-LLI
Sr-92	1.92E-05	No Data	7.13E-07	No Data	No Data	No Data	2.07E-04
Y-90	8.69E-08	No Data	2.33E-09	No Data	No Data	No Data	1.20E-04
Y-91m	8.10E-10	No Data	2.76E-11	No Data	No Data	No Data	2.70E-06
Y-91	1.13E-06	No Data	3.01E-08	No Data	No Data	No Data	8.10E-05
Y-92	7.65E-09	No Data	2.15E-10	No Data	No Data	No Data	1.46E-04
Y-93	2.43E-08	No Data	6.62E-10	No Data	No Data	No Data	1.92E-04
Zr-95	2.06E-07	5.02E-08	3.56E-08	No Data	5.41E-08	No Data	2.50E-05
Zr-97	1.48E-08	2.54E-09	1.16E-09	No Data	2.56E-09	No Data	1.62E-04
Nb-95	4.20E-08	1.73E-08	1.00E-08	No Data	1.24E-08	No Data	1.46E-05
Mo-99	No Data	3.40E-05	6.63E-06	No Data	5.08E-05	No Data	1.12E-05
Tc-99m	1.92E-09	3.96E-09	5.10E-08	No Data	4.26E-08	2.07E-09	1.15E-06
Tc-101	2.27E-09	2.86E-09	2.83E-08	No Data	3.40E-08	1.56E-09	4.86E-07
Ru-103	1.48E-06	No Data	4.95E-07	No Data	3.08E-06	No Data	1.80E-05
Ru-105	1.36E-07	No Data	4.58E-08	No Data	1.00E-06	No Data	5.41E-05
Ru-106	2.41E-05	No Data	3.01E-06	No Data	2.85E-05	No Data	1.83E-04
Rh-105	No Data	No Data	No Data	No Data	No Data	No Data	No Data
Ag-110m	9.96E-07	7.27E-07	4.81E-07	No Data	1.04E-06	No Data	3.77E-05
Sb-124	No Data	No Data	No Data	No Data	No Data	No Data	No Data
Sb-125	No Data	No Data	No Data	No Data	No Data	No Data	No Data
Te-125m	2.33E-05	7.79E-06	3.15E-06	7.84E-06	No Data	No Data	1.11E-05
Te-127m	5.85E-05	1.94E-05	7.08E-06	1.69E-05	1.44E-04	No Data	2.36E-05
Te-127	1.00E-06	3.35E-07	2.15E-07	8.14E-07	2.44E-06	No Data	2.10E-05
Te-129m	1.00E-04	3.43E-05	1.54E-05	3.84E-05	2.50E-04	No Data	5.97E-05
Te-129	2.84E-07	9.79E-08	6.63E-08	2.38E-07	7.07E-07	No Data	2.27E-05
Te-131m	1.52E-05	6.12E-06	5.05E-06	1.24E-05	4.21E-05	No Data	1.03E-04
Te-131	1.76E-07	6.50E-08	4.94E-08	1.57E-07	4.50E-07	No Data	7.11E-06

Table 9-11 (contd). Ingestion Dose Factors for the Infant Age Group

Nuclide	Bone	Liver	T.Body	Thyroid	Kidney	Lung	GI-LLI
Te-132	2.08E-05	1.03E-05	9.61E-06	1.52E-05	6.44E-05	No Data	3.81E-05
I-130	6.00E-06	1.32E-05	5.30E-06	1.48E-03	1.45E-05	No Data	2.83E-06
I-131	3.59E-05	4.23E-05	1.86E-05	1.39E-02	4.94E-05	No Data	1.51E-06
I-132	1.66E-06	3.37E-06	1.20E-06	1.58E-04	3.76E-06	No Data	2.73E-06
I-133	1.25E-05	1.82E-05	5.33E-06	3.31E-03	2.14E-05	No Data	3.08E-06
I-134	8.69E-07	1.78E-06	6.33E-07	4.15E-05	1.99E-06	No Data	1.84E-06
I-135	3.64E-06	7.24E-06	2.64E-06	6.49E-04	8.07E-06	No Data	2.62E-06
Cs-134	3.77E-04	7.03E-04	7.10E-05	No Data	1.81E-04	7.42E-05	1.91E-06
Cs-136	4.59E-05	1.35E-04	5.04E-05	No Data	5.38E-05	1.10E-05	2.05E-06
Cs-137	5.22E-04	6.11E-04	4.33E-05	No Data	1.64E-04	6.64E-05	1.91E-06
Cs-138	4.81E-07	7.82E-07	3.79E-07	No Data	3.90E-07	6.09E-08	1.25E-06
Ba-139	8.81E-07	5.84E-10	2.55E-08	No Data	3.51E-10	3.54E-10	5.58E-05
Ba-140	1.71E-04	1.71E-07	8.81E-06	No Data	4.06E-08	1.05E-07	4.20E-05
Ba-141	4.25E-07	2.91E-10	1.34E-08	No Data	1.75E-10	1.77E-10	5.19E-06
Ba-142	1.84E-07	1.53E-10	9.06E-09	No Data	8.81E-11	9.26E-11	7.59E-07
La-140	2.11E-08	8.32E-09	2.14E-09	No Data	No Data	No Data	9.77E-05
La-142	1.10E-09	4.04E-10	9.67E-11	No Data	No Data	No Data	6.86E-05
Ce-141	7.87E-08	4.80E-08	5.65E-09	No Data	1.48E-08	No Data	2.48E-05
Ce-143	1.48E-08	9.82E-06	1.12E-09	No Data	2.86E-09	No Data	5.73E-05
Ce-144	2.98E-06	1.22E-06	1.67E-07	No Data	4.93E-07	No Data	1.71E-04
Pr-143	8.13E-08	3.04E-08	4.03E-09	No Data	1.13E-08	No Data	4.29E-05
Pr-144	2.74E-10	1.06E-10	1.38E-11	No Data	3.84E-11	No Data	4.93E-06
Nd-147	5.53E-08	5.68E-08	3.48E-09	No Data	2.19E-08	No Data	3.60E-05
W-187	9.03E-07	6.28E-07	2.17E-07	No Data	No Data	No Data	3.69E-05
Np-239	1.11E-08	9.93E-10	5.61E-10	No Data	1.98E-09	No Data	2.87E-05

Table 9-12. Ingestion Dose Factors for the Child Age Group

Nuclide	Bone	Liver	T. Body	Thyroid	Kidney	Lung	GI-LLI
H-3	No Data	2.03E-07	2.03E-07	2.03E-07	2.03E-07	2.03E-07	2.03E-07
C-14	1.21E-05	2.42E-06	2.42E-06	2.42E-06	2.42E-06	2.42E-06	2.42E-06
Na-24	5.80E-06	5.80E-06	5.80E-06	5.80E-06	5.80E-06	5.80E-06	5.80E-06
P-32	8.25E-04	3.86E-05	3.18E-05	No Data	No Data	No Data	2.28E-05
Cr-51	No Data	No Data	8.90E-09	4.94E-09	1.35E-09	9.02E-09	4.72E-07
Mn-54	No Data	1.07E-05	2.85E-06	No Data	3.00E-06	No Data	8.98E-06
Mn-56	No Data	3.34E-07	7.54E-08	No Data	4.04E-07	No Data	4.84E-05
Fe-55	1.15E-05	6.10E-06	1.89E-06	No Data	No Data	3.45E-06	1.13E-06
Fe-59	1.65E-05	2.67E-05	1.33E-05	No Data	No Data	7.74E-06	2.78E-05
Co-58	No Data	1.80E-06	5.51E-06	No Data	No Data	No Data	1.05E-05
Co-60	No Data	5.29E-06	1.56E-05	No Data	No Data	No Data	2.93E-05
Ni-63	5.38E-04	2.88E-05	1.83E-05	No Data	No Data	No Data	1.94E-06
Ni-65	2.22E-06	2.09E-07	1.22E-07	No Data	No Data	No Data	2.56E-05
Cu-64	No Data	2.45E-07	1.48E-07	No Data	5.92E-07	No Data	1.15E-05
Zn-65	1.37E-05	3.65E-05	2.27E-05	No Data	2.30E-05	No Data	6.41E-06
Zn-69	4.38E-08	6.33E-08	5.85E-09	No Data	3.84E-08	No Data	3.99E-06
Br-83	No Data	No Data	1.71E-07	No Data	No Data	No Data	No Data
Br-84	No Data	No Data	1.98E-07	No Data	No Data	No Data	No Data
Br-85	No Data	No Data	9.12E-09	No Data	No Data	No Data	No Data
Rb-86	No Data	6.70E-05	4.12E-05	No Data	No Data	No Data	4.31E-06
Rb-88	No Data	1.90E-07	1.32E-07	No Data	No Data	No Data	9.32E-09
Rb-89	No Data	1.17E-07	1.04E-07	No Data	No Data	No Data	1.02E-09
Sr-89	1.32E-03	No Data	3.77E-05	No Data	No Data	No Data	5.11E-05
Sr-90	1.70E-02	No Data	4.31E-03	No Data	No Data	No Data	2.29E-04
Sr-91	2.40E-05	No Data	9.06E-07	No Data	No Data	No Data	5.30E-05

All values are in (mrem/pCi ingested). They are obtained from Reference 3 (Table E-13). Neither Reference 2 nor Reference 3 contains data for Rh–105, Sb–124, or Sb–125.

Table 9-12 (contd). Ingestion Dose Factors for the Child Age Group

Nuclide	Bone	Liver	T.Body	Thyroid	Kidney	Lung	GI-LLI
Sr-92	9.03E-06	No Data	3.62E-07	No Data	No Data	No Data	1.71E-04
Y-90	4.11E-08	No Data	1.10E-09	No Data	No Data	No Data	1.17E-04
Y-91m	3.82E-10	No Data	1.39E-11	No Data	No Data	No Data	7.48E-07
Y-91	6.02E-07	No Data	1.61E-08	No Data	No Data	No Data	8.02E-05
Y-92	3.60E-09	No Data	1.03E-10	No Data	No Data	No Data	1.04E-04
Y-93	1.14E-08	No Data	3.13E-10	No Data	No Data	No Data	1.70E-04
Zr-95	1.16E-07	2.55E-08	2.27E-08	No Data	3.65E-08	No Data	2.66E-05
Zr-97	6.99E-09	1.01E-09	5.96E-10	No Data	1.45E-09	No Data	1.53E-04
Nb-95	2.25E-08	8.76E-09	6.26E-09	No Data	8.23E-09	No Data	1.62E-05
Mo-99	No Data	1.33E-05	3.29E-06	No Data	2.84E-05	No Data	1.10E-05
Tc-99m	9.23E-10	1.81E-09	3.00E-08	No Data	2.63E-08	9.19E-10	1.03E-06
Tc-101	1.07E-09	1.12E-09	1.42E-08	No Data	1.91E-08	5.92E-10	3.56E-09
Ru-103	7.31E-07	No Data	2.81E-07	No Data	1.84E-06	No Data	1.89E-05
Ru-105	6.45E-08	No Data	2.34E-08	No Data	5.67E-07	No Data	4.21E-05
Ru-106	1.17E-05	No Data	1.46E-06	No Data	1.58E-05	No Data	1.82E-04
Rh-105	No Data	No Data	No Data	No Data	No Data	No Data	No Data
Ag-110m	5.39E-07	3.64E-07	2.91E-07	No Data	6.78E-07	No Data	4.33E-05
Sb-124	No Data	No Data	No Data	No Data	No Data	No Data	No Data
Sb-125	No Data	No Data	No Data	No Data	No Data	No Data	No Data
Te-125m	1.14E-05	3.09E-06	1.52E-06	3.20E-06	No Data	No Data	1.10E-05
Te-127m	2.89E-05	7.78E-06	3.43E-06	6.91E-06	8.24E-05	No Data	2.34E-05
Te-127	4.71E-07	1.27E-07	1.01E-07	3.26E-07	1.34E-06	No Data	1.84E-05
Te-129m	4.87E-05	1.36E-05	7.56E-06	1.57E-05	1.43E-04	No Data	5.94E-05
Te-129	1.34E-07	3.74E-08	3.18E-08	9.56E-08	3.92E-07	No Data	8.34E-06
Te-131m	7.20E-06	2.49E-06	2.65E-06	5.12E-06	2.41E-05	No Data	1.01E-04
Te-131	8.30E-08	2.53E-08	2.47E-08	6.35E-08	2.51E-07	No Data	4.36E-07

Table 9-12 (contd). Ingestion Dose Factors for the Child Age Group

Nuclide	Bone	Liver	T.Body	Thyroid	Kidney	Lung	GI-LLI
Te-132	1.01E-05	4.47E-06	5.40E-06	6.51E-06	4.15E-05	No Data	4.50E-05
I-130	2.92E-06	5.90E-06	3.04E-06	6.50E-04	8.82E-06	No Data	2.76E-06
I-131	1.72E-05	1.73E-05	9.83E-06	5.72E-03	2.84E-05	No Data	1.54E-06
I-132	8.00E-07	1.47E-06	6.76E-07	6.82E-05	2.25E-06	No Data	1.73E-06
I-133	5.92E-06	7.32E-06	2.77E-06	1.36E-03	1.22E-05	No Data	2.95E-06
I-134	4.19E-07	7.78E-07	3.58E-07	1.79E-05	1.19E-06	No Data	5.16E-07
I-135	1.75E-06	3.15E-06	1.49E-06	2.79E-04	4.83E-06	No Data	2.40E-06
Cs-134	2.34E-04	3.84E-04	8.10E-05	No Data	1.19E-04	4.27E-05	2.07E-06
Cs-136	2.35E-05	6.46E-05	4.18E-05	No Data	3.44E-05	5.13E-06	2.27E-06
Cs-137	3.27E-04	3.13E-04	4.62E-05	No Data	1.02E-04	3.67E-05	1.96E-06
Cs-138	2.28E-07	3.17E-07	2.01E-07	No Data	2.23E-07	2.40E-08	1.46E-07
Ba-139	4.14E-07	2.21E-10	1.20E-08	No Data	1.93E-10	1.30E-10	2.39E-05
Ba-140	8.31E-05	7.28E-08	4.85E-06	No Data	2.37E-08	4.34E-08	4.21E-05
Ba-141	2.00E-07	1.12E-10	6.51E-09	No Data	9.69E-11	6.58E-10	1.14E-07
Ba-142	8.74E-08	6.29E-11	4.88E-09	No Data	5.09E-11	3.70E-11	1.14E-09
La-140	1.01E-08	3.53E-09	1.19E-09	No Data	No Data	No Data	9.84E-05
La-142	5.24E-10	1.67E-10	5.23E-11	No Data	No Data	No Data	3.31E-05
Ce-141	3.97E-08	1.98E-08	2.94E-09	No Data	8.68E-09	No Data	2.47E-05
Ce-143	6.99E-09	3.79E-06	5.49E-10	No Data	1.59E-09	No Data	5.55E-05
Ce-144	2.08E-06	6.52E-07	1.11E-07	No Data	3.61E-07	No Data	1.70E-04
Pr-143	3.93E-08	1.18E-08	1.95E-09	No Data	6.39E-09	No Data	4.24E-05
Pr-144	1.29E-10	3.99E-11	6.49E-12	No Data	2.11E-11	No Data	8.59E-08
Nd-147	2.79E-08	2.26E-08	1.75E-09	No Data	1.24E-08	No Data	3.58E-05
W-187	4.29E-07	2.54E-07	1.14E-07	No Data	No Data	No Data	3.57E-05
Np-239	5.25E-09	3.77E-10	2.65E-10	No Data	1.09E-09	No Data	2.79E-05

Table 9-13. Ingestion Dose Factors for the Teenager Age Group

Nuclide	Bone	Liver	T. Body	Thyroid	Kidney	Lung	GI-LLI
H-3	No Data	1.06E-07	1.06E-07	1.06E-07	1.06E-07	1.06E-07	1.06E-07
C-14	4.06E-06	8.12E-07	8.12E-07	8.12E-07	8.12E-07	8.12E-07	8.12E-07
Na-24	2.30E-06	2.30E-06	2.30E-06	2.30E-06	2.30E-06	2.30E-06	2.30E-06
P-32	2.76E-04	1.71E-05	1.07E-05	No Data	No Data	No Data	2.32E-05
Cr-51	No Data	No Data	3.60E-09	2.00E-09	7.89E-10	5.14E-09	6.05E-07
Mn-54	No Data	5.90E-06	1.17E-06	No Data	1.76E-06	No Data	1.21E-05
Mn-56	No Data	1.58E-07	2.81E-08	No Data	2.00E-07	No Data	1.04E-05
Fe-55	3.78E-06	2.68E-06	6.25E-07	No Data	No Data	1.70E-06	1.16E-06
Fe-59	5.87E-06	1.37E-05	5.29E-06	No Data	No Data	4.32E-06	3.24E-05
Co-58	No Data	9.72E-07	2.24E-06	No Data	No Data	No Data	1.34E-05
Co-60	No Data	2.81E-06	6.33E-06	No Data	No Data	No Data	3.66E-05
Ni-63	1.77E-04	1.25E-05	6.00E-06	No Data	No Data	No Data	1.99E-06
Ni-65	7.49E-07	9.57E-08	4.36E-08	No Data	No Data	No Data	5.19E-06
Cu-64	No Data	1.15E-07	5.41E-08	No Data	2.91E-07	No Data	8.92E-06
Zn-65	5.76E-06	2.00E-05	9.33E-06	No Data	1.28E-05	No Data	8.47E-06
Zn-69	1.47E-08	2.80E-08	1.96E-09	No Data	1.83E-08	No Data	5.16E-08
Br-83	No Data	No Data	5.74E-08	No Data	No Data	No Data	No Data
Br-84	No Data	No Data	7.22E-08	No Data	No Data	No Data	No Data
Br-85	No Data	No Data	3.05E-09	No Data	No Data	No Data	No Data
Rb-86	No Data	2.98E-05	1.40E-05	No Data	No Data	No Data	4.41E-06
Rb-88	No Data	8.52E-08	4.54E-08	No Data	No Data	No Data	7.30E-15
Rb-89	No Data	5.50E-08	3.89E-08	No Data	No Data	No Data	8.43E-17
Sr-89	4.40E-04	No Data	1.26E-05	No Data	No Data	No Data	5.24E-05
Sr-90	8.30E-03	No Data	2.05E-03	No Data	No Data	No Data	2.33E-04
Sr-91	8.07E-06	No Data	3.21E-07	No Data	No Data	No Data	3.66E-05

All values are in (mrem/pCi ingested). They are obtained from Reference 3 (Table E-12). Neither Reference 2 nor Reference 3 contains data for Rh–105, Sb–124, or Sb–125.

Table 9-13 (contd). Ingestion Dose Factors for the Teenager Age Group

Nuclide	Bone	Liver	T.Body	Thyroid	Kidney	Lung	GI-LLI
Sr-92	3.05E-06	No Data	1.30E-07	No Data	No Data	No Data	7.77E-05
Y-90	1.37E-08	No Data	3.69E-10	No Data	No Data	No Data	1.13E-04
Y-91m	1.29E-10	No Data	4.93E-12	No Data	No Data	No Data	6.09E-09
Y-91	2.01E-07	No Data	5.39E-09	No Data	No Data	No Data	8.24E-05
Y-92	1.21E-09	No Data	3.50E-11	No Data	No Data	No Data	3.32E-05
Y-93	3.83E-09	No Data	1.05E-10	No Data	No Data	No Data	1.17E-04
Zr-95	4.12E-08	1.30E-08	8.94E-09	No Data	1.91E-08	No Data	3.00E-05
Zr-97	2.37E-09	4.69E-10	2.16E-10	No Data	7.11E-10	No Data	1.27E-04
Nb-95	8.22E-09	4.56E-09	2.51E-09	No Data	4.42E-09	No Data	1.95E-05
Mo-99	No Data	6.03E-06	1.15E-06	No Data	1.38E-05	No Data	1.08E-05
Tc-99m	3.32E-10	9.26E-10	1.20E-08	No Data	1.38E-08	5.14E-10	6.08E-07
Tc-101	3.60E-10	5.12E-10	5.03E-09	No Data	9.26E-09	3.12E-10	8.75E-17
Ru-103	2.55E-07	No Data	1.09E-07	No Data	8.99E-07	No Data	2.13E-05
Ru-105	2.18E-08	No Data	8.46E-09	No Data	2.75E-07	No Data	1.76E-05
Ru-106	3.92E-06	No Data	4.94E-07	No Data	7.56E-06	No Data	1.88E-04
Rh-105	No Data	No Data	No Data	No Data	No Data	No Data	No Data
Ag-110m	2.05E-07	1.94E-07	1.18E-07	No Data	3.70E-07	No Data	5.45E-05
Sb-124	No Data	No Data	No Data	No Data	No Data	No Data	No Data
Sb-125	No Data	No Data	No Data	No Data	No Data	No Data	No Data
Te-125m	3.83E-06	1.38E-06	5.12E-07	1.07E-06	No Data	No Data	1.13E-05
Te-127m	9.67E-06	3.43E-06	1.15E-06	2.30E-06	3.92E-05	No Data	2.41E-05
Te-127	1.58E-07	5.60E-08	3.40E-08	1.09E-07	6.40E-07	No Data	1.22E-05
Te-129m	1.63E-05	6.05E-06	2.58E-06	5.26E-06	6.82E-05	No Data	6.12E-05
Te-129	4.48E-08	1.67E-08	1.09E-08	3.20E-08	1.88E-07	No Data	2.45E-07
Te-131m	2.44E-06	1.17E-06	9.76E-07	1.76E-06	1.22E-05	No Data	9.39E-05
Te-131	2.79E-08	1.15E-08	8.72E-09	2.15E-08	1.22E-07	No Data	2.29E-09

Table 9-13 (contd). Ingestion Dose Factors for the Teenager Age Group

Nuclide	Bone	Liver	T.Body	Thyroid	Kidney	Lung	GI-LLI
Te-132	3.49E-06	2.21E-06	2.08E-06	2.33E-06	2.12E-05	No Data	7.00E-05
I-130	1.03E-06	2.98E-06	1.19E-06	2.43E-04	4.59E-06	No Data	2.29E-06
I-131	5.85E-06	8.19E-06	4.40E-06	2.39E-03	1.41E-05	No Data	1.62E-06
I-132	2.79E-07	7.30E-07	2.62E-07	2.46E-05	1.15E-06	No Data	3.18E-07
I-133	2.01E-06	3.41E-06	1.04E-06	4.76E-04	5.98E-06	No Data	2.58E-06
I-134	1.46E-07	3.87E-07	1.39E-07	6.45E-06	6.10E-07	No Data	5.10E-09
I-135	6.10E-07	1.57E-06	5.82E-07	1.01E-04	2.48E-06	No Data	1.74E-06
Cs-134	8.37E-05	1.97E-04	9.14E-05	No Data	6.26E-05	2.39E-05	2.45E-06
Cs-136	8.59E-06	3.38E-05	2.27E-05	No Data	1.84E-05	2.90E-06	2.72E-06
Cs-137	1.12E-04	1.49E-04	5.19E-05	No Data	5.07E-05	1.97E-05	2.12E-06
Cs-138	7.76E-08	1.49E-07	7.45E-08	No Data	1.10E-07	1.28E-08	6.76E-11
Ba-139	1.39E-07	9.78E-11	4.05E-09	No Data	9.22E-11	6.74E-11	1.24E-06
Ba-140	2.84E-05	3.48E-08	1.83E-06	No Data	1.18E-08	2.34E-08	4.38E-05
Ba-141	6.71E-08	5.01E-11	2.24E-09	No Data	4.65E-11	3.43E-11	1.43E-13
Ba-142	2.99E-08	2.99E-11	1.84E-09	No Data	2.53E-11	1.99E-11	9.18E-20
La-140	3.48E-09	1.71E-09	4.55E-10	No Data	No Data	No Data	9.82E-05
La-142	1.79E-10	7.95E-11	1.98E-11	No Data	No Data	No Data	2.42E-06
Ce-141	1.33E-08	8.88E-09	1.02E-09	No Data	4.18E-09	No Data	2.54E-05
Ce-143	2.35E-09	1.71E-06	1.91E-10	No Data	7.67E-10	No Data	5.14E-05
Ce-144	6.96E-07	2.88E-07	3.74E-08	No Data	1.72E-07	No Data	1.75E-04
Pr-143	1.31E-08	5.23E-09	6.52E-10	No Data	3.04E-09	No Data	4.31E-05
Pr-144	4.30E-11	1.76E-11	2.18E-12	No Data	1.01E-11	No Data	4.74E-14
Nd-147	9.38E-09	1.02E-08	6.11E-10	No Data	5.99E-09	No Data	3.68E-05
W-187	1.46E-07	1.19E-07	4.17E-08	No Data	No Data	No Data	3.22E-05
Np-239	1.76E-09	1.66E-10	9.22E-11	No Data	5.21E-10	No Data	2.67E-05

Table 9-14. Ingestion Dose Factors for the Adult Age Group

Nuclide	Bone	Liver	T. Body	Thyroid	Kidney	Lung	GI-LLI
H-3	No Data	1.05E-07	1.05E-07	1.05E-07	1.05E-07	1.05E-07	1.05E-07
C-14	2.84E-06	5.68E-07	5.68E-07	5.68E-07	5.68E-07	5.68E-07	5.68E-07
Na-24	1.70E-06	1.70E-06	1.70E-06	1.70E-06	1.70E-06	1.70E-06	1.70E-06
P-32	1.93E-04	1.20E-05	7.46E-06	No Data	No Data	No Data	2.17E-05
Cr-51	No Data	No Data	2.66E-09	1.59E-09	5.86E-10	3.53E-09	6.69E-07
Mn-54	No Data	4.57E-06	8.72E-07	No Data	1.36E-06	No Data	1.40E-05
Mn-56	No Data	1.15E-07	2.04E-08	No Data	1.46E-07	No Data	3.67E-06
Fe-55	2.75E-06	1.90E-06	4.43E-07	No Data	No Data	1.06E-06	1.09E-06
Fe-59	4.34E-06	1.02E-05	3.91E-06	No Data	No Data	2.85E-06	3.40E-05
Co-58	No Data	7.45E-07	1.67E-06	No Data	No Data	No Data	1.51E-05
Co-60	No Data	2.14E-06	4.72E-06	No Data	No Data	No Data	4.02E-05
Ni-63	1.30E-04	9.01E-06	4.36E-06	No Data	No Data	No Data	1.88E-06
Ni-65	5.28E-07	6.86E-08	3.13E-08	No Data	No Data	No Data	1.74E-06
Cu-64	No Data	8.33E-08	3.91E-08	No Data	2.10E-07	No Data	7.10E-06
Zn-65	4.84E-06	1.54E-05	6.96E-06	No Data	1.03E-05	No Data	9.70E-06
Zn-69	1.03E-08	1.97E-08	1.37E-09	No Data	1.28E-08	No Data	2.96E-09
Br-83	No Data	No Data	4.02E-08	No Data	No Data	No Data	5.79E-08
Br-84	No Data	No Data	5.21E-08	No Data	No Data	No Data	4.09E-13
Br-85	No Data	No Data	2.14E-09	No Data	No Data	No Data	No Data
Rb-86	No Data	2.11E-05	9.83E-06	No Data	No Data	No Data	4.16E-06
Rb-88	No Data	6.05E-08	3.21E-08	No Data	No Data	No Data	8.36E-19
Rb-89	No Data	4.01E-08	2.82E-08	No Data	No Data	No Data	2.33E-21
Sr-89	3.08E-04	No Data	8.84E-06	No Data	No Data	No Data	4.94E-05
Sr-90	7.58E-03	No Data	1.86E-03	No Data	No Data	No Data	2.19E-04
Sr-91	5.67E-06	No Data	2.29E-07	No Data	No Data	No Data	2.70E-05

All values are in (mrem/pCi ingested). They are obtained from Reference 3 (Table E–11), except as follows: Reference 2 (Table A–3) for Rh–105, Sb–124, and Sb–125.

Table 9-14 (contd). Ingestion Dose Factors for the Adult Age Group

Nuclide	Bone	Liver	T.Body	Thyroid	Kidney	Lung	GI-LLI
Sr-92	2.15E-06	No Data	9.30E-08	No Data	No Data	No Data	4.26E-05
Y-90	9.62E-09	No Data	2.58E-10	No Data	No Data	No Data	1.02E-04
Y-91m	9.09E-11	No Data	3.52E-12	No Data	No Data	No Data	2.67E-10
Y-91	1.41E-07	No Data	3.77E-09	No Data	No Data	No Data	7.76E-05
Y-92	8.45E-10	No Data	2.47E-11	No Data	No Data	No Data	1.48E-05
Y-93	2.68E-09	No Data	7.40E-11	No Data	No Data	No Data	8.50E-05
Zr-95	3.04E-08	9.75E-09	6.60E-09	No Data	1.53E-08	No Data	3.09E-05
Zr-97	1.68E-09	3.39E-10	1.55E-10	No Data	5.12E-10	No Data	1.05E-04
Nb-95	6.22E-09	3.46E-09	1.86E-09	No Data	3.42E-09	No Data	2.10E-05
Mo-99	No Data	4.31E-06	8.20E-07	No Data	9.76E-06	No Data	9.99E-06
Tc-99m	2.47E-10	6.98E-10	8.89E-09	No Data	1.06E-08	3.42E-10	4.13E-07
Tc-101	2.54E-10	3.66E-10	3.59E-09	No Data	6.59E-09	1.87E-10	1.10E-21
Ru-103	1.85E-07	No Data	7.97E-08	No Data	7.06E-07	No Data	2.16E-05
Ru-105	1.54E-08	No Data	6.08E-09	No Data	1.99E-07	No Data	9.42E-06
Ru-106	2.75E-06	No Data	3.48E-07	No Data	5.31E-06	No Data	1.78E-04
Rh-105	1.22E-07	8.86E-08	5.83E-08	No Data	3.76E-07	No Data	1.41E-05
Ag-110m	1.60E-07	1.48E-07	8.79E-08	No Data	2.91E-07	No Data	6.04E-05
Sb-124	2.81E-06	5.30E-08	1.11E-06	6.79E-09	No Data	2.18E-06	7.95E-05
Sb-125	2.23E-06	2.40E-08	4.48E-07	1.98E-09	No Data	2.33E-04	1.97E-05
Te-125m	2.68E-06	9.71E-07	3.59E-07	8.06E-07	1.09E-05	No Data	1.07E-05
Te-127m	6.77E-06	2.42E-06	8.25E-07	1.73E-06	2.75E-05	No Data	2.27E-05
Te-127	1.10E-07	3.95E-08	2.38E-08	8.15E-08	4.48E-07	No Data	8.68E-06
Te-129m	1.15E-05	4.29E-06	1.82E-06	3.95E-06	4.80E-05	No Data	5.79E-05
Te-129	3.14E-08	1.18E-08	7.65E-09	2.41E-08	1.32E-07	No Data	2.37E-08
Te-131m	1.73E-06	8.46E-07	7.05E-07	1.34E-06	8.57E-06	No Data	8.40E-05
Te-131	1.97E-08	8.23E-09	6.22E-09	1.62E-08	8.63E-08	No Data	2.79E-09

Table 9-14 (contd). Ingestion Dose Factors for the Adult Age Group

Nuclide	Bone	Liver	T.Body	Thyroid	Kidney	Lung	GI-LLI
Te-132	2.52E-06	1.63E-06	1.53E-06	1.80E-06	1.57E-05	No Data	7.71E-05
I-130	7.56E-07	2.23E-06	8.80E-07	1.89E-04	3.48E-06	No Data	1.92E-06
I-131	4.16E-06	5.95E-06	3.41E-06	1.95E-03	1.02E-05	No Data	1.57E-06
I-132	2.03E-07	5.43E-07	1.90E-07	1.90E-05	8.65E-07	No Data	1.02E-07
I-133	1.42E-06	2.47E-06	7.53E-07	3.63E-04	4.31E-06	No Data	2.22E-06
I-134	1.06E-07	2.88E-07	1.03E-07	4.99E-06	4.58E-07	No Data	2.51E-10
I-135	4.43E-07	1.16E-06	4.28E-07	7.65E-05	1.86E-06	No Data	1.31E-06
Cs-134	6.22E-05	1.48E-04	1.21E-04	No Data	4.79E-05	1.59E-05	2.59E-06
Cs-136	6.51E-06	2.57E-05	1.85E-05	No Data	1.43E-05	1.96E-06	2.92E-06
Cs-137	7.97E-05	1.09E-04	7.14E-05	No Data	3.70E-05	1.23E-05	2.11E-06
Cs-138	5.52E-08	1.09E-07	5.40E-08	No Data	8.01E-08	7.91E-09	4.65E-13
Ba-139	9.70E-08	6.91E-11	2.84E-09	No Data	6.46E-11	3.92E-11	1.72E-07
Ba-140	2.03E-05	2.55E-08	1.33E-06	No Data	8.67E-09	1.46E-08	4.18E-05
Ba-141	4.71E-08	3.56E-11	1.59E-09	No Data	3.31E-11	2.02E-11	2.22E-17
Ba-142	2.13E-08	2.19E-11	1.34E-09	No Data	1.85E-11	1.24E-11	3.00E-26
La-140	2.50E-09	1.26E-09	3.33E-10	No Data	No Data	No Data	9.25E-05
La-142	1.28E-10	5.82E-11	1.45E-11	No Data	No Data	No Data	4.25E-07
Ce-141	9.36E-09	6.33E-09	7.18E-10	No Data	2.94E-09	No Data	2.42E-05
Ce-143	1.65E-09	1.22E-06	1.35E-10	No Data	5.37E-10	No Data	4.56E-05
Ce-144	4.88E-07	2.04E-07	2.62E-08	No Data	1.21E-07	No Data	1.65E-04
Pr-143	9.20E-09	3.69E-09	4.56E-10	No Data	2.13E-09	No Data	4.03E-05
Pr-144	3.01E-11	1.25E-11	1.53E-12	No Data	7.05E-12	No Data	4.33E-18
Nd-147	6.29E-09	7.27E-09	4.35E-10	No Data	4.25E-09	No Data	3.49E-05
W-187	1.03E-07	8.61E-08	3.01E-08	No Data	No Data	No Data	2.82E-05
Np-239	1.19E-09	1.17E-10	6.45E-11	No Data	3.65E-10	No Data	2.40E-05

Table 9-15. External Dose Factors for Standing on Contaminated Ground

Nuclide	T. Body	Skin
H-3	0.00	0.00
C-14	0.00	0.00
Na-24	2.50E-08	2.90E-08
P-32	0.00	0.00
Cr-51	2.20E-10	2.60E-10
Mn-54	5.80E-09	6.80E-09
Mn-56	1.10E-08	1.30E-08
Fe-55	0.00	0.00
Fe-59	8.00E-09	9.40E-09
Co-58	7.00E-09	8.20E-09
Co-60	1.70E-08	2.00E-08
Ni-63	0.00	0.00
Ni-65	3.70E-09	4.30E-09
Cu-64	1.50E-09	1.70E-09
Zn-65	4.00E-09	4.60E-09
Zn-69	0.00	0.00
Br-83	6.40E-11	9.30E-11
Br-84	1.20E-08	1.40E-08
Br-85	0.00	0.00
Rb-86	6.30E-10	7.20E-10
Rb-88	3.50E-09	4.00E-09
Rb-89	1.50E-08	1.80E-08
Sr-89	5.60E-13	6.50E-13
Sr-90	0.00	0.00

Nuclide	T. Body	Skin
Sr-91	7.10E-09	8.30E-09
Sr-92	9.00E-09	1.00E-08
Y-90	2.20E-12	2.60E-12
Y-91m	3.80E-09	4.40E-09
Y-91	2.40E-11	2.70E-11
Y-92	1.60E-09	1.90E-09
Y-93	5.70E-10	7.80E-10
Zr-95	5.00E-09	5.80E-09
Zr-97	5.50E-09	6.40E-09
Nb-95	5.10E-09	6.00E-09
Mo-99	1.90E-09	2.20E-09
Tc-99m	9.60E-10	1.10E-09
Tc-101	2.70E-09	3.00E-09
Ru-103	3.60E-09	4.20E-09
Ru-105	4.50E-09	5.10E-09
Ru-106	1.50E-09	1.80E-09
Rh-105	6.60E-10	7.70E-10
Ag-110m	1.80E-08	2.10E-08
Sb-124	1.30E-08	1.50E-08
Sb-125	3.10E-09	3.50E-09
Te-125m	3.50E-11	4.80E-11
Te-127m	1.10E-12	1.30E-12
Te-127	1.00E-11	1.10E-11
Te-129m	7.70E-10	9.00E-10

All values are in (mrem/h) per (pCi/m^2). They are obtained from Reference 3 (Table E-6), except as follows: Reference 2 (Table A–7) for Rh-105, Sb-124, and Sb-125.

Table 9-15 (contd). External Dose Factors for Standing on Contaminated Ground

Nuclide	T.Body	Skin
Te-129	7.10E-10	8.40E-10
Te-131m	8.40E-09	9.90E-09
Te-131	2.20E-09	2.60E-06
Te-132	1.70E-09	2.00E-09
I-130	1.40E-08	1.70E-08
I-131	2.80E-09	3.40E-09
I-132	1.70E-08	2.00E-08
I-133	3.70E-09	4.50E-09
I-134	1.60E-08	1.90E-08
I-135	1.20E-08	1.40E-08
Cs-134	1.20E-08	1.40E-08
Cs-136	1.50E-08	1.70E-08
Cs-137	4.20E-09	4.90E-09
Cs-138	2.10E-08	2.40E-08
Ba-139	2.40E-09	2.70E-09
Ba-140	2.10E-09	2.40E-09
Ba-141	4.30E-09	4.90E-09
Ba-142	7.90E-09	9.00E-09
La-140	1.50E-08	1.70E-08
La-142	1.50E-08	1.80E-08
Ce-141	5.50E-10	6.20E-10
Ce-143	2.20E-09	2.50E-09
Ce-144	3.20E-10	3.70E-10
Pr-143	0.00	0.00
Pr-144	2.00E-10	2.30E-10
Nd-147	1.00E-09	1.20E-09
W-187	3.10E-09	3.60E-09
Np-239	9.50E-10	1.10E-09

CHAPTER 10
DEFINITIONS OF EFFLUENT CONTROL TERMS

The terms defined in this chapter are used in the presentation of the above chapters. These terms are shown in all capital letters to indicate that they are specifically defined.

10.1 TERMS SPECIFIC TO THE ODCM

The following terms are used in the ODCM, but are not found in the Technical Specifications:

ACTION(S)

An ACTION shall be that part of a control that prescribes remedial measures required under designated conditions.

BATCH RELEASE

A BATCH RELEASE is the discharge of wastes of a discrete volume. Prior to sampling for analyses, each liquid batch shall be isolated and then thoroughly mixed by a method described in the ODCM to assure representative sampling.

COMPOSITE SAMPLE

A COMPOSITE SAMPLE is one which contains material from multiple waste releases, in which the quantity of sample is proportional to the quantity of waste discharged, and in which the method of sampling employed results in a specimen that is representative of the wastes released. Prior to analyses, all liquid samples that are to be aliquotted for a COMPOSITE SAMPLE shall be mixed thoroughly, in order for the COMPOSITE SAMPLE to be representative of the effluent release.

When assessing the consequences of a waste release at the pre-release or post-release stage, the most recent available COMPOSITE SAMPLE results for the applicable release pathway may be used.

CONTINUOUS RELEASE

A CONTINUOUS RELEASE is the discharge of wastes of a non-discrete volume, e.g., from a volume within a system that has an input flow during the continuous release. To be representative of the quantities and concentrations of radioactive materials in CONTINUOUS RELEASES of liquid effluents, samples shall be collected in proportion to the rate of flow of the effluent stream or to the quantity of liquid waste discharged.

FREQUENCY NOTATION

The FREQUENCY NOTATION specified for the performance of surveillance requirements shall correspond to the intervals defined below, with a maximum allowable extension not to exceed 25% of the surveillance interval.

NOTATION	FREQUENCY
S (Once per shift)	At least once per 12 hours.
D (Daily)	At least once per 24 hours.
W (Weekly)	At least once per 7 days.
M (Monthly)	At least once per 31 days.
SM (Semi-Monthly)	At least twice per calendar month*

Q (Quarterly)	At least once per 92 days.
SA (Semi–annually)	At least once per 184 days.
R (Refueling)	At least once per 18 months.
S/U (Startup)	Prior to each reactor startup.
NA	Not applicable.
P (Prior)	Completed prior to each release.

*Semi-monthly sampling means one sample on two different weeks of every calendar month. No other grace period applies.

GASEOUS WASTE PROCESSING SYSTEM

A GASEOUS WASTE PROCESSING SYSTEM shall be any system designed and installed to reduce radioactive gaseous effluents by collecting Reactor Coolant System offgases from the Reactor Coolant System and providing for delay or holdup for the purpose of reducing the total radioactivity prior to release to the environment.

LIQUID RADWASTE TREATMENT SYSTEM

A LIQUID RADWASTE TREATMENT SYSTEM is any system designed and installed to reduce radioactive materials in liquid effluents by systematic collection, retention, and processing through filtration, evaporation, separation and/or ion exchange treatment. This system consists of at least one collection tank, one evaporator or demineralizer system, one post-treatment tank and associated components providing for treatment flow and functional control.

MAJOR CHANGES TO RADIOACTIVE WASTE TREATMENT SYSTEMS

For the purposes of the ODCM, MAJOR CHANGES TO RADIOACTIVE WASTE TREATMENT SYSTEMS include the following changes to such systems:

(1) Major changes in process equipment, components, structures, or effluent monitoring instrumentation as described in the Final Safety Analysis Report (FSAR) or as evaluated in the Nuclear Regulatory Commission staff's Safety Evaluation Report (SER) (e.g., deletion of evaporators and installation of demineralizers);

(2) Changes in the design of radwaste treatment systems that could significantly increase quantities of effluents released from those previously considered in the FSAR and SER;

(3) Changes in system design which may invalidate the accident analysis as described in the SER (e.g., changes in tank capacity that would alter the curies released); or

(4) Changes in system design that could potentially result in a significant increase in occupational exposure of operating personnel (e.g., use of temporary equipment without adequate shielding provisions).

MEMBER(S) OF THE PUBLIC[1]

A MEMBER OF THE PUBLIC means any individual except when that individual is receiving an *occupational dose*[2]. This category may include persons who use portions of the site for recreational, occupational, or other purposes not associated with the plant.

MINIMUM DETECTABLE CONCENTRATION

The MINIMUM DETECTABLE CONCENTRATION (MDC) is defined, for purposes of the controls in this ODCM, as the smallest concentration of radioactive material in a sample that will yield a net count above system background and that will be detected with 95-percent probability, with only 5-percent probability of falsely concluding that a blank observation represents a "real" signal.

For a particular measurement system, which may include radiochemical separation, the MDC for a given radionuclide is determined as follows (Reference 18):

where:

MDC = the *a priori* MINIMUM DETECTABLE CONCENTRATION (μCi per unit mass or volume).

$$MDC = \frac{\dfrac{2.71}{t_s} + 3.29\sqrt{R_b\left(\dfrac{1}{t_s} + \dfrac{1}{t_b}\right)}}{E \cdot V \cdot 2.22 \times 10^6 \cdot Y \cdot e^{-\lambda \Delta t}}$$

R_b = the background counting rate, or the counting rate of a blank sample, as appropriate (counts per minute).

t_s = the length of the sample counting period (minutes).

t_b = the length of the background counting period (minutes).

E = the counting efficiency (counts per disintegration)

V = the sample size (units of mass or volume).

2.22×10^6 = the number of disintegrations per minute per μCi.

Y = the fractional radiochemical yield, when applicable.

λ = the radioactive decay constant for the given radionuclide (h^{-1}). Values of λ used in effluent calculations should be based on decay data from a recognized and current source, such as Reference 20.

Δt = for effluent samples, the elapsed time between the midpoint of sample collection and the time of counting (h); for environmental samples, the elapsed time between the end of sample collection and the time of counting (h).

[1] The italicized terms in this definition, which are not otherwise used in this ODCM, shall have the definitions assigned to them by 10 CFR 20.1003.

[2] Except as delineated in other parts of 10 CFR chapter I.

Typical values of E, V, Y, and Δt should be used in the calculation. It should be recognized that the MDC is defined as an *a priori* (before the fact) limit representing the capability of a measurement system, and not as an *a posteriori* (after the fact) limit for a particular measurement.

PRINCIPAL GAMMA EMITTERS

The PRINCIPAL GAMMA EMITTERS for which the MINIMUM DETECTABLE CONCENTRATION (MDC) limit applies include exclusively the following radionuclides:

- For liquid radioactive effluents: Mn–54, Fe–59, Co–58, Co–60, Zn–65, Mo–99, Cs-134, Cs–137, and Ce–141. Ce–144 shall also be measured, but with an MDC of 5×10^{-6} µCi/mL.

- For gaseous radioactive effluents: In noble gas releases, Kr–87, Kr–88, Xe–133, Xe–133m, Xe–135, Xe–138; and in particulate releases, Mn–54, Fe–59, Co–58, Co-60, Zn–65, Mo–99, Cs–134, Cs–137, Ce–141, and Ce–144.

- For environmental media: The gamma emitters specifically listed in Table 4-3.

These lists do not mean that only these nuclides are to be considered. Other gamma peaks that are identifiable, together with those of the above nuclides, shall also be analyzed and reported in the Radioactive Effluent Release Report, the Annual Radiological Environmental Operating Report, or other applicable report(s).

SITE BOUNDARY

For the purpose of effluent controls defined in the ODCM, the SITE BOUNDARY shall be as shown in Figure 4-1.

SOURCE CHECK

A SOURCE CHECK shall be the qualitative assessment of channel response when the channel sensor is exposed to a source of increased radioactivity.

UNRESTRICTED AREA

The UNRESTRICTED AREA shall be any area access to which is neither limited nor controlled by the licensee, or any area within the SITE BOUNDARY used for residential quarters or for industrial, commercial, institutional, and/or recreational purposes.

VENTILATION EXHAUST TREATMENT SYSTEM

The VENTILATION EXHAUST TREATMENT SYSTEM is any system designed and installed to reduce gaseous radioiodine or radioactive material in particulate form in effluents, by passing ventilation or vent exhaust gases through charcoal adsorbers and/or HEPA filters, for the purpose of removing iodines or particulates from the gaseous exhaust stream prior to the release to the environment. (Such a system is not considered to have any effect on any noble gas effluents). Engineered Safety Feature (ESF) atmospheric cleanup systems are not considered to be VENTILATION EXHAUST TREATMENT SYSTEM components.

10.2 TERMS DEFINED IN THE TECHNICAL SPECIFICATIONS

The following terms are defined in the Technical Specifications, Section 1.0. Because they are used throughout the Limits of Operation sections of the ODCM, they are presented here for convenience. In the event of discrepancies between the definitions below and those in the Technical Specifications, the Technical Specification definitions shall take precedence.

CHANNEL CALIBRATION

A CHANNEL CALIBRATION shall be the adjustment, as necessary, of the channel, such that it responds within the required range and accuracy to known values of input. The CHANNEL CALIBRATION shall encompass the entire channel including the required sensor, alarm, interlock, and/or trip functions and may be performed by any series of sequential, overlapping, or total channel steps, so that the entire channel is calibrated.

CHANNEL CHECK

A CHANNEL CHECK shall be the qualitative assessment of channel behavior during operation by observation. This determination shall include, where possible, comparison of the channel indication and/or status with other indications and/or status derived from independent instrument channels measuring the same parameter.

CHANNEL FUNCTIONAL TEST (CFT)

A CHANNEL FUNCTIONAL TEST shall be the injection of a simulated signal into the channel as close to the sensor as practicable to verify FUNCTIONALITY of required alarm, interlock, and/or trip functions. The CHANNEL FUNCTIONAL TEST shall include adjustments, as necessary, of the required alarm, interlock, and/or trip setpoints, so that the setpoints are within the required range and accuracy.

DOSE EQUIVALENT I–131

DOSE EQUIVALENT I–131 shall be that concentration of I–131 (μCi/g) which alone would produce the same thyroid dose as the quantity and isotopic mixture of I–131, I–132, I–133, I–134, and I–135 actually present. The thyroid dose conversion factors used for this calculation shall be those listed in EPA Federal Guidance Report No. 11, "Limiting Values of Radionuclide Intake and Air Concentration and Dose Conversion Factors for Inhalation, Submersion, and Ingestion," EPA-520/1-88-020, September 1988.

MODE (or OPERATIONAL MODE)

An OPERATIONAL MODE shall correspond to any one inclusive combination of core reactivity condition, power level, average reactor coolant temperature, and reactor vessel head closure bolt tensioning specified in Section 1.0 of the Technical Specifications with fuel in the reactor vessel.

FUNCTIONAL (or FUNCTIONALITY)

FUNCTIONALITY exists when a system, subsystem, train, component or device is capable of performing its specified function(s), and when all necessary attendant instrumentation, controls, electrical power, cooling or seal water, lubrication or other auxiliary equipment that are required for the system, subsystem, train, component or device to perform its function(s) are also capable of performing their related support function(s).

RATED THERMAL POWER

RATED THERMAL POWER shall be a total reactor core heat transfer rate to the reactor coolant of 3565 MWt.

THERMAL POWER

THERMAL POWER shall be the total reactor core heat transfer rate to the reactor coolant.