Safety Evaluation Report

Renewal of the Facility Operating License for the University of Maryland - Maryland University Training Reactor

License No. R-70
Docket No. 50-166

U.S. Nuclear Regulatory Commission

Office of Nuclear Reactor Regulation

December, 2016

ABSTRACT

This safety evaluation report summarizes the findings of a safety review conducted by the staff of the U.S. Nuclear Regulatory Commission (NRC), Office of Nuclear Reactor Regulation. The NRC staff conducted this review in response to a timely application filed by the University of Maryland (UMD, or the licensee) for a 20-year renewal of Facility Operating License No. R-70 to continue operating the Maryland University Training Reactor (MUTR or the facility). In its safety review, the NRC staff considered information submitted by the licensee, including past operating history recorded in the licensee's annual reports to the NRC, inspection reports prepared by NRC staff, and firsthand observations. On the basis of its safety and environmental review, the NRC staff concludes that the licensee can continue to operate the facility for the term of the renewed facility license, in accordance with the license, without endangering public health and safety, MUTR staff, or the environment.

CONTENTS

LIST OF TABLES

LIST OF FIGURES

ABBREVIATIONS, ACRONYMS AND SYMBOLS

$	dollar(s) (unit of reactivity or United States currency)
°C	degree(s) Celsius
°F	degree(s) Fahrenheit
ADAMS	Agencywide Documents Access and Management System
AEA	Atomic Energy Act of 1954, as amended
ALARA	as low as reasonably achievable
ANS	American Nuclear Society
ANSI	American National Standards Institute
Ar-41	argon-41
B_4C	boron carbide
CEDE	committed effective dose equivalent
10 CFR	Title 10 of the *Code of Federal Regulations*
cm	centimeter(s)
cps	count(s) per second
DDE	deep-dose equivalent
DNBR	departure from nucleate boiling ratio
DOE	U.S. Department of Energy
FR	*Federal Register*
ft	foot/feet
GA	General Atomics
H	hydrogen
Hr	hour
IFE	instrumented fuel element
in	inch(es)
IR	inspection report
ISG	interim staff guidance

k_{eff}	effective multiplication factor
kW	kilowatt(s)
kWt	kilowatt(s) thermal
LCO	limiting condition(s) for operation
LEU	low-enriched uranium
LOCA	loss-of-coolant accident
LRA	license renewal application
LSSS	limiting safety system setting
m	meter(s)
m^3	cubic meter(s)
m/s	meters per second
mCi	millicurie(s)
mg	milligram(s)
MHA	maximum hypothetical accident
mm	millimeter(s)
mrem	millirem(s)
mrem/hr	millirem(s) per hour (also mR/hr)
MTR	materials testing reactor
MUTR	Maryland University Training Reactor
MWt	megawatt(s) thermal
N-16	nitrogen-16
n/cm^2-s	neutrons per square centimeter per second
NRC	U.S. Nuclear Regulatory Commission
NRR	Office of Nuclear Reactor Regulation
PDR	Public Document Room
pH	hydrogen-ion-concentration
PTS	pneumatic transfer system
RAI	request for additional information
RSC	Reactor Safety Committee

s	second(s)
SAR	safety analysis report
SDM	shutdown margin
SER	safety evaluation report
SL	safety limit
SNM	special nuclear material
SOI	statement(s) of intent
SRM	staff requirements memorandum/memoranda
Sv	sievert(s)
T-H	thermal-hydraulic(s)
TEDE	total effective dose equivalent
TNT	trinitrotoluene
TRIGA	Training, Research, Isotopes, General Atomics
TS	technical specification(s)
U	uranium
U-235	uranium-235 (^{235}U)
U-238	uranium-238
UMD	University of Maryland
U-ZrH_x	uranium-zirconium hydride
w%	weight percent
yr	year
Zr	zirconium
ZrH	zirconium hydride
ZrH_x	zirconium hydride with x representing the stoichiometry ratio of hydrogen to zirconium
β_{eff}	effective delayed neutron fraction
μCi/mL	microcurie(s) per milliliter
μm	micrometer(s)

1 INTRODUCTION

1.1 Overview

By letter dated May 12, 2000, as supplemented by letters dated June 7, August 4, September 17, and October 7, 2004; April 18, 2005; April 25 (two letters), August 28 (two letters), September 7, November 9, and December 18, 2006; May 27, July 28, and September 22, 2010; January 31, February 2, May 2, July 5, July 29, September 26, September 28, and October 12, 2011; February 9, March 14, May 22, and August 29, 2012; March 21, 2013; April 10, June 18, and November 25, 2014 (two letters); July 1, November 23, and December 2, 2015; and January 5, February 29, November 1, November 2, November 10, November 17 (two letters), and December 2, 2016, the University of Maryland (UMD or the licensee) submitted to the United States Nuclear Regulatory Commission (NRC) an application for a 20-year renewal of Facility Operating License No. R-70 for the Maryland University Training Reactor (MUTR or the facility). Because of the timely renewal provision in 10 CFR 2.109(a), the licensee is permitted to continue operating the MUTR under the terms and conditions of the current license until the NRC staff completes action on the renewal request. A renewal would authorize the licensee to continue operation of the MUTR for an additional 20 years. The NRC staff published a noticed of opportunity for hearing in the *Federal Register* (FR) on July 26, 2010 (75 FR 43566). No requests for a hearing were received.

Title 10 of the *Code of Federal Regulations* (10 CFR) 50.51(a) (Ref. 22) states that "[e]ach license will be issued for a fixed period of time to be specified in the license but in no case to exceed 40 years from date of issuance." The UMD holds the Class 104c Facility Operating License No. R-70, Docket No. 50-166, originally issued on October 14, 1960, by the U.S. Atomic Energy Commission for the MUTR. From 1960 to 1969, the MUTR operated with materials testing reactor (MTR)-type fuel at a licensed thermal power level of 10 kilowatts (kWt). In 1969, the licensee initiated a long-range program of upgrading the reactor facility. After major changes in fuel type, control rod systems, and control instrumentation, the MUTR was licensed, in June 1974, to operate with Training, Research, Isotopes, General Atomics (TRIGA)-type uranium-zirconium hydride ($U\text{-}ZrH_x$) fuel at steady-state power levels up to 250 kWt. The NRC reissued the MUTR facility operating license on August 7, 1984, for a period of 20 years, expiring on June 29, 2000.

The NRC staff based its review of the request to renew the MUTR facility operating license on the information contained in the license renewal application (LRA), supporting supplements, and the licensee's responses to requests for additional information (RAIs). The initial 2000 LRA included a safety analysis report (SAR) with technical specifications (TSs) and an environmental report. In the SAR, the licensee provided information on the physical security plan, emergency plan, environmental report, financial qualifications, decommissioning, and operator requalification. The NRC staff conducted site visits to observe facility conditions and to discuss RAIs, RAI responses, and TSs. During the review process, the NRC staff issued RAIs on October 10, 2002 (Ref. 81); December 10, 2009 (Ref. 82); April 6 (Ref. 83) and August 20, 2010 (Ref. 85); February 17 (Ref. 86), June 22 (Ref. 87), August 26 (Ref. 88), and September 8, 2011 (Ref. 89); February 15 (Ref. 75) and July 16, 2012 (Ref. 76); June 2 (Ref. 90) and September 25, 2014 (Ref. 91); and July 28 (Ref. 92), November 9 (Ref. 94), and December 2, 2016 (Ref. 100).

The licensee responded to the RAIs by letter dated May 12, 2000 (Ref. 1), as supplemented by letters dated June 7 (Ref. 2), August 4 (Ref. 3), September 17 (Ref. 4), and October 7, 2004

(Ref. 5); April 18, 2005 (Ref. 6); April 25, (two letters) (Refs. 7 and 8), August 28 (two letters) (Refs. 9 and 10), September 7 (Ref. 55), November 9 (Ref. 11), and December 18, 2006 (Ref. 12); May 27 (Ref. 59), July 28 (Ref. 13), and September 22, 2010 (Ref. 14); January 31 (Ref. 15), February 2 (Ref. 16), May 2 (Ref. 17), July 5 (Ref. 18), July 29 (Ref. 60), September 26 (Ref. 19), September 28 (Ref. 20), and October 12, 2011 (Ref. 21); February 9 (Ref. 61), March 14 (Ref. 62), May 22 (Ref. 63), and August 29, 2012 (Ref. 64); March 21, 2013 (Ref. 41); April 10 (Ref. 49), June 18 (Ref. 42), and November 25, 2014 (two letters) (Refs. 40 and 43); July 1 (Ref. 65), November 23 (Ref. 66), and December 2, 2015 (Ref. 56); and January 5 (Ref. 57), February 29 (Ref. 58), November 1 (Ref. 93), November 2 (Ref. 78), November 10 (Ref. 95), November 17 (two letters) (Refs. 96 and 97), and December 2, 2016 (Ref. 101). The NRC staff's review also included information from licensee's annual reports from 2011 through 2015 (Refs. 50 through 54) and NRC inspection reports (IRs) from 2012 through 2015 (Refs. 44 through 48).

With the exception of the physical security plan, portions of the SAR, RAI responses, and the emergency plan that contain security-related information, material pertaining to this review may be examined, or copied for a fee, at the NRC's Public Document Room (PDR), Room 01-F2, One White Flint North, 11555 Rockville Pike, Rockville, Maryland, 20852. The NRC maintains the Agencywide Documents Access and Management System (ADAMS), which provides text and image files of the NRC's public documents. Publicly available documents related to this license renewal may be accessed through the NRC's Public Library, ADAMS Public Documents collection at http://www.nrc.gov/reading-rm/adams.html. If you do not have access to ADAMS or if you experience problems accessing the documents in ADAMS, contact the NRC PDR staff by telephone at 1-800-397-4209 or 301-415-4737, or send an e-mail to the PDR at resources@nrc.gov. The physical security plan is protected from public disclosure under 10 CFR 73.21, "Protection of Safeguards Information: Performance Requirements," and 10 CFR 2.390(d). Since portions the SAR, RAI responses from the licensee contain security-related information and are protected from public disclosure, only redacted versions are available to the public.

Chapter 7 of this safety evaluation report (SER) contains the dates and associated ADAMS accession numbers of the licensee's LRA and related supplements.

In conducting this review, the NRC staff evaluated the facility against the requirements of the regulations, including 10 CFR Part 20, "Standards for Protection Against Radiation," 10 CFR Part 30, "Rules of General Applicability to Domestic Licensing of Byproduct Material," 10 CFR Part 50, "Domestic Licensing of Production and Utilization Facilities," 10 CFR Part 51, "Environmental Protection Regulations for Domestic Licensing and Related Regulatory Functions," and 10 CFR Part 70, "Domestic Licensing of Special Nuclear Material." The NRC staff also evaluated the facility against the recommendations of applicable regulatory guides and relevant accepted industry standards, such as those of the American National Standards Institute/American Nuclear Society (ANSI/ANS)-15 series. The NRC staff specifically referred to the recommendations contained in NUREG-1537, "Guidelines for Preparing and Reviewing Applications for the Licensing of Non-Power Reactors," issued February 1996 (Ref. 23). Because there are no specific accident-related regulations for research reactors, the NRC compares dose values for accidents against the requirements in 10 CFR Part 20.

In SECY-08-0161, "Review of Research and Test Reactor License Renewal Applications," dated October 24, 2008 (Ref. 24), the NRC staff provided the Commission with information about plans to streamline the review of LRAs for research and test reactors. The Commission issued its staff requirements memorandum (SRM) for SECY-08-0161, dated March 26, 2009

(Ref. 25). The SRM directed the NRC staff to streamline the renewal process for such research and test reactors, using some combination of the options presented in SECY-08-0161. The SRM also directed the NRC staff to implement a graded approach with a review scope commensurate with the risk posed by each facility. The graded approach incorporates elements of the alternative safety review approach discussed in Enclosure 1 to SECY-08-0161. In the alternative safety review approach, the NRC staff should consider the results of its past reviews when determining the scope of the review. A basic requirement, as contained in the SRM, is that the licensee must be in compliance with applicable regulatory requirements.

The NRC staff developed Interim Staff Guidance (ISG)-2009-001, "Interim Staff Guidance on the Streamlined Review Process for License Renewal of Research Reactors," dated October 15, 2009 (Ref. 26), to assist in the review of LRAs. The streamlined review process is a graded approach based on licensed power level. Under the streamlined review process, the facilities are divided into two tiers. Facilities with a licensed thermal power level of 2 megawatts (MWt) or greater, or that request a power level increase, would undergo a full review using NUREG-1537. Facilities with a licensed power level less than 2 MWt would undergo a focused review that centers on the most safety-significant aspects of the LRA and relies on past NRC reviews for certain safety findings. The NRC made a draft of the ISG available for public comment, and the NRC staff considered public comments in its development of the final ISG. Since the licensed power level for the MUTR is less than 2 MWt, the NRC staff performed a focused review of the UMD MUTR LRA using the guidance in the final ISG (Ref. 26). Specifically, the review focused on reactor design and operation, radiation protection, accident analysis, TSs, waste management programs, financial requirements, environmental assessment, and changes to the facility made after submittal of the application.

As part of the LRA review, the NRC staff reviewed the licensee's physical security plan, "Security Plan for The University of Maryland Training Reactor," submitted on December 19, 2014 (Ref. 67). The NRC staff issued an RAI to the licensee in a letter dated March 12, 2015 (Ref. 68), and the licensee responded in letters dated July 1 (Ref. 65) and November 23, 2015 (two letters) (Refs. 66 and 69); and February 10, 2016 (Ref. 70), including a revised physical security plan. The NRC staff reviewed the revised physical security plan, dated February 10, 2016, and finds that it is in compliance with the applicable regulations in 10 CFR Part 73, "Physical Protection of Plants and Materials," and in accordance with Regulatory Guide 5.59, "Standard Format and Content For A Licensee Physical Security Plan For The Protection Of Special Nuclear Material Of Moderate Or Low Strategic Significance," and the site-specific security measures the applicant committed to, as documented in the Confirmatory Action Letter dated March 2, 2004 (Ref. 71). The licensee maintains a program to provide for the physical protection of the facility and its special nuclear material (SNM) in accordance with the requirements of 10 CFR Part 73. The licensee can change the physical security plan in accordance with 10 CFR 50.54(p), as long as those changes do not decrease the plan's effectiveness. In addition, the NRC staff performs routine inspections of the licensee's compliance with the requirements of the physical security plan. The NRC staff's review of the MUTR IRs for the past several years identified no violations of the physical security plan requirements.

As part of the LRA review, the NRC staff also reviewed the licensee's emergency plan, "Emergency Preparedness Plan for the Maryland University Training Reactor," submitted on January 5, 2000 (Ref. 72). The NRC staff issued an RAI to the licensee in a letter dated March 11, 2014 (Ref. 73), and the licensee responded in a letter dated April 10, 2014 (Ref. 49), including a revised emergency plan. The NRC staff reviewed Revision 13 of the emergency plan and finds that it meets the applicable regulations. On the basis of its review, the NRC staff

concludes that “Emergency Preparedness Plan for the Maryland University Training Reactor,” Revision 13, is acceptable. Additionally, the licensee is required to maintain the emergency plan in compliance with 10 CFR 50.54(q) and Appendix E, “Emergency Planning and Preparedness for Production and Utilization Facilities,” to 10 CFR Part 50, which provides reasonable assurance that the licensee will continue to be prepared to assess and respond to emergency events. The NRC staff routinely inspects the licensee’s compliance with the requirements of the emergency plan and has identified no violations in recent years.

As part of the LRA review, the NRC staff reviewed the licensee’s requalification program, “Requalification/Training Program for the Maryland University Training Reactor,” submitted on August 26, 2010 (Ref. 74). The NRC staff issued RAIs by letters dated February 15 (Ref. 75) and July 16, 2012 (Ref. 76), and the licensee responded by letters dated March 14 (Ref. 62), May 22 (Ref. 63), and August 29, 2012 (Ref. 64), including an updated requalification program. The NRC staff reviewed and approved the updated requalification program, “Requalification/Training Program for the Maryland University Training Reactor,” dated August 13, 2012, by letter dated November 15, 2012 (Ref. 77).

The NRC staff separately evaluated the environmental impacts of the renewal of the license for the MUTR in accordance with 10 CFR Part 51. The NRC staff published an Environmental Assessment and Finding of No Significant Impact in the FR on December 22, 2016 (81 FR 93969), which concluded that renewal of the MUTR license will not have a significant effect on the quality of the human environment.

The purpose of this SER is to summarize the findings of the MUTR safety review and to delineate the technical details that the NRC staff considered in evaluating the radiological safety aspects of continued operation. This SER provides the basis for renewing the MUTR operating license for a period of 20 years to allow reactor operation at a steady-state power level of up to 250 kWt.

This SER was prepared by Eben Allen, Project Manager in the NRC’s Office of Nuclear Reactor Regulation (NRR), Division of Policy and Rulemaking, Research and Test Reactors Licensing Branch, and Kosmas Lois and Jo Ann Simpson, Financial Analysts in NRR’s Division of Inspection and Regional Support, Financial Analysis and International Projects Branch. Brookhaven National Laboratory and Energy Research Inc., the NRC’s contractors, also provided input to this SER.

1.2 Summary and Conclusions on Principal Safety Considerations

The NRC staff‘s review and evaluation considers the information submitted by the licensee, including past operating history recorded in the licensee’s annual operating reports to the NRC, as well as IRs prepared by the NRC staff. On the basis of this evaluation and resolution of the principal issues reviewed for the MUTR, the NRC staff concludes the following:

- The design and use of the reactor structures, systems, and components important to safety during normal operation discussed in Chapter 4 of the SAR, as supplemented, in accordance with the TSs are safe, and safe operation can reasonably be expected to continue.

- The facility will continue to be useful in the conduct of research and development activities.

- The licensee considered the expected consequences of a broad spectrum of postulated credible accidents and a maximum hypothetical accident (MHA), emphasizing those that could lead to a loss of integrity of fuel element cladding and a release of fission products. The licensee used conservative assumptions to analyze the most serious credible accidents and the MHA and determined that the calculated potential radiation doses for the facility staff and members of the public would not exceed 10 CFR Part 20 dose limits.

- The licensee's management organization, conduct of training, and research activities, in accordance with the TSs, are adequate to ensure safe operation of the facility.

- The systems provided for the control of radiological effluents, when operated in accordance with the TSs, are adequate to ensure that releases of radioactive materials from the facility are within the limits of the Commission's regulations and are as low as reasonably achievable (ALARA).

- The licensee's TSs, which provide limits controlling operation of the facility, are such that there is reasonable assurance that the facility will be operated safely and reliably. No significant degradation of the reactor has occurred, as discussed in Chapter 4 of the SAR, as supplemented, and the TSs will continue to ensure that no significant degradation of safety-related equipment will occur.

- The licensee has reasonable access to sufficient resources to cover operating costs and eventual decommissioning for the reactor facility.

- The licensee maintains a physical security plan for the facility and its SNM, in accordance with the requirements of 10 CFR Part 73, which provides reasonable assurance that the licensee will continue to provide for the physical protection of the facility and its SNM.

- The licensee maintains an emergency plan in compliance with 10 CFR 50.54(q) and Appendix E to 10 CFR Part 50, which provides reasonable assurance that the licensee will continue to be prepared to assess and respond to emergency events.

- The licensee maintains a requalification program in accordance with the requirements of 10 CFR 55.59. The licensee's procedures for training its reactor operators and the operator requalification plan give reasonable assurance that the licensee will continue to have qualified staff that can safely operate the reactor.

On the basis of these findings, the NRC staff concludes that there is reasonable assurance that the licensee can continue to operate the MUTR in accordance with the Atomic Energy Act (AEA) of 1954, as amended NRC regulations, and the renewed facility operating license without endangering public health and safety, facility staff, or the environment. The issuance of the renewed license will not be inimical to the common defense and security.

1.3 General Description

On October 14, 1960, the U.S. Atomic Energy Commission issued Facility Operating License No. R-70 to the UMD for the operation of the MUTR. The NRC subsequently renewed the license by License Amendment 7 on August 7, 1984. The facility operating license authorized the licensee to operate the MUTR at a steady-state power level up to 250 kWt.

The MUTR is located on the main campus of the UMD in College Park, MD, a suburb northeast of the District of Columbia. The reactor is housed in its own building, referred to as the reactor building, which is adjacent and connected to the Chemical and Nuclear Engineering Building at the northwest wing.

The reactor building is in the northeastern quadrant of the university campus. The campus has a peak daytime population of approximately 45,000, including students, faculty, and other persons. The reactor site lies within the Middle Potomac-Anacostia-Occoquan watershed, which consists of 19 streams and rivers with the Chesapeake Bay as the ultimate discharge site. The reactor building consists of concrete walls and floors reinforced by a steel frame and is designed to meet or exceed building codes existing at the time of construction. The reactor building has five entrances—four doors and a 15-foot (ft) (4.57 meter (m)) by 15-ft rolling steel door on the north side of the building. The building has no windows that can be opened and is designed to function as a confinement-type structure.

The MUTR is a heterogeneous, pool-type reactor with standard TRIGA fuel elements using partially enriched uranium (U) homogeneously mixed with zirconium hydride (ZrH_x) (The "x" in the U-ZrH_x nomenclature represents the hydrogen (H) to zirconium (Zr) stoichiometry ratio and is important because it influences many attributes of fuel behavior.) The reactor is presently fueled with TRIGA-type U-$ZrH_{1.7}$ solid fuel-moderator elements containing 8.5 weight percent U enriched to less than 20 percent isotopic enrichment of U-235, with a 1.7 H-to-Zr ratio in the Zr matrix. The reactor does not have pulsing capability. The moderator is the ZrH_x contained in the fuel and light water. The light water also serves as the reactor coolant, which circulates through the core by natural convection. The core is reflected by the pool of water and graphite.

The primary coolant system at the MUTR consists of a 21 ft deep (6.4 m), 7 ft diameter (2.1 m) aluminum-lined concrete pool in which the reactor core is submerged. A 17 ft (5.2 m) column of water is maintained above the core. Heat generated from the reactor core is directly transferred to the pool water by natural convection. This pool is made watertight by a 3/8-inch (in) (0.95-centimeter (cm))-thick aluminum liner that is affixed to the concrete walls and a 1/2-in (1.27-cm)-thick aluminum liner affixed to the concrete floor of the biological shield. Water in the reactor pool is kept below 90 degrees Celsius (194 degrees Fahrenheit) (by a closed-loop cooling system with a design flow rate of 120 gallons per minute (454.2 liters per minute). A pump takes water from a pipe located near the top of the reactor pool, passes it through a plate-type heat exchanger, and returns it through pipes that discharge near the bottom of the reactor pool. This system provides up to 300 kWt of heat removal capacity for the water in the reactor pool. An open-loop cooling system, originating from the city water system and discharging to the sanitary sewer system, removes heat from the shell side (secondary) of the heat exchanger. Design features of this system allow for the transfer of reactor heat from the primary system under all operating conditions, but the primary cooling system is not needed to operate the reactor as long as the primary coolant temperature is within limits. Operators control these systems remotely from the control room.

The reactor's experimental facilities include space adjacent to the reactor core, a pneumatic transfer system, beam tubes, and a thermal column. Three control rods using boron carbide as the neutron absorber are moved in and out of the reactor core by individual mechanical drives. The three control rods can be disengaged to drop by gravity into the core to scram the reactor.

1.4 Shared Facilities and Equipment

Section 1.4 of the SAR (Ref. 1) describes shared utilities. The reactor building, situated partially below grade, contains the reactor bay, a mechanical equipment room, and the primary piping vault. Offices for reactor program staff and laboratories associated with the MUTR are located in the adjoining Chemical and Nuclear Engineering Building. Reactor building utilities, such as electricity, water, natural gas, and sewage, are provided through the adjoining Chemical and Nuclear Engineering Building complex.

1.5 Comparison with Similar Facilities

The TRIGA-type nuclear reactor built by General Atomics (GA) is one of the most widely used research and training reactors in the United States. GA developed a fuel assembly that contains up to four TRIGA fuel elements to allow the conversion of MTR-type reactors to TRIGA reactors. The bottom adapter on the fuel assembly fits into the MTR-type grid plate. TRIGA reactors exist in a variety of configurations and capabilities (Ref. 27). The MUTR is similar in design to TRIGA reactor facilities at Texas A&M University, Washington State University, and the University of Wisconsin, each licensed by the NRC to operate up to 1 MWt. The instruments and controls on the MUTR are similar in principle to many non-power reactors licensed by the NRC. The pool size and experimental facility configuration differ at these four TRIGA-type reactors, but basic reactor behavior and accident analyses are similar.

1.6 Summary of Operations

The licensee uses the MUTR for educational instruction and operator training. Occasional irradiation work is performed for local government and industry organizations. The operation schedule is on the order of two operations per week. Through 2015, the MUTR has accumulated approximately 198 megawatt-days of operation. The licensee indicated that it expects to maintain the present utilization rate for the upcoming license renewal period.

The NRC staff's review considered the licensee's annual reports from 2011 through 2015 (Refs. 50 through 54) and NRC IRs from 2012 through 2016. The annual report summaries did not indicate any significant degradation of fuel element integrity, control rod operability issues, or radiological exposure concerns. The fuel temperature and scram circuits required for operation are calibrated routinely. The NRC staff's review of the IRs did not indicate any violations during this period.

1.7 Compliance with the Nuclear Waste Policy Act of 1982

Section 302(b)(1)(B) of the Nuclear Waste Policy Act of 1982, 42 U.S.C. §10222(b)(1)(B), specifies that the NRC may require, as a precondition to issuing or renewing a facility operating license for a research or test reactor, that the licensee shall have entered into an agreement with the U.S. Department of Energy (DOE) for the disposal of high-level radioactive wastes and spent nuclear fuel.

In a letter dated May 3, 1983, (Ref. 29), R.L. Morgan of DOE informed H. Denton of the NRC that DOE has determined that universities and other government agencies operating non-power reactors have entered into contracts with DOE providing that DOE retains title to the fuel and is obligated to take the spent fuel and high-level waste for storage or reprocessing. An e-mail sent from Kenny Osborne of DOE to Duane Hardesty of the NRC (Ref. 28) reconfirms this contractual obligation with respect to the fuel at the MUTR (DOE Contract No. 78199, valid from

August 1, 2008, to December 31, 2017. By entering into this contract with DOE, the licensee has satisfied the requirements of the Nuclear Waste Policy Act of 1982.

1.8 Facility Modifications and History

Construction Permit No. CPRR-53, issued on June 29, 1960, authorized the construction of the MUTR. Construction of the facility was completed in 1960 and Facility Operating License No. R-70, issued on October 14, 1960, authorized the operation of the MUTR. The MUTR achieved initial criticality on October 28, 1960, as a 10 kWt training reactor with MTR-type fuel elements. In SAR Section 1.8, the licensee indicated the following modifications were made to the MUTR:

(1) The licensee submitted an application on June 30, 1969, for a construction permit to modernize the MUTR.

- A laboratory balcony area was constructed to augment the university research and reactor operating programs at the MUTR.
- A pool cooling system was installed to allow for steady-state operation at an increased power level of up to 250 kWt with a TRIGA-type core.
- A pneumatic tube system was installed to allow pneumatic sample delivery from the preparation laboratory on the west balcony directly to the reactor core.

(2) MUTR Facility Operating License Amendment No. 3, issued March 23, 1971, authorized operation of the MUTR with a new reactor console and TRIGA Mark III control and instrumentation system as a replacement for the existing reactor console and control and instrumentation system in the reactor. Construction Permit No. CPRR–108, issued March 25, 1970, authorized the modifications.

(3) MUTR Facility Operating License Amendment No. 4, issued February 22, 1974, authorized operation of the MUTR with a TRIGA-type core at steady-state power levels up to 250 kWt. The MUTR achieved criticality on June 18, 1974, for the first time with the TRIGA-type core.

(4) From 1992 through 1993, the primary coolant system filter cartridge was reconfigured and the heat exchanger was upgraded to 300 kWt heat removal capacity.

(5) In 1993, additional displays for the coolant purification system and area radiation monitors were added to the reactor console.

(6) From 1998 through 1999, the licensee modified and improved the MUTR radioactive water handling systems. A secondary heat exchanger was removed from service, the sump system was rebuilt and waterproofed, the holdup tank and piping were replaced, and particle filters were added to the sump discharge. The licensee indicated in its 1999 annual report (Ref. 79) that additional instrumentation displays for confinement status and pool water conductivity were added, and others were rearranged on the reactor console to improve their visibility to the reactor operators.

The staff's review in support of the LRA found that most modifications to the MUTR involved technological upgrades to instrumentation and minor changes to the existing design that either

enhanced its capability or improved reactor operations. All of these modifications were subject to evaluation under 10 CFR 50.59, "Changes, tests, and experiments," to ensure there was no adverse impact on the safety of the MUTR. The NRC staff concludes that all changes appear to be reasonable and the licensing actions taken over the years seem appropriate. Furthermore, the licensee did not request any substantive facility changes as part of this LRA.

1.9 Financial Considerations

1.9.1 Financial Ability To Operate the Reactor

The regulation, 10 CFR 50.33(f) states:

> Except for an electric utility applicant for a license to operate a utilization facility of the type described in § 50.21(b) or § 50.22, [an application shall state] information sufficient to demonstrate to the Commission the financial qualification of the applicant to carry out, in accordance with regulations of this chapter, the activities for which the permit or license is sought.

The licensee does not qualify as an "electric utility," as defined in 10 CFR 50.2, "Definitions." Furthermore, 10 CFR 50.33(f)(2) states "[A]pplicants to renew or extend the term of an operating license for a non-power reactor shall include the financial information that is required in an application for an initial license."

The NRC staff has determined that the licensee must meet the financial qualification requirements pursuant to 10 CFR 50.33(f) and is subject to a full financial qualification review. The licensee must provide information to demonstrate that it possesses or has reasonable assurance of obtaining the funds necessary to cover estimated operating costs for the period of the license. Therefore, the licensee must submit estimates of the total annual operating costs for each of the first 5 years of facility operations from the expected license renewal date and indicate the source(s) of funds to cover those costs.

In a supplement to the application dated November 25, 2014 (Ref. 40), the licensee submitted its projected operating costs for the MUTR for each of the fiscal years 2015 through 2019. The licensee estimated the projected operating costs for the MUTR to range from $371,916 in fiscal year 2015 to $413,740 in fiscal year 2019. Funds to cover operating costs will come from the State of Maryland; Federal funding; and fees received from corporations and other entities for the provision of services that use the MUTR, the cobalt-60 irradiator, or the electron beam accelerator (the cobalt-60 irradiator and electron beam accelerator are facilities that are not part of the reactor license). Since UMD is part of a State institution and receives the majority of its funding from the State of Maryland, the presumption that adequate funds to safely operate the facility exists. The NRC staff reviewed the licensee's estimated operating costs and projected sources of funds to cover those costs and finds them to be reasonable.

MUTR is currently licensed as a facility that is useful in research and development under Section 104.c of the AEA, 42 U.S.C. §2234(c). The regulation in 10 CFR 50.21(c) provides for issuance of a license to a facility which is useful in the conduct of research and development activities if no more than 50 percent of the annual cost of owning and operating the facility is devoted to production of materials, products, or the sale of services, other than research and development or education or training. The MUTR facility was originally licensed by NRC as a non-commercial facility in 1960 and continues as an academic, non-commercial facility. In a conversation of record (Ref. 100), MUTR provided financial information that less than

50 percent of the operating costs are devoted to commercial activities. Because 10 CFR 50.21(c) requires that the majority of reactor operating costs be funded by non-commercial uses and MUTR has no operating costs devoted to commercial activities, the NRC staff concludes that the licensee can be renewed as a Section 104.c license.

The NRC staff finds that the licensee has demonstrated reasonable assurance of obtaining the necessary funds to cover the estimated facility operation costs for the renewed operating license period. Accordingly, the NRC staff finds that the licensee has met the financial qualification requirements under 10 CFR 50.33(f) and is financially qualified to engage in the proposed activities at the MUTR facility.

1.9.2 Financial Ability To Decommission the Facility

The regulations in 10 CFR 50.33(k)(1) states "[A]n application for an operating license…for a production or utilization facility, [must provide] information in the form of a report, as described in § 50.75, indicating how reasonable assurance will be provided that funds will be available to decommission the facility."

The regulations in 10 CFR 50.75(d)(1) require that "[E]ach non-power reactor applicant for or holder of an operating license for a production or utilization facility shall submit a decommissioning report as required by § 50.33(k) of this part." The decommissioning report must contain a cost estimate for decommissioning the facility, the funding method(s) to be used to provide funding assurance for decommissioning, and a description of the means for adjusting the cost estimate and associated funding level periodically over the life of the facility. The acceptable methods for providing the financial assurance for decommissioning are specified in 10 CFR 50.75(e)(1).

By letter dated April 27, 2000 (Ref. 80), and the LRA (Ref. 1), the licensee referenced a decommissioning cost estimate for the MUTR in the amount of $2,165,272 in 2000 dollars. In a letter dated November 25, 2014 (Ref. 40), the licensee updated its decommissioning cost estimate to $12,939,640 in 2015 dollars. According to the licensee, its decommissioning cost estimate is based on the decommissioning of the Diamond Ordnance Reactor Facility that was located in Maryland in 1980, adjusted using the implicit price deflator for the gross domestic product, and on a comparison of the MUTR with other university reactors. The 2015 decommissioning cost estimate for the MUTR summarized costs under the categories of insurance, director, manager and other staff, security, communications, and other miscellaneous expenses; external contract for decommissioning the facility, outside consultant site characterization and site preparation, ALARA allowance, total dismantling, packaging and shipping of waste, final reports and surveys, and a 25 percent contingency factor. According to the licensee, in part, it will adjust the decommissioning cost estimate at five year intervals using the methodology proposed in 10 CFR 50.75(c)(2), based on factors in the most recent version of NUREG-1307, "Report on Waste Burial Charges," Rev. 13, and the United States Department of Labor-Bureau of Labor Statistics for labor, energy and waste burial. The NRC staff reviewed the information provided by the licensee on MUTR decommissioning and concludes that the decommissioning approach and decommissioning cost estimate are reasonable.

The licensee has elected to use a statement of intent (SOI) to provide financial assurance, as allowed by 10 CFR 50.75(e)(1)(iv) for a Federal, State, or local government licensee. The SOI must contain or reference a cost estimate for decommissioning and indicate that funds for decommissioning will be obtained when necessary.

The licensee provided an SOI, dated May 27, 2010 (Ref. 59), as updated by letter dated November 25, 2014 (Ref. 40), stating, in part, that the signatory "…intend[s] to request that funds be made available when necessary to cover the cost to decommission the Maryland University Training Reactor…" and "…intend[s] to request and obtain these funds sufficiently in advance of decommissioning to prevent delay of directed operations."

To support the SOI and UMD's qualifications to use a SOI, the application stated that UMD is a constituent institution of the University System of Maryland and an agency of the State of Maryland and included documentation that corroborates this statement. The application also provided information supporting UMD's representation that its decommissioning funding obligations are backed by the full faith and credit of the State of Maryland. The University of Maryland also provided documentation confirming that Mr. Carlo Colella, UMD Vice President for Administration and Finance, the signatory of the SOI, is authorized to execute contracts on behalf of the university.

The NRC staff reviewed the licensee's information on decommissioning funding assurance as described above and, under 10 CFR 50.75(e)(1)(iv), finds that the licensee is a State of Maryland government licensee, the SOI is acceptable to provide financial assurance, the decommissioning cost estimate is reasonable, and the licensee's means of adjusting the cost estimate and associated funding level periodically over the life of the facility is reasonable to indicate that funds will be obtained when necessary. The NRC staff notes that any adjustment of the decommissioning cost estimate should incorporate, among other things, changes in costs resulting from the availability of disposal facilities, consistent with the requirement in 10 CFR 50.9, "Completeness and accuracy of information," to update any changes in the projected cost, including changes in costs resulting from increased disposal options.

1.9.3 Foreign Ownership, Control, or Domination

Section 104d of the AEA, as amended prohibits the NRC from issuing a license under AEA Section 104 to "any corporation or other entity if the Commission knows or has reason to believe it is owned, controlled, or dominated by an alien, a foreign corporation, or a foreign government." The NRC regulations in 10 CFR 50.38, "Ineligibility of certain applicants," similarly state this prohibition. According to the application, the licensee is a State of Maryland government entity and is not owned, controlled, or dominated by an alien, a foreign corporation, or a foreign government. The NRC staff does not know or have reason to believe that the licensee is foreign owned, controlled, or dominated.

1.9.4 Nuclear Indemnity

The NRC staff notes that UMD currently has an indemnity agreement with the Commission, which does not have a termination date. Therefore, the licensee will continue to be a party to the present indemnity agreement following issuance of the renewed license. Under 10 CFR 140.71, "Scope," the licensee, as a nonprofit educational institution, is not required to provide nuclear liability insurance. The Commission will indemnify the licensee for any claims arising out of a nuclear accident under the Price-Anderson Act, Section 170 of the AEA, as amended and in accordance with the provisions under its indemnity agreement pursuant to 10 CFR 140.95, "Appendix E—Form of Indemnity Agreement with Nonprofit Educational Institutions," above $250 thousand and up to $500 million. Also, because the licensee is not a power reactor, it is not required to purchase property insurance under 10 CFR 50.54(w).

1.9.5 Financial Consideration Conclusions

The NRC staff reviewed the financial status of the licensee and concludes that there is reasonable assurance that the necessary funds will be available to support the continued safe operation of the MUTR and, when necessary, to shut down the facility and carry out decommissioning activities. In addition, the NRC staff concludes there are no foreign ownership, control, or domination issues or insurance and indemnity issues that would prevent the issuance of a renewed license.

1.10 Facility Operating License Possession Limits and License Changes Considerations

The renewal of the Facility Operating License No. R-70, for the UMD MUTR authorizes the receipt, possession, and use of special nuclear and byproduct materials. SNM consists of such material as the U-235 in the reactor fuel and fueled experiments, and SNM in fission chambers, fission plates, foils, solutions, and SNM produced by operation of the reactor. Byproduct material consists of such material as activation and fission products in the fuel and fueled experiments, and activation products in experiments and reactor structure that may be produced by operation of the reactor. All licensed activates involving SNM and byproduct material conducted by UMD will be completed at the MUTR facility defined by TS 5.1 “Site Characteristics.”

The current amended MUTR facility operating license contains a license condition (LC) that controls the receipt, possession, and use SNM in accordance with 10 CFR Part 70. The NRC staff reviewed this LC and finds it does not include allowances for SNM in the form of detectors, fission plates, foils, or solutions, and the format used is out of date. In response to RAI No. 1 (Ref. 96), the licensee requested a LC that includes an allowance of 15 grams of SNM, of any enrichment, in the form of detectors, fission plates, foils, and solutions.

By letter dated November 1, 2016 (Ref. 93), the licensee requested an amendment to the MUTR facility operating license to increase the SNM possession limit in the form of TRIGA fuel. This would allow the DOE to supply fuel that had been lightly irradiated in other research reactors to UMD. The MUTR is facing constrained operation because of the decreasing excess reactivity. In response to RAI Nos. 1 and 2 (Ref. 97), the licensee confirmed that the SNM possession limit increase be reviewed and evaluated as part of the license renewal, and provided nomenclature to identify the additional fuel as possession-only in LC 2.B.(2)b. In response to RAI No. 3b (Ref. 97), the licensee updated the LC 2.B.(2)e to include SNM that may have been produced in other facilities.

A description of the UMD’s MUTR facility operating license LCs that were revised are as follows:

LC 2.B.(2) currently states the following:

> Pursuant to the Act and 10 CFR Part 70, “Domestic Licensing of Special Nuclear Material,” to receive, possess, and use up to 3,441 grams of uranium–235 contained in enriched uranium, and 80 grams of plutonium contained in encapsulated plutonium beryllium sources for use in connection with operation of the reactor; and

LC 2.B.(2) is revised to state the following:

> Pursuant to the Act and 10 CFR Part 70, the following activities are included:
>
> a. to receive, possess, and use, but not separate, in connection with the operation of the facility, up to 3,441 grams of contained uranium–235 enriched to less than 20 percent in the form of TRIGA-type reactor fuel;
>
> b. to receive, possess, but not use, and not separate, in connection with the operation of the facility, up to 1,060 grams of contained uranium–235 enriched to less than 20 percent in the form of “Alternate Reactor Fuel” TRIGA-type reactor fuel;
>
> c. to receive, possess, and use, but not separate, in connection with the operation of the facility, up to 15 grams of special nuclear material, of any enrichment, in the form of detectors, fission plates, foils, and solutions;
>
> d. to receive, possess, and use, but not separate, in connection with the operation of the facility, up to 80 grams of plutonium contained in encapsulated plutonium-beryllium neutron sources;
>
> e. to receive, possess, and use, but not separate, in connection with the operation of the facility, such special nuclear material as may be produced by the operation of the facility; and
>
> f. to receive, possess, but not use, and not separate, in connection with the operation of the facility, such special nuclear material as may be produced by the operation of other facilities in the form of “Alternate Reactor Fuel.”

The current amended MUTR facility operating license contains a LC that controls the receipt, possession, and use of byproduct material in accordance with 10 CFR Part 30. The NRC staff reviewed this LC and finds it does not include allowances for byproduct material produced in reactors other than the MUTR, and the format used is out of date. By letter dated November 1, 2016 (Ref. 93), the licensee requested an amendment to the MUTR facility operating license to increase the SNM possession limit in the form of TRIGA fuel. In response to RAI No. 3a (Ref. 97), the licensee updated LC 2.B.(3) to include byproduct material that may have been produced in other facilities.

LC 2.B.(3) currently states the following:

> Pursuant to the Act and 10 CFR Part 30, "Rules of General Applicability to Domestic Licensing of Byproduct Material," to possess, but not to separate, such byproduct materials as may be produced by operation of the facility.

LC 2.B.(3) is revised to state the following:

> Pursuant to the Act and 10 CFR Part 30, "Rules of General Applicability to Domestic Licensing of Byproduct Material," the following activities are included:
>
> a. to receive, possess, and use in connection with operation of the facility, such byproduct material as may be produced by operation of the facility, which cannot be separated except for byproduct material produced in non-fueled reactor experiments.

b. to receive, possess, but not use, and not separate, in connection with operation of the facility, such byproduct materials as may be produced by operation of other facilities in the form of “Alternate Reactor Fuel.”

The NRC staff reviewed the types, quantities, and forms of SNM and byproduct material contained in the LCs. The NRC staff finds that the increased possession limits do not impact the security or emergency plan, and the licensee has a radiation protection program in place to safety receive, possess and use the materials authorized by the facility operating license. The NRC staff concludes these are reasonable quantities and there is adequate protection of them to support the operation of the MUTR.

2 REACTOR DESCRIPTION

2.1 Summary Description

The safety analysis report (SAR), Section 4.1, describes the Maryland University Training Reactor (MUTR) as a natural convection, water-cooled, moderated, and shielded reactor that was converted to the use of Training, Research, Isotopes, General Atomics (TRIGA) fuel. The MUTR design is similar to many other research reactors operating in the United States. The MUTR was originally designed for plate materials testing reactor (MTR)-type fuel assemblies but was converted to the use of TRIGA fuel elements contained in bundles (III-A-type fitting) that can hold up to four TRIGA-type fuel elements and are designed to fit on an MTR-type grid plate. The low-enriched uranium (LEU) TRIGA fuel is in the form of an uranium-zirconium hydride ($U\text{-}ZrH_x$). (The "x" in the $U\text{-}ZrH_x$ nomenclature represents the hydrogen (H) to zirconium (Zr) stoichiometric ratio.) The reactor is presently fueled with TRIGA-type $U\text{-}ZrH_{1.7}$ solid fuel-moderator elements containing 8.5 weight percent (w%) uranium (U) enriched to less than 20 percent isotopic enrichment of U-235, and 1.7 indicates the H-to-Zr ratio in the Zr matrix. The fuel is clad in stainless steel. A series of General Atomics (GA) and U.S. Nuclear Regulatory Commission (NRC) reports discuss reactor behavior (GA-7882, "Kinetic Behavior of TRIGA Reactors," dated March 31, 1967 (Ref. 36)); fission product retention (NUREG-1282, "Safety Evaluation Report on High-Uranium Content, Low-Enriched Uranium-Zirconium Hydride Fuels for TRIGA Reactors," dated August 31, 1987 (Ref. 37); GA-4314/E-117-833, "The $U\text{-}ZrH_x$ Alloy: Its Properties and Use in TRIGA Fuel," issued February 1980 (Ref. 31)); and accident analysis (NUREG/CR-2387, "Credible Accident Analyses for TRIGA and TRIGA-Fueled Reactors," issued April 1982 (Ref. 33); GA-A16287, "Fission Product Release from TRIGA-LEU Fuels," GA-A16287, issued October 1980 (Ref. 35)).

The MUTR contains a graphite reflector on one side of the core and a thermal column on another, as shown in Figure 2-1 of this safety evaluation report (SER). The reactor contains five experimental facilities used to provide external beams of neutrons and gamma rays. They are also used to enable in-core irradiation of small samples using the pneumatic transfer system (PTS) (the samples are carried into the core in samples holders called "rabbits"). The reactor core is supported off the floor of the reactor tank on a 9-by-5 grid. These grid positions can be filled with fuel bundles, control rods, graphite reflectors, or other nonfuel elements. The grid is supported by a frame attached to the pool floor.

The reactor core is located at the bottom of a water-filled, aluminum tank, supported by a concrete pool that acts as a biological shield. Steel plates, water, and concrete provide the radial biological shielding for the reactor. About 6.1 meters (m) (20 feet (ft)) of water serves as shielding above the core. The core uses three control rods of identical construction, two motor-driven shim-safety rods and one motor-driven regulating rod. The shim-safety rods provide scram capability and the regulating rod is used to maintain reactor power during normal operations.

The MUTR is licensed to operate at a maximum thermal power level of 250 kilowatts (kWt) and does not have pulsing capability. The reactor core is cooled through natural convection of the pool water. A cooling system is available to remove heat from the coolant in the reactor pool.

Extensive experience gained from similar designs used throughout the world demonstrates the safety of TRIGA reactors. Stainless steel clad TRIGA fuel is characterized by high fission product retention and the ability to withstand water quenching at temperatures as high as

1,150 degrees Celsius (°C) (2,100 degrees Fahrenheit (°F)). The safety of the fuel arises from the strongly negative prompt temperature coefficient characteristic of U-ZrH_x fuel-moderator elements. As the fuel temperature rises, this coefficient immediately compensates for reactivity insertions that would cause the reactor power and fuel temperature to increase. The MUTR fuel temperature safety limit (SL) in Technical Specification (TS) 2.1 "Safety Limit," is specified not to exceed 1,000 °C (1,832 °F) under any conditions of operation. To ensure that this SL is not exceeded, TS 2.2 establishes the fuel temperature limiting safety system setting (LSSS) for steady-state operation to be less than or equal to 175 °C (347 °F) as measured in the instrumented fuel element (IFE) located in specific locations of the core. (Section 2.5.3 of this SER discusses the SL and LSSS.)

2.2 Reactor Core

SAR Section 4.2 (Ref. 1), as supplemented by the licensee's responses to requests for additional information (RAIs) (Refs. 16, 21, and 58), describes the MUTR core. The MUTR uses solid fuel elements in which the zirconium hydride (ZrH) moderator is homogeneously combined with LEU fuel. The single fuel elements are held in a rectangular array by adapters, referred to as fuel bundles that are inserted into the bottom reactor grid plate. The core consists of a lattice of 93 cylindrical U-ZrH_x fuel-moderator elements assembled into up to four-element bundles for a total of 24 fuel bundles. Twenty four-element fuel bundles contain four fuel elements, and one four–element fuel bundle contains three fuel elements and an IFE. The three remaining bundles are three-element fuel bundles that contain three fuel elements and a control rod guide tube. The grid plate contains a 9-by-5 array of holes that can accommodate either fuel bundles or graphite reflector assemblies. The fueled region of the reactor core forms a rectangular, parallelepiped geometry, which occupies a 6-by-4 array on the grid plate, with one bundle displaced for the in-core pneumatic experimental system. Graphite slugs incorporated into the individual fuel elements provide top and bottom axial neutron reflection. Two graphite reflector elements are positioned in the assembled core, adjacent to two of the outer fuel assemblies, as shown in Figure 2-1 of this SER. The figure also shows the positions for the startup source, the "rabbit" hole for the PTS in-core irradiations, and the locations for fission chamber and ion chamber instrumentation for monitoring the reactor power level.

The reactor core is cooled by natural convection of the primary reactor water, which also serves as reflector and moderator and provides radiation shielding for the MUTR staff. The primary reactor water is monitored for conductivity and radioactivity to ensure that the primary fission product barrier, the TRIGA fuel cladding, remains effective to prevent a release of fission products.

The reactor is used as a training tool, and as a source of neutrons for activation studies and a source of neutron and gamma radiation for studies of effects on materials. The experimental facilities are designed to permit neutron and gamma radiation fields to interact with materials external to the reactor core as well as to permit sample irradiations in the core. The fixed experimental facilities consist of a thermal column, two beam tubes, a through tube, and a PTS.

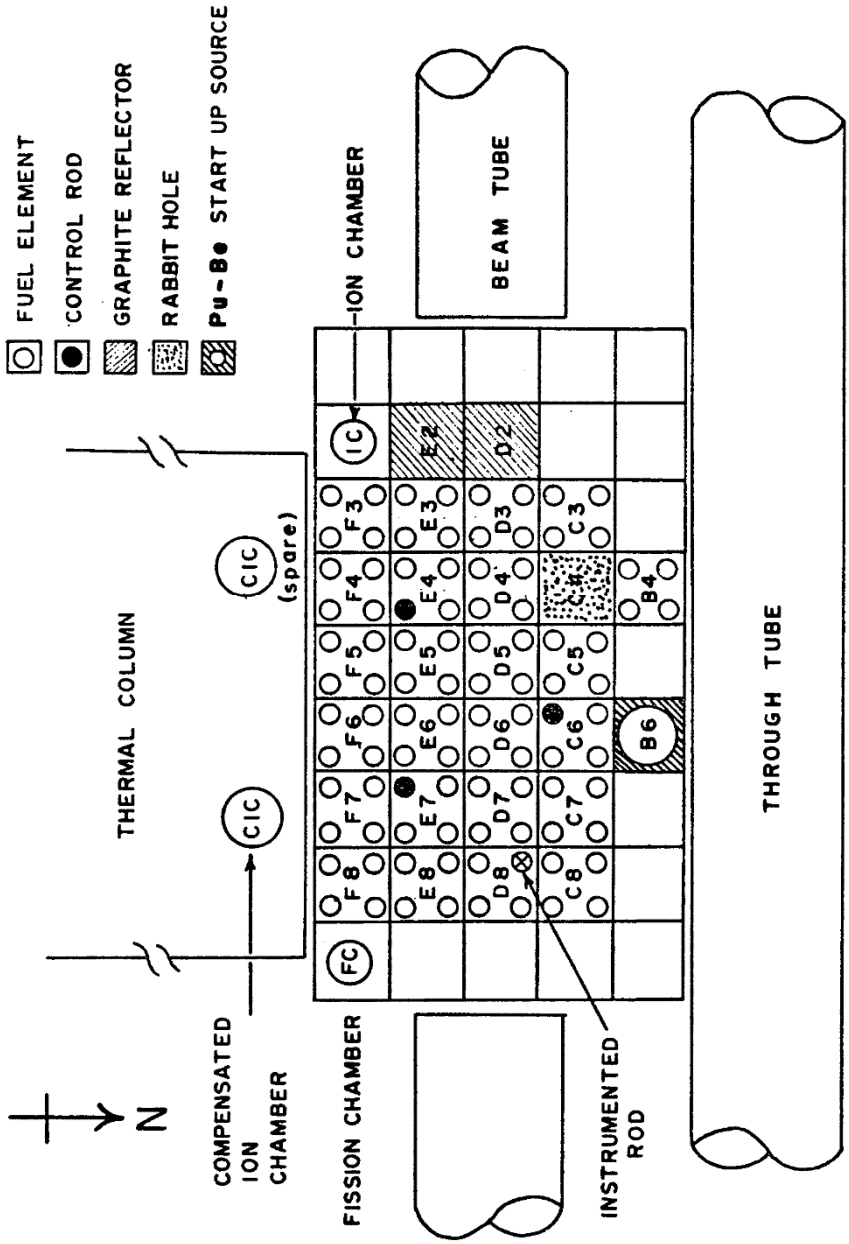

Figure 2-1 MUTR TRIGA fuel and reactor grid plate configuration

TS 1.3, “Definitions - Core Configuration,” states the following:

> The core consists of 24 fuel bundles, with a total of 93 fuel elements, arranged in a rectangular array with one bundle displaced for the pneumatic experimental system; three CONTROL RODS; and two graphite reflectors.

TS 1.3, “Definitions - Core Configuration,” provides a description of the MUTR core, fuel elements, control rods and graphite reflectors. The NRC staff reviewed the TS 1.3 definition of Core Configuration and finds that it is consistent with the core described in the SAR, and used in the supporting thermal-hydraulic (T-H) and neutronic analyses. Based on the information provided above, the NRC staff concludes that the TS 1.3 definition of Core Configuration is acceptable.

TS 5.3, “Reactor Core and Fuel,” states the following:

<u>Specifications</u>

1. The core shall consist of 93 TRIGA fuel elements assembled into 24 fuel bundles, 21 bundles shall contain four fuel elements and 3 bundles shall contain three fuel elements and a CONTROL ROD guide tube.

2. The fuel bundles shall be arranged in a rectangular 4 x 6 configuration, with one bundle displaced for the in-core pneumatic experimental system.

3. The reactor shall not be operated at power levels exceeding 250 kW.

4. The reflector shall be a combination of two graphite reflectors.

TS 5.3, Specification 1, limits the MUTR core configuration to an arrangement of 93 TRIGA fuel elements, assembled into 24 fuel bundles, with 21 bundles containing four fuel elements and 3 bundles containing three fuel elements and a control rod guide tube. The NRC staff reviewed TS 5.3, Specification 1, and finds it helps ensure that only TRIGA fuel elements are authorized for use in the MUTR in the configuration described above. The NRC staff also finds that the MUTR core configuration described by TS 5.3, Specification 1, is consistent with the core configuration analyzed in the SAR. Based on the information provided above, the NRC staff concludes that the TS 5.3, Specification 1, is acceptable.

TS 5.3, Specification 2, limits the MUTR core configuration of the fuel bundles to be arranged in a rectangular 4 x 6 configuration, with one bundle displaced for the in-core pneumatic experimental system. The NRC staff reviewed TS 5.3, Specification 2, and finds that it helps ensure that the core fuel arrangement is closely-packed such that there are no open internal positions except as identified (i.e., in-core PTS). The NRC staff finds that TS 5.3, Specification 2, provides that internal core lattice positions are occupied with fuel elements to help reduce the probability of an accidental reactivity insertion at multiple lattice locations (Section 2.5.1 of this SER provides further discussion of excess reactivity, and Section 4.2.1 further discusses reactivity addition accidents). Based on the information provided above, the NRC staff concludes that the TS 5.3, Specification 2, is acceptable.

TS 5.3, Specification 3, limits the operation of the MUTR to a steady-state power limit of 250 kWt. The NRC staff reviewed TS 5.3, Specification 3, and finds that, helps to ensure that the operation of the MUTR is consistent with the limit in the facility operating license, and with

the T-H analyses, which indicates that, at the steady-state power level of 250 kWt, and with a reactor bulk pool water temperature of 90°C (194°F), the corresponding peak fuel temperature is 233°C (450°F), and well below the SL of 1,000°C (1,832°F). The NRC staff reviewed this information and finds that TS 5.3, Specification 3, is consistent with the guidance in Appendix 14.1 to NUREG-1537, "Guidelines for Preparing and Reviewing Applications for the Licensing of Non-Power Reactors," issued February 1996 (Ref. 23). Furthermore, TS 3.2, "Reactor Control and Safety Systems," Specification 3, Table 3.1 (Table 2-2 in this SER), specifies that a reactor scram would occur at a power level of 300 kWt, which is 120 percent of the steady-state power. The licensee performed T-H calculations for the MUTR that indicate that, at the steady-state power level of 300 kWt with a 90 °C (194 °F) reactor pool temperature, the corresponding peak fuel temperature is 252 °C (484 °F), with a departure from nucleate boiling ratio (DNBR) of 5.92. The NRC staff finds that these parameters are consistent with the guidance in NUREG-1537. The NRC staff reviewed the information provided and finds that TS 3.2, Specification 3, is consistent with the guidance in NUREG-1537, Appendix 14.1, Section 2, and that the requirement in TS 5.3, Specification 3, requires that the reactor power will not exceed 250 kWt during steady-state operation. (Section 2.6 of this SER provides further discussion of the T-H design, and Table 2-4 of this SER shows the NRC staff's confirmatory DNBR calculation results). Based on the information provided above, the NRC staff concludes that the TS 5.3, Specification 3, is acceptable.

TS 5.3, Specification 4, limits the core configuration to two graphite reflector blocks. Two graphite reflectors are used to fill the grid positions not occupied by fuel bundles, control rods, or other core components. The reflectors are rectangular aluminum cans filled with graphite as high and wide as a fuel bundle. The top handle and grid plate adapter are of the same dimensions as the four element fuel bundles. The NRC staff reviewed TS 5.3, Specification 4, and finds that it helps to reduce the MUTR core neutron leakage and ensures the core configuration is consistent with the neutronic analysis used to determine the flux profile (see Section 2.2.2 of this SER for additional discussion of the reflectors). Based on the information provided above, the NRC staff concludes that the TS 5.3, Specification 4, is acceptable.

The NRC staff finds that TS 5.3, Specifications 1 through 4, characterize the MUTR design features for the reactor core and help ensure that the core configuration is consistent with the core analyzed in the SAR, as supplemented. The NRC staff also finds that TS 5.3 is consistent with the guidance in NUREG-1537. Based on the information provided above, the NRC staff concludes that TS 5.3, Specifications 1 through 4, are acceptable.

2.2.1 Reactor Fuel

The GA report, GA-4314 (Ref. 31) describes the development and use of TRIGA U-ZrH_x fuels beginning in 1957. The TRIGA U-ZrH_x fuel has unique safety features, including a large negative prompt temperature coefficient of reactivity such that, if excess reactivity were suddenly inserted into the core, the resulting fuel temperature increase would tend to limit the power excursion. These safety features also include high fission product retention and chemical stability when quenched from high temperatures in water and dimensional stability over a wide range of temperatures. Experiments performed in the late 1950s confirmed that the ZrH_x fuel possessed the basic mechanism needed to produce these desired characteristics.

SAR Section 4.2.1 (Ref. 1), as supplemented by responses to RAIs (Refs. 8, 11, 15, 21, 55, 56, and 58), describes the reactor fuel. A ZrH neutron moderator is homogeneously combined with partially enriched U fuel. The stainless-steel-clad fuel contains 8.5 w% U, enriched to slightly less than 20 percent in U-235. In response to RAI Nos. 59, 60, and 61 on the insertion of

reactivity accident, the licensee provided models to benchmark fuel enrichments (Ref. 11). The atomic ratio of H to Zr of the fuel-moderator material is a nominal 1.7 to 1. To facilitate hydriding, a 4.6 millimeter (mm) (0.18 inch (in)) diameter hole is drilled through the center of the active fuel section. After hydriding is complete, a Zr rod is inserted in the hole.

The fuel section of each element is approximately 15 in (38 centimeters (cm)) long and 1.38 in (3.5 cm) in diameter. Graphite end plugs that are 3.4 in (8.6 cm) long are located above and below the fuel region and serve as neutron reflectors. The fuel and graphite are contained in a 0.02 in (0.51 mm) thick Type 304 stainless-steel jacket (cladding) that is welded to top and bottom stainless-steel end fittings. Each element is approximately 35 in (88.9 cm) long. The TRIGA conversion fuel elements are nearly identical to standard TRIGA fuel elements, except that they are fabricated with slightly smaller diameter, 1.41 in (3.58 cm), to maintain the proper metal-to-water ratio in the core in the four-element bundle geometry. Individual fuel elements are identified by serial numbers scribed on the top end of the fixtures or spacer blocks. The top and bottom fuel element end fittings have been modified to fit into a bundle that is inserted into the existing MTR-type grid plate.

SAR Section 4.2.1 indicates that the four-element fuel bundle was developed to allow conversion of MTR-type reactors to TRIGA-fueled reactors (Figure 2-2). Each bundle consists of an aluminum bottom adapter, four fuel elements, and an aluminum top handle. The top side of the bottom adapter contains four threaded holes and mates with the threaded bottom fitting of the fuel elements. The lower side of the bottom adapter is designed to fit into and rest on the bottom grid plate. The aluminum top handle of the bundle serves as a lifting fixture and a spacer for the top ends of the individual fuel elements. To accommodate thermal expansion, a sliding fit is provided between the top handle and the fuel element top fitting. A stainless-steel locking plate fastens the top handle to the fuel elements.

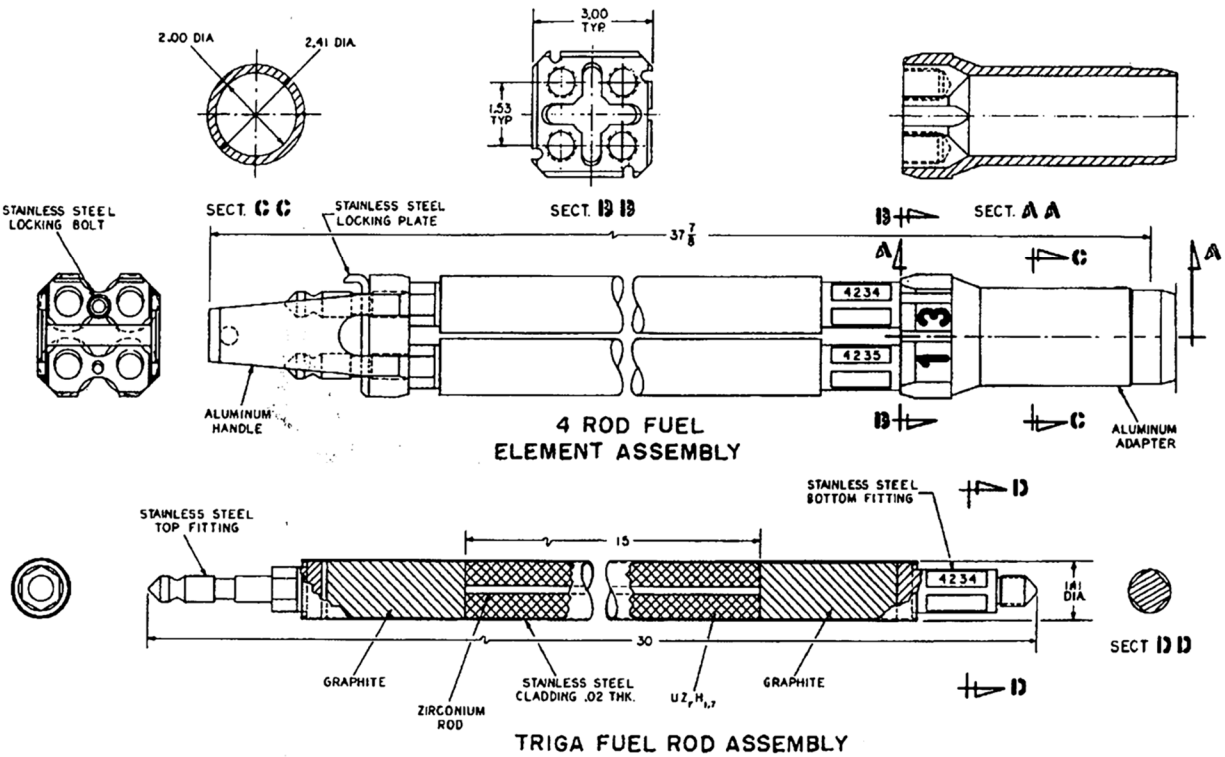

Figure 2-2 TRIGA fuel element (TRIGA fuel rod assembly) and bundle element assembly, SAR Figure 4.1 (dimensions in inches)

The MUTR uses 20 four-element fuel bundles, 3 three-element fuel bundles with control rod guide tubes, and 1 four-element fuel bundle that contains an IFE. Figure 2-3 below illustrates the IFE. A modified top handle and locking plate is used with this bundle to allow the removal of the IFE without removing the bundle from the core. The IFE is identical in all respects to the normal fuel element except that it has three thermocouples inserted during fabrication. The thermocouples are located near the vertical centerline, at the axial center of the fuel section and 2.5 cm (0.39 in.) above and below the center. These thermocouples monitor the fuel element temperatures and provide a scram signal at 175 °C (347 °F).

The three-element fuel bundles with control rod guide tubes resemble the four-element bundles. To accommodate a control rod, one fuel element is replaced with a control rod guide tube. Similar to the fuel element, the guide tube threads into the bottom adapter, and, like the bundle that contains the IFE, the top handle and locking plate are modified to facilitate guide tube removal and are designed to mate with the bottom end fitting in the same fashion.

In response to RAI No. 1.e.ii (Ref. 56), the licensee stated that the grid plate positions and other holes that do not contain fuel, detectors, the startup source, reflectors, or the pneumatic irradiation port are open to flow during normal operation.

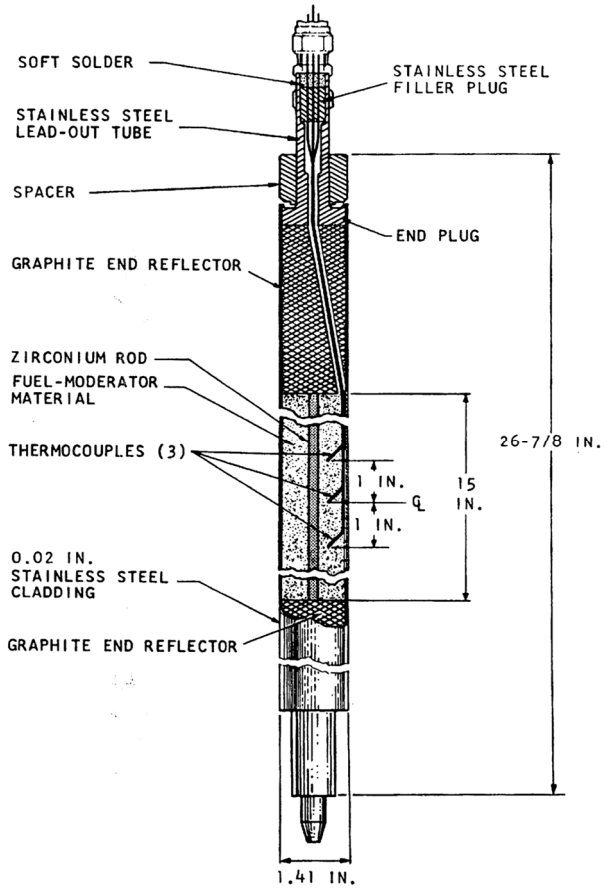

Figure 2-3 Instrumented TRIGA fuel element, SAR Figure 4.2

TS 5.3.1, "Reactor Fuel," states the following:

<u>Specifications</u>

The individual unirradiated standard TRIGA fuel elements shall have the following characteristics:

1. Uranium content: a maximum of 9.0% weight uranium enriched to less than 20% ^{235}U.

2. Zirconium hydride atom ratio: nominal 1.5 - 1.7 hydrogen-to-zirconium, ZrHx.

3. Cladding: 304 stainless steel, nominal thickness of 0.508 mm (.020 in).

4. The overall length of a FUEL ELEMENT shall be 30 inches, and the fueled length shall be 15 inches.

TS 5.3.1, Specification 1, limits the uranium content of the TRIGA fuel to a maximum weight percent of 9.0 and to an enrichment of less than 20 percent U-235. The NRC staff reviewed and finds that TS 5.3.1, Specification 1, is consistent with the description provided in SAR Section 4.2.1, and with analyses described in Section 2.5 and 2.6 of this SER. The NRC staff also finds that TS 5.3.1, Specification 1, helps ensure that the fuel is limited to LEU. Based on

the information provided above, the NRC staff concludes that TS 5.3.1, Specification 1, is acceptable.

TS 5.3.1, Specification 2, limits the fuel stoichiometry to between 1.5 and 1.7. The NRC staff reviewed and finds that this specification helps to ensure that fuel is consistent with the basis for the selection of the SL in TS 2.1 and the LSSS in TS 2.2. SAR Section 4.2.1 describes the nominal stoichiometry of 1.7 for the MUTR fuel, which is used in the T-H analyses that support the thermal margin developed for the basis to TS 2.1 and TS 2.2. The H-to-Zr ratio influences the fuel element internal pressure during operation, which in turn influences the stress in the clad. The maximum H-to-Zr ratio of 1.7 is supported by analysis done by the fuel vendor, GA, as provided in the report GA-7882 (Ref. 36). Based on the information provided above, the NRC staff concludes that TS 5.3.1, Specification 2, is acceptable.

TS 5.3.1, Specification 3, specifies the cladding material and thickness to help ensure the structural integrity of the cladding, as analyzed in the SAR and used to establish the basis for the SL in TS 2.1. The NRC staff reviewed TS 5.3.1, Specification 3, and finds that it is consistent with the description of the fuel used in SAR Section 13.2.3. Based on the information provided above, the NRC staff concludes that TS 5.3.1, Specification 3, is acceptable.

TS 5.3.1, Specification 4, specifies the fuel geometry and portion of the fuel element containing U fuel, which is typical of standard TRIGA reactors. The NRC staff reviewed TS 5.3.1, Specification 4, and finds that it is consistent with the description of the fuel used in response to RAI No. 60 (Ref. 11). Based on the information provided above, the NRC staff concludes that TS 5.3.1, Specification 4, is acceptable.

In its response to RAI No. 69 (Ref. 8), the licensee stated that extensive operating history with this fuel type indicates that the low power levels and absence of pulsing capability in the MUTR, coupled with the low burnup and operating temperature, result in a minimal pressure rise for the fuel. In addition, since the fuel is cooled by natural convection, there is no high-velocity water flow that would cause vibration induced fretting and fatigue of the fuel elements.

TS 5.3.1, Specifications 1 through 4, help ensure that important design features of the MUTR fuel are maintained as described in the SAR. The NRC staff reviewed TS 5.3.1, Specifications 1 through 4, and finds that TS 5.3.1 supports the basis for the SL in TS 2.1 and the LSSS in TS 2.2 and is consistent with GA-4314/E-117-833; the guidance in NUREG-1537, Part 2, Section 4.2.1 and Section 5.3 of American National Standards Institute/American Nuclear Society (ANSI/ANS)-15.1-2007, “The Development of Technical Specifications for Research Reactors” (Ref. 30). Based on the information provided above, the NRC staff concludes that TS 5.3.1, Specifications 1 through 4, are acceptable.

The NRC staff finds that fuel growth and deformation can occur during normal operations, as described in NUREG-1537 and GA-4314/E-117-833 (Ref. 31). Damage mechanisms include fission recoils and fission gases, both of which are strongly influenced by thermal gradients. Swelling of the fuel is dependent on the amount of time the fuel spends over a temperature threshold of about 750 °C (1,382 °F). In its response to RAI Nos. 2a and 2b (Ref. 16), the licensee provided T-H analysis that show that at 250 kWt, the current steady-state power level, a IFE operating temperature of about 175 °C (347 °F) corresponds to a maximum calculated fuel temperature of about 233 °C (451 °F), and swelling would be minimal, if present at all. The NRC staff reviewed the analysis provided by the licensee and concludes that there is reasonable assurance that fuel swelling at these temperatures, and by the mechanism described above, would be precluded.

TS 3.1, “Reactor Core Parameters,” states the following:

Specifications

(…)

4. The reactor shall not be operated with damaged fuel except to locate such fuel. Fuel shall be considered damaged if:

   (a) A cladding defect exists as indicated by release of fission products, or

   (b) A visual inspection reveals bulges, gross pitting or corrosion.

5. The burn-up of U-235 in the UZrH fuel matrix shall not exceed 50% of the initial concentration.

TS 3.1, Specifications 1 and 2, are evaluated and found acceptable in Section 2.5.1 of this SER.

TS 3.1, Specifications 3, is evaluated and found acceptable Sections 2.2.2 and 5.3.1 of this SER.

TS 3.1, Specification 4, helps ensure that the reactor is only operated with fuel that has an effective cladding barrier to the release of any potential fission products. In some cases, a cladding defect exists but is detectable only when the reactor is operating. In the unlikely event that a cladding defect is suspected (normally by a small increase in the concentration of radioactive material in the pool water or in the air), the licensee would only operate the reactor in order to locate the damaged fuel element. All operation would need to meet the regulatory requirements in Title 10 of the *Code of Federal Regulations* (10 CFR) Part 20, “Standards for Protection against Radiation” (Ref. 22), for releases of radioactive material and occupational and public doses (see SER Section 4.1.1 for mishandling or malfunction of fuel).

TS 3.1, Specification 5, establishes a burnup limit for the fuel. The NRC staff reviewed the specification and finds that TS 3.1, Specification 5, helps ensure that the fuel is not used past its burnup limit, as recommended in NUREG-1537.

The NRC staff reviewed TS 3.1, Specifications 4 and 5, and finds that these specifications limit reactor operations with damaged fuel and limit the fuel burnup. The NRC staff also finds that TS 3.1, Specifications 4 and 5, are consistent with the guidance in NUREG-1537. Based on the information provided above, the NRC staff concludes that TS 3.1, Specifications 4 and 5, are acceptable.

TS 4.1, “Reactor Core Parameters,” Specifications 4 and 5, states the following:

Specifications

(…)

4. A visual inspection of a representative group of fuel bundles from row C column 8,7,6,5,3 and row B column 4 shall be performed annually, at intervals not to exceed

15 months. If any are found to be damaged, an inspection of the entire MUTR core shall be performed.

5. Burnup shall be determined annually, not to exceed 15 months.

TS 4.1, Specifications 1 and 2, are evaluated and found acceptable in Section 2.5.1 of this SER.

TS 4.1, Specifications 3, is evaluated and found acceptable in Section 5.4.1 of this SER.

TS 4.1, Specification 4, specifies the frequency and methods for the inspection of the fuel. The guidance in NUREG-1537, Appendix 14.1, Section 4.1, recommends that, for non-pulsing TRIGA reactors, the fuel should be inspected and measured on at least a 5-year cycle so that approximately 20 percent of the fuel could be inspected and measured annually. The measurements involve placing fuel elements in special gauges that determine fuel element length and bend. In its response to RAI Nos. 4, 9, and 31 (Refs. 15, 55, and 96), the licensee provided justification for not inspecting and measuring all fuel elements in the core, or performing length and bend measurements. The NRC staff finds that because the MUTR facility does not pulse, does not use a forced circulation coolant system, has relatively low fuel burn up given the operating history, uses stainless steel fuel elements, the low risk of damage to instrumentation, and its current licensed power of only 250 kWt, that visually inspecting the fuel in grid plate locations listed in TS 4.1, Specification 4 would provide an adequate representative profile of all other fuel elements in the core. However, if an annual inspection identifies damaged fuel, then the entire core would be visually inspected for damage in accordance with TS 3.1 Specification 4. The NRC staff notes that to measure the fuel elements, the fuel bundles would need to be disassembled, which has never been undertaken because it presents risk of fuel and instrumentation damage. The NRC staff finds that TS 4.1, Specification 4, is a reasonable alternative to the guidance in NUREG-1537, Appendix 14.1, Section 4.1, and is acceptable.

TS 4.1, Specification 5, specifies an annual frequency to monitor fuel burnup. In response to RAI No. 69 (Ref. 8), the licensee stated that the average burnup is approximately 0.4 grams per year. The NRC staff reviewed TS 4.1, Specification 5, and finds that because of the low power level of the reactor, and relatively low reactor utilization, there is a predictable change in fuel burnup. The annual burnup estimate will help ensure that the fuel does not exceed 50 percent burnup limit in TS 3.1, Specification 5. The NRC staff finds that TS 4.1, Specification 5, is consistent with the guidance in NUREG-1537, Appendix 14.1, Section 4.1, and is acceptable.

TS 4.1, Specifications 4 and 5, provide surveillance intervals that help ensure fuel element integrity is maintained and any deterioration in cladding integrity can be detected. The NRC staff finds that TS 4.1, Specifications 5, is consistent with the guidance in NUREG-1537. TS 4.1, Specifications 4, has been determined to be a reasonable alternative to the guidance provided in NUREG-1537 and ANSI/ANS-15.1-2007. The NRC staff finds that the surveillance frequencies will help ensure the performance and operability of the fuel elements. Based on the information provided, the NRC staff concludes that TS 4.1, Specifications 4 and 5, are acceptable.

The NRC staff reviewed the SAR, the licensee's response to RAI No. 69 (Ref. 8), the licensee's annual reports (Refs. 50 through 54), and the NRC inspection reports (IRs) (Refs. 44 through 48). The NRC staff finds that the MUTR has used the same fuel since 1974, and the licensee adequately discussed the constituents, materials, and components for the fuel elements. Section 2 of the licensee's annual reports contains the annual fuel burnup values to

verify that total fuel burnup remains less than 50 percent. The NRC IRs show that fuel movements within the pool are controlled in accordance with TSs and administrative procedural requirements, and no damage to the fuel has occurred. The NRC staff also finds that compliance with the applicable TSs will help ensure uniform core operating characteristics and adherence to the design bases and safety-related requirements.

2.2.2 Control Rods

The licensee described the control rods in Sections 4.2.1.5, 4.2.2, and 7.3.3 of the SAR (Ref. 1), as supplemented by responses to RAIs (Refs. 7, 12, 15, and 55). The MUTR has used the same control rods since 1974, following the TRIGA conversion. Safety systems, drive motors, and control rods are supported by the reactor structure over the pool. The motors, gearboxes, electromagnets, switches, and wiring are all above the level of the reactor pool water and readily accessible for visual inspection, testing, and maintenance. The reactor pool and facility do not have any specific storage locations for control rods.

The MUTR uses three boron carbide (B_4C) control rods that are characteristic of most TRIGA-fueled reactors. The B_4C neutron absorbers are enclosed in aluminum tubes nominally 43 cm (17 in) long and 3.18 cm (1.25 in) in diameter with a poison section length of 38 cm (15 in). Two shim control rods and one regulating control rod control the MUTR power level. The reactor control system regulates control rod movement. The reactor operator manually controls two of the three control rods from the control console. The third rod can be controlled either manually or automatically by a control servo amplifier. The control rods are accommodated in the grid plate by replacing a fuel element with a control rod guide tube that has the same outside diameter and threaded bottom fitting as a fuel element. The upper aluminum handle and locking plate on a normal fuel bundle are modified to accommodate the control rod guide tubes, each of which is threaded into a connecting rod that extends from the core to the drive mechanism mounted on the reactor bridge support structure.

Each control rod drive mechanism consists of a synchronous, two-phase electric motor and a reduction gear driving a rack-and-pinion gear system. Each control rod drive system is energized from the control console through its own independent electrical cables and circuits to minimize the probability of multiple malfunctions of the drives. Each control rod has an individual electric-motor-driven control rod drive associated with it. The individual drives are mounted on the reactor bridge support structure. Each drive is capable of inserting and withdrawing the control rod at a slow constant rate for normal reactor operating power level adjustments. The normal operating speed on the drive mechanism is 48 cm per minute (19 in per minute). An electromagnet attaches the drive mechanism to the control rod by holding an iron armature in place that is threaded into the end of a connecting rod attached to the control rod. In the event of a reactor scram, the electromagnet is de-energized, which allows the control rod to drop freely into the core by gravity. The release time for the control rods is about 30 milliseconds. As described in SAR Section 4.2.2.3, a “dashpot” cushions the rod impact near the bottom of travel to prevent damage during a scram.

During normal operation, the electromagnet is energized and in contact with the armature, and the motorized system will insert or withdraw the control rod. Limit switches mounted on the drive assembly actuate circuits that indicate on the control console the up position of the magnet, the down position of the control rod, whether the magnet current is on, and if the magnet is in contact with the rod. A potentiometer connected to the pinion gear generates position-indication signals that are displayed on the control console.

Safety designs are an integral part of the reactor system. The control rod circuit is designed to limit withdraw or insertion of control rods as follows:

- An interlock prevents more than one control rod from being withdrawn at a time while in manual mode.

- Control rod withdrawal is prevented when the neutron count rate is less than that specified in TS 3.2, Specification 4.

- The regulating rod drive limit switch removes power from the control servo amplifier whenever a scram signal occurs.

- The regulating rod drive limit switch removes power from the control servo amplifier whenever the rod drives to its down limit (in lamp) or drives to its upper limit (out lamp).

- The beam port and through tube shield plugs are interlocked with the console electrical power. The plug interlocks de-energizes rod control power, unless it is physically bypassed.

The regulating rod may be used for automatic control of steady-state power at a preset level or for bringing the reactor to power on a preset period. The licensee's response to RAI No. 26 (Ref. 55) stated that simultaneous insertion and withdraw of control rods is standard practice when conducting a flux balance.

The NRC staff evaluated SAR Sections 4.2.2 and 7.3.3 and the licensee's responses to RAI Nos. 26 and 27 against the acceptance guidance in NUREG-1537, Sections 4.2.2 and 7.3.3, and finds that the licensee has described the materials, components, and fabrication specifications and that the manual and automatic control, display, rod release, and interlocks of the control rod systems will perform their design functions. (Section 2.5.1 of this SER provides further discussion of control rod worth and shutdown margin (SDM). Section 4.1.2 of this SER further discusses the inadvertent insertion of reactivity.)

TS 5.3.2, "Control Rods," states the following:

<u>Specifications</u>

1. The three CONTROL RODS shall have scram capability, shall be used for reactivity control, and shall contain borated graphite, B_4C, in powder form.

2. The CONTROL ROD cladding shall be aluminum with nominal thickness 0.028" and length 17".

TS 5.3.2, Specification 1, requires that the control rods employ a B_4C absorber and the control rods are capable of scramming. The NRC staff reviewed TS 5.3.2, Specification 1, and finds that the material has well-established nuclear and material characteristics. The TS also requires that all of the control rods be able to scram. The NRC staff finds that this specification will help to ensure that the reactor meets the operability requirements used in the SAR.

TS 5.3.2, Specification 2, requires the shim and regulating rods to be aluminum cladded with nominal thickness 0.028 in (0.071 cm) and length 17 in (43.2 cm). The NRC staff reviewed TS 5.3.2, Specification 2, and finds that the fabrication of the control rods helps to ensure that

they will perform reliably and that their intended control and safety functions are as analyzed in the SAR.

The NRC staff finds that TS 5.3.2, Specifications 1 and 2, characterize important design features of the control rods and are consistent with the guidance in NUREG-1537 and ANSI/ANS-15.1-2007. Based on the information provided above, the NRC staff concludes that TS 5.3.2, Specifications 1 and 2, are acceptable.

TS 3.1, "Reactor Core Parameters," Specifications 3c and 3d, state the following:

> Specifications
>
> (…)
>
> 3. Core configurations:
>
> (…)
>
> (c) No control rod shall be removed from the core unless a minimum of four fuel bundles are removed from the core, having reactivity greater than the control rod.
>
> (d) The reactor shall only be operated with three OPERABLE control rods.
>
> (…)

TS 3.1, Specifications 1 through 3b, are evaluated in Section 2.5.1 of this SER and found acceptable.

TS 3.1, Specification 3c, requires that no control rod shall be removed from the core unless a minimum of four fuel bundles are removed from the core, having reactivity greater than the control rod. The NRC staff reviewed TS 3.1, Specification 3c, and finds that it provides reasonable assurance that there is sufficient negative reactivity for the reactor to remain shut down when removing a control rod to prevent an inadvertent criticality excursion event.

TS 3.1, Specification 3d, specifies the number of operable control rods. The NRC staff reviewed TS 3.1, Specification 3d, and finds that requiring the operability of three control rods (two control rods and a regulating rod, the regulating rod is considered a control rod in the TSs) at all times helps ensure that the operable core is analogous to the core analyzed in the SAR.

TS 3.1, Specifications 4 and 5, are evaluated in Sections 2.2.1 of this SER and found acceptable.

The NRC staff reviewed TS 3.1, Specifications 3c and 3d, and finds that they provide important operational requirements of the control rods that are consistent with the guidance in NUREG-1537 and ANSI/ANS-15.1-2007. Based on the information provided above, the NRC staff concludes that TS 3.1, Specifications 3c and 3d, are acceptable.

TS 3.2, “Reactor Control and Safety Systems,” Specifications 1 and 2, states the following:

Specifications

1. The DROP TIME from the initiation of scram signal of each of the three standard CONTROL RODS from the fully withdrawn position to the fully inserted position shall not exceed one second.

2. Maximum positive reactivity insertion rate by CONTROL ROD motion shall not exceed $0.30 per second.

(…)

TS 3.2, Specification 1, specifies that the control rod insertion time is 1 second or less for all three control rods. The NRC staff reviewed TS 3.2, Specification 1, and finds that its consistent with “Insertion of Excess Reactivity” accident analysis in Section 4.1.2 of this SER, it helps ensure that the reactor will be shut down promptly when a scram signal is initiated, and the rod drop time is typical of TRIGA-type reactors.

TS 3.2, Specification 2, specifies the reactivity insertion rate and therefore, the rate of power change. The NRC staff reviewed TS 3.2, Specification 2, and finds that if the control servo amplifier were to fail (inadvertent addition of reactivity), the most conservative power, rod position, and other reactor conditions would be bounded by the insertion of reactivity accident that the licensee performed in the reactivity addition accident analyses in response to RAI No. 84 (Ref. 12). (Section 4.1.2 of this SER provides further discussion on the insertion of reactivity accidents.)

TS 3.2, Specifications 3 through 6, are evaluated in Section 2.5.3 of this SER and found acceptable.

TS 3.2, Specifications 1 and 2, help ensure that, during the normal operation of the MUTR, the time required for the reactor control and protection systems to initiate a scram from the instant that a safety channel variable reaches the safety system setting is rapid enough to prevent exceeding a SL. The NRC staff concludes that TS 3.2, Specifications 1 and 2, support the design-basis requirements provided in the SAR to prevent fuel damage and are acceptable.

TS 1.3, “Definitions - CONTROL ROD GUIDE TUBE,” states the following:

Hollow tube in which a CONTROL ROD moves.

TS 4.2, “Reactor Control and Safety Systems,” Specifications 1 through 3, 7, and 8, states the following:

Specifications

1. The reactivity worth of each CONTROL ROD shall be determined annually, at intervals not to exceed 15 months, and after each time the core fuel configuration is changed or a CONTROL ROD is inspected.

2. The CONTROL ROD withdrawal and insertion speeds shall be determined annually, at intervals not to exceed 15 months, or whenever maintenance or repairs are made that could affect rod travel times.

3. CONTROL ROD DROP TIMES shall be measured annually, at intervals not to exceed 15 months, or whenever maintenance or repairs are made that could affect their DROP TIME.

(…)

7. A visual inspection of one of the CONTROL ROD poison sections shall be made annually, at intervals not to exceed 15 months. In a 3 year period, all sections shall be inspected.

8. A visual inspection of the CONTROL ROD drive and scram mechanisms shall be made annually, at intervals not to exceed 15 months.

TS 1.3 defines the control rod guide tube. In SAR Section 4.2.1.5, the licensee stated that the control rod guide tube has the same outside diameter and screw end bottom fitting as a fuel element in the fuel bundle. The NRC staff reviewed TS 1.4 and finds that the guide tube fastens firmly on the bottom adapter and is rigidly supported in the grid plate. (Section 2.2.5 of this SER provides further discussion of the core support structure.)

TS 4.2, Specification 1, helps ensure the acceptability of the control rod worth to support the SDM determination in accordance with TS 3.1, Specification 2, and to provide a means to confirm the reactivity worth of excess reactivity and experiments. The NRC staff reviewed TS 4.2, Specification 1, and finds that measurement of the control rod reactivity worth on an annual basis and after each time the core fuel configuration is changed or a control rod is inspected is consistent with the guidance in NUREG-1537, Section 4.2, and provides reasonable assurance of predictable reactivity changes that will not exceed the SDM. (Section 2.5.1 of this SER provides further discussion of SDM.)

TS 4.2, Specification 2, helps maintain the limits imposed by TS 3.2 on the control rod reactivity insertion rates to help ensure that the limits on maximum reactivity insertion rates are not exceeded. The NRC staff reviewed TS 4.2, Specification 2, and finds that the surveillance frequency helps ensure the detection of control rod and control rod drive deterioration. Testing after maintenance or repair will help confirm that the maintenance or repair was successful and did not introduce a performance issue.

TS 4.2, Specification 3, helps ensure the acceptability of the control rod drop time as required to support TS 3.2 and confirms that the control rods' safety function operates properly. The NRC staff reviewed TS 4.2, Specification 3, and finds that the surveillance frequency helps ensure the detection of scram electronics or control rod deterioration. Also, testing after maintenance or repair will help confirm that the maintenance or repair was successful and did not introduce a performance issue.

TS 4.2, Specifications 4 through 6, are evaluated in Section 2.5.3 of this SER and found acceptable.

TS 4.2, Specifications 7 and 8, specify the surveillance frequency for the visual inspection of the control rods and drives. The NRC staff reviewed TS 4.2, Specifications 7 and 8, and finds that

the surveillance frequency helps ensure the operability of the control rods and drives as required to support TS 3.2. The NRC staff finds that the specifications assess corrosion and wear characteristics and detect deterioration of the control rods or the control rod drives and potential damage caused by reactor operations. The NRC staff also finds that TS 4.2, Specifications 7 and 8, are consistent with the guidance in NUREG-1537, Appendix 14.1, Section 4.2.

The NRC staff reviewed TS 4.2, Specifications 1, 2, 3, 7, and 8, for reactor control and safety systems and finds these consistent with the guidance in NUREG-1537. The periodic visual inspections of the control rods will help detect the potential for corrosion-related degradation. The periodic inspections of the control rod drives and drop-time measurements help minimize the potential for conditions that would interfere with the scram capability of the control rods. The NRC staff concludes that the requirements to ensure the proper performance of the control rods are acceptable. (Section 2.3 of this SER provides further discussion of the water purity.)

The NRC staff reviewed the design and performance of the control rods and finds that they provide adequate reactivity worth, structural rigidity, and reliability to help ensure reliable operation under all operating conditions. The control rods have the ability to scram without challenging the integrity of other reactor systems. The control rod materials have been used in many similar TRIGA-type reactors and have demonstrated reliable operation and a long service life. The design of the control rods is consistent with the requirements provided in the safety analyses.

Based on the information provided in the SAR, as supplemented, and the results of the review discussed above, the NRC staff finds that the control rods conform to the applicable design bases. The reactor control system has sufficient safety design to inhibit control rod movement and limit the addition of reactivity, and it can shut down the MUTR from any operating condition or applicable accident scenario. The control rod design for the MUTR includes sufficient reactivity worth such that the excess reactivity planned for the MUTR is controlled and assurance given that acceptable shutdown reactivity and margin is provided. The licensee has justified appropriate TSs design limits, limiting conditions for operations (LCOs), and surveillance requirements for the control rods. On the basis of the information provided above, the NRC staff concludes that the control rods and applicable TSs are acceptable.

2.2.3 Neutron Moderator and Reflector

The licensee described the neutron moderator and reflector in Section 4.2.3 of the SAR (Ref. 1), as supplemented by responses to RAIs (Ref. 58). The MUTR has four types of neutron moderators and reflectors. The predominant moderator is the H of U-$ZrH_{1.7}$ alloy incorporated into the fuel elements. Graphite slugs are located above and below the fuel region of each TRIGA fuel element and serve as reflectors. Two graphite blocks, encapsulated in aluminum, are located in two grid positions and act as reflectors. The thermal column experimental facility and pool water between the fuel elements serve as a moderator. None of the reflectors are reactive with water.

The design of the fuel elements that contain the graphite slugs and the graphite moderator blocks encapsulated in aluminum minimize the potential for coolant infiltration. The construction of the fuel assembly allows graphite slug growth in the vertical direction. Additionally, the design of the graphite moderator blocks allows them to be positioned on the core support structure and handled in a similar fashion as the fuel bundles. No experimental facilities make up an integral part of these reflectors. Normal operation of the MUTR does not impose any

significant forces or weights on the moderators or reflectors that would interfere with safe reactor operation and shutdown.

Based on its review of the information in the SAR, as supplemented, the NRC staff finds that moderator and reflector elements are compatible with their chemical, thermal, mechanical, and radiation environments; the design should allow for dimensional changes from radiation damage and thermal expansion; and reflector malfunction would not prevent safe reactor shutdown. The NRC staff has reviewed the constituents, materials, and components for the reflector elements and concludes that they are in agreement with the description in the SAR. On the basis of the information provided above, the NRC staff concludes that the moderator and reflector elements are consistent with the guidance in NUREG-1537, Section 4.2.3, and are acceptable.

2.2.4 Neutron Startup Source

The licensee described the neutron startup source in Sections 2.4.2 and 7.1.1 of the SAR (Ref. 1), as supplemented by responses to RAIs (Ref. 55). The MUTR has used the plutonium-beryllium neutron startup source since at least 1986. The source holder is an anodized aluminum rod assembly with a cavity to contain the neutron source. Although the dimensions of the assembly permit it to be installed in any of the fuel locations in the core, it generally is located in one of the outermost positions. A 2.3-mm (0.093-in)-diameter hole is drilled through the top end fitting to permit a long string to be looped through for ease of handling. The source holder is cylindrical with a small shoulder at the upper end. This shoulder supports the source assembly in the grid plate assembly, with the rod itself extending down into the core region. The neutron source is contained in a cavity in the lower portion of the rod assembly and is located at the approximate vertical center of the core. In the event the source becomes depleted, it will be stored outside the reactor pool in a shielded container.

The primary function of the neutron source is to provide neutrons for reactor startup instrument response. Insufficient neutrons would not satisfy the count rate interlock. This would inhibit control rod movement if the neutron count is less than 1 count per second (cps), as specified in TS 3.2, Specification 4.

The NRC staff reviewed the information provided in the SAR, as supplemented, and finds that the neutron startup source is similar to other TRIGA-type reactor startup sources and produces an acceptable count rate for reactor startup instrumentation. The staff's review of the licensee's annual reports (Refs. 50 through 54) and NRC IRs (Refs. 44 through 48) finds no indication of degradation to the existing source. Based on the information provided in the SAR and as discussed above, the NRC staff concludes that the neutron startup source is consistent with the guidance in NUREG-1537, Section 4.2.4, and is acceptable.

2.2.5 Core Support Structure

The licensee described the core support structure in SAR Sections 4.2.5 and 4.3 (Ref. 1), as supplemented by responses to RAIs (Refs. 55, 56, and 58). The core is vertically supported on top of a grid plate assembly. The grid plate assembly is supported 13 in (33 cm) above the tank floor by Type 6061 aluminum angle brackets bolted to the grid plate and pads heliarced (welded) to the tank floor. The core support grid plate is designed to ensure a stable and reproducible core configuration. The grid plate contains a 9-by-5 pattern of holes 5.7 cm (2.2 in) in diameter, spaced 8.1 cm (3.189 in) in the east-west direction and 7.709 cm (3.035 in) in the north-south direction. The bottom fuel bundle adapter fits snugly into these holes and rests on the grid plate assembly, providing support and alignment for the fuel element bundles. The grid

plate assembly allows for the accurate positioning of the core components, such as fuel element bundles, detectors, and experimental devices. Predictable fuel integrity depends on these stable and reproducible component locations and coolant flow patterns.

A bridge support structure over the pool provides support for all in-core detectors, control rod drives, startup source mechanisms, diffuser pipes, pool water instrumentation, and pneumatic tubes. The bridge support structure provides tolerances for motion and reproducible positioning of those core components. This structure provides the capability to rigidly hold components and reproduce responses of instrumentation and control systems, including the neutron source and control rods.

The NRC staff reviewed SAR Sections 4.2.5 and 4.3, as supplemented, and finds that there is reasonable assurance that the core support structure will provide the support for the essential core components over the renewal period without adversely affecting public health and safety.

2.3 Reactor Tank or Pool

The licensee described the reactor tank in Sections 4.3, 5.2, and 5.4 of the SAR (Ref. 1), as supplemented by responses to RAIs (Refs. 8, 16, 55, and 96). The reactor tank, which is 2.13 m (7 ft) in diameter and 6.48 m (21.2 ft) high, has a capacity of 22.7 cubic meters (6,000 gallons). It is a welded cylindrical aluminum vessel made of a 0.95 cm (0.37 in) thick plate on the sides and a 1.25-cm (0.5-in) -thick aluminum plate on the bottom. The reactor pool tank is embedded in a poured concrete biological shield, which provides structure support and helps maintain integrity. Biological shielding is integral to the tank design. The reactor core is positioned near the bottom of the tank under approximately 5.33 m (17.5 ft) of light demineralized water, which serves as a radiation shield, neutron moderator, and reactor coolant. Natural convection of the water through the reactor core transfers the heat generated in the reactor fuel to the pool water. The facility is equipped with an external heat exchanger system that ultimately disposes of the heat to city water, released to the sanitary sewer system. It is designed such that the secondary system is at a higher pressure than the primary system at all times to help prevent an unmonitored release of radioactive liquid into the sanitary sewer system.

Five flanged nozzles are welded on the reactor tank. Four of the nozzles are for two radial experiment beam tubes and the two ends of a through tube. The fifth nozzle connects to the thermal column. The reactor tank incorporates a fuel storage rack, a grid support structure, the reactor bridge and its supports, and piping. The bridge support structure that spans the reactor pool provides support for the in-core detectors, control rod drive mechanisms, startup source mechanism, nitrogen-16 diffuser piping, pool water instrumentation, and pneumatic tubes. Primary coolant piping inlet and outlets are located at the top level of the tank. Siphon breaks to prevent a loss-of-coolant accident (LOCA) are installed on any piping system such as the primary demineralizer and diffuser system, immersed in the pool that may extend greater than 29 in (73.66 cm) below a referenced point. The siphon breaks prevent a pipe break from siphoning primary coolant from the pool to a level that is less than 15 ft (4.5 m) about the top of the fuel.

There is an overflow system that prevents make-up water from overflowing the pool tank. In the event of an overflow, an overflow drain would divert the water to the sump system, rather than allow the water to flood the bridge area. This would prevent the formation of corrosion that would occur if moisture were to form between the tank and the concrete shield structure. The pool overflow piping has a higher capacity than the primary coolant makeup system to help

ensure that the coolant level will never exceed the top of the tank. The reactor pool water level is monitored by means of an ultrasonic level detector mounted on the bridge with display on the control panel. In response to RAI No. 4a (Ref. 96, the licensee stated external alarms are available to notify management personnel. In response to RAI No. 69 (Ref. 8), the licensee states that the pool water level hasn't exceeded the level of the aluminum tank which would induce corrosion from the outside. In response to RAI No. 14 (Ref. 55), the licensee stated that reactor operation is tracked to the kilowatt-hour and a comparison to the amount of makeup water added per kilowatt-hour is made. In response to RAI No. 4c (Ref. 96), the licensee stated normal coolant losses correspond to six inches a month. Leakage would be observed by monitoring the pool level display, sump level display, or excessive water consumption, as determined by the comparison of kilowatt-hours of operation to the amount of makeup water added. Completion of the initial startup checklist would reveal any leakage that occurred before reactor operation. The longest a small leak could go undetected is 10 days, which corresponds to the maximum time the MUTR facility is closed during the annual winter holiday break. This leak would have to be a leak that did not result in the loss of enough coolant to set off the external alarm. In response to RAI No. 4b (Ref. 96), the licensee stated that in the event that the pool were to develop a leak, the coolant would drain into the moat surrounding the reactor and into a 1,200 gallon sump.

TS 5.2, "Reactor Primary Coolant System," states the following:

<u>Specifications</u>

1. The reactor core shall be cooled by natural convective water flow.

2. Any piping system, such as the primary demineralizer and diffuser system, immersed in the pool, capable of draining pool level below the minimum level shall be equipped with a syphon break to prevent accidental draining of pool below 29 inches of reference level.

TS 5.2, Specification 1, specifies that the reactor core shall be cooled by natural convection. Information provided in the SAR and the licensee's response to RAI Nos. 2a and 2b (Ref. 16) on T-H calculations and historical operation of the MUTR demonstrate that a core can operate safely at the licensed power level of 250 kWt with the natural convection flow of the coolant. The NRC staff reviewed TS 5.2, Specification 1, and the analysis provided in the SAR and finds that the core can be cooled by natural convection flow without the need for forced cooling. (Section 2.6 of this SER further discusses the T-H confirmatory analysis.)

TS 5.2, Specification 2, specifies siphon breaks to help prevent a loss of pool water. The NRC staff reviewed TS 5.2, Specification 2, and finds the restrictions on piping length and siphon break requirements would mitigate draining of the pool in the event of a piping malfunction. The NRC staff finds that the specification will help ensure that the pool water level could only drain 29 in (73.66 cm) below a referenced point and that the core will be covered by minimum pool depth as specified in TS 3.3, Specification 1, for radiation shielding, pressure (boiling temperature at the fuel), and adequate natural convection flow.

A review of the annual reports (Refs. 50 through 54) by the NRC staff finds that the MUTR has had no recent events in which the coolant level rose high enough to overflow the tank liner. Based on its review of the information provided in the SAR, operating history, and independent confirmatory calculations of the licensee's T-H, the NRC staff finds that the TSs help ensure a minimum level of coolant 15 ft (4.57 m) is maintained above the core for coolant flows and

pressures assured in the analyses. The water level provided is adequate for natural convection cooling and radiological shielding for the MUTR. TS 5.2, Specifications 1 and 2, characterize important design features of the MUTR that are consistent with NUREG-1537, Appendix 14.1, Section 3.3, and ANSI/ANS-15.1-2007. On the basis of the information provided above, the NRC staff concludes that TS 5.2, Specifications 1 and 2, are acceptable.
TS 3.3, "Primary Coolant System," states the following:

Specifications

1. A minimum of 15 ft. of coolant shall be above the core.

2. Conductivity of the pool water shall be no higher than $5x10^{-6}$ mhos/cm.

3. The concentrations of radionuclides in the bulk pool water shall be no higher than the values presented for water in 10 CFR Appendix B to Part 20 Table 3.

4. The pool water temperature shall not exceed 90ºC, as measured by thermocouples located in the pool.

TS 3.3, Specification 1, specifies the minimum amount of water above the reactor core to help ensure adequate cooling and biological shielding. The NRC staff reviewed TS 3.3, Specification 1, and finds that the water level given is consistent with the level assumed in the T-H analysis, fuel cooling, and biological shielding. It is also consistent with the guidance in NUREG-1537, Appendix 14.1, Sections 2.1 and 3.3. (Section 2.6 of this SER further discusses the T-H design.)

TS 3.3, Specification 2, requires that the conductivity of the tank water be maintained at or less than 5 micromhos (mhos) to control corrosion. The NRC staff reviewed TS 3.3, Specification 2, and finds that limiting corrosion extends the longevity and integrity of the fuel cladding, helps ensure that the heat transfer between the clad and coolant will not degrade because of oxide buildup, and minimizes the radioactivity of the pool water from the neutron activation of dissolved materials. The staff finds that the specification is consistent with water chemistry guidance in NUREG-1537, Appendix 14.1, Section 3.3.

The NRC staff completed a safety evaluation on pool water electrolytic conductivity (Agencywide Documents Access and Management System Accession No. ML15114A433) that demonstrated that a conductivity limit no greater than 5×10^{-6} mhos/cm will ensure that the hydrogen-ion-concentration (pH) range is limited to 5.6 to 5.8, which is consistent with the guidance in NUREG-1537 to maintain the pH range of 5.0 to 7.5. Since the licensee chose this conductivity limit (5×10^{-6} mhos/cm), there was no need for a TS requirement to limit the reactor pool water pH.

TS 3.3, Specification 3, specifies radionuclide levels to help identify damaged fuel or heat exchanger malfunction. In response to RAI No. 25 (Ref. 15), the licensee stated that the measurements are validated against historical data to ensure that the analyses provide a reasonable indication of abnormal radioactivity levels. If the data indicate high radioactivity, a spectroscopy measurement is required to identify isotopic content to help identify the source of the increased radioactivity content. In response to RAI No. 21a (Ref. 95), the licensee updated TS 3.3 Specification 3 to specify that isotopic activities levels would be controlled to levels less than the regulatory limits on discharge to the sewer. The staff finds that the specification is

consistent with the fission product activity detection guidance in NUREG-1537, Appendix 14.1, Section 3.3.

TS 3.3, Specification 4, helps ensure that the bulk water temperature limits peak fuel temperature. In response to RAI Nos. 2a and 2b (Ref. 16), the licensee stated that with a reactor pool temperature of 90 °C (194 °F), the peak fuel temperature would be 233 °C (450 °F). However, in response to RAI No. 19b (Ref. 55), the licensee noted that an operational limit of 40 °C (104 °F) is practiced to prevent damage to the primary coolant cleanup system resins. The NRC staff reviewed TS 3.3, Specification 4, and finds it to be consistent with the guidance in NUREG-1537, Appendix 14.1, Section 2.1. (Section 2.6 of this SER further discusses the T-H design.)

The NRC staff reviewed TS 3.3, Specifications 1 through 4, and finds that there is reasonable assurance that the coolant level specified provides adequate shielding to protect facility personnel and the level allows natural convective cooling to be established. The NRC staff also finds pool water chemistry minimizes corrosion, and pool water activity is monitored to help limit radioactive content of the reactor coolant, and if there were to be an unplanned discharge to the environs the activity is controlled to levels less than the regulatory limits on discharge to the sewer. The NRC staff also finds that TS 3.3, Specifications 1 through 4, are consistent with the guidance in NUREG-1537, Appendix 14.1, Section 3.3. Based on the information provided above, the NRC staff concludes that TS 3.3, Specifications 1 through 4, are acceptable.

TS 4.3, “Primary Coolant System,” states the following:

<u>Specifications</u>

1. The primary coolant level shall be verified before each reactor startup or daily during operations exceeding 24 hours.

2. Pool water conductivity shall be determined prior to the first startup of the day.

3. Pool water gross gamma activity shall be determined monthly, at intervals not to exceed six weeks. If gross gamma activity is high (greater than twice historical data), gamma spectroscopy shall be performed. Gamma spectroscopy shall be performed quarterly, not to exceed 4 months.

4. Pool water temperature shall be measured prior to the reactor startup and shall be monitored during reactor operation.

TS 4.3, Specification 1, provides the surveillance frequency for verifying the pool coolant level. The NRC staff reviewed TS 4.3, Specification 1, and finds that the surveillance frequency helps ensure that the pool water level is verified daily if the reactor is operating or before reactor startup. The NRC staff finds that this specification provides reasonable assurance that the water level above the reactor core will be sufficient to support TS 3.3, Specification 1.

TS 4.3, Specification 2, provides for periodic monitoring to help ensure that primary coolant water conductivity is determined before the first startup of the day. The NRC staff reviewed TS 4.3, Specification 2, and finds that the surveillance frequency helps ensure the timely discovery of possible changes in primary coolant water chemistry to support TS 3.3, Specification 2.

TS 4.3, Specification 3, provides the surveillance frequency for verifying the analysis of coolant for radioactivity. The NRC staff reviewed TS 4.3, Specification 3, and finds that the frequency would quickly identify damaged fuel or heat exchanger failure. The NRC staff finds that the surveillance frequency also helps ensure the timely discovery of possible changes in primary coolant water chemistry to support TS 3.3, Specification 3.

TS 4.3, Specification 4, provides for surveillance intervals for monitoring pool water temperature at startup and during reactor operations. The NRC staff reviewed TS 4.3, Specification 4, and finds that because the heat source is the 250-kWt reactor, the pool water temperature will increase slowly with time and concludes this frequency of monitoring is acceptable. (Section 2.6 of this SER further discusses the T-H design.)

The NRC staff reviewed Section 2 of the annual reports provided by the licensee (Refs. 50 through 54). The reports show that the MUTR is operated relatively infrequently and at low power levels. This creates a mild pool-water environment in which the inherent corrosion resistance of aluminum minimizes corrosion of the reactor pool tank.

The NRC staff finds that TS 4.3, Specifications 1 through 4, are consistent with the guidance in NUREG-1537, Appendix 14.1, Section 4.3, and that the surveillance frequency provides reasonable assurance that the MUTR staff will detect and correct abnormalities before exceeding the LCO established in Section 3 of the TS. Based on the information provided above, the NRC staff concludes that TS. 4.3, Specifications 1 through 4, are acceptable.

Based on the discussion above and a history of acceptable tank performance at the MUTR, the NRC staff finds that the reactor pool design has acceptable features that will minimize the potential for a loss of integrity that could lead to a loss of coolant or other malfunction, and that in the event of a leak there is reasonable assurance that the facility design will help control the loss of coolant from being released to the environs. In addition, the NRC staff concludes that the pool water level instrumentation and the water quality requirements are adequate to help ensure that the water level above the core is at least 15 ft (4.57 m) during operation and that the water quality standards are appropriate. The NRC staff concludes that the tank and pool coolant at the MUTR facility are acceptable. (Section 4.1.5 of this SER further discusses the LOCA event.)

2.4 Biological Shield

The licensee described the biological shield in Section 4.4 of the SAR (Ref. 1), as supplemented by responses to RAIs (Refs. 13 and 55). The primary purpose of the biological shield is to protect facility personnel from overexposure to radiation. The MUTR's biological shield consists of ordinary concrete, steel plates, and water. The pool tank and shield structure provide a minimum of 0.6 m (1.97 ft) of water and 1.98 m (6.5 ft) of concrete on all sides of the core, except the thermal column side. This thickness extends from the floor level to 3.35 m (11 ft) above the floor or 2.44 m (8 ft) above the core centerline. For the next 0.6 m (1.97 ft) above this level, the concrete shield is 1.5 m (5 ft) thick and then is reduced to 0.9 m (3 ft) thick to the top of the reactor tank. Approximately 5.3 m (17.5 ft) of pool water above the core provides vertical shielding. If a complete LOCA occurs, resulting in a loss of shielding water, the licensee evaluated dose rates for an occupational worker at the biological shield and a member of the public 8.28 m (27 ft) from the biological shield. (Section 4.1.5 of this SER further discusses the LOCA event.)

Special shielding plugs are provided for the experimental facilities. Shielding through the thermal column includes 5 ft (1.5 m) of graphite, 0.12 ft (0.3 cm) of Boral, 1 in (2.5 cm) of steel, a 4-in (10-cm) layer of lead bricks, and 1.0 m (3.3 ft) of concrete. Inner and outer shield plugs are provided for the two beam tubes and each end of the through tube. These plugs, along with additional materials, include 0.12 in (0.3 cm) of Boral, 0.25 in (0.64 cm) of aluminum, 4.82 ft (1.47 m) of concrete, 4 in (10 cm) of lead, and 2 in (5.1 cm) of steel.

The NRC staff reviewed the licensee's annual reports (Refs. 50 through 54) that show that the operating history indicates no radiological overexposures attributed to the inadequacy or degradation of the biological shielding. The NRC staff reviewed NRC IRs (Refs. 44 through 48) that show that the MUTR radiation protection program is acceptable and confirmed this finding by performing independent measurements of radiation levels in the facility.

The NRC staff reviewed SAR Section 4.4, the annual reports provided by the licensee, and NRC IRs and finds that there is reasonable assurance that the biological shield will limit exposures from the reactor and reactor-related sources of radiation so that the limits of 10 CFR Part 20 will not be exceeded. Based on a review of the information above, the NRC staff finds that SAR Section 4.4 is consistent with the guidance in NUREG-1537, Section 4.3, and that there is reasonable assurance the biological shield will protect the health and safety of the public and MUTR staff.

2.5 Nuclear Design

The reactor design bases, as described in the SAR, as supplemented, are established by the maximum operational capability for the fuel elements and fuel element configurations. The TRIGA-type reactor system has five major areas that define the reactor design bases:

(1) fuel temperature
(2) prompt temperature coefficient
(3) control rod worth
(4) T-H and heat transfer (pool water temperature)
(5) reactor power

The SL is based on the fuel temperature, which, because of the strongly negative temperature coefficient of reactivity of the TRIGA fuel, contributes to the inherent safety of the TRIGA-type reactor. A limit on reactor power ensures operation within the SAR design analysis as well as below the fuel temperature SL. The information discussed in this section establishes the design bases for the content of other chapters in this SER.

2.5.1 Normal Operating Conditions

2.5.1.1 Steady-State Operation

The licensee described normal operating conditions in Section 4.5.1 of the SAR (Ref. 1), as supplemented in responses to RAIs (Refs. 11, 13, 16, 55, and 57). The MUTR is licensed to operate at a steady-state maximum power level of 250 kWt. Figure 2-1 in this SER shows the core configuration for the MUTR, indicating the locations of the fuel bundles, control rods, graphite reflectors, and the graphite-lined thermal column. The MUTR core consists of 93 fuel elements grouped into 24 bundles. One of the fuel elements is instrumented. At three other locations within the core, one fuel element in the bundle is replaced with a control rod and guide tube. In addition to the light water, the reactor is reflected by graphite slugs located above and

below the fuel region of each fuel element. Two aluminum-encapsulated graphite blocks are also placed on the core grid plate positions D2 and E2. The graphite-lined thermal column experimental facility, located along the length of the reactor grid plate, provides additional reflecting properties.

2.5.1.2 Control Rod Worth

The licensee described the MUTR operating limits for control rods in Section 4.5.3 of the SAR (Ref. 1), as supplemented by responses to RAIs (Refs. 11 and 13). In the reference core configuration (current core configuration), the nominal reactivity worth of the control rods are (1) regulating rod—$2.30, (2) Shim I—$2.70, and (3) Shim II—$3.00. This results in a combined worth of $8.00. In response to RAI No. 1 (Ref. 13), the licensee stated that, with Shim II fully withdrawn and the other two control rods fully inserted, the reactor is subcritical by more than $3.00. Over core life, the fuel burnup, thermal power densities, and reactivity coefficients affect flux density and control rod worth. TS 3.1, Specification 1, limits the total excess reactivity to $1.12 relative to the reference core configuration. The NRC staff performed confirmatory calculations to demonstrate the licensee's ability to satisfy the TS 3.1 Shutdown Margin limit of $0.50, as shown in Table 2-1 below:

Table 2-1 MUTR Shutdown Margin Confirmatory Calculations

	Excess Reactivity ($)	Shim Rod I ($)	Shim Rod II ($)	Regulating Rod ($)	Calculated SDM ($)	TS 3.1.2 SDM Value ($)
Operational core excess reactivity	+1.40	-2.70	-3.00	-2.30	-3.60	-0.50
TS 3.1.1 core excess reactivity	+3.50	-2.70	-3.00	-2.30	-1.50	-0.50

2.5.1.3 Excess Reactivity

Core excess reactivity is needed for reactivity effects caused by power defect, fission product poisoning buildup, and negative reactivity of experiments. The licensee described that the excess reactivity in the core is reduced by fuel burnup and the buildup in the core of long-lived fission product poisons, primarily samarium. The reference core at a cold, xenon-free critical state requires a nominal value of $6.60 to achieve criticality, and under these conditions, with no experiments in place, the excess reactivity is $1.40.

TS 3.1, "Reactor Core Parameters," Specification 1, states the following:

<u>Specification</u>

1. The EXCESS REACTIVITY relative to the REFERENCE CORE CONDITION, with or without experiments in place shall not be greater than $3.50.

(…)

TS 3.1, Specification 1, establishes a limit on excess reactivity that allows for operational flexibility while limiting the reactivity available for reactivity addition accidents. The maximum excess reactivity helps establish a basis for ensuring that an adequate SDM is available by

control rod insertion. The NRC staff reviewed TS 3.1, Specification 1, and finds that excess reactivity of $1.12 corresponds to a SDM of approximately $3.88 as shown in Table 2-1. The NRC staff finds that the value in TS 3.1, Specifications 1, is greater than $0.50, is consistent with NUREG-1537 Section 3.1, and it is acceptable.

TS 3.1, Specifications 2 through 3b are evaluated in Section 2.5.1 of this SER and found acceptable.

TS 3.1, Specifications 3c and 3d are evaluated in Section 2.2.2 of this SER and found acceptable.

TS 3.1, Specifications 4 and 5, are evaluated in Sections 2.2.1 of this SER and found acceptable.

TS 4.1, "Reactor Core Parameters," Specification 1, states the following:

<u>Specification</u>

1. The EXCESS REACTIVITY shall be determined annually, at intervals not to exceed 15 months, and after each time the core fuel configuration is changed, these changes include any removal or replacement of CONTROL RODS.

(…)

TS 4.1, Specification 1, helps ensure that the excess reactivity is determined by requiring that it be determined annually and after changes in either core configuration or control rods. The NRC staff reviewed TS 4.1, Specification 1, and finds that the surveillance specified is consistent with the guidance in NUREG-1537 and ANSI/ANS-15.1-2007. Based on the information provided above, the NRC staff concludes that TS 4.1, Specification 1, is acceptable.

TS 4.1, Specification 2, is evaluated in Section 2.5.1 of this SER and found acceptable.

TS 4.1, Specification 3, is evaluated in Section 5.4.1 of this SER and found acceptable.

TS 4.1, Specifications 4 through 5, are evaluated in Section 2.2.1 of this SER.

2.5.1.4 Experiment Reactivity Worth

The licensee described the MUTR reactivity worth from experiments in Section 4.5.1 of the SAR (Ref. 1), as supplemented in responses to RAIs (Refs. 2, 13, and 55). Insertion of positive reactivity may result from experiments or the flooding of experimental facilities. TS 3.6, Specifications 1 and 2, limit the reactivity worth of any single experiment to less than $1.00 and of all combined experiments to less than an absolute worth of $3.00.

TS 3.6, “Limitations on Experiments,” Specifications 1 and 2, state the following:

> <u>Specifications</u>
>
> The reactor shall not be operated unless the following conditions governing experiments exist.
>
> 1. The reactivity worth of any single EXPERIMENT shall be less than $1.00.
>
> 2. The total absolute reactivity worth of EXPERIMENTS shall not exceed $3.00, including, the potential reactivity which might result from experimental malfunction and EXPERIMENT flooding or voiding.
>
> (…)

TS 3.6, Specification 1, establishes a limit on the reactivity worth of a single experiment providing operational flexibility. SAR Section 13.2.2.3 provides an analysis showing that a rapid positive reactivity insertion of $2.50 will not exceed the fuel temperature SL. The NRC staff reviewed TS 3.6, Specification 1, and finds that the maximum credible rapid insertion of reactivity is $1.00, which is less than the $2.50 analyzed in the SAR. The NRC staff finds that TS 3.6, Specifications 1, is consistent with NUREG-1537 Section 3.7 and it is acceptable. (A ramp insertion of reactivity and rapid reactivity accidents are provided in Sections 2.2.2 and 4.1.2 (respectively) of this SER.)

TS 3.6, Specification 2, establishes a $3.00 reactivity limit on the absolute value of all combined experiments. In response to RAI No. 1 (Ref. 13), the licensee stated that the maximum combined worth of experiments is limited by the $3.50 core excess reactivity in TS 3.1, Specification 1. SAR Section 13.2.2.3 provides an analysis showing that the fuel temperature SL will not be exceeded as a result of a hypothetical $3.70 rapid insertion of reactivity. The NRC staff reviewed TS 3.6, Specification 2, and finds that the total absolute reactivity worth for all experiments is both the negative and positive reactivity values of experiments in the reactor. The $3.50 core excess reactivity limit with experiments in place remains the bounding limit and restricts the experimental reactivity worth to less than the analyzed accident of a rapid insertion of $3.70. The NRC staff finds that TS 3.6, Specifications 2, is consistent with NUREG-1537, Section 3.7, and it is acceptable. (A ramp insertion of reactivity and reactivity accidents are provided in Sections 2.2.2 and 4.1.2 (respectively) of this SER.)

TS 3.6, Specifications 3 through 6, are evaluated in Section 5.3.6 of this SER.

The NRC staff reviewed the licensee’s conduct and control of experiments in NRC IRs (Refs. 45 and 47) and the licensee’s annual reports (Refs. 50 through 54). The NRC staff finds that special experiments were evaluated by the licensee in 2013, and the IR indicates that the total reactivity for experiments was evaluated and subsequently reviewed by the Reactor Safety Committee. The NRC staff finds that TS 3.6, Specifications 1 and 2, are consistent with the guidance in NUREG-1537, Appendix 14.1, Sections 3.8 and 3.8.1, and that the experiments’ reactivity limits provide reasonable assurance that an inadvertent insertion of reactivity will not exceed an SL. (Section 4.1.2 of this SER further discusses reactivity addition accidents.)

2.5.1.5 Shutdown Margin

The licensee described the MUTR operating limit for SDM in Section 4.5.3 of the SAR (Ref. 1), as supplemented by responses to RAIs (Refs. 13, 55, 78). The purpose of defining a SDM is to ensure that the reactor can be shut down by an acceptable margin of $0.50, even if the most reactive control rod sticks in the most reactive position. In addition to assuming that the most reactive control rod is not available to help shut down the reactor, the TSs place constraints on the core conditions and experiments. The core conditions are those most limiting for determining the SDM—temperature of 20 °C (68 °F) and negligible ($0.01 or less) xenon poison in the core. The change in excess reactivity with burnup is expected to be predictable and consistent, and this change may be reviewed over time to monitor for reactivity anomalies. All experiments are considered to be in their most reactive state to ensure that the reactor is not subcritical because of experiments that could be removed from the core. The reference cold critical core requires the removal of $6.60 of the $8.00 nominal control rod worth to reach criticality, leaving a reactor core excess reactivity of $1.40. If the highest worth control rod of $3.00 is fully withdrawn and without any experiment in place, the SDM would be $3.60. The total absolute reactivity worth of all combined experiments is limited to $3.00 as defined in TS 3.6, Specification 2. Combining the excess reactivity and experiments yields an SDM of $0.60, which is greater than the SDM of $0.50 as defined in TS 3.1, Specification 2. Additionally, the excess reactivity relative to the cold critical conditions, with or without experiments, is limited to $3.50 as defined in TS 3.1, Specification 1.

TS 3.1, "Reactor Core Parameters," Specifications 2a through 2c, state the following:

<u>Specifications</u>

(…)

2. The SHUTDOWN MARGIN shall not be less than $0.50 with:

   (a) The reactor in the REFERENCE CORE CONDITION; and
   (b) Total worth of all experiments in their most reactive state; and
   (c) Most reactive CONTROL ROD fully withdrawn.

(…)

TS 3.1, Specifications 1 is evaluated in Section 2.5.1 of this SER and found acceptable.

TS 3.1, Specification 2a, defines the condition of the reactor when determining the SDM. The reactivity state of a reactor can be affected by the fission product xenon, which is a neutron poison, and by the temperature of the reactor. The NRC staff reviewed TS 3.1, Specification 2a, and finds that a reference core condition is defined so that reactivity measurements can be adjusted to a fixed baseline. The NRC staff also finds that TS 3.1, Specification 2a, is consistent with the guidance in NUREG-1537 and ANSI/ANS-15.1-2007.

TS 3.1, Specification 2b, helps ensure constraints on the core reactivity condition by considering that all experiments are in their most reactive state. The NRC staff reviewed TS 3.1, Specification 2b, and finds that using the value for all experiments in their most reactive state helps ensure that the reactor remains subcritical even if experiments are removed from experimental facilities. The NRC staff also finds that TS 3.1, Specification 2b, is consistent with the guidance in NUREG-1537 and ANSI/ANS-15.1-2007.

TS 3.1, Specification 2c, helps ensure that the reactor can be shut down even if the most reactive control rod becomes stuck outside of the reactor core. The NRC staff reviewed TS 3.1, Specification 2c, and finds that Shim Rod II is the most reactive control rod. The NRC staff also finds that TS 3.1, Specification 2c, is consistent with the guidance in NUREG-1537 and ANSI/ANS-15.1-2007.

TS 3.1, Specifications 3a and 3b, are evaluated in Section 2.5.1 of this SER and found acceptable.

TS 3.1, Specifications 3c and 3d, are evaluated in Section 2.2.2 of this SER and found acceptable.

TS 3.1, Specifications 4 and 5 are evaluated in Section 2.2.1 of this SER and found acceptable.

The NRC staff reviewed SAR Section 4.5.3 and TS 3.1, Specifications 2a through 2c, and finds that there is reasonable assurance of sufficient negative reactivity worth to comply with the single stuck rod criterion (ability to shut down the reactor with a stuck scrammable rod). Based on a review of the information above, the NRC staff finds that SAR Section 4.5.3 and TS 3.1, Specifications 2a through 2c, are consistent with the guidance in NUREG-1537, Section 4.2.2, and Appendix 14.1, Section 3.1, and Specifications 2a through 2c are acceptable.

TS 3.1, "Reactor Core Parameters," Specifications 3a through 3b, states the following:

> <u>Specifications</u>
>
> (…)
>
> 3. Core configurations:
>
> (a) The reactor shall only be operated with a STANDARD CORE.
>
> (b) No fuel shall be inserted or removed from the core unless the reactor is subcritical by more than the worth of the most reactive FOUR ELEMENT FUEL BUNDLE plus $0.50.
>
> (…)

TS 3.1, Specifications 1 and 2, are evaluated in Section 2.5.1 of this SER and found acceptable.

TS 3.1, Specification 3a, limits reactor operations to the standard core as defined in TS 1.3 with design features described in TS 5.3 and analyzed in the applicant's response to RAI Nos. 2a and 2b (Ref. 16). The NRC staff reviewed TS 3.1, Specification 3a, and finds that the core configuration is the same as the one analyzed in response to RAI Nos. 2a and 2b (Ref. 16).

TS 3.1, Specification 3b, is precautionary and requires the core to be more subcritical than the most reactive fuel bundle plus an additional $0.50 of reactivity, before performing any fuel element insertion or removal. The NRC staff reviewed TS 3.1, Specification 3b, and finds that the restrictions placed on fuel bundle manipulation help ensure that fuel movements will be conducted in a subcritical core and any reactivity change plus a margin of $0.50 is less than the credible inadvertent insertion accident analyzed in response to RAI Nos. 59, 60, and 1 (Refs. 2

and 13). The NRC staff also finds that TS 3.1, Specification 3b, is consistent with the guidance in NUREG-1537 and ANSI/ANS-15.1-2007.

TS 3.1, Specifications 3c and 3d, are evaluated in Section 2.2.2 of this SER and found acceptable.

TS 3.1, Specifications 4 and 5, are evaluated in Sections 2.2.1 of this SER and found acceptable.

The NRC staff finds that TS 3.1, Specifications 3a and 3b, are consistent with the guidance in NUREG-1537, Appendix 14.1, Section 3.1, and ANSI/ANS-15.1-2007. On this basis, the NRC staff concludes that TS 3.1, Specifications 3a and 3b, are acceptable.

TS 4.1, "Reactor Core Parameters," Specification 2, states the following:

> <u>Specifications</u>
>
> (...)
>
> 2. The SHUTDOWN MARGIN shall be determined annually, at intervals not to exceed 15 months, and after each time the core fuel configuration is changed, these changes include any removal or replacement of CONTROL RODS.
>
> (…)

TS 4.1, Specification 1, is evaluated in Section 2.5.1 of this SER and found acceptable.

TS 4.1, Specification 2, specifies that the SDM is to be monitored regularly and is to be determined upon any change in core fuel configuration, including any replacement or removal of control rods. The NRC staff finds that TS 4.1, Specification 2, helps ensure that the surveillance interval will detect changes in core behavior important to excess reactivity, SDM, and the core configuration. The NRC staff also finds that TS 4.1, is consistent with the guidance in NUREG-1537 and ANSI/ANS-15.1-2007.

TS 4.1, Specification 3, is evaluated in Section 5.4.1 of this SER and found acceptable.

TS 4.1, Specifications 4 and 5, are evaluated in Section 2.2.1 of this SER and found acceptable.

The NRC staff reviewed the licensee's reactivity analysis for the core and finds that the analysis presented in the SAR, as supplemented, justifies the input parameters used. The NRC staff finds that the licensee adequately analyzed the reactivity effects of individual core components. TSs related to the normal operating conditions of the reactor core include limits on excess reactivity, the minimum SDM, core configuration, and surveillance requirements for the core reactivity parameters and reactivity worth of the control rods. These TSs are consistent with the guidance in NUREG-1537 and ANSI/ANS-15.1-2007. The NRC staff finds that the analysis presented in the SAR, as supplemented, adequately justifies these TSs and shows that normal reactor operation will help prevent exceeding a SL and the release of fission products from the fuel. Based on these considerations, the NRC staff concludes that the licensee has adequately analyzed expected normal reactor operations during the period of the renewed license.

2.5.2 Reactor Core Physics Parameters

The licensee described the reactor fuel in Sections 1.3.2.6 and 4.5.2 of the SAR (Ref. 1), as supplemented by responses to RAIs (Ref. 58). An important safety feature of a TRIGA reactor is the reactor core's inherent large, prompt, negative temperature coefficient of reactivity, resulting from an intrinsic molecular characteristic of the U-$ZrH_{1.7}$ fuel matrix at elevated temperatures. The negative temperature coefficient is primarily a result of the neutron spectrum-shifting properties of $ZrH_{1.7}$ at elevated temperatures, which increase the leakage of neutrons from the fuel-bearing material into the water moderator where they are absorbed preferentially. The reactivity decrease is a prompt effect because the fuel and $ZrH_{1.7}$ are mixed intimately, and thus the $ZrH_{1.7}$ temperature rises essentially simultaneously with the reactor power. An additional contribution to the prompt, negative temperature coefficient of reactivity is the Doppler broadening of U-238 resonances at elevated temperatures that increases the neutron capture cross section. The values of prompt neutron lifetime (3.9×10^{-5} second (s)) and effective delayed neutron fractions (β_{eff}) (β_{eff} = 0.007) for the MUTR are similar to those for other TRIGA reactors. The delayed neutron lifetime (12.5 s) and the mean neutron lifetime (88 milliseconds) for the MUTR are similar to those for other TRIGA reactors.

Measured neutron fluxes in the MUTR are as follows:

- peak thermal 4×10^{12} neutrons per square centimeter per second (n/cm^2-s) (in PTS)
- peak fast 2×10^{12} n/cm^2-s
- peak epithermal 7.5×10^{10} n/cm^2-s

The thermal neutron flux for the core operating at 250 kWt is approximately 4×10^{12} n/cm^2-s, which is consistent with the flux for other research reactors operating at this power level.

Design reactivity coefficients for the MUTR are as follows:

- fuel −1.2 ¢/°C
- moderator +3.0 ¢/°C
- power −0.53 ¢/kW

The "moderator" coefficient listed above is for the water surrounding the fuel and the "fuel" coefficient is from the H of U-$ZrH_{1.7}$ alloy incorporated into the fuel elements. In response to RAI No. 1 (Ref. 58), the licensee stated that the change in fuel temperature is more immediate than a change in the temperature of the water surrounding the fuel elements, causing significant negative reactivity before any positive reactivity results from an increase in moderator temperature. The predominant negative reactivity is added to the reactor by the H of U-$ZrH_{1.7}$ as a result of the fuel temperature coefficient's response to the rise in the temperature of the fuel. The large, prompt, negative temperature coefficient inherent in $ZrH_{1.7}$ fuel rapidly and automatically acts to compensate for insertions of positive reactivity, terminating potential power excursions without depending on electronic or mechanical protective systems or operator protective action.

The NRC staff reviewed SAR Sections 1.3.2.6 and 4.5.2, responses to RAI No. 1 (Ref. 58), NUREG-1282 (Ref. 37), and finds that given the establishment of a thermal driving head and heat sink by the large volume of coolant in the pool, the reactivity effects of the pool water moderator temperature increase very slowly in comparison to the fuel temperature reactivity effects. Additionally the NRC staff finds that licensee considered appropriate core physics

parameters, the significant negative reactivity feedback is a result of fuel and power coefficients, and there is reasonable assurance that the fuel reactivity coefficient is an inherent safety feature to large step insertions of positive reactivity. The NRC staff finds that the reactor core physics parameters are consistent with the guidance in NUREG-1537, Appendix 14.1, Section 3.1. On this basis, the NRC staff concludes that the reactivity coefficients are acceptable.

2.5.3 Operating Limits

The licensee described the operating limits in Section 4.5.2 of the SAR (Ref. 1), as supplemented by responses to RAIs (Refs. 16, 19, and 58). The regulations in 10 CFR 50.36(c)(1) require licensees to specify SLs and LSSSs. As defined in 10 CFR 50.36(c)(1), SLs are limits on important process variables that are found to be necessary to reasonably protect the integrity of certain physical barriers that guard against the uncontrolled release of radioactivity. LSSSs for nuclear reactors are defined as settings for automatic protective devices related to those variables having significant safety functions. Where an LSSS is specified for a variable on which a SL has been placed, the setting must be chosen so that an automatic protective action will correct the abnormal situation before a SL is exceeded.

The reactor is operated by the use and manipulation of the control rods in response to observed changes in measured reactor parameters, such as neutron flux (reactor power) and fuel temperature, provided by the instrumentation channels. In addition, interlocks in the control rod circuits prevent inadvertent reactivity additions, and a scram system initiates a rapid, automatic shutdown if the LSSS is exceeded.

TS 2.1, “Safety Limit,” states the following:

> <u>Specification</u>
>
> The temperature in a standard TRIGA FUEL ELEMENT shall not exceed 1000ºC under any conditions of operation, with the fuel fully immersed in water.

TS 2.1 specifies the SL of 1,000 °C (1,832 °F) for the maximum fuel temperature under any conditions of operation. The NRC staff reviewed TS 2.1 and finds that fuel temperature is an important parameter for a TRIGA reactor. A loss in the integrity of the fuel element cladding could arise from a buildup of excessive gas pressure in the gap between the fuel and the cladding, if the fuel temperature is high enough. The pressure is caused by the presence of air, fission product gases, and H from the disassociation of the H and Zr in the fuel. The magnitude of this pressure is determined by the U-ZrH_x fuel temperature and the ratio of H to Zr in the alloy.

The SL for the stainless-steel-cladded, high-hydride TRIGA fuel is based primarily on experimental evidence obtained during high-performance reactor tests on this fuel. Data indicates that the stress in the cladding caused by H pressure from the dissociation of ZrH and from other gases will remain below the cladding stress limit, provided that the temperature of the fuel does not exceed 1,150 °C (2,102 °F) and the fuel cladding is less than 500 °C (932 °F) which is consistent with water cooling. Based on the H to Zr ratio of the fuel, the MUTR TS establish a conservative value of 1,000 °C (1,832 °F) as the SL based on the theoretical and experimental evidence conducted by GA.

The NRC staff finds that TS 2.1 establishes a maximum fuel element temperature SL for the MUTR standard TRIGA fuel that is consistent with the SLs used for other TRIGA reactor fuel elements (supported by research conducted by GA) approved by the NRC. The NRC staff finds that TS 2.1 is consistent with the guidance in NUREG-1537, Appendix 14.1, Section 2.1, and that the fuel element temperature SL is acceptable.

The LSSS is the measured IFE temperature that, if exceeded, will initiate a scram to prevent the fuel element temperature SL from being exceeded. For the MUTR, the LSSS is set equal to or less than 175 °C (347 °F), as measured by the IFE in grid plate position D8. Exceeding this limit causes a scram and protects the fuel temperature from exceeding the SL.

TS 2.2, "Limiting Safety System Settings," states the following:

> Specification
>
> The LIMITING SAFETY SYSTEM SETTING shall be 175ºC as measured by the INSTRUMENTED FUEL ELEMENT (IFE).

TS 2.2 specifies the temperature limit as measured by the thermocouples in the IFE. In response to RAI Nos. 2a and 2b (Ref. 16), the licensee stated that the IFE can be located in any lattice position and the LSSS of 175 °C (347 °F) would prevent the highest temperature fuel element from exceeding 350 °C (662 °F), except certain lattice positions in B4, C3, and C8. The NRC staff reviewed TS 2.2 and the response to RAI Nos. 2a, 2b and 12 (Ref. 16 and 78) and finds that the definition "Standard Core" is an arrangement with the IFE in grid plate position D8. Applying a conservative power peaking factor of 1.76 to the IFE in D8, the maximum fuel temperature in the core would be 308 °C (586 °F).

A further provision in the TSs limit the reactor power level to help ensure that the SL will not be exceeded. The reactor safety channel scram setting established in TS 3.1, Table 3.1 (Table 2-2 of this SER) would scram the reactor if the power level were to exceed 300 kWt, 120 percent of full power. In response to RAI Nos. 2a and 2b (Ref. 16), the licensee stated that at a steady-state power level of 300 kWt, a conservative calculated peak fuel temperature is 252 °C (484 °F).

The NRC staff reviewed SAR Section 4.5.2, responses to RAI Nos. 2a and 2b, and TS 2.2 and finds that there is reasonable assurance that the LSSS IFE fuel temperature setting and the reactor power scram help ensure that the SL of 1,000 °C (1,832 °F) will not be exceeded.

Based on a review of the information above, the NRC staff finds that TS 2.1 and 2.2 are consistent with the guidance in NUREG-1537, Appendix 14.1, Sections 2.1 and 2.1.2, and are acceptable.

TS 3.2, "Reactor Control and Safety Systems," Specifications 3 through 6, states the following:

> Specifications
>
> (…)
>
> 3. The reactor SAFETY CHANNELS shall be OPERABLE in accordance with Table 3.1, including the minimum number of channels and the indicated maximum or minimum set points, for the scram channels.

4. The safety interlocks shall be OPERABLE in accordance with Table 3.2, including the minimum number of interlocks.

5. The Beam Port and Through Tube interlocks may be bypassed during a reactor operation with the permission of the Reactor Director.

6. A minimum of one reactor power channel, calibrated for reactor thermal power, shall be attached to a recording device sufficient for auditing of reactor operation history.

TS 3.2, Specifications 1 and 2, are evaluated in Section 2.2.2 of this SER and found acceptable.

TS 3.2, Specification 3, helps ensure that during normal operation, the minimum number of reactor safety channels required for safe operation of the reactor are operable.

Table 2-2 Reactor Safety Channels: Scram Channels*

Scram Channel	Minimum Required Operable	Scram Setpoint
Reactor Power Level	2	Not to exceed 120%
Fuel Element Temperature	1	Not to exceed 175 °C
Power Supply for Reactor Power Levels	2	<90%
Manual Scram	1	N/A
Console Electrical Supply	1	Loss of electrical power to the control console
Rate of Power Change - Period	1	Not less than 5 seconds
Radiation Area Monitors	1	<50 mr/hr (bridge monitor) <10 mr/hr (exhaust monitor)
Pool Water Temperature	1	< 90 °C, manual scram
* TS 3.2(3) Table 3.1, "Reactor Safety Channels: Scram Channels"		

- The reactor power level high-power scram provides protection to help ensure that the reactor can be shut down before exceeding the SL of the fuel.

- The fuel element temperature scram, as measured by an IFE thermocouple, helps ensure that the reactor can be shut down before exceeding the LSSS on the fuel element temperature which protects the SL of the fuel.

- The reactor scrams if the power supply for one of the power level safety channels fails, this prevents the operation of the reactor without two linear power channels and adequate instrumentation.

- The manual scram allows the operator to shut down the reactor if an unsafe or abnormal condition occurs.

- Console electrical supply requires the console to have power to help ensure that the reactor cannot be operated without a reliable electrical supply to the reactor protection system and adequate instrumentation.

- The rate of power change or period scram helps ensure that the reactor is operated in a manner that allows the operator to control reactor power and to automatically shut down the

reactor to prevent exceeding the SL. (Section 4.1.2 of this SER further discusses reactivity addition accidents.)

- The radiation area monitors help ensure that an automatic scram from a high ARM signal will shut down the reactor, and the reactor operator will be alerted when there are high radiation levels at the pool bridge or exhaust louver.

- Pool water temperature limit helps ensure the reactor will be shut down prior to exceeding the values used in T-H analysis in the SAR, as supplemented by RAI No. 2 (Ref. 58). The reactor operator will manually scram the reactor before this limit is exceeded. Because pool temperature increases very slowly with time during reactor operation, the reactor operator will have sufficient warning to take action.

TS 3.2, Specification 4, helps ensure that during the normal operation the minimum number of interlocks required for safe operation of the reactor are operable.

Table 2-3 Reactor Safety Channels: Interlocks*

Interlock/Channel	Function
Log Power Level	Provides signal to period rate and minimum source channels. Prevent control rod withdrawal when neutron count rate is less than 1 cps.
Startup Count Rate	Prevent control rod withdrawal when neutron count rate is less than 1 cps.
Safety 1 Trip Test	Prevent control rod withdrawal when Safety 1 Trip Test switch is not in operate.
Plug Electrical Connection	Disable magnet power when Beam Port or Through Tube plug is removed unless bypass has been activated.
Rod Drive Control	Prevent simultaneous manual withdrawal of two or more control rods in the steady state mode of operation.
* TS 3.2(4) Table 3.2, "Reactor Safety Channels: Interlocks"	

- The log power-level interlock helps provide a minimum neutron detector input signal to the startup count rate channel.

- The startup count rate helps ensure that a sufficient supply of startup neutrons is available to achieve a controlled approach to criticality. (Section 2.2.4 of this SER provides further discussion of the neutron startup source.)

- The Safety 1 trip interlock test helps ensure that the 1-cps interlock cannot be bypassed by creating an artificial 1-cps signal with the Safety 1 trip-test switch.

- The plug electrical connection interlock helps ensures that the reactor cannot be operated with beam port or through tube plugs removed without the implementation of further safety precautions and permission of the facility director.

- The rod drive control interlock prevents more than one control rod from being withdrawn at a time, thus limiting the maximum positive reactivity rate that can be inserted during steady-state operation.

TS 3.2, Specification 5, specifies interlocks to help ensure that the operator is aware of the status of both the beam ports and the through tube when the reactor is operating.

TS 3.2, Specification 6, provides for a means to monitor reactor operations and confirm that the reactor is not operated outside TSs.

The NRC staff reviewed TS 3.2, Specifications 3 through 6, and finds that there is reasonable assurance that during the normal operation of the MUTR sufficient information is available to the operator and the minimum number of reactor safety system channels and interlocks are operable for the safe operation of the reactor in manual and automatic modes of operation. Based on a review of the information above, the NRC staff finds that TS 3.2, Specifications 3 through 6, are consistent with the guidance in NUREG-1537, Section 3.2, and are acceptable.

TS 4.2, "Reactor Control and Safety Systems," Specifications 4 through 6, states the following:

Specifications

(…)

4. All scram channels listed in Table 3.1 shall have a CHANNEL TEST, including trip actions with CONTROL ROD release and specified interlocks as listed in Table 3.2 performed after each SECURED SHUTDOWN, before the first operation of the day, or prior to any operation scheduled to last more than 24 hours, or quarterly, with intervals not to exceed 4 months. Scram channels and interlocks shall be calibrated annually, at intervals not to exceed 15 months.

5. CHANNEL TESTS shall be performed on all affected safety and control systems after any maintenance is performed.

6. A CHANNEL CALIBRATION shall be made of the linear power level monitoring channels annually, at intervals not to exceed 15 months.

(…)

TS 4.2, Specifications 1 through 3 are evaluated in Section 2.2.2 of this SER and found acceptable.

TS 4.2, Specification 4, requires that the reactor safety scram channels be tested and calibrated at specific intervals to ensure that the overall scram functional capability is maintained. The NRC staff reviewed TS 4.2, Specification 4, and finds that the surveillance frequency specifies defined terms in the TSs which helps ensure that the reactor safety channels will be operable as specified in TS 3.2. The NRC staff also finds that TS 4.2, Specification 4, is consistent with the guidance in NUREG-1537, and ANSI/NS-15.1-2007.

TS 4.2, Specification 5, requires the performance of operability tests after maintenance or repairs. The NRC staff reviewed TS 4.2, Specification 5, and finds that the surveillance frequency specifies defined terms in the TSs, which helps ensure that the reactor safety channels will be operable following maintenance or repairs to the reactor safety system to help ensure that any affected channel will perform as intended, as specified in TS 3.2. The NRC staff also finds that TS 4.2, Specification 5, is consistent with the guidance in NUREG-1537, and ANSI/NS-15.1-2007.

TS 4.2, Specification 6, requires the linear power-level channel to be calibrated annually. The NRC staff reviewed TS 4.2, Specification 6, and finds that the surveillance frequency helps

ensure that the reactor will be operated at the licensed power levels. The NRC staff also finds that TS 4.2, Specification 6, is consistent with the guidance in NUREG-1537, and ANSI/ANS-15.1-2007.

TS 4.2, Specifications 7 and 8, are evaluated in Section 2.2.2 of this SER and found acceptable.

The NRC staff reviewed TS 4.2, Specifications 4 through 6, and finds that they are consistent with the guidance in NUREG-1537, Appendix 14.1, Section 4.2, and that the surveillance frequency provides reasonable assurance for the performance of the checks, calibrations, and tests of the reactor safety channels and power measuring channels listed in TS 3.2. The performance and operability of those systems and components have sufficient margin to prevent reaching the SL in TS 2.1. Based on the information provided above, the NRC staff concludes that TS 4.2, Specifications 4 through 6, are consistent with guidance in ANSI/ANS-15.1-2007 and are acceptable.

2.6 Thermal-Hydraulic Design

The licensee described the T H design in Section 4.6 of the SAR (Ref. 1), as supplemented by responses to RAIs (Refs. 9, 16, 56, 57, and 58) and validated by the NRC staff's independent confirmatory calculations. The core is immersed in an open tank of light water, positioned near the bottom of the tank under approximately 5.3 m (17 ft) of light demineralized water. TS 3.3, Specification 1, establishes the minimum height of the water column above the reactor core (4.57 m (15 ft)). The fuel elements are cooled by natural convection of the coolant through the coolant flow channels in the reactor core. The natural thermal convection of the water transfers the heat generated in the core to the pool water. Heat is created in the fuel from the fission process. This heat enters the coolant flow channels. As the coolant surrounding the fuel elements heats up, the frictional and hydrostatic head losses in the core flow channels balance with the core entrance driving head. This establishes the natural circulation flow which increases as the core entrance driving head overcomes the frictional and hydrostatic head losses. When necessary, the pool water may be pumped through an external heat exchanger system that ultimately disposes of the heat to city water that is released to the sanitary sewer system to cool the primary coolant.

In response to RAI Nos. 2a and 2b (Ref. 16), the licensee provided T-H analyses to determine the allowable IFE locations and analyze peak fuel temperatures. In response to RAI No. 2 (Ref. 58), the licensee provided the results of the T-H analyses with the DNBR at power levels of 300 kWt and 600 kWt. The analyses have shown that, for a case in which the reactor would be operated at 300 kWt and pool temperature would be at 92 °C (198 °F), the peak fuel temperature in the hottest fuel element would not exceed 252 °C (487 °F).

The licensee used the T-H model described above to establish the allowable locations for the IFE when the LSSS limit is set at 175 °C (347 °F). The analysis indicated that with the exception of four peripheral locations, the 175 °C (347 °F) LSSS would ensure that the peak fuel temperature would be less than 350 °C (662 °F), well below the TS 2.1 fuel temperature SL of 1,000 °C (1,832 °F). (Section 2.5.3 of this SER further discusses the operating limits.)

The licensee also used the Reactor Excursion and Leak Analysis Program (RELAP5) code to determine the DNBR using the Bernath correlation, a critical heat flux correlation historically used for TRIGA reactors. The licensee's calculated DNBR is 2.96 at 600 kWt with a corresponding DNBR of 5.92 at 300 kWt with a pool temperature of 92 °C (198 °F).

Confirmatory Analysis

An important parameter in the T-H design of a reactor is the critical heat flux. This parameter describes the heat flux associated with the departure from nucleate boiling using calculated results manipulated by a correlation. The critical heat flux is used to characterize the DNBR, which is the minimum ratio of the critical heat flux to the maximum calculated heat flux over the axial length of a fuel element. In NUREG-1537, Section 4.6, the NRC staff provided guidance that this ratio should be greater than 2. Properly applied, the calculated DNBR must be in a regime where no flow anomalies are present. Such anomalies include “chugging,” which represents bulk boiling and can lead to power fluctuations.

The NRC staff used the TRAC/RELAP Advanced Computational Engine (TRACE) computer code to confirm the results of the MUTR RELAP5 T-H analysis. The two-channel TRACE model as shown in Figure 2-4, employed for the analysis of the MUTR uses the core average power from the neutronic analysis, which is calculated by dividing the total kilowatts by the total number of fuel elements (3.225 kWt per fuel element). The peaking factor of 1.6 is the ratio of the hottest fuel element power (5.16 kWt) to the average. The neutronic results used from the licensee’s analysis form the basis of the T-H analysis and effectively establish this configuration as the limiting core configuration.

The power distribution within the fuel element radially uses a curve that is typically used in TRIGA analysis and has been found to be appropriate for the MUTR as well. No peaking factors are applied to the N-1 channel.

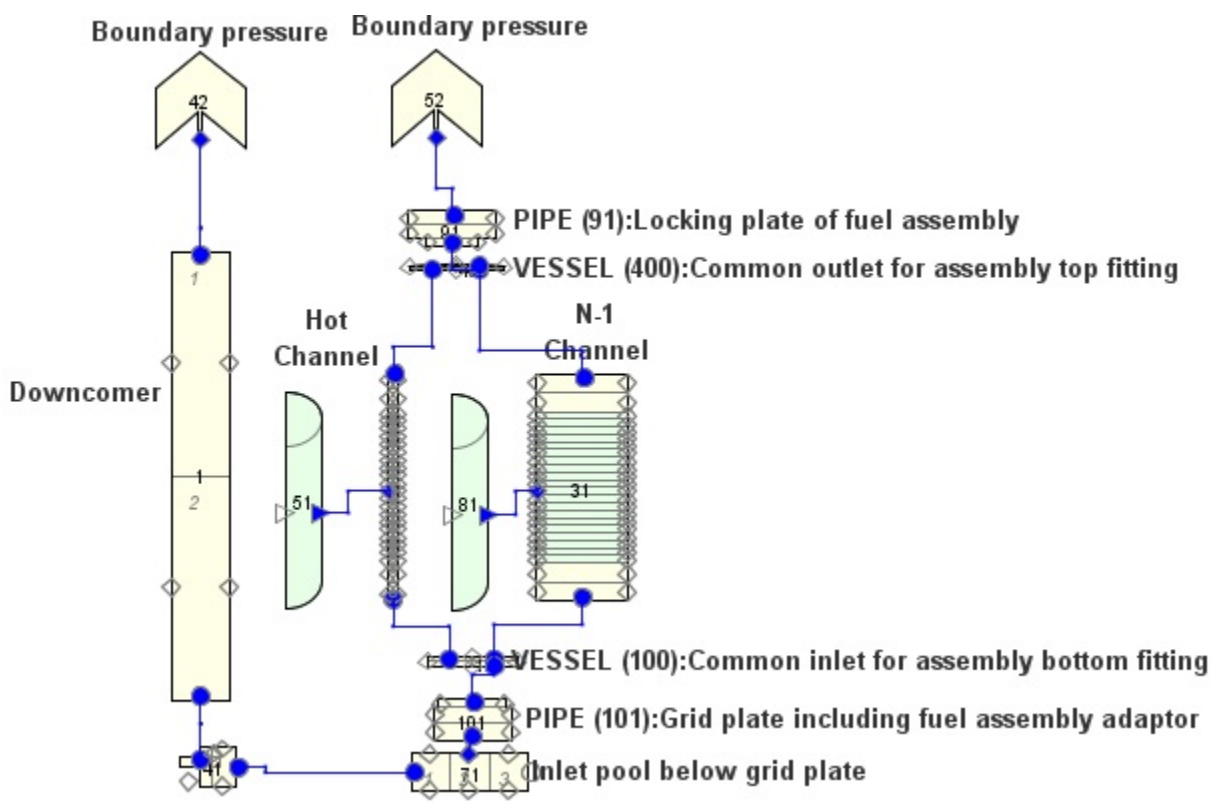

Figure 2-4 MUTR DNBR model using TRACE

The nodalization (noding) of the heat structure in the TRACE model is quite fine radially in the channels and axially along the channels length. Outside of the active fuel region, the noding becomes coarser as such zones are unimportant to the DNBR calculations. The hot channel is a stainless-steel-clad fuel element, it has a Zr central rod having 1 radial interval, intervals 2–20 are for fuel, interval 21 is for the air gap, and interval 22 is for the cladding. Axially, intervals 1-2 are for the lower graphite reflector, intervals 3-22 are for the fuel, and intervals 23-24 are for the upper graphite reflector.

For the N-1 channel, the axial noding is identical to the hot channel. Radially, the N-1 channel has 23 nodes vs the 22 used in the hot channel.

The DNBR analysis modeled a power ascension using several steps. The inlet temperature is held constant at 90 °C (194 °F). At each step (0, 50, 100, 150, 200, 250 (the licensed power), and 300 kWt (the power level scram setpoint)), TRACE is allowed to achieve equilibrium natural circulation flow and a comprehensive evaluation of the thermal-hydraulic conditions is performed, including assessments of the flow velocities, fuel temperatures, and the minimum DNBR.

Figure 2-5 depicts the results from the NRC staff's analysis. It shows that the coolant density changes very little as power is increased. The NRC staff finds that this small level of subcooled boiling is acceptable and appropriately represented by the TRACE model.

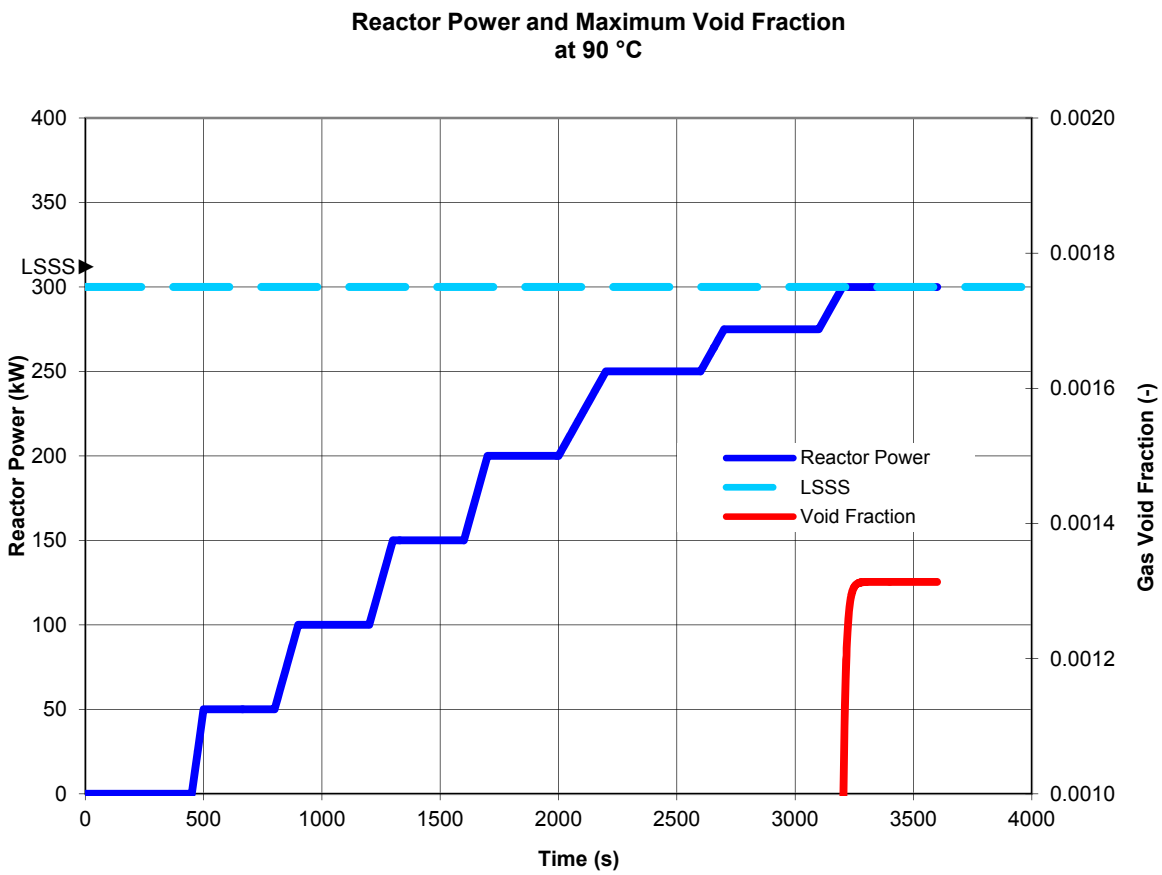

Figure 2-5 MUTR coolant quality assessment

As depicted in Figure 2-6, the coolant velocities vary smoothly with increases in reactor power and show no evidence of chugging, instability, or oscillation. The NRC staff finds that the TRACE model appropriately represents the calculated behavior of coolant velocity.

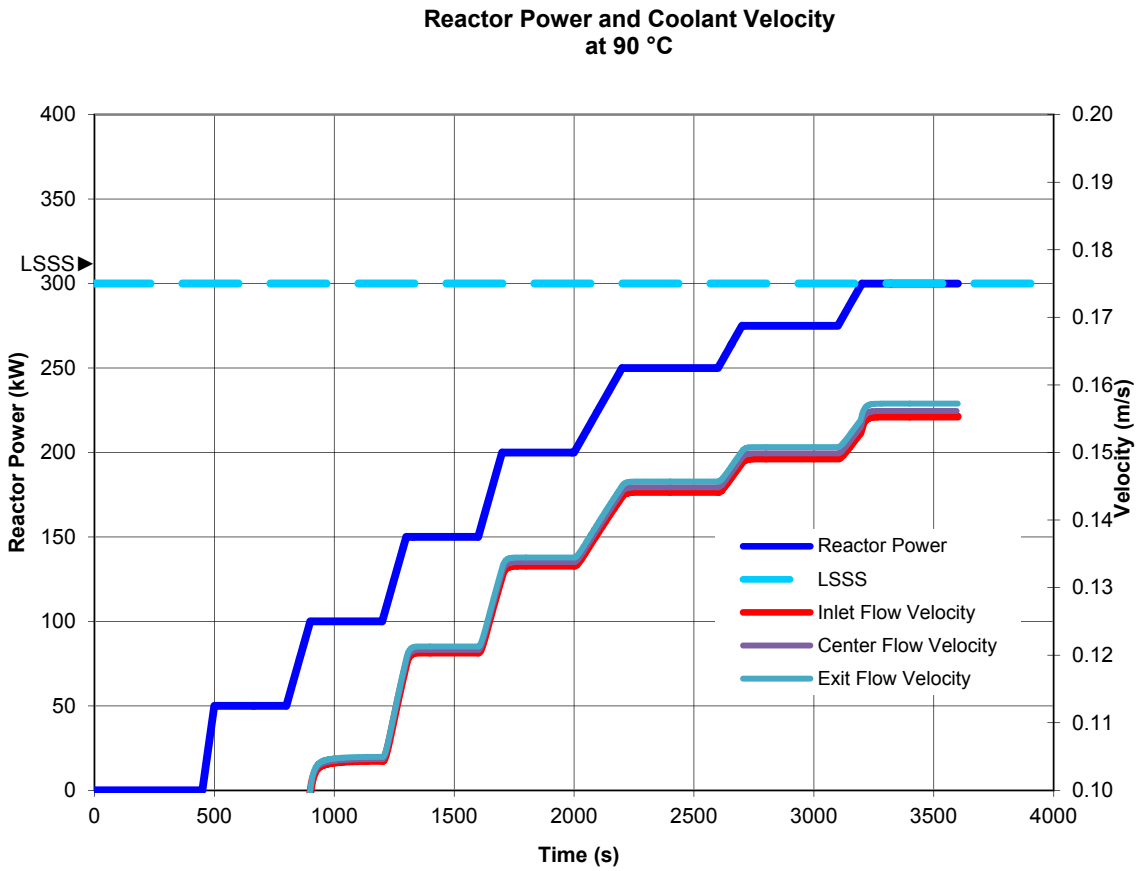

Figure 2-6 MUTR flow stability assessment

As shown in Figure 2-7, the behavior of the calculated MUTR DNBR for the cited conditions is smooth and regular with changes in reactor power.

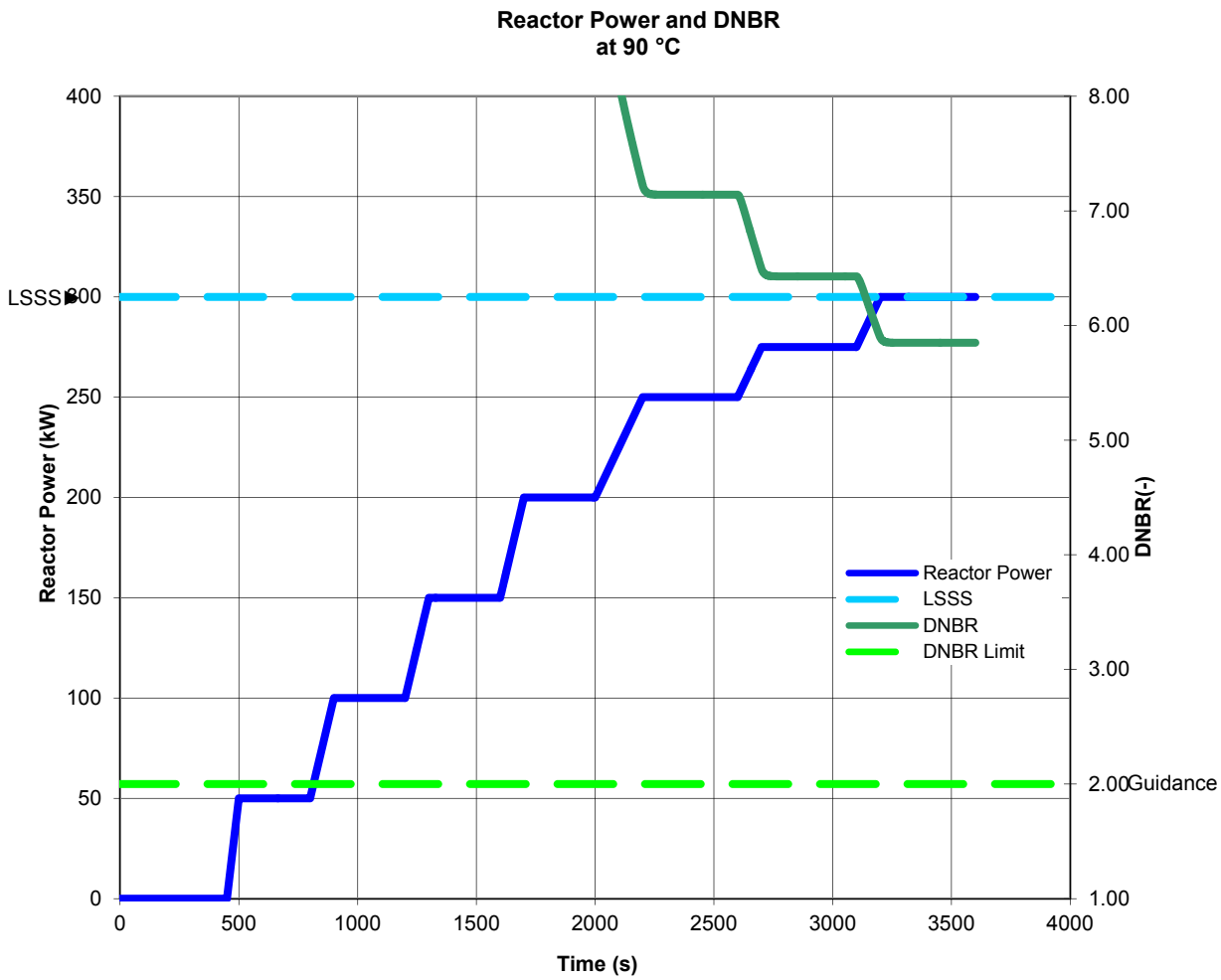

Figure 2-7 MUTR DNBR results

In addition, the NRC staff performed a similar analysis using a maximum power of 600 kWt and an inlet temperature of 92 °C (198 °F). The purpose of this case is to provide a calibration point with the licensee's analysis (Ref. 57), as shown in Table 2-4. In that analysis, the licensee was able to obtain a converged solution using RELAP5 and provided a minimum DNBR of 2.96. For that same analysis, the licensee correlated the DNBR to 5.92 for 300 kWt.

Table 2-4 DNBR Results

Power Level	250 kWt		300 kWt		600 kWt	
	NRC (TRACE)	MUTR (RELAP5)	NRC (TRACE)	MUTR (RELAP5)	NRC (TRACE)	MUTR (RELAP5)
Inlet Temperature (°C)	90	92	90	92	92	92
Maximum Fuel Temperature (°C)	197.9	233	214.0	252	306.9	—
Maximum Coolant Exit Temperature (°C)	106.5	—	106.2	105	102.0	—
Minimum DNBR	6.83	NA	5.76	5.92	3.21	2.96

The equivalent TRACE cases compare favorably, indicating a limiting DNBR of 5.76 for the 300-kWt case and 3.21 for the 600-kWt case. The NRC staff finds that the confirmatory DNBR analysis establishes the acceptability of the power level scram setpoint of 300 kWt. The calculated peak fuel temperatures under a range of expected operating conditions within the TSs limits are all well below the SL of 1,000 °C (1,832 °F).

2.7 Conclusions

Based on the references provided by the licensee and NRC staff's review and confirmatory calculations of the licensee's analysis, the NRC staff finds that the licensee has presented adequate information and analyses to demonstrate its technical ability to configure and operate the MUTR core without undue risk to public health and safety or the environment. The NRC staff reviewed the MUTR design, installation, controls and safety instrumentation, operating procedures, and operating limitations, as identified in the TS. Adherence to the TSs provides assurance that the SL will not be exceeded and fuel element integrity will be maintained. Operating data at the maximum licensed steady-state power show that the maximum fuel element temperatures remain well below the prescribed SL. The NRC staff concludes that the T-H analysis in the SAR and RAI responses demonstrate acceptable safety margins for the T-H conditions.

The NRC staff finds that the licensee's analyses used acceptable calculation methods and conservative or justifiable assumptions. The applicability of the analytical methodology is demonstrated by comparing the analytical results with the NRC staff's confirmatory analysis. The NRC staff reviewed the analysis of the steady-state operation of the core at a power level of 250 kWt and finds that the maximum core fuel temperature remains below the limit set by the known mechanical and thermal properties of the fuel. The NRC staff finds that the TSs on the reactor design, reactor core components, reactivity limits, and related surveillance requirements provide reasonable assurance that the reactor will be operated safely in accordance with the TSs. Therefore, on the basis of this review, the NRC staff concludes that there is reasonable assurance that continued operation of the MUTR, up to 250 kWt, as limited by the TSs, would not pose undue radiological risk to the facility staff, the public, or the environment.

3 RADIATION PROTECTION PROGRAM AND WASTE MANAGEMENT

3.1 Radiation Protection

Activities involving radiation at the Maryland University Training Reactor (MUTR) are controlled under the radiation protection program, which must meet the requirements of Title 10 of the *Code of Federal Regulations* (10 CFR) 20.1101, "Radiation protection programs" (Ref. 22), and uses the guidance in American National Standards Institute/American Nuclear Society (ANSI/ANS) -15.11-1993 (R 2004), "Radiation Protection at Research Reactor Facilities" (Ref. 32). The regulations in 10 CFR 20.1101 requires, in part, that each licensee shall develop, document, and implement a radiation protection program and shall use, to the extent practical, procedures and controls based on sound radiation protection principles to achieve occupational doses and doses to members of the public that are as low as reasonably achievable (ALARA). The licensee shall periodically (at least annually) review the radiation protection program content and implementation.

The U.S. Nuclear Regulatory Commission (NRC) staff reviewed the information in the safety analysis report (SAR), as supplemented, regarding radiation protection at the MUTR facility. The NRC inspection program routinely reviews radiation protection and radioactive waste management at the MUTR, and the NRC staff also observed radiation protection and waste management activities at the MUTR during other site visits. The NRC staff reviewed the licensee's annual operating reports for the MUTR and the NRC inspection reports (IRs) with regard to the radiation protection program. The NRC staff finds that the licensee's radiation protection program demonstrated that adequate measures are in place to minimize radiation exposure to personnel and to provide adequate protection against operational releases of radioactivity to the environment. Based on the following discussion, the NRC staff concludes that the radiation protection program at the MUTR facility is acceptable.

3.1.1 Radiation Sources

The NRC staff's review considered the descriptions of potential radiation sources, including the inventories of each physical form and their locations. The MUTR radiation sources can be categorized as airborne, liquid, and solid. The review of radiation sources included the identification of potential radiation hazards, as presented in Chapters 11 and 13 of the SAR, and verification that the hazards were accurately depicted and comprehensively identified.

Airborne Radiation Sources

The licensee described the airborne radiation sources in Sections 11.1.1.1 and 11.1.5.2 of the SAR (Ref. 1), as supplemented by responses to requests for additional information (RAIs) (Refs. 41, 42, and 43). The licensee provided information on production of airborne radiation sources, effluent concentrations, and the subsequent release points of routine airborne radioactive effluents. The analysis also includes dose calculations to the MUTR staff and members of the public. During normal MUTR operations, the primary airborne sources of radiation are argon-41 (Ar-41) and nitrogen-16 (N-16). N-16 results from the irradiation of oxygen in the reactor coolant as it passes through the reactor core and has a 7.13-second half-life. As described in Section 5.6 of the SAR, the MUTR uses an N-16 control system to reduce the intensity of N-16 radiation. A diffuser in the reactor pool tank directs a small flow of water downwards and across the top of the core area. This flow of water disrupts the thermal plume raising through the pool water which contains N-16 from the top of the core to the top of

the pool. The net effect is an increase in the time that it takes the N-16 to reach the pool surface and diffuse across the water-air interface, resulting in a negligible release of N-16 to the reactor bay and the atmosphere. Radiation levels at the pool surface are a combination of N-16 and to a lesser extent direct core radiation. Annual reports provided by the licensee (Refs. 50 through 54) show that dose levels at the pool surface are between 7 millirem (mrem) and 10 mrem (0.07 millisievert (mSv) to 0.1 mSv) per hour. Public exposure as a result of N-16 is negligible given the long air transport time from the reactor pool surface to the unrestricted environment.

At the MUTR, Ar-41 is generated from activation of argon in air-filled cavities of the beam ports, thermal column, and through tube, and dissolved argon in the reactor pool. The core is cooled by the natural convection of pool water that causes the heated water to rise to the surface of the pool along with the air dissolved in the water; some of the dissolved air contains argon activated in the reactor core, which escapes into the reactor bay. The thermal column and pool contribute the greatest amounts of Ar-41 to the air volume in the reactor bay.

The NRC staff reviewed the licensee's calculations of the production and release of routine airborne radioactive effluents and the resultant doses to the MUTR staff and members of the public.

Occupational Dose

The licensee does not normally use ventilation fans to exchange reactor bay air with outside environments or the adjacent Chemical and Nuclear Engineering Building. Ar-41 generated by reactor operation accumulates in the reactor bay and subsequently leaks from the reactor bay to the outside environment or into the Chemical and Nuclear Engineering Building from identified locations. The licensee conducted a series of measurements to determine the Ar-41 effluent concentration in the reactor bay. Four locations were sampled—the reactor bridge, control room, balcony, and experimental floor area. The samples were taken after allowing maximum effluent concentrations to accumulate with the reactor operating at thermal power level of 250 kilowatts, its maximum licensed power. The experimental floor was identified as having the highest concentrations of Ar-41 at 6.6×10^{-7} microcuries per milliliter (μCi/mL), corresponding to 26 percent of the derived air concentration value of 3×10^{-6} μCi/mL. Conservative extrapolated results show that, if the reactor were operated continuously at maximum licensed power for 2,000 hours, the dose to workers in the experimental floor area for the entirety of those 2,000 hours (a work year) would be 1.3 roentgen equivalent man (rem) (0.01 sievert (Sv)). The experimental floor access is limited to reactor staff, escorted individuals, and other occupational workers. In response to RAI No. 1d (Ref. 43), the licensee provided analysis showing that, in the event of a thermal column barrier failure (which would cause increased Ar-41 concentrations in the reactor bay), an occupational worker on the experimental floor would receive at most 1.6 rem (0.02 Sv) during a 6 week period before the failure would be discovered, if reactor bay air samples (taken every 6 weeks or less as required by Technical Specification (TS) 4.5.2, Specification 1, which is discussed below and is acceptable) were the only means of discovering the failure. Even if this failure occurred at the end of the year and the worker had received dose from the normal exposure to Ar-41 up to the last 6 weeks of the year, the resulting doses are well below the 5,000-mrem (50-mSv) limit established in 10 CFR 20.1201, "Occupational dose limits for adults."

Dose to Member of the Public

Members of the public routinely visit the facility in groups or individually for operational demonstrations or tours. All visitors are escorted and issued temporary dosimeters after a brief orientation on facility hazards. The Radiation Safety Office performs annual calibrations on those dosimeters, and the facility maintains records of visitor exposures.

The licensee calculated the potential doses to members of the public outside the site boundary from the release of Ar-41 during normal operation by using the maximum Ar-41 concentration in the reactor bay (6.6×10^{-7} µCi/mL), and considering leakage from the reactor bay to the outside environment. The licensee conducted a detailed engineering assessment to determine the leakage of effluents from the reactor bay. The leakage assessment identified the garage rollup door, personnel doors, louvers, and exhaust openings as leakage points. The total air flow from all these points is 0.036 cubic meters per second (m^3). The licensee stated that, during the majority of the year, the gaps around the garage rollup door would conservatively release 2.5×10^{-2} µCi per second if the leakage were 0.036 m^3 (i.e., if it is assumed that all of the leakage occurs through the rollup door). The analysis used the 2.5×10^{-2} µCi per second release rate and the COMPLY code to show that, if the reactor were operated continuously at maximum licensed power for 8,760 hours in a year, the maximum exposed member of the public, continually located at the facility boundary fence 6.1 meter (m) (20 feet (ft)) from the rollup door for an entire year, would receive 6.6 mrem (0.07 mSv). This is well below the 100 mrem (1 mSv) public dose limit in 10 CFR 20.1301, "Dose limits for individual members of the public," and also below the 10 mrem (0.1 mSv) ALARA constraint on public doses from airborne emissions of radioactive material in 10 CFR 20.1101(d).

The NRC staff performed a confirmatory calculation of the Ar-41 dose to a member of the public located at the site boundary fence, 6.1 m (20 ft) from the rollup door, using the licensee's 2.5×10^{-2} µCi per second release rate and the Pasquill-Gifford methodology. The NRC staff's analysis assumed neutral (Pasquill D) stability conditions and an annual average wind speed of 2 meters per second, and that the wind blows in the direction of the receptor 25 percent of the time (these are similar to the conservative assumptions used by the COMPLY code). The NRC staff's analysis also conservatively neglected building wake effects. The NRC staff calculated that the member of the public continually located at the site boundary fence for an entire year would receive 42.5 mrem (0.43 mSv). The NRC staff note that this dose is greater than the 6.6 mrem (0.07 mSv) dose calculated by the licensee; the difference is due to the variations in methodology and assumptions used for the different calculations, including the NRC staff's calculation conservatively neglecting building wake. The NRC staff also note that the assumption that a member of the public would be located at the site boundary fence for an entire year is extremely conservative because the site boundary fence is not a continually occupied location. The assumption that the reactor would operate continuously throughout the entire year is also conservative, since the typical reactor utilization factor is less than 2 percent. Assuming a 10 percent utilization factor (corresponding the 876 hours per year), which is still conservative, the NRC staff's calculated dose from Ar-41 for a member of the public at the site boundary fence would be 4.3 mrem (0.04 mSv) per year, well below the 100 mrem (1 mSv) public dose limit in 10 CFR 20.1301, and also below the 10 mrem (0.1 mSv) ALARA constraint on public doses from airborne emissions of radioactive material in 10 CFR 20.1101(d).

For approximately 10 percent of the year, atmospheric conditions make it possible for reactor bay effluents to leak into the hallway (room 1398) of the adjacent Chemical and Nuclear Engineering Building. The licensee stated that the air leakage rate from the reactor bay to room 1398 under these conditions would be 0.00236 m^3 per second the volume of room 1398 is

approximately 42 m^3 and the leakage rate from room 1398 is approximately 0.00167 air changes per second. Given these assumptions, and also accounting for the radioactive decay of Ar-41, the maximum concentration that could build up in room 1398 is 2.1×10^{-8} µCi/mL. The licensee provided an analysis in response to RAI No. 1c (Ref. 43) showing that if the reactor was continuously operated over a one year period, if a member of the public were to stay in room 1398 for 876 hours over that one year period, and the reactor bay effluents coincidently leak into room 1398 over that same 876 hours, the calculated dose to that individual would be 16 mrem (0.16 mSv). This is below the 100 mrem (1 mSv) public dose limit in 10 CFR 20.1301, but above the 10 mrem (0.1 mSv) constraint in 10 CFR 20.1101(d). However, the NRC staff notes that it was conservatively assumed that the reactor is only operated with a 10 percent utilization factor (typical reactor utilization factor is less than 2 percent), the dose to the individual would be only 1.6 mrem (0.02 mSv), which is well below both the 100 mrem (1 mSv) public dose limit and the 10 mrem (0.1 mSv) constraint.

The NRC staff notes that in the event of a thermal column barrier failure that would cause the Ar-41 concentration in the reactor bay to be temporarily elevated, the Ar-41 in air effluents leaving the reactor bay would also become elevated. However, the NRC staff notes that similar to the occupational doses discussed above, the public dose during the maximum 6-week period (see TS 4.5.2, Specification 1, which is discussed below and is acceptable) before the failure would be discovered would only be about 20 percent greater than the normal annual public doses from Ar-41. Therefore, any public Ar-41 dose during a thermal column barrier failure would remain well below the 100 mrem (1 mSv) public dose limit in 10 CFR 20.1301. Given that NRC- and licensee-calculated normal annual public Ar-41 doses (taking the conservative 10 percent utilization factor into consideration) are all 4.3 mrem (0.04 mSv) or lower, the public Ar-41 dose during a barrier failure would also remain below the 10 mrem (0.1 mSv) constraint in 10 CFR 20.1101(d).

Dose contributions from N-16 to members of the public outside the facility are negligible because of the short half-life of N-16 and the design of the pool diffuser.

TS 3.5.2, “Effluents,” states the following:

<u>Specification</u>

All effluents from the MUTR shall conform to the standards set forth in 10 CFR Part 20.

TS 4.5.2, “Effluents,” Specifications 1 and 3, states the following:

<u>Specifications</u>

1. Reactor building air samples shall be counted for gross gamma activity monthly, at intervals not to exceed 6 weeks.

(…)

3. Environmental monitors at the boundary shall be exchanged at least quarterly, not to exceed 4 months.

TS 3.5.2 specifies that effluents from the MUTR shall be limited to levels such that the dose limits of 10 CFR Part 20, “Standards for Peotection against Radiation,” will not be exceeded. The NRC staff reviewed TS 3.5.2 and the licensee’s calculated public doses from Ar-41, which

are discussed above, and finds that the calculated doses from release of airborne effluents conform to the public dose limits in 10 CFR Part 20. Liquid effluents, which are discussed later in the section and also in Section 3.2 of this safety evaluation report (SER), are also released such that the concentrations at the point of release will be below the applicable concentration limits in 10 CFR Part 20, Appendix B. The NRC staff finds that by requiring that the licensee control and limit effluent releases such that the dose limits in 10 CFR Part 20 not be exceeded, TS 3.5.2 helps ensure that doses to members of the public from MUTR effluents will be small and at acceptable levels. Based on the information above, the NRC staff concludes that TS 3.5.2 is acceptable.

TS 4.5.2, Specification 1, specifies the surveillance methods and intervals to confirm the release of radioactive effluents. In response to RAI No. 1d (Ref. 43), the licensee provided an analysis (discussed above in this section of the SER) that shows that a 6-week interval is sufficient time for facility staff to discover abnormal effluent levels in the facility. The NRC staff reviewed the licensee's analysis and TS 4.5.2, Specification 1, and finds that the surveillance frequency helps ensure the discovery of abnormal effluents before the limits in TS 3.5.2 are exceeded. Based on the information above, the NRC staff concludes that TS 4.5.2, Specification 1, is acceptable.

TS 4.5.2, Specifications 2 is evaluated in Section 3.1.1 of this SER, and found acceptable.

TS 4.5.2, Specification 3, specifies the surveillance frequency of the environmental monitors. (TS 3.5.1, Specification 4, which is discussed in Section 3.1.7 of this SER and is acceptable, requires these environmental monitors to be maintained at the site boundary.) The NRC staff reviewed TS 4.5.2, Specification 3, and finds that this surveillance frequency is consistent with the guidance in NUREG-1537, "Guidelines for Preparing and Reviewing Applications for the Licensing of Non-Power Reactors," issued February 1996 (Ref. 23), Appendix 14.1, Section 4.7.2, and American National Standards Institute/American Nuclear Society (ANSI/ANS)-15.1-2007, "The Development of Technical Specifications for Research Reactors" (Ref. 30). The NRC staff also finds that TS 4.5.2, Specification 3, helps provide reasonable assurance that the limiting condition for operation (LCO) established in TS 3.5.2 will not be exceeded due to any gaseous effluent from the facility. Based on the information above, the NRC staff concludes that TS 4.5.2, Specification 3, is acceptable.

The NRC staff reviewed Section 11.1.1 of the SAR (Ref. 1), as supplemented by responses to RAI Nos. 1a through 1d (Ref. 41, 42, and 43). The NRC staff confirmed the adequacy of the licensee's results and methodologies for calculation of doses from Ar-41, and also performed a confirmatory calculation of the public dose from Ar-41 in room 1398 and at the site boundary fence, as discussed above. The NRC staff finds that there is reasonable assurance that the routine airborne radiation sources and atmospheric effluent releases of Ar-41 and N-16 meet the limits in 10 CFR 20.1201 and 10 CFR 20.1301. The NRC staff also noted that, assuming worst-case atmospheric conditions occur for an entire year, the calculated dose in unrestricted areas (Room 1398) could be 16 mrem (0.16 mSv), which exceeds the annual 10 mrem/year (yr) (0.10 mSv/yr) ALARA constraint in 10 CFR 20.1101(d). However, in order for this to occur, the reactor must continuously operate at full licensed power for an entire year without shutting down. Given the operational history of the MUTR facility, the low probability a member of the public would be present in the unrestricted area (Room 1398) for the 876 hours where atmospheric conditions were favorable for effluents to enter the room, the surveillance requirement for reactor building air samples, and the fact that the licensee correlates effluent concentration to reactor usage, the NRC staff finds that there is reasonable assurance that the licensee is able cease operation before exceeding the constraint in 10 CFR 20.1101(d). Based

on the information provided above, the NRC staff concludes that the control of airborne radiation sources at MUTR is acceptable.

Liquid Radiation Sources

SAR Section 11.1.1.2 states that impurities in the primary coolant become activated by neutrons as they pass through the reactor core. Most of this material is captured by either mechanical filtration or ion exchange in demineralizer resins and is considered solid radioactive waste.

The licensee samples primary water for radioactive content on a monthly basis to help detect potential fission product leakage from the reactor fuel, leakage from sealed sources, or activation of materials in the coolant water. (Section 2.3 of this SER discusses the primary coolant sampling and purity.)

The licensee stated that potential low-level liquid wastes (other than those related to experiments) are accumulated in the 1,300 gallon (4,980-liter) reactor sump. The five locations that drain to the reactor sump are the sink in the hot room, the reactor bay sink, the reactor pool tank overflow pipe, the backflow prevention valve on the city water connection, and the grate surrounding the reactor concrete shield. All liquids that are collected are sampled and monitored before dilution and release into the sanitary sewer system. Typically, no radionuclides are found in the sump samples. Liquid wastes from experiments are rare, but when they are generated, they are either disposed of by sump dilution or transferred to the University of Maryland's (UMD's) Department of Environmental Safety, Sustainability, and Risk for storage and ultimate disposal under a separate material license. Radiation exposures from these liquid radiation sources at the MUTR are small and do not present a significant hazard to either facility personnel or the public. The Radiation Safety Office monitors all radioactive liquids to be discharged to the environment (through the sanitary sewer) before release to determine compliance with the limits given in Appendix B, "Annual Limits on Intake (ALIs) and Derived Air Concentrations (DACs) of Radionuclides for Occupational Exposure, Effluent Concentrations; Concentrations for Release to Sewerage," to 10 CFR Part 20.

TS 4.5.2, "Effluents," Specification 2, states the following:

> Specifications
>
> (…)
>
> 2. A sample of any water discharged from the reactor building sump shall be counted for gross gamma activity before its release to the environs.
>
> (…)

TS 4.5.2, Specification 1 is evaluated in Section 3.1.1 of this SER and found acceptable.

TS 4.5.2, Specification 2, helps ensure that the radionuclide concentrations in liquid effluents are evaluated before the effluent is discharged to the environment. The NRC staff reviewed TS 4.5.2, Specification 2, and finds that this surveillance is consistent with the guidance in Section 4.7.2 of Appendix 14.1 to NUREG-1537, and Section 4.7.2 of ANSI/ANS-15.1-2007. The NRC staff also finds that TS 4.5.2, Specification 2, helps provide reasonable assurance that the LCO established in TS 3.5.2 will not be exceeded for liquid effluents. Based on the information above, the NRC staff concludes that TS 4.5.2, Specification 2, is acceptable.

TS 4.5.2, Specification 3 is evaluated in Section 3.1.1 of this SER and found acceptable.

The NRC staff reviewed the information provided by the licensee and finds that the operation of the MUTR facility is in compliance with 10 CFR 20.2003, "Disposal by release into sanitary sewerage," and is consistent with the guidance in NUREG-1537, Appendix 14.1, Section 4.7.2. The NRC staff finds that liquid radioactive effluent sources from continued normal operation of the MUTR facility are adequately monitored and will not pose a significant hazard to public health and safety or the environment. Based on a review of the information above, the NRC staff concludes that the control of liquid radiation sources at the MUTR is acceptable.

Solid Radiation Sources

In SAR Section 11.1.1.3, the licensee indicated that the fission products in the reactor fuel and the reactor core are the primary sources of solid source radiation. Nonfuel sources are small and include mainly activated experiments, filters, and ion exchange resins. The radiation protection program controls solid radiation sources. Final experimental radioactivity is estimated before experimental irradiations are performed, so that the requirements for both shielding and storage duration will be known. The facility has two aluminum-clad, plutonium-beryllium neutron startup sources. One is located in the reactor pool and the other is inside the restricted area. The startup source may be located at any of the fuel locations, but it generally occupies an outside position. (Section 2.2 of this SER, in particular Figure 2-1, provides further discussion of the grid plate configuration.)

The NRC staff reviewed the SAR, as supplemented, and finds that solid radioactive sources from normal operation of the MUTR are properly identified, controlled, have resulted in no significant personnel exposures, and can be handled without endangering the safety of the MUTR staff. Based on the information provided above, the NRC staff concludes that the control of solid radioactive sources at the MUTR is acceptable.

3.1.2 Radiation Protection Program

The licensee described the MUTR radiation protection program in Section 11.1.2 of the SAR (Ref. 1), as supplemented by response to RAI No. 1 (Ref. 7). The regulations in 10 CFR 20.1101(a) require that each licensee shall develop, document, and implement a radiation protection program commensurate with the scope and extent of licensed activities. The control and use of radioactive materials at the MUTR are controlled by UMD's Department of Environmental Safety, Sustainability, and Risk under the direction of the radiation safety officer. The program includes, among other topics, radiation fundamentals, pertinent Federal and State regulations, contamination control, inventory control, and monitoring. The radiation protection program is implemented using written standard operating procedures.

TS 6.3, "Radiation Safety," states the following:

> A radiation safety program following the requirements established in 10 CFR Part 20 will be undertaken by the Radiation Safety Office. The Director will ensure that ALARA principles are followed during all facility activities. The program shall follow the guidelines of "Radiation Protection at Research Reactor Facilities," ANSI/ANS-15.11-1993 (2004).

TS 6.3 specifies the group that shall be assigned the responsibility for implementing the radiation protection program. The NRC staff reviewed TS 6.3 and finds that it helps ensure that

the Radiation Safety Office, headed by the radiation safety officer, is responsible for implementing the radiation protection program. TS 6.3 also helps ensure that the radiation protection program follows the guidance in ANSI/ANS-15.11-1993 (2004), "Radiation Protection at Research Reactor Facilities" (Ref. 32). Additionally, the NRC staff finds TS 6.3 is consistent with the guidance in ANSI/ANS-15.1-2007, Section 6.3. Based on the information above, the NRC staff concludes that TS 6.3 is acceptable.

Each separate license, whether issued by the State of Maryland as an Agreement State or by the NRC, has a principal user. At UMD, all experimental programs involving radiation or radioactive materials must interface with the Reactor Safety Office on radiological matters and on administering operational controls involving radioactivity.

The MUTR has a structured radiation protection program with the following elements:

- advising the university administration on the control of radiation hazards;
- directing all radiation safety activities;
- controlling all radioactive materials;
- providing technical support and supervision to all activities on matters of radiation safety;
- conducting education and training programs in radiation safety;
- supplying general surveillance of all radiation safety activities;
- ordering, receiving, possessing, and shipping all radioactive materials;
- calibrating all portable radiation survey instruments;
- maintaining personnel monitoring devices and records of doses to personnel;
- implementing ALARA practices; and,
- maintaining around-the-clock emergency response for emergencies and incidents involving radiation, radioactive material, or personnel exposure.

The radiation protection program establishes the following:

- exposure limits;
- procedures and a record system for surveys and monitoring; and,
- requirements and responsibilities for personnel dosimetry.

The licensee's radiation protection procedures include testing and calibration of the monitors and detection instrumentation; administrative guidelines for receiving, monitoring, handling, transporting, and testing radioactive materials; decontamination; investigation; training; ALARA measures; and personnel access. General training cited in the SAR for principal users includes topics such as the storage, transfer, and use of radiation and radioactive material in portions of the restricted area; radioactive waste management and disposal; health protection problems

and health risks; precautions and procedures to minimize exposure; purposes and functions of protective equipment; applicable regulations and license requirements for the protection of personnel from exposure to radiation and radioactive materials; responsibility for reporting potential regulatory and license violations or unnecessary exposure; appropriate response to warnings in events or unusual occurrences; and, radiation exposure reports.

The regulation in 10 CFR 20.1101(c) requires that licensees shall periodically (at least annually) review the radiation protection program content and implementation. TS 6.2.1.3, which is discussed and found acceptable in SER Section 5.6.2.3, requires that the Reactor Safety Committee (RSC) audit the conformance of facility operation (including radiation protection activities) to the facility license, TSs, and standard operating procedures at least once per year.

TS 6.7.1, "Annual Operating Report," Specification 6, states the following:

> An annual report covering the operation of the reactor facility during the previous calendar year shall be submitted to the NRC before March 31 of each year providing the following information:
>
> (...)
>
> 6. A summary of the nature and amount of radioactive effluents released or discharged to the environment
>
> (...)

TS 6.8.3, "Records to be Retained for the Lifetime of the Reactor Facility," Specifications 1 and 3, states that the following:

> 1. Gaseous and liquid radioactive effluents released to the environs,
>
> (...)
>
> 3. Radiation exposure for all personnel monitored,
>
> (...)

TS 6.7.1, Specifications 1 through 5, are evaluated in Section 5.6.7 of this SER and found acceptable.

TS 6.7.1, Specification 6, requires that a summary of the nature and amount of radioactive effluents released to the environment be included in the annual report that the licensee submits to the NRC. The NRC staff reviewed TS 6.7.1, Specification 6, and finds that this specification helps satisfy radiation protection program reporting requirements, and also helps to ensure that important information will be provided to the NRC in a timely manner. The NRC staff also finds that this reporting requirement is consistent with the guidance in Section 6.7.1 of ANSI/ANS-15.1-2007. Therefore, on the basis of the information above, the NRC staff concludes that TS 6.7.1, Specification 6, is acceptable.

TS 6.7.1, Specifications 7 through 9, are evaluated in Section 5.6.7 of this SER and found acceptable.

TS 6.8.3, Specifications 1 and 3, require that records of gaseous and liquid effluents, and personnel exposure records, be maintained for the lifetime of the facility. The NRC staff reviewed TS 6.8.3, Specifications 1 and 3, and finds that they help ensure that the facility's records retention requirements for records that need to be retained for the lifetime of the facility are appropriately delineated. The NRC staff also finds that the specifications are consistent with the guidance in ANSI/ANS-15.1–2007, Section 6.8.3. Therefore, on the basis of the information provided above, the NRC staff concludes that TS 6.8.3, Specifications 1 and 3, are acceptable. (Section 3.1.7 of this SER provides further discussion of records related to environmental monitoring.)

TS 6.8.3, Specification 2, is evaluated in Section 3.1.7 of this SER and found acceptable.

TS 6.8.3, Specifications 4 and 5, are evaluated in Section 5.6.8.3 of this SER and found acceptable.

The NRC inspection program routinely reviews and inspects MUTR operations, including the radiation protection program. The NRC staff reviewed MUTR annual operating reports (Refs. 50 through 54) and NRC IRs (Refs. 44 through 48), and finds that the information in these reports helps demonstrate that adequate measures are in place to minimize radiation exposure to personnel and provide adequate protection against operational releases of radioactivity to the environment.

The NRC staff reviewed the MUTR radiation protection program, as described in the SAR as supplemented, and finds that the program complies with 10 CFR 20.1101(a) and 10 CFR 20.1101(c), is implemented in an acceptable manner, and provides reasonable assurance that, for all facility activities, the program will protect the MUTR staff, the environment, and the public from unacceptable radiation exposures. The NRC staff also finds that the MUTR radiation protection program is consistent with the guidance in NUREG-1537 and ANSI/ANS-15.11-1993 (R 2004). Based on the information discussed above, the NRC staff concludes the MUTR radiation protection program is acceptable.

3.1.3 As-Low-As-Reasonably-Achievable Program

The licensee described the MUTR ALARA program in Section 11.1.3 of the SAR (Ref. 1), as supplemented by its response to RAI No. 109 (Ref. 12). The licensee established a program designed to keep radiation exposures to personnel ALARA, such that it would be in compliance with 10 CFR 20.1101(b). The ALARA program includes using methods and procedures that shield radiation sources and personnel, increase the distance between an exposure point and a radiation source, reduce the time a person might be exposed to a given dose rate, and contain sources. It also includes the use of careful, thoughtful, advanced planning when working in an area that might contain a radiation field. Various administrative controls have been put into place to accomplish the ALARA goals. The ALARA program is applied through written procedures and guidelines described in the SAR. All proposed experiments and operational procedures at the MUTR facility are reviewed for ways to minimize potential exposure to personnel. The MUTR health physics staff participates in planning experiments to minimize both personnel exposure and the generation of radioactive waste. Additionally, unanticipated or unusual reactor-related exposures are investigated to develop methods to prevent recurrence. The NRC staff's review of controls for limiting access and personnel exposure in the MUTR facility provides reasonable assurance that radiation doses to facility personnel will be ALARA. The ALARA program is adequately supported by the upper levels of the university management. (Section 5.6.2 of this SER further discusses review and audit responsibilities.)

The ALARA program is applied to operations within the facility. The ALARA program is also applied to effluent releases to the environment through TSs 3.5.2 and 4.5.2. (Section 3.1.1 of this SER discusses these TSs and finds them acceptable, and also provides further discussion of effluent releases, including the licensee's compliance with the 10 mrem (0.1 mSv) ALARA constraint on public dose from airborne emissions of radioactive material in 10 CFR 20.1101(d).)

UMD's Department of Environmental Safety, Sustainability, and Risk, the RSC, and the radiation safety officer embrace this program to reduce personnel exposure. TS Figures 6.1 and 6.2 (Figures 5-1 and 5-2 of this SER) show the MUTR organization that supports the ALARA program. TS 6.3 (see SER Section 3.1.2) requires that the Facility Director be responsible for ensuring that ALARA principles are followed during all facility activities.

TS 6.3 also requires the radiation protection program to follow the guidance in ANSI/ANS-15.11-1993 (R-2004). ANSI/ANS-15.11-1993, Section 8, specifies that review and audit of ALARA programs by management shall be conducted at least annually. An ALARA review of the radiological doses at the MUTR is performed on an annual basis, and is reported to the NRC in the annual report.

The NRC staff reviewed the information above. The NRC also reviewed Section 8 of the MUTR annual reports (Refs. 50 through 54), and finds that ALARA audit reports were completed annually, and showed that all badged personnel and students at the facility received less than 10 percent of applicable annual 10 CFR Part 20 dose limits. In addition, the NRC staff reviewed NRC IRs (Refs. 44 through 48) and finds that ALARA guidance documents that delineate the methodology and strategies for reducing dose are available at the MUTR. As discussed in Section 3.1.2 of this SER, the annual reports and the NRC IRs also help demonstrate that adequate measures are in place to minimize radiation exposure to personnel and provide adequate protection against operational releases of radioactivity to the environment. Based on the information above, the NRC staff finds that the ALARA program implemented at the MUTR facility meets the regulatory requirements of 10 CFR 20.1101(b), and that radiation exposure will be maintained ALARA for all facility activities. Based on the information above, the NRC staff concludes that the ALARA program at the MUTR facility is acceptable.

3.1.4 Radiation Monitoring and Surveying

The licensee described radiation monitoring and surveying in Section 11.1.4 of the SAR (Ref. 1), as supplemented by responses to RAIs (Refs. 2, 4, and 95). The MUTR is routinely monitored by a combination of personnel monitoring (discussed further in Section 3.1.5 of this SER), remote area monitoring, portable monitors, periodic air and water sampling, and environmental monitors (discussed further in Section 3.1.7 of this SER).

The regulations in 10 CFR 20.1501(a) state that each licensee shall make, or cause to be made, surveys that have the following characteristics:

(1) May be necessary for the licensee to comply with the regulations in this part; and

(2) Are reasonable under the circumstances to evaluate—

(i) The magnitude and extent of radiation levels; and
(ii) Concentrations or quantities of radioactive material; and
(iii) The potential radiological hazards.

The regulations in 10 CFR 20.1501(c) require that the licensee ensure that instruments and equipment used for quantitative radiation measurements (e.g., dose rate and effluent monitoring) are calibrated periodically for the radiation measured. The licensee has a comprehensive set of portable radiation survey instrumentation that has sufficient range to cover the various types of radiation that may be encountered at the MUTR. This instrumentation is used to perform regular radiation and contamination surveys. The licensee has procedures for performing these surveys, and also maintains records of its monitoring and surveying. In addition, the licensee tests and calibrates the instrumentation as required and in accordance with the procedures of the radiation protection program.

The area radiation monitoring system at the MUTR is described in responses to RAI Nos. 46-50 (Ref. 4). It consists of three area radiation monitors located at strategic points throughout the facility—the south ventilation system exhaust duct, the reactor bridge, and the hot room, which contains a glove box and the manifold for the pneumatic transfer system. All three monitors have local audible and visual alarm capability. The pneumatic system glove box is equipped with a radiation area monitor to provide radiation levels to the operator at the reactor console and to personnel entering the hot room. The monitor on the south ventilation system exhaust fan monitors airborne activity at the exhaust louver for times when the ventilation system is on (the normal configuration of the ventilation system is off). The ventilation system and reactor bridge monitors have remote audible and visual alarm capability in the control room. In addition, the bridge area radiation monitor alarms at the second floor entrance door from the reception room. The exhaust monitor alarms at the stairs from the training area to the reactor bridge. These two monitors are connected in series to allow either the bridge monitor or the exhaust monitor to automatically scram the reactor. The radiation area monitors provide information to operating personnel of any impending or existing danger from radiation so that there will be sufficient time to evacuate the facility and take the necessary steps to limit the spread of radioactivity to the surroundings. Additionally, the area radiation monitor for the reactor bay area can warn personnel entering the building of higher than normal radiation levels.

TS 3.5.1, “Radiation Monitoring Systems,” Specifications 1 through 3, states the following:

<u>Specifications</u>

1. The reactor shall not be operated unless the bridge monitor is OPERATING.

2. For a period of time not to exceed 48 hours for maintenance or calibration to the radiation monitor channel, the intent of specification 3.5.1 shall be satisfied if the bridge radiation monitor is replaced with portable gamma sensitive instrument having its own alarms or which shall be observable by the REACTOR OPERATOR.

3. The alarm set point shall be stated in a facility OPERATING procedure. The alarm set-point for the bridge monitor is <37 mR/hr (alert), <50 mR/hr (scram).

(…)

TS 3.5.1, Specification 1, specifies the number of monitors to evaluate potential radiation hazards. In response to RAI No. 25 and a conversation of record (Ref. 95 and 101), the license provided updates to TS 3.5.1, Specification 1, to require that the Bridge Radiation Monitor be operating during reactor operations. (The other area radiation monitors are not required by the TSs.) The Bridge Radiation Monitor is required to alarm and scram at the setpoints listed under TS 3.5.1, Specification 3. The NRC staff reviewed TS 3.5.1, Specification 1, and finds that because normal facility practice is not to operate fans there is reasonable assurance the specification helps ensure that only the Bridge Radiation Monitor is necessary to alert the operator of unusual radioactivity in the reactor bay, and will also scram the reactor if the radiation levels indicate that a release of radioactivity to the reactor bay may have occurred. The NRC staff also finds that TS 3.5.1, Specification 1, is consistent with the guidance in NUREG-1537, Appendix 14.1, Section 3.7.1. Based on the information above, the NRC staff concludes that TS 3.5.1, Specification 1, is acceptable.

TS 3.5.1, Specification 2, specifies a time limit for portable instruments substituting for the Bridge Radiation Monitor caused by maintenance or calibration. The NRC staff reviewed TS 3.5.1, Specification 2, and finds that time limit in which a portable instrument can be substituted is consistent with the guidance in ANSI/ANS-15.1-2007, Section 3.7.1. Based on the information above, the NRC staff concludes that TS 3.5.1, Specification 2, is acceptable.

TS 3.5.1, Specification 3, specifies the radiation alarm and scram setpoints for the bridge monitor. In response to RAI No. 48 (Ref. 4), the licensee stated that the alarm setpoint is chosen by adding an additional factor to the normal readings at 100 percent reactor power, in order to allow for both drift in the electronic systems and additions to the radiation levels that may be induced by experiments. In response to RAI No. 15 (Ref. 15), the licensee stated that the basis for the bridge monitor scram setpoint is a radiation field 50 percent of a high radiation area. The NRC staff reviewed the response to RAI Nos. 48 and 15 (Refs. 4 and 15) and TS 3.5.1, Specification 3, and finds that TS 3.5.1, Specification 3, allows the necessary operational flexibility be available to perform experiments, while also providing reasonable assurance that occupational and public doses are maintained ALARA and below the applicable dose limits in 10 CFR Part 20. The NRC staff also finds that TS 3.5.1, Specification 3, is consistent with the guidance in NUREG-1537, Appendix 14.1, Section 3.7.1. Based on the information above, the NRC staff concludes that TS 3.5.1, Specification 3, is acceptable.

TS 3.5.1, Specification 4 is evaluated in Section 3.1.7 of this SER and found acceptable.

TS 4.5.1 provides surveillance requirements for the radiation monitoring equipment listed in TS 3.5.1, in order to help ensure compliance with 10 CFR 20.1501(c). TS 4.5.1 is evaluated in Section 5.4.5 of this SER and is acceptable.

TS 4.4, “Confinement and Ventilation System,” states the following:

<u>Specifications</u>

1. Prior to putting the reactor in an unsecured mode, the ISOLATION of the CONFINEMENT building shall be visually verified.

2. The ability to close the louvers of the ventilation system shall be verified before the first reactor operation after a SECURED SHUTDOWN.

TS 4.4, Specification 1, specifies that the confinement shall be verified to be isolated prior to the placement of the reactor into an unsecured mode (reactor shutdown or reactor operating). The NRC staff reviewed TS 4.4, Specification 1, and finds that it helps ensure that the licensee complies with the LCO in TS 3.4, Specification 2, which requires that confinement shall be established whenever the reactor is not secured (see Section 5.3.4 of this SER). The NRC staff also finds that the specification helps ensure that the holdup time and leakage rates assumed in the analyses in the SAR as supplemented, are actually representative of the holdup time and leakage rate during reactor operations. Additionally, the NRC staff also finds that TS 4.4, Specification 1, helps limit the release of radioactive material from confinement to the environment, and that it is consistent with the guidance in NUREG-1537, Appendix 14.1, Section 4.4.1. Based on the information above, the NRC staff concludes that TS 4.4, Specification 1, is acceptable.

TS 4.4, Specification 2, specifies the surveillance frequency for the functional test of the ventilation system louvers. The NRC staff reviewed TS 4.4, Specification 2 and finds that the specification helps ensure that the ventilation system is operating in accordance with the analyses in the SAR and the LCO in TS 3.4, Specifications 2 and 3 (see Section 5.3.4 of this SER). The NRC staff also finds that TS 4.4, Specification 2, is consistent with the guidance in NUREG-1537, Appendix 14.1, Section 4.4.2. Based on the information above, the NRC staff concludes that TS 4.4, Specification 2, is acceptable.

Based on its review of the information above, the NRC staff finds that the licensee's radiation monitoring and surveying, including the equipment used and the surveillances performed on the equipment, is appropriate for detecting the types and intensities of radiation likely to be encountered within the facility at appropriate frequencies and will help ensure compliance with 10 CFR 20.1501(a) and (c). On the basis of the above, the NRC staff concludes that the radiation monitoring and surveying at the MUTR facility are acceptable.

3.1.5 Radiation Exposure Control and Dosimetry

The licensee described the MUTR radiation exposure control and dosimetry program in Section 11.1.5 of the SAR (Ref. 1), as supplemented by responses to RAIs (Refs. 4 and 5). Radiation exposure control depends on factors such as the facility's design features, operating procedures, training, and equipment. Radiation exposure control measures at the MUTR facility include shielding, ventilation (normally kept off during reactor operation), containment entry control, posting requirements, protective equipment, personnel dosimetry, and estimates of annual doses at various locations.

Reactor shielding is based on the combination of pool water and the concrete pool structure. With the N-16 diffuser in operation, radiation levels on the reactor bridge directly above the reactor are less than 10 mrem per hour (0.1 mSv per hour).

The regulations in 10 CFR 20.1502, "Conditions requiring individual monitoring of external and internal occupational dose," require monitoring of workers likely to receive, in 1 year from sources external to the body, a dose in excess of 10 percent of the limits described in 10 CFR 20.1201. Personnel whole body exposure is monitored by thermoluminescent dosimeters that are assigned to individuals who have the potential to be exposed to radiation. Visitors are issued temporary self-reading dosimeters after a brief orientation lecture on facility hazards by facility or Radiation Safety Office staff. The facility maintains records of visitors and visitor exposures. Dose rates from radiation fields are measured using survey meters, and those measured rates are posted where required. The licensee uses fixed dosimeters located

at strategic points to measure and evaluate dose rates from the radiation fields. These provisions help ensure that individual dose monitoring for all individuals required to be monitored meets the regulations in 10 CFR Part 20, and also helps the licensee meet the goals of the ALARA program. The licensee collects and maintains records of occupational exposure information using the appropriate NRC forms. TS 6.8.3, Specification 3, which is discussed and found acceptable in Section 3.1.2 of this SER, requires records of personnel monitoring to be retained for the lifetime of the facility.

The radiation safety officer uses portable equipment to perform weekly radiation surveys. Personnel protective equipment is used as needed. Facilities and equipment to decontaminate persons are available, if needed. Procedures exist to govern the use of this equipment.

The NRC staff reviewed the licensee's response to RAI No. 72 (Ref. 3), RAI Nos. 47 and 50 (Ref. 4), MUTR annual reports (Refs. 50 through 54), and NRC IRs (Refs. 44 through 48), and noted the following:

- Environmental doses, as measured by fixed dosimeters located throughout the facility and the campus, were being monitored and reviewed as appropriate.
- The highest dose recorded by a monitoring film badge inside the facility, as reported in annual reports (Refs. 50 through 54), was 2,746 mrem.
- Typical annual radiation exposures to workers are less than 100 mrem. As reported in annual reports (Refs. 50 through 54), all badged personnel exposures remained below 10 percent of the annual dose limits in 10 CFR Part 20. Additionally, doses to visitors, as recorded by pocket dosimeters, were minimal.
- Based on the information provided in the licensee's response to RAI No. 72 (Ref. 3), historical data from the environmental radiation monitors at the site boundary (on the east and west exterior walls of the reactor building) indicate average annual doses of approximately 87 mrem (0.87 mSv). However, these readings are not adjusted for naturally occurring background radiation. The readings at the facility's site boundary are statistically indistinguishable from readings from other areas that are not near the reactor, indicating that any dose from reactor operations (above background) was negligible.
- The highest calculated dose from Ar-41 in the unrestricted areas, as reported in annual reports (Refs. 50 through 54), was 0.2 mrem (0.002 mSv).
- The licensee's radiation protection program was effective in minimizing radiation doses to individuals through training, notices to workers, radiation monitoring, and surveys.
- Radiation monitoring equipment was being calibrated as required by procedure.

The NRC reviewed the information above, and finds that the appropriate equipment and procedures for radiation exposure control are in use at the facility. Occupational exposures are controlled through satisfactory radiation protection and ALARA programs and by the design of the facility, and historical radiation doses to the reactor staff and members of the public have been well below the applicable regulatory limits in 10 CFR Part 20. Therefore, on the basis of the information described above, the NRC staff concludes that the licensee's radiation exposure control and dosimetry practices are acceptable.

3.1.6 Contamination Control

The licensee described the MUTR contamination control program in Section 11.1.6 of the SAR (Ref. 1). The program includes written procedures for radioactive material handling, the use of trained personnel, and implementation of a monitoring program designed to detect contamination in a timely manner. The licensee generally performs contamination surveys on a monthly basis, depending on the frequency that radioactive material is used or handled. Use of radioactive material is restricted to certain areas of the facility, including the hot room, the reactor bridge, and the lower level of the reactor building. This greatly reduces the number of areas in the facility that could be contaminated as a result of an experiment or maintenance activity. Workers are required to wear protective gloves and other appropriate protective clothing when working in potentially contaminated areas. Workers are required to perform surveys before leaving a contaminated work area to ensure that no contamination remains present on hands, clothing, or shoes. Materials and tools are monitored for contamination and stored in marked drums in the facility or in storage containers in the hot room.

The NRC cited the MUTR for a Level IV violation of TS 6.4, Specification 2 (modified routine experiments), in 2010 (Agencywide Documents Access and Management System Accession No. ML111370016). During the event that resulted in this violation, one worker became contaminated and was successfully decontaminated. The licensee's procedures and radiological control capabilities were adequate to meet the extent of the contamination event. The licensee put corrective actions in place to prevent reoccurrence of the event. The NRC staff reviewed the non-routine IR and found that the NRC inspectors reviewed the licensee's proposed corrective actions related to the incident and found them to be acceptable.

The NRC staff reviewed the MUTR annual reports (Refs. 50 through 54) for information about other historical occurrences of radioactive contamination at the facility. The NRC staff notes that the inspections of the radiation protection program completed in 2011, 2013, and 2015 show the handling and storage of radioactive material and contaminated equipment to be in accordance with regulations and the licensee's written procedures, which helps to confirm that the contamination control program is effective. The NRC staff finds that SAR Section 11.1.6 discussing contamination control is consistent with the guidance in NUREG-1537, Section 11.1.6, and that there is reasonable assurance that facility staff and public health and safety and the environment will be protected. Based on the information above, the NRC staff concludes that the contamination control program at the MUTR facility is acceptable.

3.1.7 Environmental Monitoring

The licensee described the MUTR environmental monitoring program in Section 11.1.7 of the SAR (Ref. 1), as supplemented by responses to RAIs (Refs. 3, 4, 12, and 58). A number of fixed-location environmental monitors (film badges) are located on campus, outside the reactor building. Two of these monitors are used at the site boundary of the facility. In response to RAI No. 72 (Ref. 3), the licensee stated that there are environmental monitoring on the east and west exterior walls of the reactor building. The licensee also maintains additional monitors in the interior of the reactor building. As reported in NRC IRs (Refs. 44 through 48), the licensee's environmental doses, as measured by the fixed dosimeters located throughout the facility and the campus, have been monitored and reviewed as appropriate.

TS 3.5.1, “Radiation Monitoring System,” Specification 4 states the following:

Specifications

(…)

4. The campus radiation safety organization shall maintain environmental monitors at the greatest points of release.

TS 3.5.1, Specifications 1 through 3, are evaluated in Section 3.1.3 of this SER and found acceptable.

TS 3.5.1, Specification 4, requires the use of environmental monitors to measure the integrated radiation exposure around the environs of the facility. As discussed above, the licensee has environmental monitors located at the site boundary and at other locations on campus, which help measure any offsite dose due to reactor operation or from reactor effluents. In response to RAI No. 72 (Ref. 3), the licensee provided quarterly readings of monitors mounted at the site boundary. As discussed in Section 3.1.5 of this SER, historical data from the environmental radiation monitors outside the building, at the site boundary, show average readings of approximately 87 mrem (0.87 mSv) total effective dose equivalent per year. However, these readings are not adjusted for naturally occurring background radiation. The readings are statistically indistinguishable from readings from other areas that are not near the reactor, indicating that any additional dose (above background) at the site boundary from the reactor or its effluents was negligible.

The NRC staff reviewed TS 3.5.1, Specification 4, and finds that by requiring the collection of the environmental monitoring result, the specification helps ensure that the licensee monitors any public dose from the reactor to verify that the dose is below the public dose limit in 10 CFR 20.1301. The NRC staff also finds that TS 3.5.1, Specification 4, is consistent with the guidance in NUREG-1537, Appendix 14.1, Section 3.7.1. Based on the information above, the NRC staff concludes that TS 3.5.1, Specification 4, is acceptable.

TS 4.5.2, Specification 3, requires that the environmental monitors required by TS 3.5.1, Specification 4, be exchanged at least quarterly. TS 4.5.2, Specification 3, is discussed in Section 3.1.1 of this SER, and found acceptable.

TS 6.8.3, “Records to be Retained for the Lifetime of the Reactor Facility,” Specification 2, states the following:

(...)

2. Off-site environmental monitoring surveys required by the technical specifications,

(...)

TS 6.8.3, Specification 1, is evaluated in Section 3.1.2 of this SER and found acceptable.

TS 6.8.3, Specification 2, specifies that records of off-site environmental monitoring surveys required by the TSs shall be retained for the lifetime of the reactor facility. The NRC staff reviewed TS 6.8.3, Specification 2, and finds that it helps ensure that important records related to public doses are maintained, so that the records may be reviewed as appropriate and any

trends identified. The NRC staff also finds that the specification is consistent with the guidance in ANSI/ANS-15.1-2007, Section 6.8.3, and helps the licensee comply with the public dose records retention requirements in 10 CFR 20.2107. Based on the information above, the NRC staff conclude that TS 6.8.3, Specification 2, is acceptable. (Section 5.6.8 of this SER further discusses the records that must be retained for the lifetime of the facility.)

TS 6.8.3, Specification 3, is evaluated in Section 3.1.2 of this SER and found acceptable.

TS 6.8.3, Specifications 4 and 5, are evaluated in Section 5.6.8.3 of this SER and found acceptable.

The NRC staff reviewed the information in the SAR, as supplemented; the licensee's annual reports (Refs. 50 through 54); NRC IRs (Refs. 44 through 48); TS 3.5.1, Specification 4; and TS 6.8.3, Specification 2. The NRC staff notes that Section 5 of the annual reports addresses the environmental monitoring locations inside the reactor building. NRC health physics inspections indicate that the licensee adequately maintains environmental monitoring records for the fixed dosimeters located throughout the facility and the campus, and that radiation doses are being monitored and reviewed as appropriate to help ensure compliance with 10 CFR Part 20 dose limits. The NRC staff finds that the environmental monitoring program helps to assess and provide an early indication of any environmental impact caused by the reactor facility operation. Based on the information above, the NRC staff concludes that the licensee's environmental monitoring program is acceptable.

3.2 Radioactive Waste Management

The purpose of the radioactive waste management program is to ensure that radioactive waste materials are identified, assessed, controlled, and disposed of in conformance with all applicable regulations and in a manner to protect public health and safety and the environment.

3.2.1 Radioactive Waste Management Program

The licensee described the MUTR radioactive waste management program in Section 11.2.1 of the SAR (Ref. 1). The objectives of the MUTR radioactive waste management program are to minimize and properly handle, store, and dispose of waste. The MUTR segregates dry solid waste by type and isotopic content. Wastes must be segregated at the reactor facility into categories of dry solid low-level radioactive waste sharps; biological materials; aqueous wastes; mixed low-level radioactive waste; sealed and unsealed commercial sources; and scintillation cocktails, solutions, and vials. Additional separation is performed at the reactor facility for isotopes of phosphorous, sulfur, and carbon and tritium together; other isotopes are kept separate from those just mentioned. UMD's Department of Environmental Safety, Sustainability, and Risk requires that all waste from facilities be appropriately packaged and the isotopic content of the waste properly identified.

The NRC staff reviewed the information above, and also reviewed the MUTR radioactive waste management program during site visits conducted in 2012. The onsite review and the review of the SAR, Section 11.2.1, confirmed that acceptable controls are in place to prevent uncontrolled personnel exposures from radioactive waste operations and provide the necessary accountability to prevent unauthorized release of radioactive waste. Based on the information provided above, the NRC staff concludes that the MUTR radioactive waste management program is acceptable.

3.2.2 Radioactive Waste Controls

The MUTR radioactive waste controls are described in the SAR, Section 11.2.2 (Ref. 1), as supplemented by response to RAIs (Refs. 3 and 55). Trends expected from the actual releases of airborne, liquid, and solid waste from the facility were evaluated. Liquid waste from normal MUTR operations is collected in the reactor sump. The sump has sufficient capacity for holdup to allow for radioactivity to be reduced by normal decay or to add fresh water for dilution. No release from this sump to the sanitary system is allowed until an analysis of the radioactivity content is made and it is deemed acceptable for release. The sump is emptied approximately every 3 to 5 years with a total volume of approximately 200 liters (50 gallons). Solid waste from laboratory experiments, disposable protective clothing items, activated equipment, and activated irradiation samples are segregated into marked containers. The containers are sealed and then transferred to UMD's Department of Environmental Safety, Sustainability, and Risk for final disposition. Radioactive items stored outside the pool are stored in the pump room to provide additional assurance that doses to facility personnel are ALARA. Activated equipment and activated irradiation samples are stored in the reactor bay area for reuse or to decay to low-level activity limits.

The NRC staff reviewed the information above, and also reviewed the MUTR annual reports (Refs. 50 through 54), and finds that the liquid waste reactor storage sump has not been discharged recently. Based on its review of the information in SAR Section 11.2.2, as described above, the NRC staff finds that the MUTR facility has adequate radioactive waste controls in place to monitor the radiation exposure from radioactive waste, perform required handling operations, and prepare proper documentation for the transfer of waste to offsite disposal sites. Based on the information above, the NRC staff concludes that the licensee's radioactive waste controls are acceptable.

3.2.3 Release of Radioactive Waste

The licensee described the release of radioactive waste from the MUTR in Section 11.2.3 of the SAR (Ref. 1), as supplemented by responses to RAIs (Ref. 2). Low-level solid waste that decays to conform with free release criteria is disposed of as industrial waste. Other solid waste is transferred to UMD's Department of Environmental Safety, Sustainability, and Risk for storage and ultimate disposal under a separate material license. Liquid radioactive waste from the reactor sump is released to the sanitary sewer system in accordance with the approved discharge permit after it has been sampled for compliance with 10 CFR Part 20 guidelines. As discussed in Section 3.1.1 of this SER, liquid wastes from experiments are rare, but when they are generated, they are either disposed of by sump dilution or transferred to the Department of Environmental Safety, Sustainability, and Risk for disposal. All releases are governed by written procedures to ensure that they are within the limits stated in 10 CFR Part 20, Appendix B, Table 3. Fresh water can be added to the retention tank if dilution is necessary before discharge of liquid radioactive waste.

Annual reports provided to the NRC (Refs. 50 through 54) do not indicate any recent liquid radioactive effluent releases. Observations reported in NRC IRs (Refs. 44 through 48) document that radioactive waste is transferred from the reactor license to the campus license and processed under the campus broad-scope license.

The NRC staff reviewed the MUTR annual reports (Refs. 50 through 54), NRC IRs (Refs. 44 through 48), and SAR Section 11.2.3, and finds that the licensee controls or minimizes releases of radioactive material into the environment, such that applicable criteria in

10 CFR Part 20 are met. Based on its review of the information above, the NRC staff concludes that the release of radioactive waste from the MUTR facility is acceptable.

3.3 Conclusions

On the basis of its review of the information presented in the SAR, as supplemented, observations of the licensee's operations, review of the licensee's annual operating reports, and the results of the NRC inspection program, the NRC staff concludes the following:

- The MUTR radiation protection program complies with the requirements in 10 CFR 20.1101(a) and 10 CFR 20.1101(c), is acceptably implemented, and provides reasonable assurance that the facility staff, the environment, and the public are protected from unacceptable radiation exposures. The radiation protection staff has adequate lines of authority and communication to implement the program (the NRC staff evaluated in Section 5.6.1 of this SER and found acceptable.

- The systems provided for the control of radiological effluents, when operated in accordance with the TSs, are acceptable to ensure that releases of radioactive materials from the facility are within the limits of the NRC's regulations and are ALARA.

- The MUTR ALARA radiation protection program complies with the requirements of 10 CFR 20.1101(b) and follows the guidelines in ANSI/ANS-15.11-1993 (R 2004), implementing the use of time, distance, and shielding to reduce radiation exposures. The staff's review of the history of radiation doses and current controls for radioactive material in the MUTR facility provides reasonable assurance that radiation doses to the environment, the public, and facility personnel will be ALARA.

- The radiation monitoring and surveying program at the MUTR facility helps ensure compliance with 10 CFR 20.1501. The results of radiation surveys carried out at the MUTR facility, doses to the persons issued dosimetry, and results of the environmental monitoring program help confirm that the radiation protection and ALARA programs are effective.

- Potential radiation sources and effluents are acceptably identified, characterized, described, and controlled.

- Facility design and operational procedures limit the production and release of Ar-41 and N-16 and control the potential for radiation exposures to the facility staff and the public. Conservative calculations of the quantities of these gases released into restricted and unrestricted areas give reasonable assurance that doses to the MUTR staff and the public will be below applicable 10 CFR Part 20 limits.

- The facility radioactive waste management program provides reasonable assurance that radioactive waste released from the facility will neither exceed the limits in applicable regulations nor pose an unacceptable radiation risk to the environment and the public.

The NRC staff reviewed the MUTR radiation protection program and radioactive waste management program as described in the SAR, as supplemented. The NRC staff finds that the licensee implemented adequate and sufficient measures to minimize radiation exposure to workers and the public. Furthermore, the NRC staff concludes that there is reasonable assurance that the MUTR radiation protection and waste management programs will provide acceptable radiation protection to the workers, the public, and the environment.

4 ACCIDENT ANALYSES

4.1 Accident-Initiating Events, and Scenarios

The accident analysis presented in the safety analysis report (SAR) Chapter 13, as supplemented, for the Maryland University Training Reactor (MUTR) helped establish safety limits (SLs) and limiting safety system settings (LSSSs) that are imposed on the MUTR through the technical specifications (TSs). The licensee analyzed potential reactor transients and other hypothetical accidents. The licensee also analyzed the potential effects of natural hazards as well as potential accidents involving the operation of the reactor. The U.S. Nuclear Regulatory Commission (NRC) staff reviewed the licensee's analytical assumptions, methods, and results. In addition, the NRC staff performed independent calculations and obtained independent analysis of accidents involving other Training, Research, Isotopes, Production, General Atomics (TRIGA) reactors (Refs. 33 and 34) and compared those results with accidents analyzed by the licensee. The TSs limit steady-state operations below the bounds established for the safe operation of the MUTR, and none of the potential accidents considered in the SAR would lead to significant public exposure.

NUREG-1537, "Guidelines for Preparing and Reviewing Applications for the Licensing of Non-Power Reactors," issued February 1996 (Ref. 23), recommends that licensees consider the applicability of each of the following accident scenarios:

- maximum hypothetical accident (MHA)
- insertion of excess reactivity
- loss-of-coolant accident (LOCA)
- mishandling or malfunction of fuel
- loss-of-coolant-flow accident
- experiment malfunction
- loss of normal electrical power
- external events
- mishandling or malfunction of equipment

4.1.1 Maximum Hypothetical Accident

The licensee described the MHA in Section 13.2.1 of the SAR (Ref. 1), as supplemented by responses to requests for additional information (RAIs) (Refs. 9, 10, 13, 18, 41, 43, and 58). The MHA is the bounding accident that involves the release of fission products. The MUTR MHA is based on a single fuel element cladding failure in air in the reactor bay. The MHA scenario assumes the instantaneous release of the noble gas, iodine, cesium, and strontium fission products directly into the reactor bay without decay. The licensee developed the boundary conditions and assumptions using guidance from NUREG/CR-2387, "Credible Accident Analyses for TRIGA and TRIGA-Fueled Reactors," issued April 1982 (Ref. 33), with scaled, saturated inventories used for all released isotopes, and no credit for iodine absorption in the reactor bay or filtration removal by the heating and ventilation system. The NRC staff finds that the bounding fuel element assumption is acceptable because the licensee stated, in response to RAI No. 2b (Ref. 16), that the calculated fuel element power peaking factor is 1.6, which is less than the conservative power peaking factor value of 2 described in NUREG/CR-2387 and used in the MUTR MHA.

Procedures in the MUTR emergency plan (Ref. 49) state that in the event of experiment or fuel element cladding failure involving significant radiological releases, corrective actions will be taken. The reactor will be shutdown, the ventilation system secured (if in operation; however, the ventilation system is not normally operating during reactor operation), and the reactor building or affected areas will be evacuated by voice order and the building evacuation alarm.

The licensee performed the following dose analyses for the MHA with the reactor bay ventilation system secured (i.e., fans shut down and louvers closed):

- The licensee calculated the occupational dose inside the reactor bay to a member of the operating staff for an assumed 5-minute evacuation period. This dose results from inhalation of, and submersion in, radioactive isotopes.

- The licensee calculated the dose to a maximally exposed member of the public, which the licensee determined would be in room 1398, a hallway on the south side of the reactor bay, which is an unrestricted area inside the Chemical and Nuclear Engineering Building. For approximately 10 percent of the year (876 hours) atmospheric conditions make leakage into room 1398 possible. When the conditions that allow leakage into room 1398 exist, 38 percent of the total leakage from the reactor bay is into room 1398 (the remaining leakage is into other locations other than the door between the reactor bay and room 1398, is approximately 22 percent or less). The member of the public is assumed to be present during the time leakage occurs into room 1398, and for the entire duration of the MHA (the duration and the exposure time is 76 hours, because it would take 76 hours for the effluents in the reactor bay to completely leak out; although it is unlikely that an individual would be located in room 1398 for 76 continuous hours, the licensee conservatively assumed this would be the case). This dose results from leakage of radioactive gases from the reactor bay into room 1398, resulting in an inhalation and submersion dose, and direct radiation (shine) from the radioactive isotopes suspended in the reactor bay.

- The unrestricted area nearest to the reactor and outside the Chemical and Nuclear Engineering Building, in which a member of the public could be located, is at the site boundary fence to the north side of the reactor bay. However, the licensee states that the maximally exposed member of the public would not be at this location, but would be in room 1398, as discussed above. The licensee performed analyses to support this determination, but did not provide details of these analyses. Therefore, the NRC staff's confirmatory calculations, which are discussed below, include calculations at the site boundary fence line to confirm the licensee's position.

As stated above, the MHA is based on a single fuel element cladding failure in air in the reactor bay. The analysis is based on the following assumptions:

- The licensee has adjusted the source terms used in NUREG/CR-2387 to reflect the assumption that the reactor had been operating for a year at a thermal power level of 250 kilowatts (kWt), the maximum authorized power level, and all fission products had reached their saturated activity (a conservative assumption, considering the average facility utilization factor is less than 2 percent). The typical energy generation of the MUTR is 30 megawatt-hours per year or less, so no operations observed to date at the MUTR would have resulted in a saturated fission product inventory. However, there is no limitation on hours of operation in the license.

- The licensee's analysis conservatively assumed that the fission product inventory per fuel element is proportionally the same for both the MUTR (which has 93 fuel elements), and the typical TRIGA reactor (which has 50 fuel elements) considered in NUREG/CR-2387 (Ref. 33). The NRC staff compared the assumed fission product inventory with similar low-enriched-uranium (U)-fueled TRIGA reactors and finds that the inventory available for release was comparable after adjusting for differences in reactor power.

- The analysis assumed a fission product release fraction of 1.5×10^{-5} of the inventory of noble gases, iodines, and particulates (strontium and cesium). The NRC staff finds that, for noble gases and iodines, this value is appropriate for nonpulsing TRIGA fuel operated at temperatures below 400 degrees Celsius (°C) (752 degrees Fahrenheit (°F)). The NRC staff notes that for particulates, this value is overly conservative, given that the particulates are nonvolatile. Any fraction released would be much smaller than for noble gases and iodines, and consequently the dose contribution from the particulates would be small. Therefore the NRC staff did not consider the dose contributions from strontium and cesium in its confirmatory calculations, which are discussed below.

- The analysis assumed no radioactive decay during the time between reactor shutdown and accident initiation (i.e., it was conservatively assumed that the accident occurred immediately following shutdown). The licensee accounted for radioactive decay following accident initiation in its calculations of occupational and public doses.

- All of the noble gases, iodines, and particulates (strontium and cesium) released from the fuel element gap were assumed to be available for release to the environment (plate out was not assumed).

- The ventilation fans are off and louvers are closed in accordance with normal operating practices. The airborne radioactive isotopes are released into room 1398 through building leakage, based on conservative atmospheric assumptions. The licensee calculated the dose in room 1398 based on average radionuclide concentrations in room 1398 over the 76-hour exposure period, considering that radionuclides would also decay and leak out of room 1398 in conjunction with their leakage into room 1398.

- All of the reactor bay air containing the radioactive gases is available for release to the environment.

- A 5-minute evacuation time was assumed for staff (radiation workers) in the reactor bay.

- A 76-hour stay time was assumed for members of the public in Chemical and Nuclear Engineering Building room 1398. The licensee analyzed this scenario for identifying the maximum exposed individual.

- The licensee evaluated scenarios at the site boundary fence approximately 6.1 meters (m) (20 feet (ft)) north of the reactor bay, in order to determine that the dose to a member of the public at that location over the duration of the event (76 hours) would be less than that to the exposed individual in room 1398.

- Although the licensee conservatively assumed that members of the public exposed to radiation or radioactive material from the MHA would be present in the unrestricted areas evaluated for the entire duration of the MHA, the licensee stated in response to RAI No. 4 (Ref. 58) that individuals would not remain in locations directly outside of confinement for the

duration of an MHA. Reactor staff, Radiation Safety Office support personnel, and local response agency personnel would work together to secure and maintain acceptable perimeters relative to exposure and dose measurements surrounding the facility.

In response to RAI No. 4 (Ref. 58), the licensee determined the committed effective dose equivalent (CEDE) (internal dose from inhalation of airborne radioactive material), the deep-dose equivalent (DDE) (external dose from submersion in airborne radioactive material), and the total effective dose equivalent (TEDE) for reactor staff in the reactor bay. The licensee also determined the CEDE (internal dose from inhalation of airborne radioactive material), the shine DDE (external dose from the radioactive isotopes suspended in the reactor bay), the DDE (external dose from submersion in airborne radioactive material), and the total effective dose equivalent (TEDE) for members of the public in room 1398. These doses are summarized in Table 4-1. The licensee stated that the calculated total exposures (TEDEs) are below the applicable limits given in 10 CFR 20.1201, "Occupational dose limits for adults" (5,000 millirem (mrem) (50 millisievert (mSv) TEDE for occupational workers), and 10 CFR 20.1301, "Dose limits for individual members of the public" (0.1 roentgen equivalent man (rem) (100 mrem) (1 mSv) TEDE for members of the public). Even if it is conservatively assumed that a member of the public could also be in the reactor bay for the 5-minute evacuation period assumed for the reactor staff, his or her dose will also be well within the 100 mrem (1 mSv) public dose limit in 10 CFR 20.1301.

Table 4-1 MHA Dose Values (mrem)

Location	Licensee Calculations				NRC Staff Calculations				10 CFR Part 20 Limits
	CEDE	Shine DDE	DDE	TEDE	CEDE	Shine DDE	DDE	TEDE	
Occupational dose, reactor bay	10.2	—	1.62	11.8	5.98	—	1.19	7.17	5,000
Public dose, room 1398	88.5	7.33	2.78	98.6	62.7	11.8	12.2	86.7	100
Public dose, fence	—	—	—	<98.6	68.9	0.42	13.7	83.0	100
Public dose, nearest residence	—	—	—	<98.6	0.05	—	0.01	0.06	100

The NRC staff performed confirmatory calculations to demonstrate the validity of the licensee's computational models, codes, and assumptions. The results of the NRC staff confirmatory calculations are shown in Table 4-1 alongside the results of the licensee's calculations. The NRC staff confirmatory calculations are described as follows:

- The NRC staff performed its calculations using the licensee's source term based on NUREG/CR-2387, except that cesium and strontium isotopes were not considered in the NRC staff calculations, as discussed above.

- The NRC staff used inhalation and submersion dose factors from Federal Guidance Report (FGR) No. 11, "Limiting Values of Radionuclide Intake and Air Concentration and Dose

Conversion Factors for Inhalation, Submersion, and Ingestion," and FGR No. 12, "External Exposure to Radionuclides in Air, Water, and Soil" (Refs. 98 and 99).

- The NRC staff's calculation of occupational doses in the reactor bay did not take credit for any decay or leakage of radionuclides from the reactor bay over the 5-minute stay time.

- The NRC staff's calculation of public doses (CEDE and DDE) in room 1398 considered the leakage from the reactor bay into room 1398 over the 76 hour period, and also considered the leakage rate from 1398 (approximately 0.00167 air changes per second, as discussed in SER Section 3.1.1). Additionally, the NRC staff calculation for room 1398 considered radioactive decay over the 76 hour period.

- As discussed above, the NRC staff also performed a calculation of the public doses (CEDE and DDE) at the site boundary fence approximately 6.1 m (20 ft) to the north of the reactor bay, in order to confirm the licensee's determination that the highest public dose would occur in room 1398. The NRC staff assumed a plume model, and a ground-level release of radioactive material from the reactor bay (due to leakage from the reactor bay rollup door). Atmospheric dispersion parameters for distances less than 328 ft (100 m) are extrapolated, and a conservative Pasquill category F atmospheric stability condition with a wind speed of 1 m per hour is assumed. The calculation took credit for building wake effects and plume meander. Based on information provided in a RAI response (Ref. 43), the NRC staff assumed that when atmospheric conditions allow air to leak from the reactor bay through the rollup door, 44 percent of the total air leakage is through the rollup door (the remaining leakage is into other locations; for these atmospheric conditions, the leakage from any other individual reactor bay penetration, besides the rollup door, is approximately 14 percent or less). The NRC staff also assumed, based on response RAI No. 1a (Ref. 43), that it takes 7.4 hours for all radioactive material to leak from the building. No credit was taken for radioactive decay over this 7.4 hour period. The receptor was assumed to remain at the fence location for the entire 7.4 hour period it takes the radioactive plume to pass.

- The licensee's calculations did not include an estimate of the dose at the nearest residence to the facility, which is a residence hall approximately 230 m (755 ft) from the facility. The NRC staff notes that given the assumptions used for the NRC staff calculation of public dose at the fence (particularly the ground release assumption), the dose at the nearest residence would be bounded by the dose at the fence. However, to show how the dose at the nearest residence would compare to the dose 10 m (32.8 ft) from the release point, the NRC staff performed a calculation of the public MHA dose (CEDE and DDE) at the nearest residence (except for the receptor location, the parameters and assumptions are the same as those used for the fence dose calculation discussed above).

- The NRC staff performed a confirmatory calculation of the shine DDE for room 1398, and also calculated the shine DDE at the fence, such that the TEDE (CEDE plus DDE plus shine DDE) for these locations could be calculated. (The shine DDE at the nearest residence is negligible, given the large distance from the facility, and was not calculated.) The NRC staff's external shine DDE calculations used the MicroShield 10.0 computer code, modelling the reactor bay as a rectangular volume, and considering the radioactive material released to the reactor bay to be uniformly distributed throughout the volume. No credit was taken for the shielding provided by the building walls, rollup door, or door to Room 1398. A 76-hour exposure time was used for the room 1398 calculation, and a 7.4 hour exposure time was used for the fence calculation, consistent with the time it would take for all material to leak

out of the reactor bay during conditions that would cause material to leak to each of the locations considered. Credit was taken for radioactive decay over the exposure times; however, no credit was taken for the gradual reduction in material concentrations in the reactor bay over the leakage period (i.e., all of the leakage was assumed to occur instantaneously at the end of the leakage period).

The NRC staff confirmatory calculations show good general agreement with the licensee's dose calculations; the differences are due to differences in the methodologies and assumptions used. The NRC staff calculations for the public dose at the fence are less than those for room 1398, confirming the licensee's determination that the maximally-exposed member of the public would be in room 1398. The calculations also show that the public dose at the nearest residence is small and much lower than the public doses in room 1398 or at the fence. Similarly to the licensee's calculations, the NRC staff calculations show occupational and public doses that are below the 5,000 mrem (50 mSv) occupational dose limit in 10 CFR 20.1201, and the 100 mrem (1 mSv) public dose limit in 10 CFR 20.1301, respectively.

The NRC staff reviewed the licensee's MHA analysis, as described in SAR Section 13.2.1, as supplemented by responses to RAIs. The NRC staff finds that the licensee's analyses used qualified methodologies with an acceptable radionuclide source term from NUREG/CR-2387, and incorporated conservative or justifiable assumptions on other boundary conditions. As discussed above, the NRC staff also performed independent confirmatory calculations of the occupational and public doses from the MHA. The NRC staff finds that the results of the licensee- and NRC-performed calculations demonstrate that the maximum occupational and public radiation exposures for the MHA are within the occupational dose limits in 10 CFR 20.1201 and the public dose limit in 10 CFR 20.1301. Therefore, based on the information above, the NRC staff concludes that the results of the MUTR MHA are acceptable.

4.1.2 Insertion of Excess Reactivity

The licensee described the insertion of excess reactivity in Sections 13.1.2 and 13.2.2 of the SAR (Ref. 1), as supplemented by responses to RAI Nos. 59 and 84 (Refs. 11 and 12). The licensee provided its method for analyzing possible reactivity insertion events, which included a change in an experimental facility, step insertion of the most reactive fuel element bundle, and control rod withdrawal. Calculations by General Atomics predicted and experimental measurements confirmed that uranium-zirconium hydride ($U\text{-}ZrH_x$) fuel exhibits a strong, prompt, negative temperature coefficient of reactivity (Ref 31). This temperature coefficient not only can terminate a nuclear excursion but also causes a loss of reactivity as the temperature of the fuel is raised. These results have been confirmed at many operating TRIGA reactors. (Section 2.5 of this safety evaluation report (SER) provides further discussion of nuclear design.) The licensee concluded that there was no credible means by which the control rods or a fuel element bundle could be manipulated to promptly add reactivity without violating several TS conditions and procedures.

<u>Rapid Insertion of Reactivity</u>

The licensee performed an insertion of fuel analysis in SAR Section 13.2.2.3 as supplemented by responses to RAI Nos. 59, 60, and 61 (Ref. 11).

(1) For determining the credible rapid insertion of excess reactivity, the licensee made the following assumptions for the dropping of a fuel bundle and experiment simultaneously into a core vacancy:

- Rapid insertion of a fuel bundle in the most reactive core grid plate position would render a $1.40 pulse, the nominal value for excess reactivity.

- Reactive worth of any single experiment is $1.00, as defined by TS 3.6, Specification 1.

- Rapid inadvertent insertion of an experiment and fuel bundle is the maximum credible positive reactivity addition. The reactivity worth of the pulse is $2.40, the combined value of the experiment and fuel bundle.

- Rapid inadvertent insertion of an experiment and fuel bundle was not done at $2.40 (combined value of the experiment and fuel bundle), but was conservatively analyzed at $2.50.

(2) For determining a hypothetical rapid insertion of excess reactivity, the licensee made the following assumptions for the dropping of a fuel assembly into a core vacancy:

- Initial power levels 0.01 kWt and 250 kWt were both analyzed,

- Excess reactivity in the reactor is limited to $3.50, NRC staff note that in a conversation of record (Ref. 100, and 101) the licensee reduced TS 3.1, Specification 1 from $3.50 to $1.12.

- A hypothetical rapid inadvertent insertion of reactivity was analyzed at $3.70.

The reactor excess reactivity is $1.40. Adding the excess reactivity combined with the highest valued experiment would introduce a pulse less than $2.50. The licensee's analysis shows that a reactivity insertion of $2.50 would result in a peak fuel temperature of 486 °C (907 °F). A hypothetical reactivity addition accident of $3.70 added at 0.01 kWt and 250 kWt power levels corresponds to peak fuel temperatures of 692 °C (1,278 °F) (0.01 kWt) and 988 °C (1,810 °F) (250 kWt). The licensee stated that this hypothetical accident is nonphysical because no core grid plate positions are available within the core region to insert an additional fuel bundle or experiments, as stated in the assumptions. (Section 2.5.1 of this SER further discusses reactor core reactivity.)

The NRC staff reviewed SAR Section 13.2.2.3 and responses to RAI Nos. 59, 60, and 61 (Refs. 11) and finds that the proposed accident is conservative because movement of fuel or rearrangement of the core is administratively prohibited while the reactor is operating, and administrative experimental controls help ensure this scenario from occurring. The NRC staff also finds that during the hypothetical transient, 0.66 megawatt-seconds of energy was deposited in each fuel element, raising its maximum temperature to 988 °C (1,810 °F). Because this temperature is lower than the SL temperature of the fuel cladding (1,000 °C (1,832 °F)), fuel integrity would not be lost. Therefore, this accident would not result in the release of any fission products from the primary barrier. Based on the information provided above, the NRC staff finds the rapid insertion of reactivity accident to be acceptable.

<u>Ramp Insertion of Reactivity</u>

In SAR Section 13.2.2.2 and in response to RAI No. 84 (Ref. 12), the licensee provided an analysis for the inadvertent withdrawal of the control rods and an unplanned increase in reactor power. In SAR Section 13.2.2.2 the reactivity addition rate of the three control rods is $0.16 per

second. However TS 3.2, Specification 2, limits all reactivity by control rod motion to less than $0.30 per second. The licensee considered four scenarios that would add reactivity to the reactor at a rate of $0.30 per second. The total reactivity available in the analyses for insertion is $1.12. In a conversation of record (Ref. 100) the licensee stated the current excess reactivity of the core is about $0.80, which is less than $1.12. The reactivity analysis bounds the excess reactivity allowed in the reactor by TS 3.1, Specification 1.

The first accident scenario assumes the reactor is operating at a power of 1 millliwatt, and both the power level scram and reactor period scram are assumed to be operable. In this scenario it is assumed that the period scram would terminate the reactivity action. Including trip level uncertainties and 1 second rod-drop delay, the maximum reactor power would be 0.00304 kWt.

The second accident scenario assumes the reactor is operating at a power of 1 millliwatt. The power level scram is assumed to be operable and reactor period scram is assumed to be inoperable. In this scenario it is assumed that the period scram that would normally terminate the reactivity addition (as in the first scenario above) fails and that the high power scram terminates the event. Including trip level uncertainties and 1 second rod-drop delay, the maximum reactor power would be 303.15 kWt.

The third accident scenario assumes the reactor is operating at various power levels between 10 milliwatts to 100 watts. In this scenario there is insufficient excess reactivity in the core to increase power on a reactor period that would trip the period scram and terminate the reactivity addition. The high power scram terminates the event. Including trip level uncertainties and 1 second rod-drop delay, the maximum reactor power would be less than the fourth scenario.

The fourth accident scenario assumes the reactor is operating at various power levels between 10 milliwatt to 100 watts. In this scenario there is insufficient excess reactivity in the core to increase power on a reactor period that would trip the period scram, the high power level scram that would terminate the reactivity addition fails, and the high fuel temperature scram terminates the event. Including trip level uncertainties and 1 second rod-drop delay, the maximum reactor power would be less than 340 kWt.

Table 4-2 Insertion of Excess Reactivity Scenarios

Scenario	Initial Power Level	Scram	Highest Power Level (kWt)
1	1 milliwatt	Short Period	0.00304
2	1 milliwatt	High Power	303.15
3	10 milliwatts to 100 watts	High Power	<340
4	10 milliwatts to 100 watts	High Temperature	340

The NRC staff reviewed SAR Section 13.2.2.2 and the licensee's response to RAI No. 84 (Ref. 12) and finds that the analyses of the inadvertent withdrawal of the control rod, including trip level uncertainties and rod-drop delays, show that the period scram, power scram, and fuel temperature scram terminate the power increase before the reactor power reaches 340 kWt. The thermal-hydraulic analysis shows that the energy deposited in the instrumented fuel element at location D8 at the LSSS of 175 °C (347 °F) would not raise the peak temperature in

the hottest fuel element above 308 °C (586 °F). Because this temperature is lower than the SL temperature for fuel cladding (1,000 °C (1,832 °F)), fuel integrity would not be lost. Based on the information provided above, the NRC staff finds the licensee's scenario for the inadvertent withdrawal of the control rods to be acceptable.

Improper or Unexpected Movement of Experiments

SAR Section 13.2.2.1 describes changes in experimental facilities. The licensee analyzed the reactivity associated with the various experimental facilities and determined that a flooded beam port is the most credible accident. That scenario would insert $0.70 positive reactivity through an experiment malfunction.

The NRC staff reviewed SAR Section 13.2.2.1 and finds that, based on the credible rapid insertion of excess reactivity above, the scenario involving the insertion of excess reactivity addition from improper or unexpected experiment movements is bounded and acceptable.

Conclusion

Theoretical calculations have predicted and experimental measurements have confirmed that uranium-zirconiun hydride (U-ZrH_x) fuel exhibits a strong, prompt, negative temperature coefficient of reactivity. This temperature coefficient not only can terminate a nuclear excursion but also causes a loss of reactivity as the steady-state temperature of the fuel is raised. These results have been confirmed at many operating TRIGA reactors. (Section 2.5 of this SER provides further discussion of nuclear design.) The NRC staff finds that the MUTR has sufficient safety systems, administrative controls, and TS limits to prevent reactivity additions greater than that in TS 3.1, Specification 1. If the instantaneous addition analyzed in the hypothetical accident would occur, the prompt, negative temperature coefficient of reactivity intrinsic to U-ZrH_x fuel will terminate an event before the TS SL of 1,000 °C (1,832 °F) would be exceeded.

4.1.3 Loss-of-Coolant Accident

The licensee described the LOCA in Section 13.2.3 of the SAR (Ref. 1), as supplemented by responses to RAIs (Refs. 11, 13, 55, and 96). The licensee also described protective actions that could be used during a potential LOCA in the emergency plan (Ref. 49). The licensee identified two possible scenarios for the loss of coolant—(1) willful drainage and (2) failure of beam tube or through tube gaskets. Pumping or draining all of the coolant water in the pool from installed components is not possible. In response to RAI Nos. 19 and 40 (Ref. 55 and 96), the licensee stated that all piping in the pool is limited to 29 inches (73.66 centimeters) below a referenced point, and siphon breaks are installed on all piping extending greater than that referenced point. The licensee stated that the facility design, limiting conditions for operation, and surveillance requirements include provisions to provide assurance that 15 ft (4.57 m) of water will be maintained above the top of the core, should there be any malfunction. To maintain the pool water level, corrective actions in the emergency plan require a search for the source of the leak and an assessment to determine if the loss rate is within the capabilities of the normal and emergency makeup water system. All available means to establish and maintain a standing water level in the pool would be taken, including, if necessary, having the University of Maryland Fire Department supply water to the pool. In the event the radiation/radiological conditions become more severe the reactor building or affected areas within the Chemical and Nuclear Engineering Building shall be evacuated by voice order and/or building evacuation alarm.

Either before reactor startup, or during reactor operation, the facility staff and reactor operators would be notified of a low level condition by the pool level detector or, if sufficient level is lost, by activation of the area radiation monitors. In response to RAI Nos. 62 and 4 (Ref. 11, and 96), the licensee stated that audible alarms annunciate at the entrances of the controlled areas, and normal security patrols would contact the Director and other management personnel. In response to RAI No. 14 (Ref. 55), the licensee stated that the longest period a leak could go undetected would be the 10 days during which the university is closed during the annual winter holiday break. In response to RAI Nos. 2 and 4 (Ref. 96), the licensee provided the following discussion on aspects of the facility design that prevent or mitigate the consequences of coolant leakage. In the event of heat exchanger malfunction which results in primary pressure being greater than the secondary coolant system, the heat exchanger could be isolated from the city water supply by manipulating the valves as shown in SAR Figure 5.2 and 5.3 (Ref. 1). In the event of pool or other malfunctions which could cause a coolant leak, the coolant would drain into the moat surrounding the reactor and into an epoxy coated concrete tank (the sump) with an approximate volume of 1,200 gallons. At a hypothetical leak rate of 120 gallons per day, the sump would become full after 10 days. After the sump has filled it would overflow, which may create the potential for release to the environment. However, the licensee stated in response to RAI No. 4b (Ref. 96) that in the event that this occurred, the overflow could be immediately released to the sewer, because the pool coolant contains no radionuclides in concentrations higher than the values presented in 10 CFR Part 20 “Standards For Protection against Radiation,” Appendix B, Table 3.

The licensee analyzed a hypothetical loss-of-coolant scenario in which all primary coolant is lost instantaneously. The licensee stated that calculations and experiments performed by General Atomics (for 1-megawatt TRIGA reactors) show that the removal of decay heat by natural air circulation would be adequate to prevent fuel damage in TRIGA reactors. The maximum TRIGA reactor fuel temperature for a scenario in which all coolant was lost would be below 850 °C (1,562 °F). If cladding temperature is greater than 500 °C (as would be the case for a LOCA with air cooling), General Atomics has determined that cladding integrity will be maintained if fuel temperature is at or less than 950 °C. Because the maximum fuel temperature is below the 950 °C temperature limit, the NRC staff concludes that the fuel cladding integrity will be maintained during a LOCA. (Section 2.5.3 of this SER provides further discussion of the SL.)

During the course of a LOCA, if the reactor core becomes completely uncovered, the decay fission products would constitute an unshielded gamma-ray source from the exposed core. Therefore, the licensee provided an analysis of dose rates at selected locations following a complete LOCA. The licensee stated that its estimates of the unshielded gamma ray source dose rates are conservatively based on calculations analyzing TRIGA elements after prolonged operation at a power level of 1-megawatt, despite the fact that operation of the MUTR is limited to 250 kWt. The MUTR staff could be located on the bridge, with direct core exposure and indirect exposure from scattered radiation; or, on the experimental floor near the biological shield, with exposure primarily from scattered radiation only. The shortest distance a member of the public could be present would be 8.28 m (27.2 ft) from the biological shield, outside the rollup door, at the site boundary fence. The licensee’s calculations for a member of the public at this location ignore the radiation shielding provided by the building or rollup door. The licensee estimated the dose rates at 1 hour and 8 hours following reactor shutdown (i.e., allowing for 1 hour or 8 hours of decay). The licensee’s estimated dose rates, at 1 hour and 8 hours following shutdown, for a completely uncovered core, are shown in Table 4-3.

Table 4-3 LOCA Results

	Dose Rates at Selected Locations		
Time	**Reactor Bridge (Occupational) Rem/hr**	**Biological Shield (Occupational) mrem/hr**	**Fence 6 m from Exterior Wall (Public) mrem/hr**
	MUTR-Provided Calculations		
1 hour	3,012	1,200	17.5
8 hours	2,005	31	0.5
	NRC Confirmatory Calculations		
Immediate	4,900	—	—
1 hour	2,580	—	—
8 hours	810	—	—

In order to show that the control room could be occupied for an extended period of time following the complete LOCA to allow for recovery efforts, the licensee also calculated the dose rate in the control room 8 hours following shutdown. The licensee estimated that this dose rate would be 4.8 mrem (0.048 mSv) per hour (/hr). Given the dose rates shown in Table 4-3, the reactor bridge above the core would be inaccessible for a period of time without refilling pool water. However, the control room would be accessible to allow necessary recovery operations to be performed.

The licensee's calculations in Table 4-3 assume that the core is completely uncovered. In an actual LOCA scenario, however, the delay time while the water is escaping from the reactor pool would allow the facility staff to move to areas of the facility that reduce their exposure significantly. Therefore the licensee also estimated the dose rate on the reactor bridge for a case in which the core is only partially uncovered (13 ft (4 m)) of water above the fuel elements), and determined that the dose rate would be 1.2 rem/hr (0.012 Sv/hr) or less, depending on how much time had passed since reactor shutdown. Procedures in the emergency plan (Ref. 49) state that in the event that radiation/radiological conditions become increasingly severe in the reactor building, which could happen during a LOCA in which the coolant level is gradually dropping, the building shall be evacuated. In response to RAI No. 4 (Ref. 58), the license stated that a five minute evacuation time is an overly conservative time for personnel to evacuate the reactor bay.

The NRC staff reviewed the licensee's LOCA analysis, as described above, and finds that the licensee's analysis is conservative because it is based on a TRIGA core with a higher power (and corresponding greater fission product inventory) than the MUTR core. The NRC staff notes that dose rates on the reactor bridge would be extremely high following a complete LOCA, and would also be high on the experimental floor outside the biological shield within 1 hour following reactor shutdown. However, given that a complete, instantaneous LOCA is not a credible accident (any potential LOCA would occur over a period of time), dose rates in the reactor building during the period before staff could evacuate would be significantly lower. Assuming that a reactor staff member is located on the reactor bridge for a 5-minute evacuation time, and exposed to a 1.2 rem/hr (0.012 Sv/hr) radiation field while the core is partially covered, the worker would receive a dose of approximately 100 mrem (1 mSv), which is well below the 5,000 mrem occupational dose limit in 10 CFR 20.1201. Doses in other areas of the reactor

building (the experimental floor outside the biological shield, or the control room) for a 5-minute evacuation time with the core partially covered would be significantly less than 100 mrem (1 mSv). However, the NRC staff also notes that even if the core did become completely uncovered, the dose rates on the experimental floor outside the biological shield and in the control room would be low enough that reactor staff could return to perform recovery operations.

The public dose rate at the site boundary fence, 6.1 m (20 ft) from the exterior wall and 8.28 m (27.2 ft) from the biological shield, could be above 0.5 mrem/hr (0.048 mSv/hr) for the first 8 hours following an instantaneous, complete LOCA. However, since an instantaneous, complete LOCA is not credible, and also because MUTR staff would be able to take actions to mitigate the LOCA, actual dose rates at this location at any point during a LOCA scenario would be much lower such that any public dose would remain below the 100 mrem (1 mSv) public dose limit in 10 CFR 20.1301. Although an instantaneous, complete LOCA is not considered to be a credible accident, the MUTR emergency plan (Ref. 49) states that if the fuel did become uncovered, in addition to the evacuation of the reactor building, radiological assessments would be performed at the reactor building boundary, as necessary. The NRC staff notes that publicly-accessible locations near the reactor building are areas on the University of Maryland campus, and are therefore under control of the licensee. The NRC staff expect that if such an accident were to occur (or if any LOCA occurred that could result in the core being completely uncovered for any extended period of time), the licensee would control access to areas near the building as needed, helping to ensure that public doses from any LOCA would remain below the 100 mrem public dose limit in 10 CFR 20.1301.

The NRC staff performed confirmatory calculations of the licensee-calculated dose rates on the reactor bridge 1 hour and 8 hours after shutdown, assuming a complete LOCA. The NRC staff also calculated the dose rate on the reactor bridge immediately after shutdown in order to show how the dose rate immediately after shutdown compare to dose rates following 1 or 8 hours of decay. The results of these calculations are shown in Table 4-3 alongside the licensee's calculations. For its calculations, the NRC staff used MicroShield 10.00. The NRC staff estimated the radionuclide inventory of the entire 250-kWt MUTR core by adjusting the inventories listed NUREG/CR-2387 (Ref. 33) to account for the power level and number of fuel elements in the MUTR core. For the 1-hour and 8-hour dose rates, the NRC - and licensee-calculated results show good agreement, demonstrating the validity of the licensee's estimates. The variation is due to differences in the methodologies and assumptions used. The NRC staff's calculated results are lower because they are based on a core that had operated at 250 kWt (the licensed power level of the MUTR) versus the 1 MWt that the licensee used, and because the NRC staff's calculation did not include the comparatively small contribution to the total dose rates from scattered radiation. The NRC staff calculations illustrate that dose rates from a LOCA decrease by a factor of approximately 2 during the first hour following shutdown.

The NRC staff reviewed the information above. The NRC staff finds that the licensee has adequate methods of determining that a loss of coolant has occurred, as well determining the extent of any loss of coolant, such that appropriate protective and/or mitigating actions can be taken. Additionally, the NRC staff finds that there is reasonable assurance that the facility design would contain any leaked coolant, and in the event of any overflow, the activities would be less than the regulatory limits on discharge to the sewer. The NRC staff finds that the licensee has demonstrated that for any LOCA, there would be no damage to the cladding or the fuel, and consequently no release of radioactive material to the reactor bay or the environment. The NRC staff reviewed the licensee's analyses of potential occupational and public external doses (from radiation shine due to the reduced shielding of the reactor fuel) that could result from a complete or partial LOCA, and also performed confirmatory calculations of portions of the

licensee's analysis. The NRC staff finds that the licensee's analyses used reasonable and conservative assumptions and methodologies. The NRC staff also finds, based on the results of the licensee's calculations and the NRC confirmatory calculations, that there is reasonable assurance that the occupational and public doses from any credible LOCA accident at the MUTR facility would be below the applicable 10 CFR Part 20 limits. Based on the information above, the NRC staff concludes that the results of the LOCA are acceptable.

4.1.4 Mishandling or Malfunction of Fuel

The licensee described the mishandling or malfunction of the fuel in Section 13.2.4 of the SAR, as supplemented by (Refs. 1 and 93), and responses to RAI Nos. 91, 41, 20, 9, and 4 (Refs. 12, 15, 21, 55, and 97 respectively). The licensee evaluated the effect of a fuel element cladding failure scenario with release of fission products in the reactor pool tank, caused by the mishandling or malfunction of a fuel bundle or corrosion damage. In response to RAI No. 9 (Ref. 55), the licensee stated that fuel damage could occur when conducting fuel inspections. Operation for an infinite time at 250 kWt for a centrally located fuel element that ruptured would release 41 millicuries of volatile fission product gases. Iodines would be retained by the pool water. A failure of fuel element cladding would release this activity into the pool water. The demineralizer could remove the nonsoluble particulates. The remaining hazards are associated with the soluble halogens as a contaminant or release of noble gases to the reactor bay. The licensee indicates that the consequences of mishandling or malfunction of fuel are bounded by the results of the MHA. (Section 4.1.1 of this SER provides further discussion of the MHA.) In response to RAI No. 91 (Ref. 12), the licensee stated that confinement is required to be established before any fuel manipulations take place. In response to RAI No. 41 (Ref. 15), the licensee stated that the MUTR had no procedures for fuel movements. The licensee clarified in response to RAI No. 20 (Ref. 21) that the MUTR does have procedures for fuel movement to storage racks, and that procedures for in-reactor fuel manipulations or fuel inspections can be developed and approved as needed. In response to RAI Nos. 4 and 5 (Ref. 97), the licensee stated that in preparation for receiving additional fuel procedures will be developed to help ensure the radiation exposures from fuel receipt and storage will be within the limits of 10 CFR Part 20 and that there will not be any new accidents involving fuel receipt and storage that have not been previously evaluated.

The NRC staff has reviewed SAR Section 13.2.4 (Ref. 1), as supplemented by responses to RAI Nos. 91, 41, 20, and 9 (Refs. 12, 15, 21, and 55, respectively). The NRC staff finds that TS 3.1 Specification 4, prohibits operation of the reactor with damaged fuel except to locate such fuel, and that the licensee has discussed initiating events that could damage fuel or accidentally release fission products from irradiated fuel in the core, in storage, or in between the core and the storage area. The event that would cause the worst radiological consequences has been analyzed and bounded by the licensee's MHA. Based on the information provided above, the NRC staff finds the results of the licensee's analysis of the mishandling or malfunction of the fuel accident acceptable.

4.1.5 Loss of Coolant Flow

The licensee described the loss of coolant flow in Sections 5, 13.1.4, and 13.2.3 of the SAR (Ref. 1), as supplemented (Ref. 8). The reactor core of the MUTR is located in a tank, surrounded by 6,000 gallons (20,000 liters) of water and is cooled by natural convection flow. The pool may lose heat to the reactor bay area. The pool water may also be cooled by removing heat to the secondary cooling system through a heat exchanger. In response to RAI No. 70 (Ref. 8), the licensee stated that an eroded impeller on the primary coolant pump

had caused a reduction in primary coolant flow rate through the primary coolant cleanup system and did not cause fuel cladding failures or adversely affect any core components. The licensee provide in response to RAI No. 1d (Ref. 56) that potential consequences of nucleate boiling are not safety significant, and air-cooling would even be sufficient to remove decay heat in the event of a total loss of coolant described in SAR Section 13.2.3.

The NRC staff has reviewed SAR Sections 5 and 13.1.4, as supplemented by response to RAI Nos. 70 and 1d (Ref. 8 and 56), and finds that the MUTR facility does not need an engineered cooling system, a secondary coolant system, or the primary coolant pump for safe operation of the reactor. Without operation of the cooling system, the reactor would need to be shut down before reaching the primary coolant temperature limit as specified in TS 3.2, Specification 3.

The driving force provided by natural circulation is limited and would minimize the potential for any foreign object to be transported to the grid plate and block cooling flow. If a foreign object lodged in the grid plate were to create a possible blockage of a coolant channel, the additional cooling paths in the open lattice design of the core and reactor flow components would allow continued cooling of the fuel elements. (Section 2.3 of this SER provides further discussion of the reactor pool.) The NRC staff also finds that there is reasonable assurance that postulated initiating events for a total loss of flow as a result of pump, electrical power failure, or blockage of fuel channel(s) by a foreign object would not result in any fuel cladding failure or radiological consequences, because when protective functions initiate at the LSSS of 175 °C (347 °F) the maximum fuel temperature in the core would be 308 °C (586 °F), well below the fuel temperature SL of 1,000 °C (1,832 °F). Based on its review of the information above, the NRC staff finds that the results of the licensee's analysis of a loss of coolant flow is acceptable.

4.1.6 Experiment Malfunction

The licensee described a postulated experiment malfunction in Section 13.1.6 of the SAR (Ref. 1), as supplemented by responses to RAIs (Refs. 11, 15, 43, and 58). The licensee stated that experiment malfunction could result in the release of radioactive material either into the reactor pool tank or into the reactor bay. This type of accident would potentially result from an experiment where irradiation conditions exceed the design specifications of the experiment. In that case, the sample might become overheated or develop pressures that could cause a failure of the experiment container.

TS 3.6.1 and 3.6.2 limits the reactivity worth of any single experiment to $1.00 and to $3.00 for the total absolute reactivity worth of experiments. The analysis supplied in SAR Section 13.2.2, and evaluated in SER Section 4.1.2, demonstrates the acceptability of the limitation. The NRC staff concludes that experiment malfunction related to unexpected reactivity will not result in unacceptable consequences.

TS 3.6.3 limits the introduction of corrosive materials into the reactor pool by requiring double encapsulation. The TS is consistent with the guidance in NUREG-1537 and helps ensure that a highly unlikely double encapsulation failure would have to occur to cause a release of such material into the coolant system. The NRC staff concludes that this TS helps ensure that the possibility a failure of an experiment with corrosive material is acceptably limited.

TS 3.6.4 establishes the requirement to limit the use of explosive material in the MUTR to 25 milligrams (mg) trinitrotoluene equivalent and states that quantities less than 25 mg may be irradiated, provided that the pressure produced in the experiment container is demonstrated to

be less than the design pressure of the container. In response to RAI No. 18 (Ref. 15), the licensee provided an example calculation for different types of encapsulation materials. The NRC staff finds that this is consistent with the guidance in Regulatory Guide 2.2, "Development of Technical Specifications for Experiments in Research Reactors," issued November 1973 (Ref. 38), and NUREG-1537.

The licensee stated that, with regard to an experiment malfunction leading to a radiological release, TS 3.6.5 and TS 3.6.6 limits the quantity and type of material in the experiment so that, if the experiment fails, the airborne radioactivity in the reactor bay or the unrestricted area will not result in exceeding the applicable dose limits in 10 CFR Part 20. In its evaluation of the MHA, the licensee demonstrated the ability to perform calculations of dose to the reactor staff and members of the public from the release of airborne radioactive materials in the reactor bay.

In response to RAI No. 37 (Ref. 95), the licensee updated TS 6.5, which requires the Reactor Safety Committee to review and approve all new experiments, and Level 3 personnel to review and approve any minor changes that do not significantly alter the experiment. Any changes to experiments (which are considered new experiments) shall meet the requirements of 10 CFR 50.59, "Changes, tests and experiments."

The NRC staff has reviewed SAR Section 13.1.6 and finds that the TSs limit the quantity and type of materials and the reactivity of experiments. There is reasonable assurance that the potential consequences of these initiating events would be within the dose limits of 10 CFR Part 20. Based on its review of the information above, the NRC staff finds that the MUTR staff evaluation of postulated experiment malfunctions is acceptable.

4.1.7 Loss of Normal Electrical Power

The licensee described the loss of normal electrical power in Sections 8.2 and 13.1.7 of the SAR (Ref. 1). The licensee evaluated the scenario for a postulated MUTR accident involving the loss of normal electrical power and found that it will not result in any scenario that could cause the release of radioactive material. In the event of a loss of electrical power, all control rods insert into the core automatically by gravity, caused by the loss of power to the electromagnets that couple the control rod to the drive mechanism. Reactor operators could confirm that the rods were fully inserted by visual observation. If the reactor ventilation system were running (its normal condition is off) at the time of power loss, the louvers would automatically close. If the primary cooling system was operating, it would shut down upon loss of power to the primary pump. Reactor decay heat would dissipate through natural circulation in the primary coolant, which is no different from normal operation. (Loss of coolant flow is discussed in Section 4.1.5 above.) Radiation levels can be measured by battery power instrumentation.

The NRC staff reviewed SAR Sections 8.2 and 13.1.7 and finds that the MUTR does not require normal electrical power, or emergency backup electrical power to safely shut down the reactor, to maintain the reactor in a shutdown condition indefinitely, or to maintain long-term core cooling because air cooling is sufficient to remove the decay heat before exceeding a SL. There is sufficient coolant in the reactor pool to absorb the decay heat from the reactor without the need for the primary or secondary cooling system. On this basis, the NRC staff finds the results of the licensee's analysis of events resulting in the loss of normal electrical power are acceptable.

4.1.8 External Events

The licensee described accidents from external events in Sections 2.2.2, 2.5 and 13.1.8 of the SAR (Ref. 1), as supplemented by the response to RAI No. 2 (Ref. 7), and their potential impact to the MUTR. The likelihood of external events such as earthquakes, hurricanes, floods, and tornadoes and consequences of small plane strikes are considered insignificant. The reactor building is a cinderblock structure with steel frames. The robust construction of the pool tank and biological shield provides further protection against the potential consequences of external events. An accident caused by severe weather or earthquake may result in a loss of electric power, which in turn results in a reactor trip.

In response to RAI No. 2 (Ref. 7), the licensee provided the potential impact of an aircraft hitting the reactor building given the proximity of the College Park Airport. The analysis indicated that in 1992 a small single-engine plane crashed into the Maryland Fire and Rescue Research Institute building's roof after takeoff. The building, which is of similar construction to the Chemical and Nuclear Engineering Building, suffered relatively minor structural damage. Planes using the College Park Airport are almost exclusively single or twin engine, privately owned, and limited to a maximum gross weight of 8,500 pounds. No transient aircraft are permitted to use the airstrip.

The NRC staff reviewed SAR Sections 2.2.2, 2.5, and 13.1.8, as supplemented by the response to RAI No. 2 (Ref. 7), and finds that severe storms, floods, earthquakes, and tornadoes are unlikely for the area around the MUTR site. The NRC staff finds that there is reasonable assurance that the potential crash of a small aircraft would not have radiological consequences based on a previous aircraft crash involving a campus building with a construction similar to the Chemical and Nuclear Engineering Building. The NRC staff finds that given the construction of the confinement building, the location of the reactor in the biological shield, and the ability to shut down and secure the reactor in the event of external events, external events would not pose undue risk to public health and safety. On this basis, the NRC staff finds that the radiological consequences of fission product releases from external events are bounded by the MHA analysis and are acceptable.

4.1.9 Mishandling or Malfunction of Equipment

The licensee described mishandling or malfunction of equipment in Figure 3.2 and Section 13.1.9 of the SAR (Ref. 1), as supplemented by the response to RAI No. 32 (Ref. 2). The licensee stated that the MUTR has no credible accidents other than the misuse or malfunction of fuel-handling equipment already evaluated.

The NRC staff reviewed SAR Figure 3.2 and Section 13.1.9 (Ref. 1), as supplemented by the response to RAI No. 32 (Ref. 2), for initiating events requiring a case-by-case reactor-specific discussion. The NRC staff finds no additional events that would fall outside the categories provided in NUREG-1537. The NRC staff finds that the physical limitations of the MUTR design provide reasonable assurance that the mishandling or malfunction of equipment would not lead to fission-product release radiological consequences greater than those bounded by the MHA. Based on its review, the NRC staff concludes that the results of the licensee’s analysis of the mishandling or malfunction of equipment are acceptable.

4.2 Conclusions

The NRC staff reviewed the licensee's analyses of potential accidents at the reactor facility and concludes that the licensee has postulated and analyzed sufficient accident-initiating events and scenarios. On the basis of its review of the information provided in the licensee's SAR, as supplemented, the NRC staff concludes the following:

- The licensee has considered the expected consequences of a sufficiently broad spectrum of postulated credible accidents and an MHA, emphasizing those that could lead to a loss of integrity of fuel element cladding and a release of fission products.

- The licensee analyzed the most significant credible accidents and the MHA and determined that, under conservative assumptions, the most significant credible accidents and the MHA will not result in occupational radiation exposure of the MUTR staff or radiation exposure to a member of the public in excess of the applicable 10 CFR Part 20 limits.

- The licensee has employed appropriate methods in performing the accident and consequence analyses.

- For accidents involving insertions of excess reactivity, the licensee has demonstrated that a reactivity insertion of $3.70 will not result in a peak fuel temperature above the SL of 1,000 °C (1,832 °F). An insertion of excess reactivity resulting from an experiment malfunction is limited to $1.00 by TS 3.6.1, and ramp additions are limited by TS 3.2 Specification 2, and these additions do not pose a threat to fuel integrity. The licensee did not identify any other accidents involving a reactivity addition that are not bounded by this analysis.

- The review of the calculations, including assumptions, demonstrated that a LOCA would not result in unacceptable fuel element temperatures. The reactor can be safely cooled with all fuel elements in an air environment. Doses to individuals evacuating the reactor bay and at the site boundary are calculated to be below the 10 CFR Part 20 limits.

- External events that would lead to fuel disruption are unlikely.

- The accident analysis for the MUTR establishes the acceptability of the core configuration defined and analyzed in the SAR.

- The accident analysis confirms the acceptability of the licensed power of 250 kWt, including the response to anticipated transients and accidents.

- The accident analysis confirms the acceptability of the assumptions stated in the individual analyses provided in the SAR, as supplemented.

The NRC staff reviewed the radiation source term and MHA calculation for the MUTR. The NRC staff finds that the calculations, including the assumptions, demonstrate that the source term assumed and other boundary conditions used in the analysis are acceptable. The radiological consequences to the public and occupational workers at the MUTR are in conformance with the requirements in 10 CFR Part 20. The licensee reviewed the postulated accident scenarios provided in NUREG-1537 and did not identify any other accidents having fission product release consequences not bounded by the MHA. The MUTR design features and administrative restrictions found in the TSs prevent the initiation of accidents and mitigate

any consequences. Therefore, on the basis of this review, the NRC staff concludes that there is reasonable assurance that no credible accident would cause a significant radiological risk and that the continued operation of the MUTR poses no undue risk to the facility staff, the environment, or the public.

5 TECHNICAL SPECIFICATIONS

In this section of the safety evaluation report (SER), the U.S. Nuclear Regulatory Commission (NRC) staff evaluates the licensee's proposed technical specifications (TSs) dated December 2, 2016 (Ref. 101). The TSs define specific features, characteristics, and conditions required for the safe operation of the Maryland University Training Reactor (MUTR) facility. The renewal license explicitly includes the TSs as Appendix A. The NRC staff reviewed the format and content of the TSs for consistency with the guidance in Chapter 14, and Appendix 14.1 to NUREG-1537, "Guidelines for Preparing and Reviewing Applications for the Licensing of Non-Power Reactors," Part 1, "Format and Content," issued February 1996 (Ref. 23), and American National Standards Institute/American Nuclear Society (ANSI/ANS)-15.1-2007, "The Development of Technical Specifications for Research Reactors" (Ref. 30). The NRC staff specifically evaluated the content of the proposed TSs to determine if they meet the requirements in Title 10 of the *Code of Federal Regulations* (10 CFR) 50.36, "Technical specifications" (Ref. 22). The NRC staff also relied on the "Interim Staff Guidance on the Streamlined Review Process for License Renewal for Research Reactors," dated October 15, 2009 (Ref. 26), to perform its review.

5.1 Introduction

The introduction section of the TSs contain statements on the scope and format of the TSs and definitions that clarify the TSs.

5.1.1 TS 1.1 Scope

TS 1.1 states the following:

> Included in this document are the Technical Specifications and the "Bases" for the Technical Specifications. These bases, which provide the technical support for the individual technical specifications, are included for information purposes only. They are not part of the Technical Specifications, and they do not constitute limitations or requirements to which the licensee must adhere.

The NRC staff reviewed TS 1.1 and finds, the licensee included proposed TSs in the application (as supplemented) in accordance with the requirements of 10 CFR 50.36. The NRC staff also finds that a summary statement of the bases or reasons for such specifications, other than those covering administrative controls, was included in the application. On the basis of this review, the NRC staff concludes that TS 1.1 accurately describes the scope of the TSs.

5.1.2 TS 1.2 Format

TS 1.2 states the following:

> These specifications are formatted to NUREG-1537 and ANSI/ANS 15.1-2007

TS 1.2 states that the TS following the format suggested in NUREG-1537 and ANSI/ANS 15.1-2007. The NRC staff reviewed TS 1.2 and finds that it explains the formatting used in the TSs to the reader and is therefore, acceptable.

5.1.3 TS 1.3 Definitions

The NRC staff reviewed TS 1.2 and finds, the licensee proposed the following definitions to be consistent with the guidance in NUREG-1537 and ANSI/ANS-15.1-2007. The licensee's proposed TSs include minor modifications to, and some additional facility specific, definitions, as reproduced below.

> ALARA – An acronym for "as low as reasonably achievable", ALARA means making every reasonable effort to maintain exposures to radiation as far below the dose limits in 10 CFR Part 20 as is practical, consistent with the purpose for which the licensed activity is undertaken, taking into account the state of technology, the economics of improvements in relation to state of technology, the economics of improvements in relation to benefits to the public health and safety, and other societal and socioeconomic considerations, and in relation to utilization of nuclear energy and licensed materials in the public interest.
>
> AUTOMATIC MODE – Automatic mode operation shall mean operation of the reactor with the mode selector switch in the automatic position.
>
> CHANNEL – A channel is the combination of sensors, lines, amplifiers, and output devices which are connected for the purpose of measuring the value of a parameter.
>
> CHANNEL CALIBRATION – A channel calibration is an adjustment of the CHANNEL such that its output corresponds with acceptable accuracy to known values of the parameter which the CHANNEL measures. Calibration shall encompass the entire CHANNEL, including equipment actuation, alarm, or trip and shall be deemed to include a channel test.
>
> CHANNEL CHECK – A channel check is a qualitative verification of acceptable performance by observation of CHANNEL behavior, or by comparison of the CHANNEL with other independent CHANNELS or systems measuring the same variable.
>
> CHANNEL TEST – A channel test is the introduction of a signal into the CHANNEL to verify that it is operable.
>
> CONFINEMENT – Confinement means a closure of the overall facility that controls the movement of air into it and out, thereby limiting release of effluents, through a controlled path.
>
> CONTROL ROD – A control rod is a device fabricated from neutron-absorbing material which is used to establish neutron flux changes and to compensate for routine reactivity losses. A control rod can be coupled to its drive unit allowing it to perform a safety function when the coupling is disengaged.
>
> CONTROL ROD GUIDE TUBE – Hollow tube in which a CONTROL ROD moves.

CORE CONFIGURATION – The core consists of 24 fuel bundles, with a total of 93 fuel elements, arranged in a rectangular array with one bundle displaced for the pneumatic experimental system; three CONTROL RODS; and two graphite reflectors.

DROP TIME – DROP TIME is the elapsed time between the initiation of a scram signal by either automated or operator action and the instant the slowest scrammable CONTROL ROD reaches its fully inserted position.

EXCESS REACTIVITY – Excess Reactivity is that amount of reactivity that would exist if all CONTROL RODS were moved to the maximum reactive condition from the point where the reactor is exactly critical (k_{eff} = 1).

EXPERIMENT – Any operation, hardware, or target (excluding devices such as detectors, foils, etc.), that is designed to investigate non-routine reactor characteristics or that is intended for irradiation within the EXPERIMENTAL FACILITIES, and that is not rigidly secured to a core or shield structure so as to be part of their design.

EXPERIMENTAL FACILITIES – Experimental facilities shall include the beam ports, pneumatic transfer systems and any in-core facilities.

EXPERIMENT SAFETY SYSTEMS – Experiment safety systems are those systems, including their associated input circuits, which are designed to initiate a scram for the primary purpose of protecting an EXPERIMENT or to provide information which requires manual protective action to be initiated.

FOUR ELEMENT FUEL BUNDLE – The four element fuel bundle consists of an aluminum bottom, 4 stainless steel clad FUEL ELEMENTS and aluminum top handle.

FUEL ELEMENT – A fuel element is a single TRIGA fuel rod.

FUELED DEVICE – An experimental device that contains fissionable material.

FULL POWER – Full licensed power is defined as 250 kW.

INSTRUMENTED FUEL ELEMENT (IFE) – An instrumented element is a special FUEL ELEMENT in which one or more thermocouples are embedded in the fuel.

ISOLATION – Isolation is the establishment of CONFINEMENT by closing of doors leading from the reactor bay area into the balcony area on the top floor, the door to the reception area on the ground floor, and the building exterior doors.

LIMITING CONDITIONS FOR OPERATION (LCO) – Limiting conditions for operation are the lowest functional capability or performance levels of equipment required for safe operation of the facility.

LIMITING SAFETY SYSTEM SETTING (LSSS) – The limiting safety system setting is the FUEL ELEMENT temperature, which if exceeded, shall cause a reactor scram to be initiated, preventing the SAFETY LIMIT from being exceeded.

MEASURED VALUE – The measured value is the value of a parameter as it appears on the output of a CHANNEL.

ON CALL – A senior operator is “on call” if they are on the College Park campus or within 10 miles and can reach the facility within one half hour following a request.

OPERABLE – Operable means a component or system is capable of performing its intended function.

OPERATING – Operating means a component or system is performing its intended function.

REACTIVITY WORTH OF EXPERIMENT – The reactivity worth of an experiment is the value of the reactivity change that results from the EXPERIMENT, being inserted into or removed from its intended position.

REACTOR OPERATING – The reactor is operating whenever it is not secured or shutdown.

REACTOR OPERATOR (RO) – A reactor operator is an individual who is licensed by the U.S. Nuclear Regulatory Commission (NRC) to manipulate the controls of the reactor.

REACTOR SAFETY SYSTEM – Reactor safety systems are those systems, including their associated input CHANNELS, which are designed to initiate automatic reactor protection or to provide information for initiation of manual protective action.

REACTOR SECURED – The reactor is secured when:

1. *Either* there is insufficient moderator available in the reactor to attain criticality or there is insufficient fissile material present in the reactor to attain criticality under optimum available conditions of moderator and reflection;

2. *Or* the following conditions exist:

   (a) All control devices (3 CONTROL RODS) are fully inserted;
   (b) The console key switch is in the off position and the key is removed from the lock;
   (c) No work is in progress involving core fuel, core structure, installed CONTROL RODS, or control rod drives unless they are physically decoupled from the CONTROL RODS;
   (d) No EXPERIMENTS in or near the reactor are being moved or serviced that have, on movement, a reactivity worth exceeding $1.00.

REACTOR SHUTDOWN – The reactor is shut down if it is subcritical by at least one dollar in the REFERENCE CORE CONDITION with the reactivity worth of all installed EXPERIMENTS included.

REFERENCE CORE CONDITION – The reference core condition is the reactivity condition of the core when it is at 20ºC and the reactivity worth of xenon is negligible, $0.01 or less.

REPORTABLE OCCURRENCE – A REPORTABLE OCCURRENCE is any of the following:

1. Operation with actual safety system settings for required systems less conservative than the LIMITING SAFETY SYSTEM SETTINGS specified in Technical Specification 2.2;

2. Operation in violation of the LIMITING CONDITIONS FOR OPERATION established in the Technical Specifications;

3. Operation with a required REACTOR SAFETY SYSTEM component in an inoperative or failed condition which renders or could render the system incapable of performing its intended safety function. If the malfunction or condition is caused during maintenance, then no report is required;

4. An unanticipated or uncontrolled change in reactivity greater than one dollar. Reactor trips resulting from a known cause are excluded;

5. Abnormal and significant degradation in reactor fuel, or cladding, or both, coolant boundary, or CONFINEMENT boundary (excluding minor leaks);

6. An observed inadequacy in the implementation of either administrative or procedural controls, such that the inadequacy causes or could have caused the existence or development of an unsafe condition with regard to reactor operations.

SAFETY CHANNEL – A safety channel is a CHANNEL in the REACTOR SAFETY SYSTEM.

SAFETY LIMIT – Safety limits are limits upon important process variables that are found to be necessary to reasonably protect the integrity of certain physical barriers that guard against the uncontrolled release of radioactivity.

SECURED SHUTDOWN – Secured shutdown is achieved when the reactor meets the requirements of the definition of “REACTOR SECURED” and the facility administrative requirements for leaving the facility with no licensed reactor operators present.

SENIOR REACTOR OPERATOR (SRO) – A senior reactor operator is an individual who is licensed by the NRC to direct the activities of reactor operators. Such an individual is also a reactor operator.

SHALL, SHOULD, MAY – The word “shall” is used to denote a requirement; the word “should” is used to denote a recommendation; and the word “may” is used to denote permission, neither a requirement nor a recommendation.

SHUTDOWN MARGIN – Shutdown margin is the minimum reactivity necessary to provide confidence that the reactor can be made subcritical by means of the control and safety systems starting from any permissible OPERATING condition and with the most reactive rod in its most reactive position, and that the reactor will remain subcritical without further operator action.

SHUTDOWN REACTIVITY – Shutdown reactivity is the value of the reactivity of the reactor with all CONTROL RODS in their least reactive position (*e.g.*, inserted). The

shutdown reactivity includes the reactivity value of all installed EXPERIMENTS plus the reactivity of the REFERENCE CORE CONDITION.

STANDARD CORE – A standard core is an arrangement of standard TRIGA fuel in the reactor grid plate and the IFE in grid position D8.

STEADY STATE MODE – Steady state mode operation shall mean operation of the reactor with the mode selector switch in the steady state position.

THREE ELEMENT FUEL BUNDLE – The three element fuel bundle consists of an aluminum bottom, 3 stainless steel clad FUEL ELEMENTS, 1 CONTROL ROD GUIDE TUBE, and aluminum top handle.

TRUE VALUE – The true value is the actual value of a parameter.

UNSCHEDULED SHUTDOWN – An unscheduled shutdown is defined as any unplanned shutdown of the reactor caused by actuation of the REACTOR SAFETY SYSTEM, operator error, equipment malfunction, or a manual shutdown in response to conditions that could adversely affect safe operation, not to include shutdowns that occur during testing or checkout operations.

These definitions used in MUTR TSs, are either facility specific or are standard definitions consistent with NUREG-1537 and ANSI/ANS-15.1-2007. Based on the review of the information provided above, the NRC staff concludes that the licensee's TSs definitions are acceptable.

5.2 Safety Limits and Limiting Safety System Settings

5.2.1 TS 2.1 Safety Limit

TS 2.1 is evaluated in Section 2.5.3 of this SER and found acceptable.

5.2.2 TS 2.2 Limiting Safety System Settings

TS 2.2 is evaluated in Section 2.5.3 of this SER and found acceptable.

5.3 Limiting Conditions for Operation

5.3.1 TS 3.1 Reactor Core Parameters

TS 3.1 is evaluated in Sections 2.2.1, 2.2.2, and 2.5.1 of this SER and found acceptable.

5.3.2 TS 3.2 Reactor Control and Safety Systems

TS 3.2 is evaluated in Sections 2.2.2 and 2.5.3 of this SER and found acceptable.

5.3.3 TS 3.3 Coolant Systems

TS 3.3 is evaluated in Section 2.3 of this SER and is acceptable.

5.3.4 TS 3.4 Confinement

TS 3.4 states the following:

Specifications

1. CONFINEMENT shall be considered established when the doors leading from the reactor bay area into the balcony area on the top floor, and the reception area as well as the building exterior are secured and ventilation system is off with louvers closed.

2. CONFINEMENT shall be established whenever the reactor is not secured or radioactive material with significant potential for airborne release is being handled, with the exception of the time that persons are physically entering or leaving the CONFINEMENT area.

3. Forced air ventilation to the outside shall automatically secure without operator intervention in such case that the radiation levels exceed a preset level as defined in Table 3.1.

TS 3.4, Specification 1, specifies the equipment required to achieve containment. The NRC staff reviewed TS 3.4, Specification 3, and finds that it ensure that confinement will be established as described in the safety analysis report (SAR) as supplemented by RAI No. 1a (Ref. 43).

TS 3.4, Specification 2, defines when confinement is to be established. The NRC staff reviewed TS 3.4, Specification 3, and finds that it helps limit the release of effluents between the reactor bay and the environment through controlled or defined pathways, and to provide operational flexibility for personnel.

TS 3.4, Specification 3, is to establish confinement and restrict leakage. The NRC staff reviewed TS 3.4, Specification 3 and finds that it helps ensure that the radioactive releases will be minimized by securing the fans (if in use) when the specific radiological setpoints are exceeded. As stated by the licensee in supplements to the SAR (Ref. 41, 42, and 61), the licensee dose not normally operate the ventilation system during reactor operation because of the detrimental effects to the reactor console and associated control components from condensation. The NRC staff reviewed the above SAR supplements and finds that during there is no forced air ventilation during normal operating, and if the ventilation were in operating the louvers would close when the fans secured to establish confinement.

The NRC staff reviewed TS 3.4, Specifications 1 through 3, and finds that TS 3.4 helps achieve the controlled release of effluents, as analyzed in the SAR. Occupational and public doses from routine operations and accident conditions are based on the identified leakage paths provided by the license in response to RAI No. 1b (Ref. 43), when the ventilation fans are off and the louvers are closed. These specifications support the SAR accident analysis and are fundamental to keep occupational and public doses below the limits in Appendix B, “Annual Limits on Intake (ALIs) and Derived Air Concentrations (DACs) of Radionuclides for Occupational Exposure Effluent Concentrations; Concentrations for Release to Sewerage,” to 10 CFR Part 20, “Standards for Protection against Radiation.” The NRC staff finds that TS 3.4, Specifications 1 through 3, are consistent with the guidance in NUREG-1537 and ANSI/ANS-15.1-2007. On this basis, the NRC staff concludes that TS 3.5, Specifications 1 through 3, are acceptable.

5.3.5 TS 3.5 Radiation Monitoring System and Effluents

TS 3.5.1, Radiation Monitoring System, is evaluated in Sections 3.1.3 and 3.1.7 of this SER and found acceptable.

TS 3.5.2, Effluents, is evaluated in Section 3.1.1 of this SER and found acceptable.

5.3.6 TS 3.6, Limitations on Experiments

TS 3.6 states the following:

Specifications

The reactor shall not be operated unless the following conditions governing experiments exist.

(...)

3. Experiments containing materials corrosive to reactor components, compounds highly reactive with water, and liquid fissionable materials shall be doubly encapsulated. In the event of a failure, the potentially impacted reactor components shall be inspected for damage. The results of the inspection and any corrective action taken shall be reviewed by the Director or designated alternate and determined to be satisfactory before operation of the reactor is resumed.

4. Explosive materials or potential explosive materials in quantities greater than 25 mg TNT or its equivalent shall not be irradiated in the reactor or EXPERIMENTAL FACILITIES. Explosive materials in quantities equal to or less than 25 mg TNT or its equivalent may be irradiated provided the pressure produced upon detonation of the explosive has been calculated and/or experimentally demonstrated to be less than the failure pressure of the container. The failure pressure of the container is one half of the design pressure. Total explosive material inventory in the reactor facility may not exceed 100 mg TNT or its equivalent. In the event of a failure, the potentially impacted reactor components shall be inspected for damage. The results of the inspection and any corrective action taken shall be reviewed by the Director or designated alternate and determined to be satisfactory before operation of the reactor is resumed.

5. EXPERIMENT materials, except fuel materials, which could off-gas, sublime, volatilize, or produce aerosols under (1) normal OPERATING conditions of the EXPERIMENT or reactor, (2) credible accident conditions in the reactor, or (3) possible accident conditions in the EXPERIMENT shall be limited in type and quantity such that if 100% of the gaseous activity or radioactive aerosols produced escaped to the reactor room or the atmosphere, the airborne radioactivity in the reactor room or outside environment will not result in exceeding the applicable dose limits set forth in 10 CFR Part 20.

   In calculations pursuant to TS 3.6.5 above, the following assumptions shall be used:

(a) If the effluent from an experimental facility exhausts through a holdup tank, which closes automatically on high radiation level, at least 10% of the gaseous activity or aerosols produced shall escape.

(b) If the effluent from an experimental facility exhausts through a filter installation designed for greater than 99% efficiency for 0.3μm particles, at least 10% of these particles shall escape.

(c) If an EXPERIMENT fails and releases radioactive gases or aerosols to the reactor bay or atmosphere, 100% of the radioactive gases or aerosols shall escape.

(d) If an EXPERIMENT fails that contains materials with a boiling point above 54ºC, the vapors of at least 10% of the materials shall escape through an undisturbed column of water above the core.

6. Each fueled EXPERIMENT shall be controlled such that the total inventory of iodine isotopes 131 through 135 in the EXPERIMENT is no greater than 5 mCi.

TS 3.6, Specifications 1 and 2, are evaluated in Section 2.5.1 of this SER and found acceptable.

TS 3.6, Specification 3, places administrative material limitations on experiments. Specifically, it requires that experiments containing materials corrosive to reactor components, compounds highly reactive with water, potentially explosive materials, and liquid fissionable materials are double-encapsulated. The NRC staff reviewed TS 3.6, Specification 3, and finds that it will reduce the likelihood that encapsulation failure could occur and cause damage to the fuel element cladding or other reactor components, create a radiological hazard to staff, and create the potential for an industrial hazard (from the non-nuclear aspects of the material) that could affect safe reactor operation. The NRC staff finds TS 3.6, Specification 3 consistent with the guidance in NUREG 1537, Appendix 14.1, Section 3.8.2, and is acceptable.

TS 3.6, Specification 4, establishes the requirement to limit the irradiation of explosive material up to 25 milligrams (mg) energy release trinitrotoluene or equivalent. This specification helps ensure that no damage to the fuel cladding will result from a potential failure of an experiment containing explosive material. In response to RAI No. 18 (Ref. 15), the licensee provided an example calculation comparing the detonation pressure to the failure pressure of stainless steel, aluminum, and polyethylene containers. TS 3.6, Specification 4 also limits the quantity of explosive material in the reactor facility to 100 mg or less. The NRC staff reviewed TS 3.6, Specification 4, and finds it consistent with the guidance in NUREG-1537, Appendix 14.1, Section 3.8.2, on experiments. On the basis of the information provided above, the NRC staff finds TS 3.6, Specification 4, acceptable.

TS 3.6, Specification 5, Items a through d, address the potential for experiment failures and malfunctions by requiring assumptions for experiments that will help ensure that the source term calculations are conservative, such that if an experiment failure or malfunction should occur, the gases or aerosols released will not result in exceeding the dose limits of 10 CFR Part 20. The NRC staff reviewed the specific assumptions cited in TS 3.6, Specification 5, Items a through d, and finds them to be consistent with the guidance in NUREG-1537, Appendix 14.1, Section 3.8.3. On the basis of the information provided above, the NRC staff finds TS 3.6, Specification 5, Items a through d, acceptable.

TS 3.6, Specification 6, establishes the requirement to limit iodine-131 through iodine-135 isotopes in fueled experiments to 5 millicuries (mCi). The NRC staff reviewed the response to RAI No. 4 (Ref. 58) and finds the approximate iodine activity is 19 mCi. The NRC staff reviewed TS 3.6, Specification 6 and finds that 5 mCi activity is less than the quantity iodine released in the maximum hypothetical accident. This helps ensure that for any failure of a fueled experiment releasing 5 mCi of iodine, the resulting doses are less than the maximum hypothetical accident and limits of 10 CFR Part 20. The NRC staff reviewed TS 3.6, Specification 6, and finds that it is consistent with the guidance in NUREG-1537 Section 3.8.2 and ANSI/ANS-15.1-2007. On the basis of the information provided above, the NRC staff finds TS 3.6, Specification 6, acceptable.

The NRC staff reviewed the licensee's annual operating reports (Refs. 50 through 54) and finds that the licensee has been reporting special experiments and providing evaluation of any new special experiments in accordance with 10 CFR 50.59, "Changes, tests and experiments.". The NRC staff also reviewed experiments in NRC Inspection Reports (Refs. 44, 45, 47) and finds that experiments are being conducted and controlled in accordance with the requirements of regulations and the licensee's TSs.

The NRC staff finds that the MUTR limitations on experiments are typical of TRIGA reactors, and the licensee's use of experiments is properly controlled by TS 3.6, Specifications 1 through 6. The NRC staff finds that these TSs are consistent with the guidance in NUREG-1537 and ANSI/ANS-15.1-2007 for the reasons described above and are acceptable.

5.4 TS 4, "Surveillance Requirements"

TS 4 states the following:

Specification

> Surveillances shall be performed on a timely basis. In the event that the reactor is not in an OPERABLE condition, such as during periods of refueling, or replacement or repair of safety equipment, surveillances may be postponed, see Table 4.1, until such time that the reactor is OPERABLE. In such case that any surveillance must be postponed, a written directive signed by the Director, shall be placed in the records indicating the reason why and the expected completion date of the required surveillance. This directive shall be written before the date that the surveillance is due. Under no circumstance shall the reactor perform routine operations until such time that all surveillances are current and up to date. Any system or component that is modified, replaced, or had maintenance performed will undergo testing to ensure that the system/component continues to meet performance requirements.

Technical Specification	Defer during shutdown?	Required prior to operations?
4.1 Reactor Core Parameters	Yes	Yes
4.2 Reactor Control and Safety Systems	Yes	Yes
4.3 Primary Coolant System	No	N/A
4.4 Confinement and Ventilation	Yes	Yes
4.5 Radiation Monitoring and Effluents	No	N/A
4.6 Experiments	Yes	Yes

Table 4.1: Surveillance Requirements

TS 4 helps ensure that deferred surveillances are accomplished in a planned and organized manner. The NRC staff reviewed TS 4 and finds that it provides appropriate MUTR surveillance practices and is consistent with the guidance in NUREG-1537 and ANSI/ANS-15.1-2007. Furthermore, TS 4 helps ensure that the quality of systems and components is maintained during an extended shutdown, the MUTR facility operation will be conducted within the safety limit (SL), and the limiting conditions for operation will be satisfied. Based on the information provided above, the NRC staff concludes that TS 4 is acceptable.

5.4.1 TS 4.1, "Reactor Core Parameters"

TS 4.1, Specification 3, states the following:

> Specifications
>
> (…)
>
> 3. CORE CONFIGURATION shall be verified prior to the first startup of the day.
>
> (…)

TS 4.1, Specifications 1 and 2, are evaluated in Section 2.5.1 of this SER and found acceptable.

TS 4.1, Specification 3, helps ensure the identification of any changes in the reactor core by performing a verification of core configuration prior to the first reactor startup of the day. The NRC staff reviewed this surveillance interval and finds that it is acceptable to detect changes in core configuration and is consistent with the guidance in NUREG-1537 and ANSI/ANS-15.1-2007. Therefore, the NRC staff finds TS 4.1, Specification 3, acceptable.

TS 4.1, Specifications 4 through 6, are evaluated in Section 2.2.1 of this SER and found acceptable.

5.4.2 TS 4.2 Reactor Control and Safety Systems

TS 4.2 is evaluated in Sections 2.2.2 and 2.5.3 of this SER and found acceptable.

5.4.3 TS 4.3 Primary Coolant System

TS 4.3 is evaluated in Section 2.3 of this SER and found acceptable.

5.4.4 TS 4.4 Confinement and Ventilation System

TS 4.4 is evaluated in Section 3.1.4 of this SER and found acceptable.

5.4.5 TS 4.5 Radiation Monitoring System and Effluents

TS 4.5.1, "Radiation Monitoring System," states the following:

Specifications

1. A CHANNEL CALIBRATION shall be made for the CHANNEL listed in Section 3.5 annually, at intervals not to exceed 15 months or whenever maintenance or repairs are made that could affect its calibration.

2. A CHANNEL TEST shall be made for the CHANNEL listed in Section 3.5 prior to starting up the reactor to ensure it is OPERABLE.

TS 4.5.1, Specification 1, specifies the minimum number of area monitors that are required to be operable. TS 4.5.1, Specifications 1 and 2, help ensure that the various area radiation monitors are operable prior to reactor startup and calibrated on an annual basis to help ensure compliance with 10 CFR Part 20. The NRC staff reviewed and finds that TS 4.5.1, Specifications 1 and 2, the annual area radiation monitor channel calibrations constitute a schedule sufficient to identify any changes to the operating characteristics of the monitoring systems, consistent with ANSI/ANS-15.1-2007 Section 4.7.1, and is acceptable.

TS 4.5.2, "Effluents," is evaluated in Section 3.1.1 of this SER and found acceptable.

5.4.6 TS 4.6, "Experiments"

TS 4.6 states the following:

Specifications

1. The reactivity worth of an EXPERIMENT shall be estimated or measured, as appropriate, before reactor operation with said EXPERIMENT.

2. An EXPERIMENT shall not be installed in the reactor or its irradiation facilities unless a safety analysis has been performed and reviewed for compliance with Section 3.6 by the Reactor Safety Committee or Director, in full accord with Sections 6.1.2, 6.2.1, and 6.5 of these Technical Specifications and the procedures which are established for this purpose.

TS 4.6, Specification 1, requires that the reactivity worth of an experiment be estimated or measured prior to reactor operation with the experiment to help ensure that the reactivity limits in TS 3.6, Specifications 1 and 2, are satisfied. The NRC staff have reviewed TS 4.6, Specification 1 and finds it helps ensure that the reactivity worth of an experiment is determined before its use in the MUTR, to confirm meeting TS 3.6, Specifications 1 and 2.

TS 4.6, Specification 2, requires that an experiment not be inserted into the reactor or its facilities unless a safety analysis has been performed and reviewed by the MUTR Director or Reactor Safety Committee in accordance with the TSs.

The NRC staff reviewed TS 4.6, Specifications 1 and 2, on the surveillance requirements for controlling experiments. Section 2.5.1 of this SER further discusses the reactivity worth of experiments. The NRC staff finds that TS 4.6 is consistent with the guidance in NUREG-1537 and ANSI/ANS-15.1-2007. On this basis, the NRC staff concludes that TS 4.6 is acceptable.

5.5 TS 5, "Design Features"

5.5.1 TS 5.1, "Site Characteristics"

TS 5.1 states the following:

Specifications

1. The reactor shall be housed in a closed room, with free air volume of 1700 m^3, designed to restrict leakage. The closed room does not include the west balcony area.

2. The licensed reactor site boundary shall consist of the outer walls of the reactor building and the area enclosed by the loading dock fence.

3. The restricted area shall consist of all areas interior to the reactor building including the west balcony and lower entryway.

4. The controlled area shall consist of all areas interior to the reactor building including the west balcony and lower entryway.

TS 5.1, Specification 1, provides the location of the reactor and features of the reactor building. The NRC staff reviewed TS 5.1, Specification 1 and finds it helps ensure that the confinement has adequate volume to provide sufficient dilution to keep occupational doses below the limits in 10 CFR Part 20, Subpart C, "Occupational Dose Limits." In response to RAI No. 1a (Ref. 43), the license provided measured leakage rates from the reactor building. The NRC staff reviewed RAI No. 1a and TS 5.1, Specification 1 and finds the reactor building's leakage is sufficient to keep public doses below the limits in 10 CFR Part 20, Subpart D, "Radiation Dose Limits for Individual Members of the Public," and that the specification is acceptable.

TS 5.1, Specification 2 describes the licensed boundary for MUTR. The NRC staff reviewed TS 5.1, Specification 2 and finds that the restricted area, controlled area, and emergency planning are within the site boundary. The NRC staff finds that TS 5.1, Specifications 2, is consistent with the definition in 10 CFR Part 20, and the emergency plan; and that the specification is acceptable.

TS 5.1, Specification 3 describes the MUTR restricted area where activities with radiation and radioactive materials takes place. The NRC staff reviewed TS 5.1, Specification 3 and finds that the restricted area helps ensure that the radiation protection program can protect individuals against undue risks from exposure to radiation and radioactive materials. The NRC staff finds that TS 5.1, Specifications 3, is consistent with the definition in 10 CFR Part 20; and that the specification is acceptable.

TS 5.1, Specification 4, describes the MUTR controlled areas. The NRC staff reviewed TS 5.1, Specification 4 and finds that the restricted area does not extend outside the controlled area,

and that the controlled area does not extend outside the licensed site boundary. The NRC staff finds that TS 5.1, Specifications 4, is consistent with the definitions in 10 CFR Parts 20 and 70; and that the specification is acceptable.

5.5.2 TS 5.2, "Reactor Primary Coolant System"

TS 5.2 is evaluated in Section 2.3 of this SER and found acceptable.

5.5.3 TS 5.3 "Reactor Core and Fuel"

TS 5.3 is evaluated in Section 2.2 of this SER and found acceptable.

5.5.3.1 TS 5.3.1, "Reactor Fuel"

TS 5.3.1 is evaluated in Section 2.2.1 of this SER and found acceptable.

5.5.3.2 TS 5.3.2, "Control Rods"

TS 5.5.3.2 is evaluated in Section 2.2.2 of this SER and found acceptable.

5.5.4 TS 5.4, "Fissionable Material Storage"

TS 5.4 states the following:

<u>Specifications</u>

1. All FUEL ELEMENTS and FUELED DEVICES shall be stored either in a geometrical array where the k_{eff} is less than 0.8 for all conditions of moderation and reflection or stored in an approved fuel shipping container.

2. Irradiated fuel elements and fueled devices shall be stored in an array which will permit sufficient natural convection cooling by water or air such that the FUEL ELEMENT or FUELED DEVICE temperature will not exceed design values.

3. When fuel is in storage in any area other than the grid plate, that area shall be equipped with monitoring devices that both measure and record the radiation levels and temperature of the region surrounding the fuel.

TS 5.4, Specification 1, limits the effective multiplication factor (k_{eff}) value of fuel elements and fueled devices to less than 0.8. The NRC staff reviewed the k_{eff} used and finds that it is lower than the k_{eff} value of 0.9 recommended in NUREG-1537 and ANSI/ANS-15.1-2007. The NRC staff finds that the value is more conservative and helps provide adequate margin to criticality for the storage of fuel elements, fueled devices or fueled experiments.

TS 5.4, Specification 2, provides the basic design requirement to help ensure adequate cooling by natural convection cooling, either by water or air, of stored irradiated fuel elements and fueled devices such that their temperature will not exceed any design values.
TS 5.4, Specification 3, requires the monitoring of storage area radiation levels and coolant temperatures to help ensure that the stored fuel elements and devices do not create radiation hazards (criticality) or exceed design temperatures. The NRC staff reviewed TS 5.4, Specification 3, and finds that it helps meet the basic design requirements to prevent the fuel

from obtaining uncontrolled criticality or from lacking sufficient cooling to prevent overheating and surface corrosion.

The NRC staff reviewed TS 5.4, Specifications 1 through 3, and finds that they are consistent with the regulations in 10 CFR 70.24(a) and guidance in NUREG-1537 and ANSI/ANS-15.1-2007. Based on the information provided above, the NRC staff concludes that TS 5.4, Specifications 1 through 3, are acceptable.

5.6 TS 6, "Administrative Controls"

TS 6 provides the requirements for the conduct of operations at the MUTR. The administrative controls presented in TS 6 include facility organization, responsibilities, training, operational review and audits, experiment reviews and approval, procedures, required actions, and reports and records.

The primary guidance for the development of administrative controls for research reactor operation is in NUREG-1537 and ANSI/ANS-15.1-2007. The TSs are based on these standards. In some cases, the licensee's proposed wording was not identical to that in NUREG-1537 and ANSI/ANS-15.1-2007. However, the NRC staff considered these cases in its review and determined that the licensee's proposed administrative controls have met the intent of the guidance and are acceptable.

5.6.1 TS 6.1, "Organization"

TS 6.1 states the following:

> The Maryland University Training Reactor (MUTR) shall be owned and operated by the University of Maryland, College Park. The position of the MUTR within the University of Maryland structure is show in Figure 6.1. The university shall provide whatever resources are required to maintain the facility in a condition that poses no hazard to the general public or to the environment.

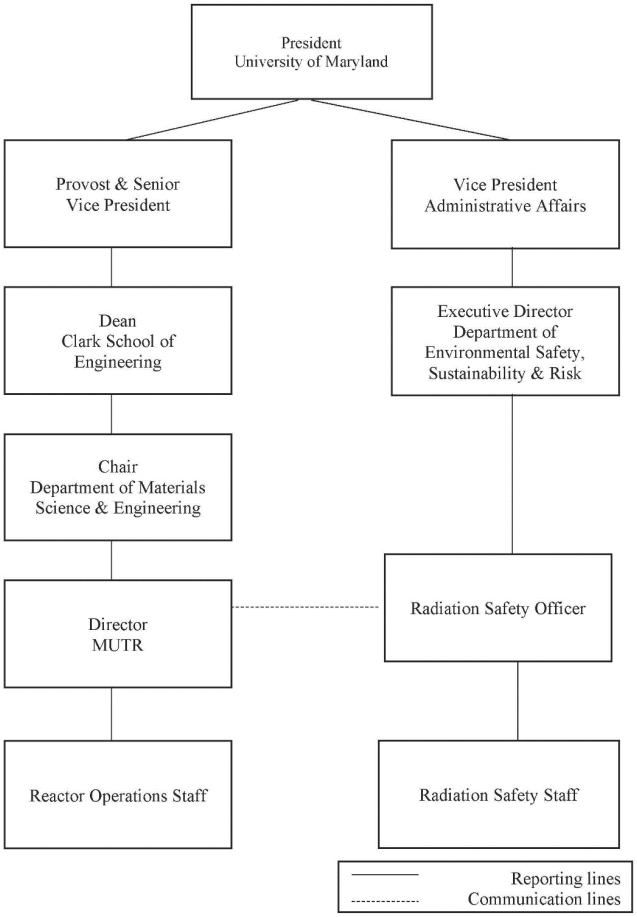

Figure 6.1: Position Chart

> The Dean of the A. James Clark School of Engineering and the Chair of the Department of Materials Science and Engineering shall be responsible for adhering to all requirements of the OPERATING license. The Director of MUTR shall be responsible for the administration and safe operation of the facility. The Reactor Safety Committee shall advise the director of MUTR on matters pertaining to safety. The Radiation Safety Officer shall provide onsite advice concerning personnel radiological safety and provides assistance and review in the area of radiation protection.

TS 6.1.1, “Structure,” states the following:

1. A line management organizational structure, Figure 6.2, shall provide for personnel who will administrate and operate the reactor facility. The members listed in the organization chart shall be responsible for safeguarding the public and facility personnel from undue radiation exposure and for adhering to all requirements of the OPERATING license.

2. Management levels:

   (a) Level 1: Dean, A. James Clark School of Engineering and Chair, Department of Materials Science & Engineering: Shall be responsible for MUTR facility license.

   (b) Level 2: Director, MUTR: Shall be responsible for reactor facility operation, adherence to the regulations, facility license, the technical specifications, and shall report to Level 1.

   (c) Level 3: Supervisory SENIOR REACTOR OPERATORS: Shall be responsible for the day-to-day operation of the MUTR including shift operation and shall report to Level 2.

   (d) Level 4: Operating Staff: Licensed REACTOR OPERATORS, SENIOR REACTOR OPERATORS, and trainees. These individuals shall report to Level 3.

TS 6.1.2, “Responsibility,” states the following:

> Responsibility for the safe operation of the reactor facility shall be in accordance with the line organization established in Figure 6.2. In all instances, responsibilities of one level may be assumed by designated alternates or by higher levels, conditional upon appropriate qualifications.

TS 6.1.2, in conjunction with TS 6.1 and the organizational charts in TS 6.1.1 (TS Figures 6.1 and 6.2), presents both the responsibilities and organization of individuals associated with the safe operation of the MUTR facility. TS 6.1.1 also shows the organizational responsibilities and arrangement for the radiation protection function. TS 6.1.1, Figures 6.1 and 6.2, identify the reporting and communication relationships between the organizational units. TS 6.1.2 also describes the organization and responsibilities of individuals in direct control of the facility. The NRC staff reviewed TS 6.1, TS 6.1.1, and TS 6.1.2 and finds that the organizational responsibilities delineated in those TS are consistent with the guidance in NUREG-1537 and ANSI/ANS-15.1-2007. On this basis, the NRC staff concludes that TS 6.1, TS 6.1.1, and TS 6.1.2 are acceptable.

TS 6.1.3, “Staffing,” states the following:

1. The minimum staffing when the reactor is not secured shall be:

   (a) A licensed REACTOR OPERATOR (RO) or a licensed SENIOR REACTOR OPERATOR (SRO) shall be present in the control room.

   (b) A minimum of two persons shall be present in the facility or in the Chemical & Nuclear Engineering Building while the reactor is not secured: the operator in the control room and a second person who can be reached from the control room who

is able to carry out prescribed written instructions which may involve activating elements of the Emergency Plan, including evacuation and initial notification procedures.

(c) A licensed SRO shall be present or readily available ON CALL. "Readily available ON CALL" means an individual who

i. has been specifically designated and the designation known to the operator on duty,
ii. keeps the operator on duty informed of where he/she may be rapidly contacted and the method of contact, and
iii. is capable of arriving at the reactor facility within a reasonable amount of time under normal conditions. At no time while the reactor is not secured shall the designated SRO be more than thirty minutes or ten miles from the facility.

2. A list of reactor facility personnel by name and telephone number shall be readily available in the control room for use by the operator. The list shall include:

(a) management personnel,

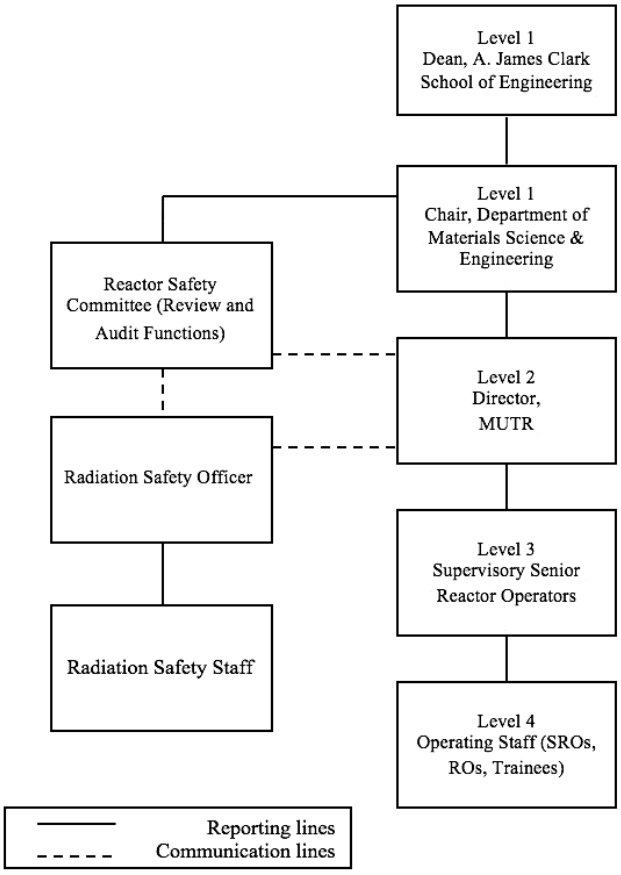

Figure 6.2: Organizational chart

(b) radiation safety personnel,
(c) other operations personnel.

3. The following operations shall be supervised by a SENIOR REACTOR OPERATOR:

   (a) Initial startup and approach to power for a startup requiring a startup checklist
   (b) When EXPERIMENTS are being manipulated in or near the core that have an estimated worth greater than $0.80
   (c) Removal of CONTROL RODS or fuel manipulations in the core
   (d) Recovery from unplanned or UNSCHEDULED SHUTDOWN or unplanned significant power reduction (greater than 10%).

TS Figures 6.1 and 6.2 show the MUTR in relationship to the organization of the University of Maryland (UMD) and the organizational structure of the MUTR, respectively.

TS 6.1.3, Specification 1, Items a through c, describe the minimum staffing necessary to safely operate the MUTR. The regulations in 10 CFR 50.54(k) state, "An operator or senior operator licensed pursuant to part 55 of this chapter shall be present at the controls at all times during the operation of the facility." The NRC staff reviewed TS 6.1.3, Specification 1, and finds that it is consistent with the guidance in NUREG-1537 and ANSI/ANS-15.1-2007 and meets the requirements of 10 CFR 50.54(k).

TS 6.1.3, Specification 2, Items a though c, describe those key personnel whose names and telephone numbers must be readily available in the control room. The NRC staff reviewed TS 6.1.3, Specification 2, and finds that it helps ensure that support personnel are readily available to the operating staff and is consistent with the guidance in NUREG-1537 and ANSI/ANS-15.1-2007.

TS 6.1.3 Specification 3, Items a though d, require a senior reactor operator to be present for certain reactor operations. The regulations in 10 CFR 50.54(m)(1) state, "A senior operator licensed pursuant to part 55 of this chapter shall be present at the facility or readily available on call at all times during its operation, and shall be present at the facility during initial startup and approach to power, recovery from an unplanned or unscheduled shutdown or significant reduction in power, and refueling, or as otherwise prescribed in the facility license." The NRC staff reviewed this specification and finds that it is in compliance with the regulations and is consistent with the guidance in NUREG-1537 and ANSI/ANS-15.1-2007.

TS 6.1.4, "Selection and Training of Personnel," states the following:

The selection, training, and requalification of operations personnel shall be in accordance with the following:

1. Responsibility: The Director or designated alternate shall be responsible for the selection, training, and requalification of the facility REACTOR OPERATORS and SENIOR REACTOR OPERATORS.

2. Selection: The selection of operations personnel shall be consistent with the standards related to selection in ANSI/ANS-15.4-2007.

3. Training Program: The Training Program shall be consistent with the standards related to training in ANSI/ANS-15.4-2007.

4. Requalification Program: The Requalification Program shall be the Requalification/Training Program for the Maryland University Training Reactor.

TS 6.1.4 establishes the criteria for the training and requalification program for operations personnel. The licensee uses ANSI/ANS-15.4-2007, "Selection and Training of Personnel for Research Reactors" (Ref. 39), as guidance for the selection and training of personnel. The NRC staff finds that TS 6.1.4 is consistent with the guidance in NUREG-1537. On this basis, the NRC staff concludes that TS 6.1.4 is acceptable. (See Section 1.1 of this SER for further discussion of the NRC staff's review of the requalification plan.)

5.6.2 TS 6.2, "Review and Audit"

TS 6.2.1, "Reactor Safety Committee," states the following:

> A Reactor Safety Committee (RSC) shall exist for the purpose of reviewing matters relating to the health and safety of the public and facility staff and the safe operation of the facility. It shall be appointed by and reports to the Chairperson of the Department of Materials Science and Engineering. The RSC shall consist of a minimum of five persons with expertise in the physical sciences and preferably some nuclear experience. Permanent members of the committee shall be the Director and the Campus Radiation Safety Officer or designated alternate, neither may serve as the committee's chairperson. Qualified alternates may serve on the committee. Alternates may be appointed by the Chairperson of the RSC to serve on a temporary basis. At least one committee member shall be from outside the Department of Materials Science and Engineering.

TS 6.2.1 helps ensure that the RSC composition, qualifications, and operation, are adequate. The function of the RSC, as outlined in TS 6.2.1, is consistent with the guidance in NUREG-1537 and ANSI/ANS-15.1-2007. On this basis, the NRC staff concludes that TS 6.2.1 is acceptable.

5.6.2.1 TS 6.2.1.1, "RSC Charter and Rules"

TS 6.2.1.1 states the following:

1. The RSC shall meet at least twice per year, and more often as required.

2. A quorum of the RSC shall be not less than half of the committee members, one of whom shall be the Campus Radiation Safety Officer (or designated alternate). No more than two alternates shall be used to make a quorum. MUTR staff members shall not constitute the majority of a voting quorum.

3. Minutes of all meetings will be retained in a file and distributed to all RSC members within 3 months.

TS 6.2.1.1, Specifications 1 through 3, establish the Reactor Safety Committee (RSC) meeting frequency, rules, and charter. The specification describes the operation of the RSC, which is responsible for an independent audit of the MUTR activities and conducts its review and audit functions in accordance with a written charter. The charter includes provisions for meeting frequency, voting rules, quorums, method of submission and content of presentations to the RSC, use of subcommittees, and minutes. NUREG-1537 and ANSI/ANS-15.1-2007 specify that the purpose of the review committee is to provide independent oversight and that the operating

staff should not constitute the majority of a quorum. The RSC charter establishes a quorum, excluding MUTR staff, which provides assurance that operations personnel will not be a majority.

The NRC staff reviewed TS 6.2.1.1 and finds that the charter and rules of the RSC, as stated in TS 6.2.1.1, Specifications 1 through 3, are consistent with the guidance in NUREG-1537 and ANSI/ANS-15.1-2007. On this basis, the NRC staff concludes that TS 6.2.1.1 is acceptable.

5.6.2.2 TS 6.2.1.2, "RSC Review Function"

TS 6.2.1.2 states the following:

> The review responsibilities of the RSC shall include, but are not limited to the following:
>
> 1. Review and evaluation of determinations of whether proposed changes to the facility, procedures, and tests or experiments shall be made under 10 CFR 50.59 or would require a change in Technical Specifications or license conditions;
> 2. All new procedures, major revisions of procedures, and proposed changes in reactor facility equipment or systems which have significant safety impact to reactor operations;
> 3. All new experiments or classes of experiments that could affect reactivity or result in the release of radioactivity;
> 4. Proposed changes to the technical specifications, or license;
> 5. Violations of technical specifications or license. Violations of internal procedures or instructions having safety significance;
> 6. OPERATING abnormalities having safety significance;
> 7. REPORTABLE OCCURRENCES listed in Section 6.7.2;
> 8. Audit reports.
>
> A written report of the findings and recommendations of the RSC shall be submitted to Level 1 management, the Director, and the RSC members within 3 months after the review has been completed.

TS 6.2.1.2, Specifications 1 through 8, help ensure that the RSC review functions are properly delineated to help ensure the safety of facility operation. The NRC staff reviewed TS 6.2.1.2 and finds that the RSC review functions specified here are consistent with the guidance in NUREG-1537 and ANSI/ANS-15.1-2007. On this basis, the NRC staff concludes that TS 6.2.1.2, Specifications 1 through 8, are acceptable.

5.6.2.3 TS 6.2.1.3, "RSC Audit Function"

TS 6.2.1.3 states the following:

1. An annual audit of the reactor operations shall be performed by an individual or group familiar with research reactor operations. The audit function shall include selective (but comprehensive) examination of operating records, logs, and other documents. Discussion with cognizant personnel and observation of operations should be used also as appropriate. In no case shall the individual responsible for the area perform an audit in that area. They shall submit a report to the Director and the Reactor Safety Committee.

2. The following shall be audited:

   (a) Facility operations for conformance to the technical specifications, applicable license conditions, and standard OPERATING procedures: at least once per calendar year (interval between audits not to exceed 15 months);

   (b) The results of action taken to correct those deficiencies that may occur in the reactor facility equipment systems, structures, or methods of operations that affect reactor safety: at least once per calendar year (interval between audits not to exceed 15 months);

   (c) The retraining and requalification program for the operating staff: at least once every other calendar year (interval between audits not to exceed 30 months); and

   (d) The reactor facility emergency plan and implementing procedures: at least once every other calendar year (interval between audits not to exceed 30 months); and

   Deficiencies uncovered that affect reactor safety shall immediately be reported to Level 1 management and the Director. A written report of the findings of the audit shall be submitted to Level 1 management, the Director, and the RSC members within 3 months after the audit has been completed.

TS 6.2.1.3 establishes the RSC audit function's scope and independence requirements. The NRC staff reviewed TS 6.2.1.3 and finds that the RSC audit functions as specified in TS 6.2.1.3 are consistent with the guidance provided in NUREG-1537 and ANSI/ANS-15.1-2007. Based on the information above, the NRC staff concludes that TS 6.2.1.3 is acceptable.

5.6.3 TS 6.3, "Radiation Safety"

TS 6.3 is evaluated in Section 3.1.2 of this SER and found acceptable.

5.6.4 TS 6.4, "Operating Procedures"

TS 6.4 states the following:

Written operating procedures shall be prepared, reviewed, and approved before initiating any of the activities listed in this section. The procedures shall be reviewed and approved by the Director or a designated alternate, the Reactor Safety Committee, and shall be documented in a timely manner. The procedures shall be adequate to assure the safety of

the reactor, but shall not preclude the use of independent judgment and action should the situation require such. OPERATING procedures shall be used for the following items:

1. Start-up, operation, and shutdown of the reactor;

2. Installation or removal of FUEL ELEMENTS, CONTROL RODS, EXPERIMENTS, and EXPERIMENTAL FACILITIES ;

3. Maintenance procedures that could have an effect on reactor safety;

4. Periodic surveillance checks, calibrations, and inspections required by the Technical Specifications or those that may have an effect on reactor safety;

5. Administrative controls for operations and maintenance and for the conduct of irradiations and EXPERIMENTS that could affect reactor safety or core reactivity;

6. For any activity pertaining to shipping, possession, and transfer of radioactive material, these procedures shall be written in conjunction with the Radiation Safety Office and the Radiation Safety Officer who shall inform the Reactor Director of any changes in regulations or laws that may require modification of these procedures. All shipping and receiving of radioactive material shall be performed in conjunction with, and with the approval of the Radiation Safety Office.

7. Implementation, maintenance, and modification to the Emergency Plan;

8. Implementation, maintenance, and modification to the Security Plan;

9. Implementation, maintenance, and modification to the Radiation Protection Plan. The Radiation Protection Plan shall include an ALARA plan as defined in ANSI/ANS-15.11-1993 (R2004);

Substantive changes to the previous procedures shall be made effective only after documented review by the review group and approval by the director or designated alternate. Minor modifications to the original procedures that do not change their original intent may be made by Level 3 or higher, but the modifications must be approved by the director or designated alternate. Temporary deviations from the procedures may be made by the responsible SENIOR REACTOR OPERATOR or higher individual present, in order to deal with special or unusual circumstances or conditions. Such deviations shall be documented and reported within 24 hours or the next working day to the Director or designated alternate.

TS 6.4, Specifications 1 through 9, help ensure that procedures are written, reviewed, and approved before performance of important activities listed in the TSs. The NRC staff reviewed TS 6.4, Specifications 1 through 9, and finds that a change to a procedure that affects a method of performing or controlling a design function of the facility will be evaluated by the RSC. The NRC staff notes that all changes to procedures, substantive, minor, or temporary, are subject to the requirements of 10 CFR 50.59. The NRC staff finds the specifications are consistent with the guidance in NUREG-1537, ANSI/ANS-15.1-2007, and the regulations in 10 CFR 50.59. On this basis, the NRC staff concludes that TS 6.4 is acceptable.

5.6.5 TS 6.5, "Experiment Review and Approval"

TS 6.5 states the following:

> Approved EXPERIMENTS shall be carried out in accordance with established and approved procedures.

1. All new experiments or class of experiments shall be reviewed by the RSC as required by TS 6.2.3 and implementation approved in writing by the Director or a designated alternate.

2. Substantive changes to previously approved EXPERIMENTS shall be made only after review by the RSC and implementation approved in writing by the Director or a designated alternate. Minor changes that do not significantly alter the EXPERIMENT may be approved by Level 3 or higher. Changes to experiments shall meet the requirements in accordance with 10 CFR 50.59.

TS 6.5, Specifications 1 and 2, specify review and approval of different types of experiments before they are performed at the MUTR and the extent of the required analysis. The NRC staff reviewed TS 6.5 and finds it helps ensure acceptable management control over experiments, and that experiments and changes to experiments will be evaluated. The NRC staff reviewed TS 6.5 and finds that it is consistent with the guidance in NUREG-1537, ANSI/ANS-15.1-2007 and the regulations in 10 CFR 50.59. On this basis, the NRC staff concludes that TS 6.5 is acceptable.

5.6.6 TS 6.6, "Required Actions"

TS 6.6.1, "Action to be Taken in the Event of a Safety Limit Violation," states the following:

> In the event a SAFETY LIMIT is violated:
>
> 1. The reactor shall be shut down and reactor operation shall not be resumed until authorized by the NRC.
>
> 2. The event shall be reported to the Director who will report to the NRC as required in section 6.7.2.
>
> 3. An immediate report of the occurrence shall be made to the Chairman of the Reactor Safety Committee, and
>
> 4. A report, and any follow-up report, shall be prepared. The report shall describe the following:
>
> (a) Applicable circumstances leading to the violation, including when known, the cause, and contributing factors;
> (b) Effect of the violation upon reactor facility components, systems, or structures and on the health and safety of personnel and the public; and
> (c) Corrective action to be taken to prevent recurrence.
>
> The report shall be reviewed by the Reactor Safety Committee and submitted to the NRC when authorization is sought to resume operation of the reactor.

TS 6.6.1, Specifications 1 through 4, help ensure that the proper actions are taken if a SL violation occurs. TS 6.6.1 require the facility to shut down if an SL is exceeded. The facility may not resume operation without authorization from the NRC. The violation must also be reported to the RSC and the NRC. TS 6.7.2 details the reporting requirement, specifying that the NRC must be notified within 24 hours by telephone and a report must be submitted to the NRC within 14 days. TS 6.6.1, Specification 4c, requires the report to contain corrective actions to be taken to prevent recurrence.

The NRC staff reviewed TS 6.6.1 and finds that it meets the requirements of 10 CFR 50.36(c)(1) for actions to be taken if an SL is exceeded. The NRC staff also finds that the actions the licensee proposed are consistent with the guidance in NUREG-1537 and ANSI/ANS-15.1-2007. On this basis, the NRC staff concludes that TS 6.6.1 is acceptable.

TS 6.6.2, "Actions to Be Taken In The Event Of a Reportable Occurrence," states the following:

> In the event of a REPORTABLE OCCURRENCE, the following actions shall be taken:
>
> 1. Immediate action shall be taken to correct the situation and to mitigate the consequences of the occurrence.
>
> 2. The reactor shall be shut down and reactor operation shall not be resumed until authorized by the Director.
>
> 3. The event shall be reported to the Director who will report to the NRC as required in section 6.7.2.
>
> 4. The Reactor Safety Committee shall investigate the causes of the occurrence at its next meeting. The report shall include an analysis of the causes of the occurrence, the effectiveness of corrective actions taken, and recommendations of measures to prevent or reduce the probability or consequences of recurrence.

TS 6.6.2 helps ensure that the proper actions are taken following a reportable occurrence. TS 6.6.2 requires the facility to shut down in the event of a reportable occurrence. The event must be reported to the Facility Director, who must authorize resumption of reactor operation. TS 6.7.2 also details the reporting requirement, specifying that the NRC must be notified within 24 hours by telephone and a report must be submitted to the NRC within 14 days. The RSC also investigates the occurrence. The NRC staff reviewed the licensee's proposed actions and finds that they are consistent with the guidance in NUREG-1537 and ANSI/ANS-15.1-2007. On this basis, the NRC staff concludes that TS 6.6.2 is acceptable.

5.6.7 TS 6.7, "Reports"

TS 6.7.1, "Annual Operating Report," states the following:

> An annual report covering the operation of the reactor facility during the previous calendar year shall be submitted to the NRC before March 31 of each year providing the following:
>
> 1. A brief narrative summary of results of reactor operations and surveillance tests and inspections required in section 4.0 of these Technical Specifications

2. A tabulation showing the energy generated in MW-hr for the year

3. A list of UNSCHEDULED SHUTDOWNS including the reasons therefore and corrective action taken, if any

4. A tabulation of the major maintenance operations performed during the period, including the effects, if any, on safe operation of the reactor, and the reason for any corrective maintenance required

5. A brief description of

   (a) Each change to the facility to the extent that it changes a description of the facility in the Final Safety Analysis Report
   (b) Review of changes, tests, and experiments made pursuant to 10 CFR Part 50.59

6. (...)

7. A description of any environmental surveys performed outside of the facility

8. A summary of exposure received by facility personnel and visitors where such exposures are greater than 25% of limits allowed by 10 CFR Part 20

9. Changes in facility organization

TS 6.7.1, Specification 6, is evaluated in Section 3.1.2 of this SER and found acceptable.

The NRC staff reviewed TS 6.7.1, Specifications 1 through 5 and 7 through 9, finds that they help ensure that adequate annual reporting information is maintained and provided to the NRC. The NRC staff reviewed the licensee's annual reports (Refs. 50 through 54) and finds that they provide information on the status of the facility, major changes, radiation exposures, and other pertinent topics. The NRC staff also finds that that the annual reporting requirements in TS 6.7.1 are consistent with the guidance in NUREG-1537 and ANSI/ANS-15.1-2007. On this basis, the NRC staff concludes that TS 6.7.1 is acceptable.

TS 6.7.2, "Special Reports," states the following:

> Notification shall be made within 24 hours by telephone and confirmed in writing by fax or similar conveyance to the NRC Headquarters Operation Center, and followed by a written report that describes the circumstances of the event and sent within 14 days to the U.S. Nuclear Regulatory Commission, Attn: Document Control Desk, of any of the following:
>
> 1. A REPORTABLE OCCURRENCE,
>
> 2. Release of radioactivity from the site above allowed limits,
>
> 3. Exceeding the SAFETY LIMIT.
>
> A written report within 30 days to the U.S. Nuclear Regulatory Commission, Attn: Document Control Desk, of:

1. permanent changes in the facility organization involving Level 1 and Level 2 personnel; and

2. significant changes in the accident analysis as described in the Safety Analysis Report.

TS 6.7.2 helps ensure that special reporting requirements are met. The NRC staff reviewed TS 6.7.2 for making special reports for unplanned events. The NRC finds that "reportable occurrence" is defined in Section 1 of these TSs. The NRC finds that these five specifications in conjunction with the definition "reportable occurrence" are consistent with the guidance in ANSI/ANS-15.1-2007. On this basis, the NRC staff concludes that TS 6.7.2 is acceptable.

5.6.8 TS 6.8 "Records"

TS 6.8 states the following:

> Records of facility operations in the form of logs, data sheets, or other suitable forms shall be retained for the period indicated as follows:

5.6.8.1 TS 6.8.1, "Records to be Retained for a Period of at Least Five Years or for the Life of the Component Involved"

1. Normal reactor facility operation (but not including supporting documents such as checklists, log sheets, etc. which shall be maintained for a period of at least one year),

2. REPORTABLE OCCURRENCES,

3. Principal maintenance operations,

4. Surveillance activities required by the technical specifications,

5. Reactor facility radiation and contamination surveys where required by applicable regulations,

6. EXPERIMENTS performed with the reactor,

7. Fuel inventories, receipts, and shipments,

8. Approved changes in OPERATING procedures, and

9. Records of meeting and audit reports of the RSC.

TS 6.8.1, Specifications 1 through 9, help ensure that certain records are retained for five years or an appropriate lesser period. The NRC staff reviewed TS 6.8.1, Specifications 1 through 9 and finds that it is consistent with the guidance in ANSI/ANS-15.1-2007 Section 6.8.1. On this basis, the NRC staff concludes that TS 6.8.1, Specifications 1 through 9, are acceptable.

5.6.8.2 TS 6.8.2, "Records to be Retained for at Least One License Cycle"

> Records of retraining and requalification of licensed operations personnel shall be maintained at all times the individual is employed or until the license is renewed.

TS 6.8.2 helps ensure that certain records are retained for at least one certification cycle. The NRC staff reviewed, TS 6.8.2, and finds that it is consistent with the guidance in ANSI/ANS-15.1-2007 Section 6.8.2 and conforms to the regulations in 10 CFR 55.59(c)(5)(i). On this basis, the NRC staff concludes that TS 6.8.2 is acceptable.

5.6.8.3 TS 6.8.3, "Records to be Retained for the Lifetime of the Reactor Facility"

> (…)
>
> 4. Drawings of the reactor facility, and
>
> 5. Reviews and reports pertaining to a violation of the SAFETY LIMIT, the limiting safety system setting, or a limiting condition of operation.

TS 6.8.3, Specifications 1 and 3, are reviewed and found acceptable in SER Section 3.1.2. TS 6.8.3, Specification 2, is reviewed and found acceptable in SER Section 3.1.7.

TS 6.8.3, Specifications 4 and 5, help to ensure that the appropriate records are retained for the lifetime of the facility. The NRC staff reviewed TS 6.8.3, Specifications 4 and 5, and finds that they are consistent with the guidance in ANSI/ANS-15.1-2007, Section 6.8.3. On this basis, the NRC staff concludes that TS 6.8.3, Specifications 1 through 5, are acceptable.

5.7 Conclusions

The NRC staff reviewed and evaluated the TSs as part of its review of the application for license renewal of Facility Operating License No. R-70, NRC Docket No. 50-166, for the MUTR. The TSs define certain features, characteristics, and conditions governing MUTR operation. The renewed license explicitly includes the TS as Appendix A. The NRC staff specifically reviewed and evaluated the content of the TS to determine whether the TSs meet the requirements in 10 CFR 50.36. Based on its review, the NRC staff concludes that the proposed TSs do meet the requirements of the regulations. The NRC staff concludes that the TSs are acceptable for the following reasons:

- To satisfy the requirements of 10 CFR 50.36(a), the licensee provided proposed TSs with the application for license renewal. As required by the regulations, the proposed TSs included the appropriate summary bases for the TSs. Those summary bases are included in the TSs but are not specifications, as required by 10 CFR 50.36(a)(1).

- The MUTR is a facility of the type described in 10 CFR 50.21(c); therefore, 10 CFR 50.36(b), requires that the facility operating license include TSs. To satisfy the requirements of 10 CFR 50.36(b), the licensee provided TSs derived from analyses in the SAR, as supplemented.

- To satisfy the requirements of 10 CFR 50.36(c)(1), the licensee provided proposed TSs specifying an SL on fuel temperature and an LSSS for the reactor protection system to preclude reaching the SL.

- The proposed TSs acceptably implement the recommendations of NUREG-1537 and ANSI/ANS-15.1-2007 by using definitions that are acceptable.

- The proposed TSs contain limiting conditions for operation on each item that meets one or more of the criteria specified in 10 CFR 50.36(c)(2)(ii).

- The proposed TSs contain surveillance requirements that satisfy the requirements of 10 CFR 50.36(c)(3).

- The proposed TSs contain design features that satisfy the requirements of 10 CFR 50.36(c)(4).

- The proposed TSs contain administrative controls that satisfy the requirements of 10 CFR 50.36(c)(5). UMD's administrative controls contain requirements for initial notification, written reports, and records that meet the requirements specified in 10 CFR 50.36(c)(1), (2), (7), and (8).

The NRC staff reviewed the proposed TSs and finds the proposed TSs acceptable and concludes that normal operation of the MUTR within the limits stated in the proposed TSs will not result in radiation exposures in excess of the limits specified in 10 CFR Part 20 for members of the public or for the MUTR staff. The NRC staff concludes that the proposed TSs provide reasonable assurance that the MUTR will be operated as analyzed in the SAR, as supplemented, and that adherence to the TSs will limit the likelihood of malfunctions and the potential accident scenarios discussed in Chapter 4 of this SER.

6 CONCLUSIONS

On the basis of its evaluation of the Maryland University Training Reactor's (MUTR's) application for license renewal, as discussed in the previous chapters of this safety evaluation report, the staff of the U.S. Nuclear Regulatory Commission (NRC) concludes the following:

- The application for license renewal, dated May 12, 2000, as supplemented by letters dated June 7, August 4, September 17, and October 7, 2004; April 18, 2005; April 25 (two letters), August 28 (two letters), September 7, November 9, and December 18, 2006; May 27, July 28, and September 22, 2010; January 31, February 2, May 2, July 5, July 29, September 26, September 28, and October 12, 2011; February 9, March 14, May 22, and August 29, 2012; March 21, 2013; April 10, June 18, and November 25, 2014 (two letters); July 1, November 23, and December 2, 2015; and January 5, February 29, November 1, November 2, November 10, November 17 (two letters), and December 2, 2016, complies with the standards and requirements of the Atomic Energy Act (AEA) of 1954, as amended and the NRC's rules and regulations set forth in Title 10 of the *Code of Federal Regulations* (10 CFR).

- The facility will operate in conformity with the application, as supplemented, and with the provisions of the AEA and the rules and regulations of the Commission.

- There is reasonable assurance that (1) the activities authorized by the renewed license can be conducted at the designated location without endangering public health and safety and (2) such activities will be conducted in compliance with the rules and regulations of the Commission.

- The facility will continue to be useful in the conduct of research and development activities.

- The licensee is technically and financially qualified to engage in the activities authorized by the renewed license, in accordance with the rules and regulations of the NRC.

- The licensee has satisfied the applicable provisions of 10 CFR Part 140, "Financial Protection Requirements and Indemnity Agreements."

- The issuance of the renewed facility operating license will not be inimical to the common defense and security or to public health and safety.

- The issuance of this license is in accordance with 10 CFR Part 51, "Environmental Protection Regulations for Domestic Licensing and Related Regulatory Functions," of NRC regulations, and all applicable requirements have been satisfied.

- The receipt, possession, and use of byproduct and special nuclear materials as authorized by this facility operating license will be in accordance with the NRC regulations in 10 CFR Part 30, "Rules of General Applicability to Domestic Licensing of Byproduct Material," and 10 CFR Part 70, "Domestic Licensing of Special Nuclear Material."

7 REFERENCES

1. University of Maryland, "Requesting a Renewal of Operating License No. R-70," May 12, 2000, Agencywide Documents Access and Management System (ADAMS) Accession No. ML052910399 (Enclosure 2, "Updated Safety Analysis Report for the Maryland University Training Reactor," Enclosure 3, "Environmental Report," and Enclosure 4, "Technical Specifications").

2. Al-Sheikhly, Mohamad, University of Maryland, letter to Alexander Adams, Jr., U.S. Nuclear Regulatory Commission, Response to request for additional information as it pertains to Sections 6 through 10 of the Safety Analysis Report, June 7, 2004, ADAMS Accession No. ML101970211.

3. Al-Sheikhly, Mohamad, University of Maryland, letter to Alexander Adams, Jr., U.S. Nuclear Regulatory Commission, Response to request for additional Information as it pertains to the Environmental Report for the Maryland University Training Reactor, August 4, 2004, ADAMS Accession No. ML042240227.

4. Al-Sheikhly, Mohamad, University of Maryland, letter to Alexander Adams, Jr., U.S. Nuclear Regulatory Commission, Response to request for additional Information as it pertains to Section 11 of the Safety Analysis Report for the Maryland University Training Reactor, September 17, 2004, ADAMS Accession No. ML042940317.

5. Al-Sheikhly, Mohamad, University of Maryland, letter to Alexander Adams, Jr., U.S. Nuclear Regulatory Commission, Response to request for additional information as it pertains to Section 12 of the Safety Analysis Report for the Maryland University Training Reactor, October 7, 2004, ADAMS Accession No. ML042940408.

6. Al-Sheikhly, Mohamad, University of Maryland, letter to Alexander Adams, Jr., U.S. Nuclear Regulatory Commission, Response to request for additional Information as it pertains to the Technical Specifications for the Maryland University Training Reactor, April 18, 2005, ADAMS Accession No. ML051160054.

7. Al-Sheikhly, Mohamad, University of Maryland, letter to Marcus Voth, U.S. Nuclear Regulatory Commission, Response to request for additional information as it pertains to Section 2 of the Safety Analysis Report for the Maryland University Training Reactor, April 25, 2006, ADAMS Accession No. ML061250233.

8. Al-Sheikhly, Mohamad, University of Maryland, letter to Marcus Voth, U.S. Nuclear Regulatory Commission, Response to request for additional information as it pertains to Section 16 of the Safety Analysis Report for the Maryland University Training Reactor, April 25, 2006, ADAMS Accession No. ML061280383.

9. Al-Sheikhly, Mohamad, University of Maryland letter to Marcus Voth, U.S. Nuclear Regulatory Commission, Response to request for additional information as it pertains to the financial responsibility report for the Maryland University Training Reactor, August 28, 2006, ADAMS Accession No. ML101480914.

10. Al-Sheikhly, Mohamad, University of Maryland, letter to Marcus Voth, U.S. Nuclear Regulatory Commission, Response to request for additional information pertaining to Questions 54–57 and 65 regarding the Safety Analysis Report for the Maryland University Training Reactor, August 28, 2006, ADAMS Accession No. ML101970209.

11. Al-Sheikhly, Mohamad, University of Maryland, letter to Marcus Voth, U.S. Nuclear Regulatory Commission, Response to request for additional information regarding Questions 58–64 of the Safety Analysis Report, November 9, 2006, ADAMS Accession No. ML101970210.

12. Al-Sheikhly, Mohamad, University of Maryland, letter to Marcus Voth, U.S. Nuclear Regulatory Commission, Response to request for additional information as it pertains to the Technical Specifications for the Maryland University Training Reactor, December 18, 2006, ADAMS Accession No. ML101480913.

13. Al-Sheikhly, Mohamad, University of Maryland, letter to Document Control Desk, U.S. Nuclear Regulatory Commission, "Reference: University of Maryland, Response to Request for Additional Information Regarding the License Renewal for the Maryland University Training Reactor, Docket No. 5-166, License No. R-70 (TAC No. ME1592)," responses to technical RAIs 1 and 3–5, July 28, 2010, ADAMS Accession No. ML102110049.

14. Al-Sheikhly, Mohamad, University of Maryland, letter to Document Control Desk, U.S. Nuclear Regulatory Commission, "Reference: University of Maryland, Reqeust for Additional Information Regarding the License Renewal for the Maryland University Training Reactor, No. 50-166, License No. R-70 (TAC No. ME1592)," response to 41 of the 52 requests for additional information regarding technical specifications, September 22, 2010, ADAMS Accession No. ML102710556.

15. Al-Sheikhly, Mohamad, University of Maryland, letter to Document Control Desk, U.S. Nuclear Regulatory Commission, "Reference: University of Maryland, Maryland University Training Reactor ("MUTR"), Docket No. 50-166, License No. R-70 Request for Additional Information ("RAI") Regarding Remaining Technical Specifications," January 31, 2011, ADAMS Accession No. ML110320459.

16. Al-Sheikhly, Mohamad, University of Maryland,letter to Document Control Desk, U.S. Nuclear Regulatory Commission, "Reference: University of Maryland, Maryland University Training Reactor ("MUTR"), Docket No. 50-166, License No. R-70 Request for Additional Information ("RAI")," response to request for additional information #2, February 2, 2011, ADAMS Accession No. ML110350175.

17. Al-Sheikhly, Mohamad, University of Maryland, letter to Document Control Desk, U.S. Nuclear Regulatory Commission, "Reference: University of Maryland, Maryland University Training Reactor ("MUTR"), Docket No. 50-166, License No. R-70, Technical Specifications, Response to February 18, 2011, Request for Additional Information Regarding Remaining Technical Specifications," May 2, 2011, ADAMS Accession No. ML11124A124.

18. Al-Sheikhly, Mohamad, University of Maryland, letter to Document Control Desk, U.S. Nuclear Regulatory Commission, "Reference: University of Maryland, Maryland University Training Reactor ("MUTR"), Docket No. 50-166, License No. R-70, Technical Specifications, Response to February 18, 2011, Request for Additional Information ("RAI") Regarding Remaining Technical Specifications," July 5, 2011, ADAMS Accession No. ML11189A065.

19. Al-Sheikhly, Mohamad, University of Maryland, letter to Document Control Desk, U.S. Nuclear Regulatory Commission, "Reference: University of Maryland, Maryland University Training Reactor ("MUTR"), Docket No. 50-166, License No. R-70," technical specifications for the Maryland University Training Reactor and preliminary questions on UMD technical specifications, September 26, 2011, ADAMS Accession No. ML11273A076.

20. Al-Sheikhly, Mohamad, University of Maryland, letter to Document Control Desk, U.S. Nuclear Regulatory Commission, "Reference: University of Maryland, Request for Additional Information Regarding the License Renewal for the Maryland University Training Reactor ("MUTR") (TAC No. ME592), Docket No. 50-166, License No. R-70," responses to the NRC's requests for additional information issued August 26, 2011, and revised Technical Specifications, September 28, 2011, ADAMS Accession No. ML11277A026.

21. Al-Sheikhly, Mohamad, University of Maryland, letter to Document Control Desk, U.S. Nuclear Regulatory Commission, "University of Maryland, Request for Additional Information Regarding the License Renewal for the Maryland University Training Reactor ("MUTR") (TAC No. ME1592), Docket No. 50-166, License No. R-70," responses to the NRC's requests for additional information issued September 8, 2011, October 12, 2011, ADAMS Accession No. ML11286A337.

22. U.S. *Code of Federal Regulations*, Chapter I, Title 10, "Energy."

23. U.S. Nuclear Regulatory Commission, NUREG-1537, "Guidelines for Preparing and Reviewing Applications for the Licensing of Non-Power Reactors Part 1, Format and Content," and Part 2, "Standards Review Plan Acceptance Criteria," February 1996, ADAMS Accession Nos. ML042430055 and ML042430048.

24. U.S. Nuclear Regulatory Commission, "Review of Research and Test Reactor License Renewal Applications," Commission Paper SECY-08-0161, October 24, 2008, ADAMS Accession No. ML082550140.

25. Vietti-Cook, Annette L., Memorandum to R. W. Borchardt, U.S. Nuclear Regulatory Commission, "Staff Requirements—SECY-08-0161—Review of Research and Test Reactor License Renewal Applications," March 26, 2009, ADAMS Accession No. ML090850159.

26. U.S. Nuclear Regulatory Commission, "Interim Staff Guidance on the Streamlined Review Process for License Renewal for Research Reactors," October 15, 2009, ADAMS Accession No. ML092240244.

27. General Atomics, "TRIGA Reactors," GEN-10, February 2003, http://www.ga-esi.com/triga/.

28. Department of Energy Osborne, Kenny, e-mail to Hardesty, Duane, U.S. Nuclear Regulatory Commission, University Fuels Support Contracts, January 15, 2014, ADAMS Accession No. ML14022A268.

29. U.S. Department of Energy (Morgan, R.L.) letter to the U.S. Nuclear Regulatory Commission (Denton, H.), May 3, 1983. (NRC Microfiche Address: 66846: 190–192)

30. American National Standards Institute/American Nuclear Society, ANSI/ANS-15.1-2007, "The Development of Technical Specifications for Research Reactors."

31. General Atomics, M.T. Simnad, "The U-ZrH_x Alloy: Its Properties and Use in TRIGA Fuel," General Atomics Report GA-4314/E-117-833, February 1980.

32. American National Standards Institute/American Nuclear Society, ANSI/ANS-15.11-1993 (R 2004), "Radiation Protection at Research Reactor Facilities."

33. Pacific Northwest Laboratory, "Credible Accident Analyses for TRIGA and TRIGA-Fueled Reactors," PNL-4028, NUREG/CR-2387, April 30, 1982, ADAMS Accession No. ML083660125.

34. General Atomic, Shoptaugh, J.R., Jr., "Simulated Loss-of-Coolant Accident for TRIGA Reactors," GA-6596, Gulf General Atomic, San Diego, CA, August 18, 1965.

35. General Atomics, N.L. Baldwin, F.C. Foushee, and J.S. Greenwood, "Fission Product Release from TRIGA-LEU Fuels," GA-A16287, October 1980.

36. "Kinetic Behavior of Triga Reactors," GA-7882, March 31, 1967, ADAMS Accession No. ML082380271.

37. U.S. Nuclear Regulatory Commission, "Safety Evaluation Report on High-Uranium Content, Low-Enriched Uranium-Zirconium Hydride Fuels for TRIGA Reactors," NUREG-1282, August 31,1987, ADAMS Accession No. ML050480199.

38. U.S. Nuclear Regulatory Commission, "Development of Technical Specifications for Experiments in Research Reactors," Regulatory Guide 2.2, November 1973.

39. American National Standards Institute/American Nuclear Society, ANSI/ANS-15.4-1988 (R1999), "Selection and Training of Personnel for Research Reactors."

40. Koeth, Timothy W., University of Maryland, letter to Document Control Desk, U.S. Nuclear Regulatory Commission, "Subject: University of Maryland—Request for Additional Information Re: Financial Update for License Renewal for the Maryland University Training Reactor ((TAC No. ME1592) License No. 70; Docket No. 50-166," November 25, 2014, ADAMS Accession No. ML14342A563.

41. Al-Sheikhly, Mohamad, University of Maryland, letter to Document Control Desk, U.S. Nuclear Regulatory Commission, “Reference: University of Maryland, License Renewal for the Maryland University Training Reactor (“MUTR”) (TAC No. ME1592), Docket No. 50-166, License No. R-70,” Enclosure 1, “Ar-41 Occupational and Public Dose Assessment at the MUTR,” and Enclosure 2, “Accident Analysis MHA Report (updated),” March 21, 2013, ADAMS Accession No. ML13095A006.

42. Koeth, Timothy W., University of Maryland, letter to Document Control Desk, U.S. Nuclear Regulatory Commission, “Subject: University of Maryland—Report on Ar-41 Mitigation at University of Maryland Training Reactor; License No. 70; Docket No. 50-166,” June 18, 2014, ADAMS Accession No. ML14176A078.

43. Koeth, Timothy W., University of Maryland, letter to Document Control Desk, U.S. Nuclear Regulatory Commission, “Subject: University of Maryland—Request for Additional Information Re: Review of the Argon-41 Radiological Dose Assessment for License Renewal of the Maryland University Training Reactor (TAC No. ME1592) License No. 70; Docket No. 50-166,” November 25, 2014, ADAMS Accession No. ML14332A300.

44. Eads, Johnny H., Jr., U.S. Nuclear Regulatory Commission, letter to Mohamad Al-Sheikhly, University of Maryland, “University of Maryland—NRC Routine Inspection Report No. 50-166/2011-202,” January 5, 2012, ADAMS Accession No. ML113610569.

45. Bowman, Gregory T., U.S. Nuclear Regulatory Commission, letter to Mohamad Al-Sheikhly, University of Maryland, “University of Maryland—NRC Routine Inspection Report No. 50-166/2012-202,” January 4, 2013, ADAMS Accession No. ML13003A002.

46. Bowman, Gregory T., U.S. Nuclear Regulatory Commission, letter to Timothy W. Koeth, University of Maryland, “University of Maryland—NRC Routine Inspection Report No. 50-166/2014-202,” Februaury 11, 2014, ADAMS Accession No. ML14041A108.

47. Hsueh, Kevin, U.S. Nuclear Regulatory Commission, letter to Timothy W. Koeth, University of Maryland, “University of Maryland—NRC Routine Inspection Report No. 50-166/2014-203,” January 15, 2015, ADAMS Accession No. ML15014A360.

48. Mendiola, Anthony J., U.S. Nuclear Regulatory Commission, letter to Timothy W. Koeth, University of Maryland, “University of Maryland—NRC Routine Inspection Report No. 50-166/2015-201,” December 29, 2015, ADAMS Accession No. ML15362A496.

49. University of Maryland Response to U.S. NRC’s Request for Additional Information Issued March 11, 2014, “Emergency Plan,” April 10, 2014, ADAMS Accession No. ML141112A272.

50. Al-Sheikhly, Mohamad, University of Maryland, letter to Document Control Desk, U.S. Nuclear Regulatory Commission, “Annual Report: July 1, 2010–June 30, 2011, for the Maryland University Training Reactor (“MUTR”) (TAC No. ME1592), Docket No. 50-166, License No. R-70,” December 19, 2011, ADAMS Accession No. ML11363A176.

51. Al-Sheikhly, Mohamad, University of Maryland, letter to Document Control Desk, U.S. Nuclear Regulatory Commission, “Annual Report: July 1, 2011–June 30, 2012, for the Maryland University Training Reactor, Docket No. 50-166, License No. R-70, University of Maryland,” December 12, 2012, ADAMS Accession No. ML123550022.

52. Al-Sheikhly, Mohamad, University of Maryland, letter to Document Control Desk, U.S. Nuclear Regulatory Commission, “Annual Report: July 1, 2012-June 30, 2013, for the Maryland University Training Reactor, Docket No. 50-166, License No. R-70 (TAC No. ME 1592), University of Maryland,” October 22, 2013, ADAMS Accession No. ML13303B562.

53. Koeth, Timothy W., University of Maryland, letter to Document Control Desk, U.S. Nuclear Regulatory Commission, “University of Maryland—Annual Report for the University of Maryland Training Reactor License No. 70; Docket No. 50-166,” Annual Report for July 1, 2013-June 30, 2014, for the MUTR, September 30, 2014, ADAMS Accession No. ML14280A482.

54. University of Maryland, “Annual Report: July 1, 2014–June 30, 2015, for the Maryland University Training Reactor,” June 30, 2015, ADAMS Accession No. ML16028A080.

55. Al-Sheikhly, Mohamad, University of Maryland, letter to Document Control Desk, U.S. Nuclear Regulatory Commission, response to the request for additional information from October 24, 2003,” September 7, 2006, ADAMS Accession No. ML16083A222.

56. Koeth, Timothy W., University of Maryland, letter to Document Control Desk, U.S. Nuclear Regulatory Commission, “Subject: University of Maryland—Request for Additional Information for License Renewal of the Maryland University Training Reactor Pertaining to Thermal Hydraulics (TAC No. ME1592),” response to the RAI dated September 10, 2015, December 2, 2015, ADAMS Accession No. ML15349A894.

57. Koeth, Timothy W., University of Maryland, letter to Document Control Desk, U.S. Nuclear Regulatory Commission, “Subject: University of Maryland—Request for Additional Information for License Renewal of the Maryland University Training Reactor (TAC No. ME1592),” response to question #2 from the RAI dated September 21, 2015, January 5, 2016, ADAMS Accession No. ML16008A072.

58. Koeth, Timothy W., University of Maryland, letter to Document Control Desk, U.S. Nuclear Regulatory Commission, “Subject: University of Maryland—Request for Additional Information Re: For the Renewal of Facility Operating License No. R-70 the Maryland University Training Reactor Docket No. 50-166,” response to the RAI dated August 24, 2015, February 29, 2016, ADAMS Accession No. ML16061A003.

59. Al-Sheikhly, Mohamad, University of Maryland, letter to Document Control Desk, U.S. Nuclear Regulatory Commission, “Subject: University of Maryland Response to RAI,” responses to the December 10, 2009, RAI regarding financial qualifications, May 27, 2010, ADAMS Accession No. ML101670413.

60. Al-Sheikhly, Mohamad, University of Maryland, letter to Document Control Desk, U.S. Nuclear Regulatory Commission, “Reference: University of Maryland, Maryland University Training Reactor (MUTR), Docket No. 50-166, License No. R-70, Request for Additional Information (RAI) Regarding Maximum MHA Dose,” response to the NRC RAI regarding dose to the general public in the event of Maximum Hypothetical Accident, July 29, 2011, ADAMS Accession No. ML16231A339.

61. Al-Sheikhly, Mohamad, University of Maryland, letter to Document Control Desk, U.S. Nuclear Regulatory Commission, “Reference: University of MarylandMaryland, Request for Additional Information Regarding the License Renewal for the Maryland University Training Reactor (“MUTR”) (TAC No. ME1592), Docket No. 50-166, License No. R-70,” Ar-41 Measurements and Report, February 9, 2012, ADAMS Accession No. ML12060A344.

62. Al-Sheikhly, Mohamad, University of Maryland, letter to Document Control Desk, U.S. Nuclear Regulatory Commission, “Reference: University of Maryland—Request for Additional Information Re: Reactor Operator Requalification Program (TAC No. ME2431).,” March 14, 2012, ADAMS Accession No. ML12081A017.

63. Al-Sheikhly, Mohamad, University of Maryland, letter to Document Control Desk, U.S. Nuclear Regulatory Commission, “Reference: University of Maryland, Request for Additional Information Regarding the License Renewal for the Maryland University Training Reactor (“MUTR”) (TAC No. ME1592), Docket No. 50-166, License No. R-70,” updated Requalification/Training Program for the Maryland University Training Reactor, May 22, 2012, ADAMS Accession No. ML12172A139.

64. Al-Sheikhly, Mohamad, University of Maryland, letter to Document Control Desk, U.S. Nuclear Regulatory Commission, “Reference: University of Maryland, Response to Request for Additional Information Regarding the License Renewal for the Maryland University Training Reactor (“MUTR”) (TAC No. ME1592), Docket No 50-166, License No. R-70,” updated Requalification Training Program, August 29, 2012, ADAMS Accession No. ML12255A400.

65. Koeth, Timothy W., University of Maryland, letter to Document Control Desk, U.S. Nuclear Regulatory Commission, “Subject: University of Maryland—Request for Additional Information Re: Review of the Physical Security Plan for the License Renewal for the University for Maryland Training Reactor (TAC No. ME 1592) License No 70; Docket No. 50-166,” July 1, 2015, ADAMS Accession No. ML15190A343.

66. Koeth, Timothy W., University of Maryland, letter to Document Control Desk, U.S. Nuclear Regulatory Commission, “Subject: University of Maryland - Updated Physical Security Plan for the License Renewal for the University for Maryland Training Reactor (TAC No. ME1592) License No. 70; Docket No. 50-166,” November 23, 2015, ADAMS Accession No. ML16022A184.

67. Koeth, Timothy W., University of Maryland, letter to Document Control Desk, U.S. Nuclear Regulatory Commission, “Subject: University of Maryland—Revised Physical Security Plan for License Renewal of the Maryland University Training Reactor (TAC No. ME1592) License No. 70; Docket No. 50-166,” December 19, 2014, ADAMS Accession No. ML14364A086 (cover letter only).

68. Montgomery, Cindy K., U.S. Nuclear Regulatory Commission, letter to Timothy Koeth, University of Maryland, “University of Maryland—Letter Request for Additional Information Re: Physical Security Plan Review for License Renewal (TAC No. ME1592),” March 12, 2015, ADAMS Accession No. ML15058A276.

69. Koeth, Timothy W., University of Maryland, letter to Document Control Desk, U.S. Nuclear Regulatory Commission, “Subject: University of Maryland—Updated Physical Security Plan for the License Renewal for the University for Maryland Training Reactor (TAC No. ME 1592) License No. 70; Docket No. 50-166,” November 23, 2015, ADAMS Accession No. ML16022A184.

70. Koeth, Timothy W., University of Maryland, letter to Document Control Desk, U.S. Nuclear Regulatory Commission, “Subject: University of Maryland—Revised Physical Security Plan for License Renewal of the Maryland University Training Reactor (TAC No. ME1592) License No. 70; Docket No. 50-166,” February 10, 2016, ADAMS Accession No. ML16070A009.

71. Matthews, David B., U.S. Nuclear Regulatory Commission, letter to Vince Adams, University of Maryland, “Confirmatory Action Letter—University of Maryland Training Research Reactor——Site-Specific Compensatory Measures Implementation Plan,” March 2, 2004, ADAMS Accession No. ML033090502.

72. Floyd, Jason E., University of Maryland, letter to Document Control Desk, U.S. Nuclear Regulatory Commission, transmits an updated emergency plan for Maryland University University Training Reactor, Janurary 5, 2000, ADAMS Accession No. ML16264A064.

73. Lising, Jason, U.S. Nuclear Regulatory Commission, letter to Timothy Koeth, University of Maryland, “University of Maryland—Request for Additional Information Re: Review of the Emergency Plan for the License Renewal for the University of Maryland Training Reactor (TAC No. ME1592),” March 11, 2014, ADAMS Accession No. ML14064A369.

74. Al-Sheikhly, Mohamad, University of Maryland, letter to Document Control Desk, U.S. Nuclear Regulatory Commission, “Reference: Reply to a Notice of Violation, University of Maryland— NRC Routine Inspection Report No. 50-166/2010 and Notice of Violation,” enclosing “Requalifiation/Training Program for the Maryland University Training Reactor,” August 26, 2010, ADAMS Accession No. ML102440118.

75. Adams, Alexander, U.S. Nuclear Regulatory Commission, letter to Mohamad Al-Sheikhly, University of Maryland, “University of Maryland—Request for Additional Information, Re: Reactor Operator Requalification Program (TAC No. ME2431),” February 15, 2012, ADAMS Accession No. ML102660113.

76. Adams, Alexander, U.S. Nuclear Regulatory Commission, letter to Mohamad Al-Sheikhly, University of Maryland, “University of Maryland—Request for Additional Information, Re: Reactor Operator Requalification Program (TAC No. ME2431), July 16, 2012, ADAMS Accession No. ML121870709.

77. Adams, Alexander, U.S. Nuclear Regulatory Commission, letter to Mohamad Al-Sheikhly, University of Maryland, “University of Maryland—Review and Approval of the Requalification Training Program for Licensed Operators (TAC No. ME1592),” November 15, 2012, ADAMS Accession No. ML12306A112.

78. Koeth, Timothy W., University of Maryland, letter to Document Control Desk, U.S. Nuclear Regulatory Commission, “Subject: University of Maryland - Request for Additional Information Re: for the Renewal of Facility Operating License No. R-70 the Maryland University Training Reactor Docket No. 50-166,” November 2, 2016, ADAMS Accession No. ML16309A184.

79. Al-Sheikhly, Mohamad, University of Maryland, letter to Document Control Desk, U.S. Nuclear Regulatory Commission, “Subject: Annual Report,” submittal of annual operating report for the University of Maryland Training Reactor for July 1, 1998, to June 30, 1999, September 13, 1999, ADAMS Accession No. ML16118A330.

80. Sturtz, Charles, University of Maryland, letter to Document Control Desk, U.S. Nuclear Regulatory Commission, “Docket No. 50-166, University of Maryland, Application for Renewal of Operating License No. R-70, Letter of Intent regarding the Financial Qualifications,” April 27, 2000, ADAMS Accession No. ML003717952.

81. Adams, Alexander, U.S. Nuclear Regulatory Commission, letter to Dr. Mohamad Al-Sheikhly, University of Maryland, “University of Maryland - Request for Additional Information Re: License Renewal (TAC No. MB1788),” October 10, 2002, ADAMS Accession No. ML022690533.

82. Traiforos, Spyros A., U.S. Nuclear Regulatory Commission, letter to Mohamad Al-Sheikhly, University of Maryland, “University of Maryland - Request for Additional Information Regarding the License Renewal for the Maryland University Training and Research Reactor (TAC No. ME1592),” December 10, 2009, ADAMS Accession No. ML093420068.

83. Traiforos, Spyros A., U.S. Nuclear Regulatory Commission, letter to Dr. Mohamad Al-Sheikhly, University of Maryland, “University of Maryland - Request for Additional Information Regarding the License Renewal for the Maryland University Training Reactor (TAC No. ME1592)” April 6, 2010, ADAMS Accession No. ML100840239.

84. McGinty, Timothy J., U.S. Nuclear Regulatory Commission, letter to Dr. Mohamad Al-Sheikhly, University of Maryland, “University of Maryland – Delays In The Review of License Renewal Application of The University of Maryland Training Reactor,” April 21, 2010, ADAMS Accession No. ML100890048.

85. Adams, Alexander, U.S. Nuclear Regulatory Commission, letter to Dr. Mohamad Al-Sheikhly, “University of Maryland - Request for Additional Information Regarding the License Renewal for The Maryland University Training Reactor (TAC No. ME1592),” August 20, 2010, ADAMS Accession No. ML102230338.

86. Traiforos, Spyros A., U.S. Nuclear Regulatory Commission, e-mail to Dr. Mohamad Al-Sheikhly, University of Maryland, “NRR comments to the University of Maryland (UMD) RAI responses dated 1/31/2011,” February 17, 2011, ADAMS Accession No. ML110940142.

87. Adams, Alexander, U.S. Nuclear Regulatory Commission, letter to Dr. Mohamad Al-Sheikhly, University of Maryland, “University Of Maryland – Response to Requests for Additional Information dated May 2, 2011 (TAC No. ME1592),” June 22, 2011, ADAMS Accession No. ML11171A566.

88. Kennedy, William B., U.S. Nuclear Regulatory Commission, letter to Dr. Mohamad Al-Sheikhly, University of Maryland, “University of Maryland, Request for Additional Information Regarding the License Renewal for the Maryland University Training Reactor (TAC No. ME1592),” August 26, 2011, ADAMS Accession No. ML112130086.

89. Kennedy, William B., U.S. Nuclear Regulatory Commission, letter to Dr. Mohamad Al-Sheikhly, University of Maryland, “University of Maryland, Request for Additional Information Regarding the License Renewal for the Maryland University Training Reactor (TAC No. ME1592),” September 8, 2011, ADAMS Accession No. ML112380621.

90. Lising, Jason A., Nuclear Regulatory Commission, letter to Dr. Timothy W. Koeth, University of Maryland, “University of Maryland – Request for Additional Information Re: Financial Update for License Renewal for the Maryland University Training Reactor (TAC No. ME1592),” June 2, 2014, ADAMS Accession No. ML14141A630.

91. Wertz, Geoffrey A., U.S. Nuclear Regulatory Commission, letter to Dr. Timothy W. Koeth, University of Maryland, “University of Maryland - Request for Additional Information Re: Review of The Argon-41 Radiological Dose Assessment for License Renewal of The Maryland University Training Reactor (TAC No. ME1592),” September 25, 2014, ADAMS Accession No. ML14266A658.

92. Allen, Eben., U.S. Nuclear Regulatory Commission, letter to Dr. Timothy W. Koeth, University of Maryland, “University Of Maryland - Request for Additional Information Regarding the Review of License Renewal for the Maryland University Training Reactor (TAC No. ME1592),” July 28, 2016, ADAMS Accession No. ML16144A537.

93. Koeth, Timothy W., University of Maryland, letter to Document Control Desk, U.S. Nuclear Regulatory Commission, “RE: SNM Limit, Docket No. 50-166, License No. R-70, University of Maryland,” November 1, 2016, ADAMS Accession No. ML16312A066.

94. Allen, Eben., U.S. Nuclear Regulatory Commission, letter to Dr. Timothy W. Koeth, University of Maryland, “University of Maryland - Request for Additional Information Regarding the Review of License Renewal for the Maryland University Training Reactor (TAC No. ME1592),” November 9, 2016, ADAMS Accession No. ML16309A512.

95. Koeth, Timothy W., University of Maryland, letter to Document Control Desk, U.S. Nuclear Regulatory Commission, “Subject: University of Maryland - Request for Additional Information Re: for the Renewal of Facility Operating License No. R-70 the Maryland University Training Reactor Docket No. 50-166, Me1592,” November 10, 2016, ADAMS Accession No. ML16320A007.

96. Koeth, Timothy W., University of Maryland, letter to Document Control Desk, U.S. Nuclear Regulatory Commission, “Subject: University of Maryland - Request for Additional Information Re: for the Renewal of Facility Operating License No. R-70 the Maryland University Training Reactor Docket No. 50-166,” November 17, 2016, ADAMS Accession No. ML16323A447.

97. Koeth, Timothy W., University of Maryland, letter to Document Control Desk, U.S. Nuclear Regulatory Commission, “Subject: University of Maryland - Request for Additional Information Regarding the Review of License Renewal For the Maryland University Training Reactor (Tac No. Me1592),” November 17, 2016, ADAMS Accession No. ML16323A446.

98. Federal Guidance Report No. 11, “Limiting Values of Radionuclide Intake and Air Concentration and Dose Conversion Factors for Inhaltion, Submersion, and Ingestion,” 1988.

99. Federal Guidance Report No. 12, “External Exposure to Radionuclides in Air, Water, and Soil,” 1993.

100. Allen, Eben . Nuclear Regulatory Commission, Conversation Record with Dr. Timothy W. Koeth, University of Maryland, “Changes to the technical specifications in support of license renewal,” December 2, 2016, ADAMS Accession No. ML16337A343.

101. Koeth, Timothy W., University of Maryland, e-mail to Eben Allen, U.S. Nuclear Regulatory Commission, “Re: Conversation of Record Support of MUTR License Renewal,” December 2, 2016, ADAMS Accession No. ML16337A389.