QUESTION 76 Rev 2

In accordance with Tech Spec bases section 3.8.1, AC Sources – Operating, which one of the following completes the statements below?

When the A 4kv Shutdown board normal feeder breaker trips the A Diesel Generator is required to energize the A 4KV Shutdown board within __ (1) __ seconds.

When the A 4KV Shutdown board has been transferred to the **Alternate** feeder breaker, the SRO __ (2) __ take credit for offsite power to the A 4KV shutdown board.

A. (1) 5
   (2) Can

B. (1) 5
   (2) Cannot

C. (1) 10
   (2) Can

D. (1) 10
   (2) Cannot

Answer: D

Examination Outline Cross-Reference	Level:	RO	SRO
	Tier #		1
	Group #		1
	K/A#	295003 G 2.1.28	
	Importance Rating		4.1

Partial or Complete Loss of A.C. Power; Knowledge of the purpose and function of major system components and controls. (CFR: 41.7)

Justification for K/A match: K/A 295003 is in the abnormal section of the K/A catalog and concerns a loss of AC power. K/A G2.1.28 is a generic K/A that requires knowledge of the purpose and function of major system components. This question satisfies the partial loss of AC power and requires knowledge of the Diesel Generators purpose and the function of the alternate feeder breaker satisfying the generic K/A.

Explanation: CORRECT D: IAW Tech Spec Bases 3.8.1 the D/G is required to power the Shutdown board within 10 seconds and credit cannot be taken for a 4KV Shutdown board on alternate power due to CAS logic trip of the alternate breaker.

A. **Incorrect because** – Tech Spec allows 10 seconds for the D/G to start and tie to the Shutdown board and The SRO cannot take credit for offsite power to a 4KV shutdown board on alternate.
Plausible because - OPL171.038 indicates that for a loss of power the D/G could tie to the shutdown board after a 1.5 second timer and a 3.5 second timer for a total of 5 seconds. Part 2 see A above.

B. **Incorrect because** – Tech Spec allows 10 seconds for the D/G to start and tie to the Shutdown board.
Plausible because - OPL171.038 indicates that for a loss of power the D/G could tie to the shutdown board after a 1.5 second timer and a 3.5 second timer for a total of 5 seconds. Part 2 is correct.

C. **Incorrect because** – The SRO cannot take credit for offsite power to a 4KV shutdown board on alternate.
Plausible because part 1 is correct and the alternate supply to the 4KV Shutdown board is feed from a Shutdown bus just like the normal breaker.

Technical Reference(s): Tech Spec Bases section B3.8.1 Rev 52

Proposed references to be provided to applicants during examination: None

Learning Objective (As available): OPL171.038 OBJ 5

Question Source:	Bank: Modified Bank: New: X
Question History:	Previous NRC: None
Question Cognitive Level:	Memory or Fundamental Knowledge X Comprehension or Analysis
10 CFR Part 55 Content:	43(b)(2)

BASES

LCO

Each DG must be capable of starting, accelerating to rated speed and voltage, and connecting to its respective 4.16 kV shutdown board on detection of bus undervoltage. This sequence must be accomplished within 10 seconds.

BACKGROUND

Each of four 4.16 kV shutdown boards has two offsite power circuits available and a single DG. Only offsite power delivered through the normal feeder breakers can be credited since common accident signal (CAS) logic (CAS A/CAS B) will trip the alternate breaker. This prevents an overload condition if all shutdown boards had been aligned to the same shutdown bus, and thus to the same transformer winding.

OPL171.038, DIESEL GENERATORS AND STANDBY AUXILAIRY POWER SYSTEM, Rev. 20

5) Undervoltage

a) If shutdown board voltage drops to 0 volts for 1.5 seconds, then the associated diesel generator starts.

b) After another 3.5 seconds, if voltage is still low 4kV board load shedding takes place (Now 5 seconds total time)

(1) Trips all board feeders
(2) Trips all loads except transformer feeds
(3) Trips shutdown board “43” switch to MANUAL

c) The diesel generator output breaker then shuts if:

(1) DG up to speed (above 870 rpm)
(2) All shutdown board feeders open
(3) No lockout on shutdown board
(4) No lockout on diesel generator
(5) No lockout on normal or alternate feeder breakers
(6) Under voltage on board

QUESTION 77 Rev 0

Unit 3 is operating at 100% power.

- CSST A is tagged on a SWLD Hold Order.
- Start bus 1A and 2A have been transferred to **alternate**.

Subsequently:

The Main Turbine trips due to Main Xfmr/USST Differential (386TX) relay operation.

Which one of the following completes the statement below in accordance with Tech Spec section 3.8.1, AC Sources-Operating?

_____ is/are required to be entered.

A. No Conditions

B. Condition A ONLY

C. Condition E ONLY

D. Condition A and E

Answer: B

Examination Outline Cross-Reference	Level:	RO	SRO
	Tier #		1
	Group #		1
	K/A#	295005 AA2.08	
	Importance Rating	3.1	3.1

Main Turbine Trip; Ability to determine and/or interpret the following as they apply to Main Turbine Gen Trip: (CFR: 43.5) Electrical distribution status

Justification for K/A match: This is a Tier 1 Abnormal/Emergency SRO Only Question on Main Turbine Trip and the ability to interpret electrical distribution status. The question sets up an abnormal condition then interjects a turbine trip and asks the SRO to determine the Tech Spec required to be executed, base on his knowledge of the bases for this particular specification and the status of the electrical buses.

Explanation: Correct B: There are three basic Unit 3 circuits from the transmission network to the safety related Division I and II 4kV Shutdown Boards. With CSST A tagged one offsite circuit is not available. The Main Xfmr/USST Differential relay operation results in a lock out of the 4KV unit board normal feeder breakers taking away another offsite circuit. One offsite circuit remains available through CSST B to the 4KV shutdown boards. Tech Spec 3.8.1 condition A one required Off-site circuit INOP would be entered.

A. **Incorrect because** – The conditions given result in a loss of offsite power from the 500KV system and CSST A was already tagged. Only 1 required offsite source available. **Plausible** because one offsite circuit is operable through CSST B and most Main Turbine trips result in the 4KV Unit boards being feed via the USSTs with no interruption in power. In addition this is plausible if the candidate thinks the applicability is Mode 1 and 2 only.

C. **Incorrect because** – Two required offsite sources are not INOP.
Plausible because 2 offsite circuits are INOP.

D. **Incorrect because** – Condition E is not required to be entered.
Plausible because Condition A is required to be entered and 2 offsite circuits are INOP.

Technical Reference(s): 3-OI-47 Rev 108, U3 Tech Spec amendment 244, 0-45E1506 Rev 58

Proposed references to be provided to applicants during examination: **TS section 3.8.1.A and E**

Learning Objective (As available): OPL 171.036 R 15 OBJ 13

Question Source:	Bank: Modified Bank: New: X
Question History:	Previous NRC: None
Question Cognitive Level:	Memory or Fundamental Knowledge Comprehension or Analysis X
10 CFR Part 55 Content:	43(b)(2)

B 3.8 ELECTRICAL POWER SYSTEMS
B 3.8.1 AC Sources – Operating
BACKGROUND

An offsite circuit consists of all breakers, transformers, switches, interrupting devices, cabling, and controls required to transmit power from the offsite transmission network to the 3EA and 3EB (Division I) or 3EC and 3ED (Division II) 4.16 kV shutdown boards. Offsite power is supplied to the 161 kV and 500 kV switchyards from the transmission network. Three basic circuits from the transmission network to the safety related Division I (3EA and 3EB 4.16 kV shutdown boards) and Division II (3EC and 3ED 4.16 kV shutdown boards), are as follows:

1. From the 500 kV switchyard, through unit station service transformer (USST) 3B to 4.16 kV unit board 3A and/or 3B. Each unit board feeds two of the Unit 3 4.16 kV shutdown boards (3EA and 3EB or 3EC and 3ED)

2. From the 161 kV transmission network, through common station service transformer (CSST) A to start bus 1A or 1B, then to a 4.16 kV unit board. That unit board feeds two of the Unit 3 4.16 kV shutdown boards (3EA and 3EB or 3EC and 3ED)

3. From the 161 kV transmission network, through CSST B to start bus 1A or 1B, and then to a 4.16 kV unit board. That unit board feeds two of the Unit 3 4.16 kV shutdown boards (3EA and 3EB or 3EC and 3ED)

LCO

Two qualified circuits between the offsite transmission network and the onsite Class 1E Distribution System, four separate and independent Unit 3 DGs (3A, 3B, 3C, and 3D), and the Unit 1 and 2 DG(s) needed to support required Standby Gas Treatment (SGT) trains and Control Room Emergency Ventilation System (CREVS) trains are required to be OPERABLE.

APPLICABILITY

The AC sources are required to be OPERABLE with Unit 3 in MODES 1, 2, and 3

The AC power requirements for Unit 3 in MODES 4 and 5 are covered in LCO 3.8.2, "AC Sources - Shutdown."

Illustration 4
(Page 1 of 6)

Turbine Trip Logic

The following is a list of main turbine trips:
A. Generator trips **REFER TO** page 3 of this illustration for various generator trips

Illustration 4
(Page 3 of 6)

Turbine Trip Logic

The following table lists conditions that will trip the generator. A turbine trip will result from these generator trips.

MAIN GENERATOR TRIPS		
FUNCTION	**INSTRUMENT**	**LOCATION**
Generator Differential	387G (1)	Relay Rm. RB 33
Main Xfmr/USST Differential	386TX	Relay Rm. RB 34

0-45E1506 R058

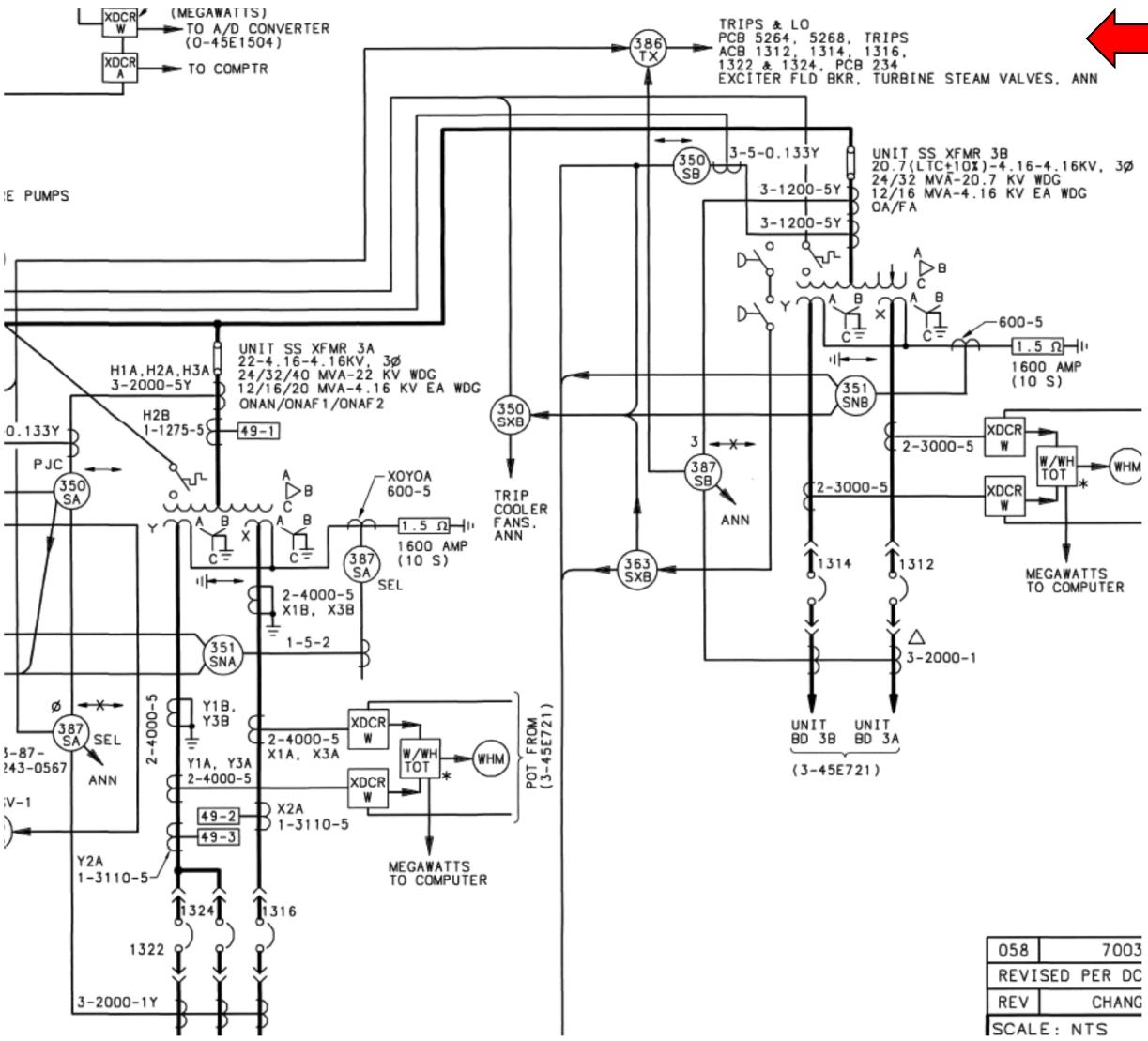

058	7003
REVISED PER DC	
REV	CHANG
SCALE: NTS	

3.8 ELECTRICAL POWER SYSTEMS

3.8.1 AC Sources - Operating

LCO 3.8.1 The following AC electrical power sources shall be OPERABLE:

a. Two qualified circuits between the offsite transmission network and the onsite Class 1E AC Electrical Power Distribution System;

b. Unit 3 diesel generators (DGs) with two divisions of 480 V load shed logic and common accident signal logic OPERABLE; and

c. Unit 1 and 2 DG(s) capable of supplying the Unit 1 and 2 4.16 kV shutdown board(s) required by LCO 3.8.7, "Distribution Systems - Operating."

APPLICABILITY: MODES 1, 2, and 3.

ACTIONS

----------NOTE----------
LCO 3.0.4.b is not applicable to DGs.

CONDITION	REQUIRED ACTION	COMPLETION TIME
A. One required offsite circuit inoperable.	A.1 Verify power availability from the remaining OPERABLE offsite transmission network. AND	1 hour AND Once per 8 hours thereafter (continued)

ACTIONS

CONDITION	REQUIRED ACTION		COMPLETION TIME
A. (continued)	A.2	Declare required feature(s) with no offsite power available inoperable when the redundant required feature(s) are inoperable.	24 hours from discovery of no offsite power to one shutdown board concurrent with inoperability of redundant required feature(s)
	AND		
	A.3	Restore required offsite circuit to OPERABLE status.	7 days AND 21 days from discovery of failure to meet LCO
E. Two required offsite circuits inoperable.	E.1	Declare required feature(s) inoperable when the redundant required feature(s) are inoperable.	12 hours from discovery of Condition E concurrent with inoperability of redundant required feature(s)
	AND		
	E.2	Restore one required offsite circuit to OPERABLE status.	24 hours

QUESTION 78 Rev 2

Unit 1 was operating at 100% Reactor Power when the following series of events occurred:

- 02:05 Unit 1 Control Room Evacuation is initiated due to smoke in the Control Room
- 02:09 the Backup Control Panel, 1-25-32 is manned
- 02:13 the Operator has control of Reactor Pressure
- 02:17 AUO reports HPCI is running
- 02:19 Reactor Water Level is currently (-) 30 inches and rising
- 02:28 RCIC is initiated from Panel 1-25-32

Which ONE of the following completes the statements below?

In accordance with EPIP-1, “Emergency Plan Implementing Procedure”, the HIGHEST Emergency Action Level Classification that is required for these conditions is a (an) __ (1) __.

Drywell temperature and pressure are being controlled by__ (2) __.

[REFERENCE PROVIDED]

A. (1) Alert
(2) containment venting

B. (1) Alert
(2) operation of DW Blowers

C. (1) Site Area Emergency
(2) containment venting

D. (1) Site Area Emergency
(2) operation of DW Blowers

Answer: B

Examination Outline Cross-Reference	Level:	RO	SRO
	Tier #		1
	Group #		1
	K/A#	295016 AA2.05	
	Importance Rating		3.9

Control Room Abandonment; Ability to determine and/or interpret the following as they apply to CONTROL ROOM ABANDOMENT: Drywell pressure

Justification for K/A match: Control Room Abandonment is covered by 1-AOI-100-2; this question places the plant in a condition where the conditions are such that the crew would enter AOI-100-2. There are provisions contained within AOI-100-2 to control Drywell temperature and pressure, and this question asks the student to know the basic controlling mechanism, containment venting or DW Blowers.

Explanation: CORRECT B: Alert is the proper classification based on EPIP-1 EAL 6.2-A Control Room Abandonment from entry into 1-AOI-100-2 with manning of the Backup Control Panel and control of critical parameters within 20 min. 2nd part correct step 4.2[16] directs operation of DW Blowers to control DW temperature and pressure.

A. **Incorrect because** - There are no provisions to vent containment while executing AOI-100-2. The only way to control DW pressure is through the operation of the DW Coolers.
Plausible since containment venting is used in both AOI-64-1 and EOI-2 to control DW Temperature/Pressure.

C. **Incorrect because** – IAW the bases for EAL 6.2-S Level is considered controlled if the parameters can be verified as being maintained within safe value ranges therefore the correct declaration is Alert.
Plausible because the stem of the question does not indicate that the Operator is controlling Reactor Water level however; according to the bases it can be considered controlled if maintained within a safe range by for example HPCI initiation. 2nd part is incorrect and plausible see A above.

D. **Incorrect because** – IAW the bases for EAL 6.2-S Level is considered controlled if the parameters can be verified as being maintained within safe value ranges therefore the correct declaration is Alert. Part 2 is correct.
Plausible because the stem of the question does not indicate that the Operator is controlling Reactor Water level however; according to the bases it can be considered controlled if maintained within a safe range by for example HPCI initiation.

Technical Reference(s): 1-AOI-100-2 rev 21, EPIP-1 rev 50

Proposed references to be provided to applicants during examination: EPIP-1 rev 51

Learning Objective (As available): OPL 171.208 Obj 3, 4

Question Source:	Bank: Modified Bank: X New:
Question History:	Previous NRC: BFN1006 Q#77
Question Cognitive Level:	Memory or Fundamental Knowledge: Comprehension or Analysis: X
10 CFR Part 55 Content:	43(b)(5)

Figure 2: Screening for SRO-only linked to 10 CFR 55.43(b)(5) (Assessment and selection of procedures)

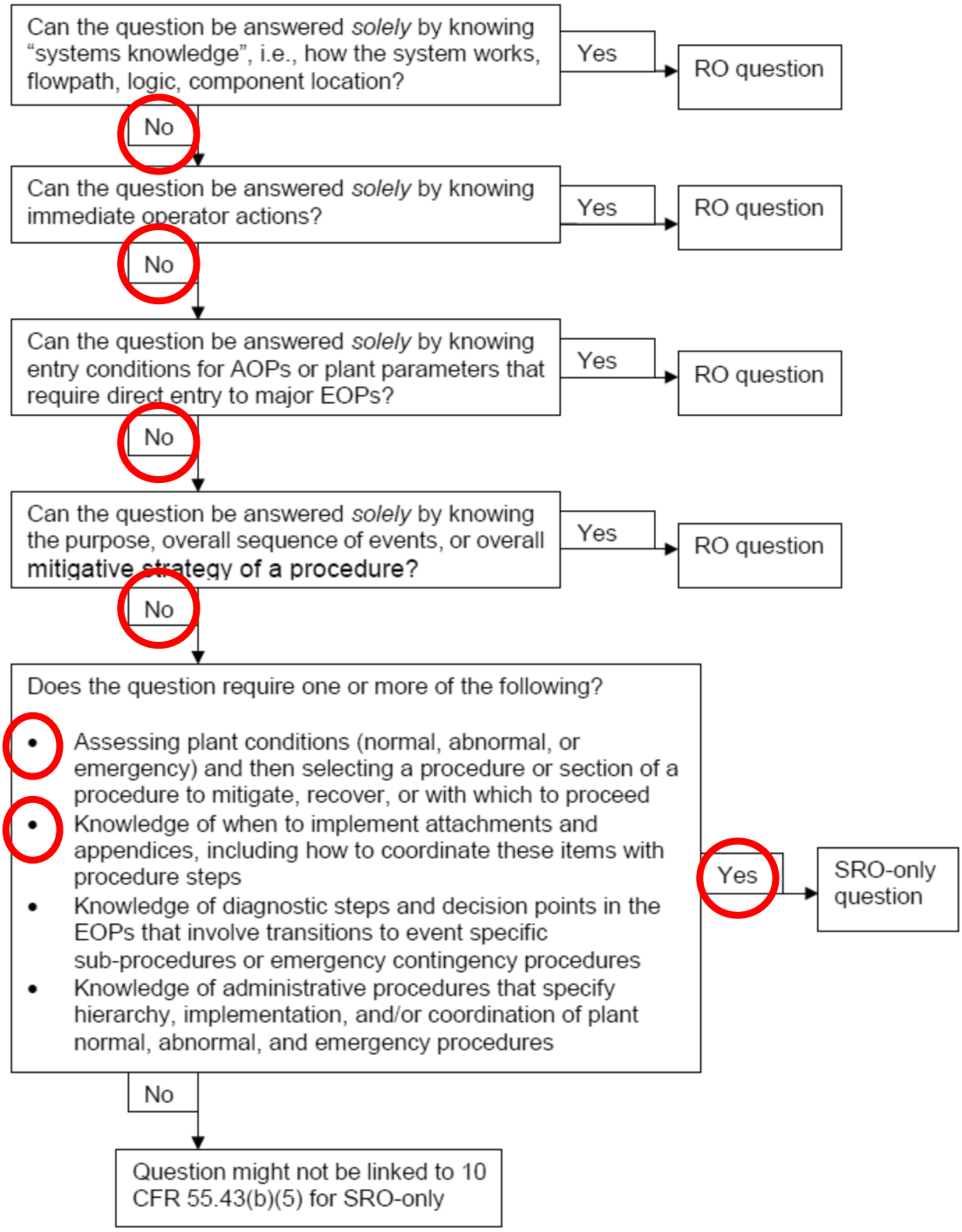

CONTROL ROOM EVACUATION	TURBINE FAILURE	
Description	Description	
	6.3-U Turbine failure resulting in casing penetration **OR** Significant damage to turbine or generator seals during operation. OPERATING CONDITION: Mode 1, or 2	UNUSUAL EVENT
6.2-A Control Room Abandonment from entry into 1, 2, or 3-AOI-100-2 or 0-SSI-16 for ANY Unit Control Room. OPERATING CONDITION: ALL	6.3-A Turbine failure resulting in visible structural damage to or visible penetration of ANY of the following structures from missles: •Reactor Building •Diesel Generator Building •Intake Structure •Control Bay OPERATING CONDITION: Mode 1 or 2	ALERT
6.2-S Control Room Abandonment from entry into 1, 2, or 3-AOI-100-2 or 0-SSI-16 for ANY Unit Control Room **AND** Control of reactor water level, reactor pressure, and reactor power (for Modes 1, or 2, or 3) or decay heat removal (for Modes 4, or 5) per 1, 2, or 3-AOI-100-2 or 0-SSI-16 as applicable, can NOT be established within 20 minutes after evacuation is initiated. OPERATING CONDITION: ALL		SITE EMERGENCY
		GENERAL EMERGENCY

BASIS:

This event classification is intended to recognize loss of control of critical parameters either by failure of equipment designed to automatically initiate for control of the parameter or failure to expeditiously transfer safety system control to the backup controls. Fission product barrier damage may not yet be indicated but should be considered by assessing available parameters versus the status of safety systems and the ability to control critical parameters. In Mode 4 and Mode 5 operator concern should be directed towards maintaining core cooling using decay heat removal systems. In power operation, hot standby, and hot shutdown operator concern is primarily directed toward maintaining critical parameters, (i.e., level, pressure, power, and heat sink) and thereby assuring fission product barrier integrity.

The 20 minute time period is based on time required for personnel to leave the control room, arrive at the appropriate backup control station, and take control of critical parameters before core uncovery or core damage has occurred. This timeframe has been projected within the Tennessee Valley Authority, Browns Ferry Nuclear Plant, Fire Protection Report. During execution of procedures and transfer of equipment control, the listed critical parameters may be considered as being controlled if the parameters can be verified as being maintained within safe value ranges by appropriate equipment and automatic initiation functions designed to control the parameter (example: HPCI auto initiated and raised RPV level to a value above the initiation setpoint.).

4.2 Unit 1 Subsequent Actions (continued)

[15.9.7] **WHEN** RHR SYS II TOTAL FLOW, 1-FI-74-79 is at or below 13,000 gpm, **THEN**

DIRECT operator to stop throttling 1-HS-074-0073C. ☐

[16] **MAINTAIN** Drywell temperature less than 160°F as follows:

[16.1] **MONITOR** DRYWELL AIR TEMPERATURE, 1-TIS-64-52AA at Panel 1-25-32, ☐

[16.2] **OPERATE** Drywell Blowers as required. ☐

Drywell Blower	Switch No.	Compt. No.	Switch Position	
	480V Shutdown Bd 1A			
1A-1	DW CLG UNIT 1A1 BLOWER, 1-HS-070-0037C	2C	CLOSE	☐
1A-2	DW CLG UNIT 1A2 BLOWER, 1-HS-070-0038C	2D	CLOSE	☐
	480V Shutdown Bd 1B			
1B-1	DW CLG UNIT 1B1 BLOWER, 1-HS-070-0042C	2C	CLOSE	☐
1B-2	DW CLG UNIT 1B2 BLOWER, 1-HS-070-0043C	2D	CLOSE	☐
	480V RMOV Bd 1A			
1A-3	DW CLG UNIT 1A3 BLOWER, 1-HS-070-0039C	17A	START	☐
1A-4	DW CLG UNIT 1A4 BLOWER, 1-HS-070-0040C	18A	START	☐
1B-3 1B-4	COOLERS started by AUO in Attachment 4 Part B.			
	480V RMOV Bd 1C			
1A-5	DW CLG UNIT 1A5 BLOWER, 1-HS-070-0041C	1A	START	☐
1B-5	DW CLG UNIT 1B5 BLOWER, 1-HS-070-0046C	11A	START	☐

1.1 Scope

This procedure can **NOT** be properly executed for, and does **NOT** support, shutting down the Reactor during any type of accident.

The provisions of this instruction are adequate and proper for the following EOI entry conditions that may be encountered while executing Control Room abandonment:

- 1-EOI-1 Flow Chart, RPV Control
  Reactor Water Level less than +2.0 inches
  Reactor Pressure High above 1073 psig.
- 1-EOI-2 Flow Chart, Primary Containment Control
  Suppression Pool Temperature above 95°F
  Suppression Pool Level above -1 inch

HLT 0810 Written Exam

77. Unit 2 was operating at 100% Reactor Power when the following series of events occurred:

- At 0200 an **AIR LINE** rupture in the Drywell results in a High Drywell Pressure Scram
- At 0205 Unit 2 Control Room evacuation is initiated due to a fire in the Control Bay
- At 0230 the Backup Control Panel, 2-25-32, is manned

Which ONE of the following completes the statements?

In accordance with EPIP-1, "Emergency Plan Implementing Procedure," the **HIGHEST** emergency action level classification that is required for these conditions is a (an) **__(1)__** .

In implementing 2-AOI-100-2, "Control Room Abandonment," HPCI will cycle, upon demand, between the initiation **AND** high level trip setpoint until **__(2)__**.

[REFERENCE PROVIDED]

A. **(1)** Alert
   (2) it is secured in accordance with the Subsequent Actions

B. **(1)** Alert
   (2) HPCI flow control is established at the Backup Control Panel

C. **(1)** Site Area Emergency
   (2) it is secured in accordance with the Subsequent Actions

D. **(1)** Site Area Emergency
   (2) HPCI flow control is established at the Backup Control Panel

QUESTION 79 Rev 0

Unit 1 is operating at 100% power.

The spare RBCCW pump and heat exchanger are tagged for scheduled work.

Subsequently:

- 1-9-4C window 12, RBCCW PUMP DISCH HDR PRESS LOW, alarms
- A Fire Watch reports a large leak near the RBCCW heat exchangers.
- An AUO reports that the 1A RBCCW pump discharge pressure is 32 psig and 1B RBCCW pump discharge pressure is 34 psig and both are lowering.

NOTE:
1-AOI-70-1, Loss of Reactor Building Closed Cooling Water
1-AOI-100-1, Reactor Scram
1-GOI-100-12, Power Maneuvering

Which of the following completes the statements below?

The US is initially required to enter 1-AOI-70-1, and then __ (1) __.

The US will direct that both Recirc pumps be __ (2) __.

A. (1) 1-GOI-100-12
   (2) Shutdown

B. (1) 1-GOI-100-12
   (2) runback to minimum

C. (1) 1-AOI-100-1
   (2) Shutdown

D. (1) 1-AOI-100-1
   (2) runback to minimum

Answer: C

Examination Outline Cross-Reference	Level:	RO	SRO
	Tier #		1
	Group #		1
	K/A#	295018 AA2.05	
	Importance Rating		2.9

Partial or Complete Loss of Component Cooling Water: Ability to determine and/or interpret the following as they apply to PARTIAL OR COMPLETE LOSS OF COMPONENT COOLING WATER : System pressure

Justification for K/A match: This K/A is in the abnormal section of the catalog. The question asks the candidate to assess indications of pump discharge pressure to determine that a loss of RBCCW is occurring and determine the required actions. The SRO only portion is based on procedure selection.

Explanation: CORRECT C: The conditions given indicate a loss of RBCCW and Drywell cooling. 1-AOI-70-1 states: **IF** Reactor is at power AND Drywell Cooling cannot be immediately restored, THEN PERFORM the following: REDUCE core flow to between 50-60%, MANUALLY SCRAM the Reactor and PLACE Mode Switch in SHUTDOWN. (REFER TO 1-AOI-100-1), SHUT DOWN both Recirc Pumps, and INITIATE a ≤ 90ºF/HR cooldown rate.

A. **Incorrect because** – The conditions given indicate that RBCCW cooling will be lost and for a partial loss AOI-70-1 refers to 1-GOI-100-12A.
Plausible because 1-AOI-70-1 step 4.2[7] directs lowering power **IF** RBCCW loss is a partial loss and Part 2 is correct.

B. **Incorrect because** – Part 1 is incorrect see A above. Part 2 is incorrect because 1-AOI-70-1 directs shutdown of both pumps.
Plausible because lowering power would be correct for a partial loss of RBCCW IAW 1-AOI-70-1 step 4.2[7] [7.3].

D**. Incorrect because** – 1-AOI-70-1 requires shutdown of both pumps.
Plausible see B above and because it is normal for the Recirc pumps to runback following a scram.

Note: Normal RBCCW pump discharge pressure is ~72 psig.

Technical Reference(s): 1-ARP-9-4C rev 23, 1-AOI-70-1 rev 13,

Proposed references to be provided to applicants during examination: None

Learning Objective (As available): OPL 171.007 R25 OBJ 19

Question Source:	Bank: X Modified Bank: New:
Question History:	Previous NRC: None
Question Cognitive Level:	Memory or Fundamental Knowledge Comprehension or Analysis: X
10 CFR Part 55 Content:	43(b)(5)

RBCCW PUMP DISCH HDR PRESS LOW 1-PA-70-15	12

(Page 1 of 1)

Sensor/Trip Point:

1-PS-70-15	50 psig (57 psig on local pump discharge pressure gauge)

Sensor Location: 1-LPNL-925-0008
Elevation 593
Column R-2 R-Line

Probable Cause:
A. Failed pump.
B. Broken coupling.

Automatic Action: Closes RBCCW SECTIONALIZING VLV, 1-FCV-70-48.

Operator Action:
A. **VERIFY** RBCCW SECTIONALIZING VLV, 1-FCV-70-48 closed. ☐
B. **VERIFY** RBCCW pumps A and B in service. ☐
C. **VERIFY** RBCCW Surge Tank Level Low alarm is RESET. ☐
D. **DISPATCH** personnel to check:
- RBCCW surge tank level locally. ☐
- RBCCW pumps for proper operation. ☐

E. **REFER TO** 1-AOI-70-1 for RBCCW System failure and 1-OI-70 for starting spare pump. ☐

References: 1-45E779-6 1-47E610-70-1
FSAR Sections 10.6.4 and 13.6.2

3.0 PRECAUTIONS AND LIMITATIONS

D. On low RBCCW pump discharge header pressure (57 psig), nonessential equipment isolation valve 1-FCV-070-0048 automatically closes and must be reopened manually using 1-HS-70-48.

6.0 SYSTEM OPERATIONS

6.1 Normal Operation

[2] **MAINTAIN** system parameters as follows:

B. RBCCW pump differential pressure between 51 and 56 psid in accordance with Section 6.6.

4.2 Subsequent Actions (continued)

[1] **IF** Reactor is at power **AND** Drywell Cooling cannot be immediately restored, **THEN PERFORM** the following (otherwise N/A):

[1.1] **IF** core flow is above 60%, **THEN REDUCE** core flow to between 50-60%.
[1.2] **MANUALLY SCRAM** the Reactor and **PLACE** Mode Switch in SHUTDOWN. (**REFER TO** 1-AOI-100-1)
[1.3] **SHUT DOWN** both Recirc Pumps as follows:
- **DEPRESS** RECIRC DRIVE 1A SHUTDOWN, 1-HS-96-19
- **DEPRESS** RECIRC DRIVE 1B SHUTDOWN, 1-HS-96-20

[1.4] **INITIATE** a 90°F/HR cooldown rate and **REFER TO** 1-AOI-100-1.

4.2 Subsequent Actions (continued)

[7] **IF** RBCCW loss is partial, **THEN PERFORM** the following to control or reduce Drywell and Recirc Pump temperatures in accordance with 1-GOI-100-12A: (otherwise N/A)

[7.1] **REDUCE** Recirculation flow as necessary until 50-60% core flow is reached.
[7.2] **INSERT** control rods per 1-SR-3.1.3.5(a) as directed by Reactor Engineer until below 66.7% rod line.
[7.3] **REDUCE** Recirculation flow as necessary until minimum core flow is reached.
[7.4] **INSERT** control rods per 1-SR-3.1.3.5(a) as directed by Reactor Engineer.

QUESTION 80 Rev 3

All three Units are operating at 100% Rx Power.
The “G” Control Air Compressor is tagged for scheduled work.

The following are received in the Unit 1 Main Control Room:

- AIR COMPRESSOR ABNORMAL 1-9-20B window 29
- SERVICE AIR XTIE VLV OPEN 1-9-20B window 30
- CONTROL AIR DRYER DISCH PRESSURE LOW 1-9-20B window 32

The Turbine Building AUO reports that a fork lift has ruptured one of the Control Air Receivers.

Assume no Operator actions are taken.

Note: 0-AOI-32-1, Loss of Control and Service Air Compressors
1-ARP-9-5B window 28 SCRAM PILOT AIR HEADER PRESS LOW

Which one of the following completes the statement below?

The Reactor is required to be scrammed when control air pressure first lowers below __ (1) __ in accordance with __ (2) __.

A. (1) 66 psig
(2) 1-ARP-9-5B window 28

B. (1) 66 psig
(2) 0-AOI-32-1

C. (1) 55 psig
(2) 1-ARP-9-5B window 28

D. (1) 55 psig
(2) 0-AOI-32-1

Answer: D

Examination Outline Cross-Reference	Level:	RO	SRO
	Tier #		1
	Group #		1
	K/A#	295019 AA2.01	
	Importance Rating	3.5	3.6

295019 Partial or Complete Loss of Instrument Air: AA2.01 Ability to determine and/or interpret the following as they apply to PARTIAL OR COMPLETE LOSS OF INSTRUMENT AIR : Instrument air system pressure (CFR: 41.10 / 43.5 / 45.13)

Justification for K/A match: This Tier 1 Abnormal/Emergency K/A. The question asks the candidate to access the alarms and report from the AUO in order to interpret the loss of control air and to select the appropriate AOI that will direct the required actions.

Explanation: CORRECT D: All 3 Unit Supervisors will enter 0-AOI-32-1, Loss of Control and Service Air Compressors and their units 1 (2) (3)-AOI-32-2, Loss of Control Air. 0-AOI-32-1 directs each Unit to manually SCRAM the reactor based on their Control Air Header pressure <55 psig. 1-ARP-9-5B window 28 does not direct a Reactor SCRAM.

A. **Incorrect because** a SCRAM is not directed until < 55 psig and 1-ARP-9-5B window 28 does not direct a Reactor SCRAM
Plausible because 66 psig is the Scram Pilot Air Headed low pressure setpoint and because other ARPs do direct manually scramming the Reactor.

B. **Incorrect because** a SCRAM is not directed until < 55psig.
Plausible because 66 psig is the Scram Pilot air header pressure low alarm setpoint and because Part 2 is correct.

C. **Incorrect because** 1-ARP-9-5B window 28 does not direct a Reactor SCRAM.
Plausible because 1-ARP-9-5B window 28 is the ARP for the Scram Pilot air header pressure low alarm and other ARPs do direct manually scramming the Reactor.

NOTE: 1-ARP-9-5A W18, 1-9-5B W 18, 1-9-4A W 2,8,9,15,22 and 1-9-4C W5 all direct Manually Scramming the Reactor.

Technical Reference(s): 0-AOI-32-1 Rev 45, 1-ARP-9-5B Rev 19

Proposed references to be provided to applicants during examination: None

Learning Objective (As available): OPL 171.074 obj V.B.2

Question Source:	Bank: Modified Bank: New: X
Question History:	Previous NRC: None
Question Cognitive Level:	Memory or Fundamental Knowledge Comprehension or Analysis: X
10 CFR Part 55 Content:	43(b)(5)

4.0 OPERATOR ACTIONS

4.1 Immediate Actions

None

NOTE

If necessary, place keeping marks may be made directly in the Control Room copy of this instruction. Management Services should be contacted for a replacement copy when time permits.

4.2 Subsequent Actions

[1] **VERIFY** automatic actions. ☐

[2] **PERFORM** automatic actions that failed to occur. (Otherwise N/A) ☐

[3] **IF** ANY EOI entry condition is met, **THEN**

ENTER the appropriate EOI(s) (otherwise N/A). ☐

[4] **IF** CONTROL AIR PRESSURE is continuing to lower as indicated by 1-PI-32-20 on Panel 1-9-20 or 2(3)-PI-32-88 on Panel 2(3)-9-20, **AND** CONTROL AIR PRESSURE lowers below 55 psig, **THEN** (Otherwise N/A)

MANUALLY SCRAM the reactor. Refer to 1(2)(3)-AOI-100-1 and 1(2)(3)-AOI-32-2. ☐

SCRAM PILOT AIR HEADER PRESS LOW 1-PA-85-38B	28

(Page 1 of 1)

Sensor/Trip Point:

1-PS-085-0038 66.0 psig

Sensor Location:
1-LPNL-925-0018
Elev. 565
Rx. Bldg.
Column R5, N line

Probable Cause:
A. SI (or SR) in progress.
B. Failure of scram pilot header pressure regulators 1-PCV-085-0066 or 1-PCV-085-0067.
C. Control air system failure.
D. Sensor malfunction.

Automatic Action:
None

Operator Action:
A. **CHECK** 1-PI-32-20 on Panel 1-9-20 for control air pressure. ☐
B. **IF** low **THEN**, **REFER TO** 0-AOI-32-1 ☐
C. On Panel 1-9-20, **CHECK OPEN** 1-FCV-32-91. ☐
D. **DISPATCH** personnel to check local pressure indicator, CRD SCRAM VALVE PILOT AIR HDR PRESS, 1-PI-085-0038 on 1-LPNL-925-0018, elevation 565', Rx building. ☐
E. Behind 1-LPNL-925-0018, RX. BLDG. EL. 565', **CHECK** CRD CA FILTER INLET, 1-PI-085-0066A (-0067A) and CRD CA FILTER OUTLET, 1-PI-085-0066B (-0067B). ☐
F. **IF** DP across CRD CA FILTER to 1-PCV-085-0067 is high, **THEN**
   1. **VERIFY** OPEN 1-SHV-085-0244, HDR X-TIE TO 1-FSV-085-0035A&B ☐
   2. **CLOSE** the following valves:
      - 1-SHV-085-0243, HDR ISOL TO 1-FSV-085-0035A&B ☐
      - 1-SHV-085-0262, HEADER SHUTOFF VLV. ☐
   3. **BLOW DOWN** filter by opening and then releasing petcock on filter. ☐
   4. **OPEN** the following valves:
      - 1-SHV-085-0243, HDR ISOL TO 1-FSV-085-0035A&B, ☐
      - 1-SHV-085-0262, HEADER SHUTOFF VLV, ☐

PA-85-38B SCRAM PILOT AIR HEADER PRESS LOW Window 28
(Page 2 of 2)

Operator Action: (Continued)

G. **IF** DP across CRD CA FILTER to 1-PCV-085-0066 is high, **THEN**
   1. **VERIFY OPEN** 1-SHV-085-0243, HDR ISOL TO 1-FSV-085-0035A&B ☐
   2. **CLOSE** the following valves:
      - 1-SHV-085-0263, HEADER SHUTOFF VLV ☐
      - 1-SHV-085-0244,HDR X-TIE TO 1-FSV-085-0035A&B. ☐
   3. **BLOW DOWN** filter by opening and then releasing petcock on filter. ☐
   4. **OPEN** the following valves:
      - 1-SHV-085-0263, HEADER SHUTOFF VLV ☐
      - 1-SHV-085-0244, HDR X-TIE TO 1-FSV-085-0035A&B. ☐

H. **IF** pressure does NOT recover to greater than 70 psig, **THEN** **REPLACE** air header supply filter with a Wilkerson 5 micron filter element, Accessory No. FRP-95-172. [IE Bulletin 79-01B] ☐

I. **IF** pressure regulator has failed, **THEN** **REQUEST** that Instrument Department verify spare regulator operation. ☐

References: Technical Specifications

1-45E620-6-2 1-47E610-85-1 GE 1-730E915-17

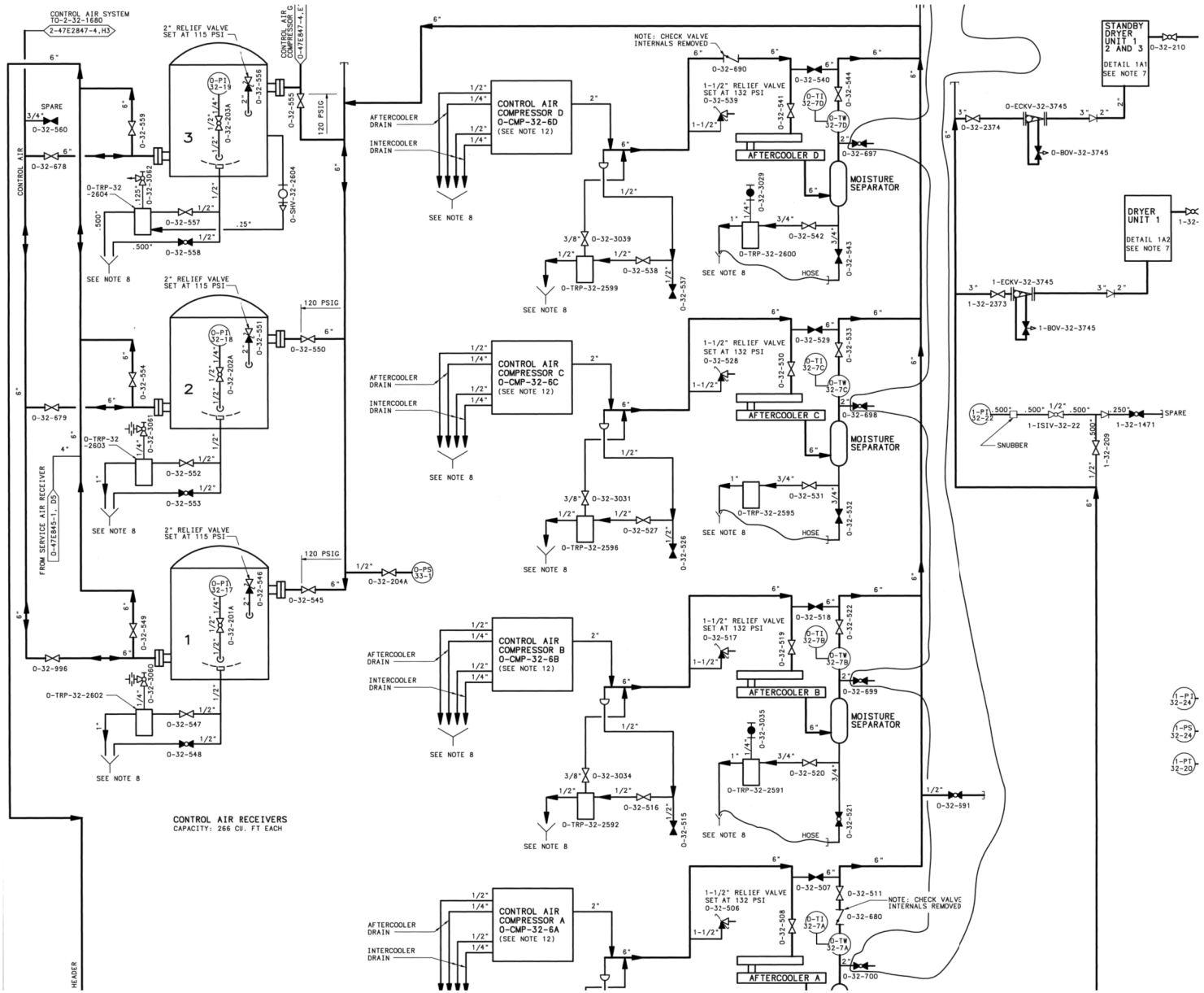
CONTROL AIR SYSTEM TO-2-32-1680
2-47E2847-4,H3
CONTROL AIR
SPARE
0-32-560
0-32-678
0-32-679
0-32-996
FROM SERVICE AIR RECEIVER
0-47E845-1, D5
HEADER
2" RELIEF VALVE SET AT 115 PSI
CONTROL AIR COMPRESSOR G
0-47E847-4,E
120 PSIG
0-32-555
0-32-556
0-32-550
0-32-551
0-32-545
0-32-546
0-SHV-32-2604
0-PT 32-19
0-PT 32-18
0-PT 32-17
0-32-203A
0-32-202A
0-32-201A
0-32-204A
0-PS 33-1
0-TRP-32-2604
0-TRP-32-2603
0-TRP-32-2602
0-32-3082
0-32-3083
0-32-3080
0-32-557
0-32-558
0-32-552
0-32-553
0-32-547
0-32-548
SEE NOTE 8
CONTROL AIR RECEIVERS
CAPACITY: 266 CU. FT EACH
AFTERCOOLER DRAIN
INTERCOOLER DRAIN
CONTROL AIR COMPRESSOR D O-CMP-32-6D (SEE NOTE 12)
CONTROL AIR COMPRESSOR C O-CMP-32-6C (SEE NOTE 12)
CONTROL AIR COMPRESSOR B O-CMP-32-6B (SEE NOTE 12)
CONTROL AIR COMPRESSOR A O-CMP-32-6A (SEE NOTE 12)
NOTE: CHECK VALVE INTERNALS REMOVED
0-32-690
0-32-540
0-32-544
0-32-541
0-32-539
1-1/2" RELIEF VALVE SET AT 132 PSI
0-T1 32-7D
0-T1 32-7C
0-T1 32-7B
0-T1 32-7A
0-32-697
0-32-698
0-32-699
0-32-700
AFTERCOOLER D
AFTERCOOLER C
AFTERCOOLER B
AFTERCOOLER A
MOISTURE SEPARATOR
0-32-3029
0-32-3035
0-TRP-32-2600
0-TRP-32-2599
0-TRP-32-2595
0-TRP-32-2596
0-TRP-32-2591
0-TRP-32-2592
0-32-542
0-32-543
0-32-538
0-32-537
0-32-529
0-32-533
0-32-530
0-32-528
0-32-531
0-32-532
0-32-527
0-32-526
0-32-518
0-32-522
0-32-519
0-32-517
0-32-520
0-32-521
0-32-516
0-32-515
0-32-591
0-32-507
0-32-511
0-32-680
0-32-508
0-32-506
HOSE
STANDBY DRYER UNIT 1 2 AND 3
DETAIL 1A1
SEE NOTE 7
0-32-210
0-ECKV-32-3745
0-32-2374
0-BOV-32-3745
DRYER UNIT 1
DETAIL 1A2
SEE NOTE 7
1-ECKV-32-3745
1-32-2373
1-BOV-32-3745
1-PT 32-22
1-ISIV-32-22
SNUBBER
SPARE
1-32-1471
1-32-209
1-PT 32-24
1-PS 32-24
1-PT 32-20

Figure 2: Screening for SRO-only linked to 10 CFR 55.43(b)(5) (Assessment and selection of procedures)

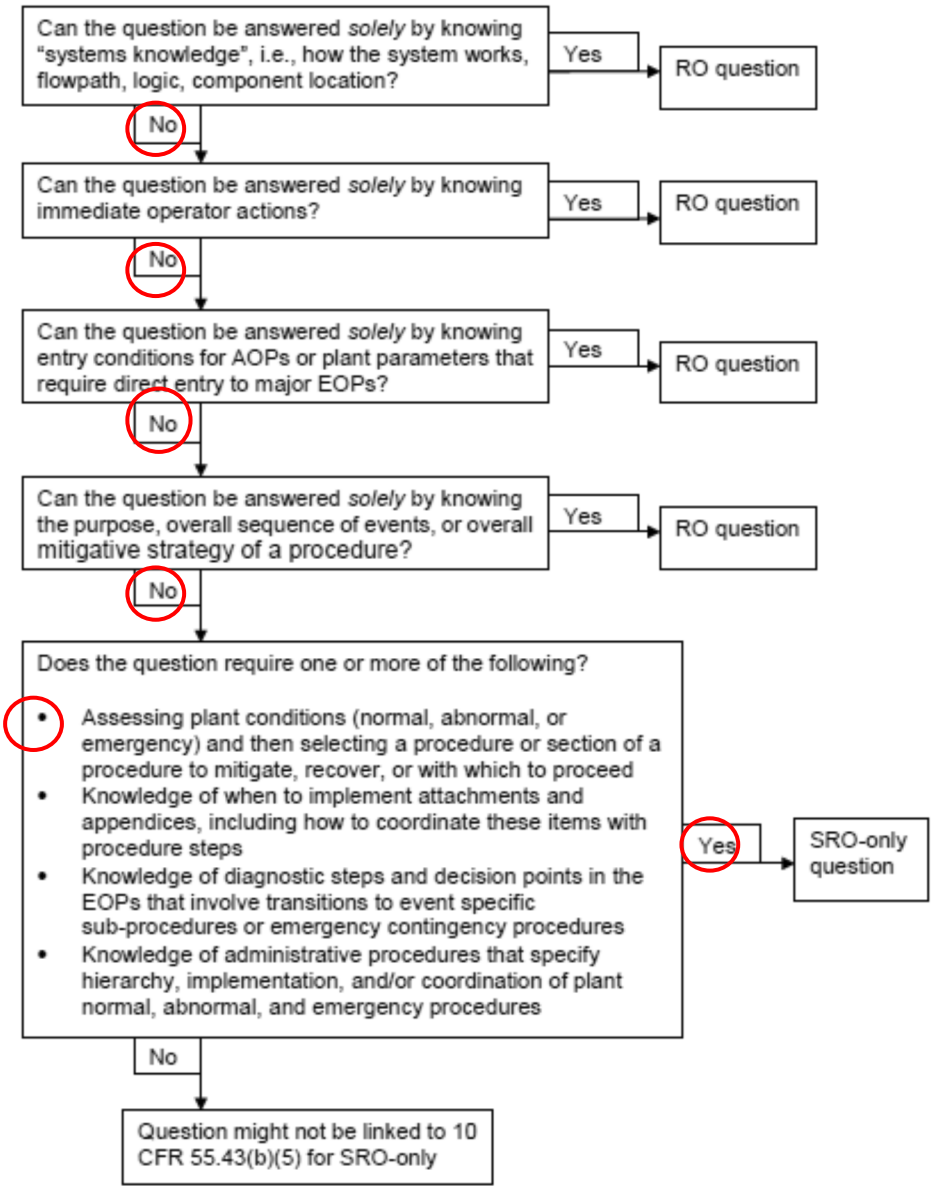

QUESTION 81 Rev 0

The Unit 1 Reactor Steam Dome Pressure spikes to 1350 psig and the Reactor Scrams.

What is the **earliest** notification required In accordance with NPG-SPP-03.5 Regulatory Reporting Requirements?

[REFERENCE PROVIDED]

A. 1 hour report

B. 4 hour report

C. 8 hour report

D. 24 hour report

Answer: A

Examination Outline Cross-Reference	Level:	RO	SRO
	Tier #		1
	Group #		1
	K/A#	295025 G2.4.30	
	Importance Rating		4.1

High Reactor Pressure; Knowledge of events related to system operation/status that must be reported to internal organizations or external agencies, such as State, the NRC, or the transmission system operator.

Justification for K/A match: This is a Tier 1 Abnormal/Emergency K/A tied to an emergency Generic K/A, so the Question sets up a high reactor pressure condition (Abnormal) and then ties it to the SRO portion of the generic about notifying external agencies.

Explanation: CORRECT A: per NPG-SPP-03.5 a violation of a Safety Limit is a 1-hour notification IAW NPG-SPP-03.5.

B. **Incorrect because** – This is not the **earliest** notification that has to be made. **Plausible** LCO 3.4.9 RCS Pressure and Temperature (P/T) Limits was violated and a 4-hour notification, would be required, however the stem of the question requires the earliest notification.

C. **Incorrect because** – This is not the **earliest** notification that has to be made. **Plausible** due to Reactor Protection System Actuation (Scram) is an 8 hour notification per NPG-SPP-03.5.

D. **Incorrect because** – This is not the **earliest** notification that has to be made. **Plausible** due to Any violation of the requirement contained in specific operating license conditions, shall be reported to NRC in accordance with the license condition within 24 hours.

Technical Reference(s): NPG-SPP-03.5 rev 11, Tech Spec 2.1.1

Proposed references to be provided to applicants during examination: **NPG-SPP-03.5**

Learning Objective (As available): OPL 171.0925 Obj 3

Question Source:	Bank: Modified Bank: New: X
Question History:	Previous NRC: None
Question Cognitive Level:	Memory or Fundamental Knowledge Comprehension or Analysis: X
10 CFR Part 55 Content:	43(b)(1)

2.0 SAFETY LIMITS (SLs)
2.1 SLs
2.1.1 Reactor Core SLs

2.1.1.1 With the reactor steam dome pressure < 785 psig or core flow < 10% rated core flow: THERMAL POWER shall be ≤ 25% RTP.

2.1.1.2 With the reactor steam dome pressure ≥ 785 psig and core flow ≥ 10% rated core flow: MCPR shall be ≥ 1.09 for two recirculation loop operation or ≥ 1.11 for single loop operation.

2.1.1.3 Reactor vessel water level shall be greater than the top of active irradiated fuel.

2.1.2 Reactor Coolant System Pressure SL
Reactor steam dome pressure shall be ≤ 1325 psig.

Attachment 1
(Page 3 of 16)

Reporting of Events or Conditions Affecting
Licensed Nuclear Power Plants

3.1 Immediate Notification - NRC (continued)

> **NOTE**
>
> The NRC Event Notification Worksheet may be used in preparing for notifying the NRC. This Worksheet may be obtained directly from the NRC website (www.nrc.gov) by performing a "Form 361" search. Attachment 12 provides guidance for completing NRC Form 361.

A. The Immediate Notification Criteria of §50.72 is divided into 1-hour, 4-hour, and 8- hour phone calls. Notify the NRC Operations Center within the applicable time limit for any item which is identified in the Immediate Notification Criteria.

B. The following criteria require 1-hour notification:

1. 10 CFR 50.36(c)(1)(i)(A), (Technical Specifications) - Safety Limits as defined by the Technical Specifications which have been exceeded (violated)

2. §50.72 (a)(1)(i) - The declaration of any of the Emergency classes specified in the licensee's approved Emergency Plan.

> **NOTE**
>
> If it is discovered that a condition existed which met the Emergency Plan criteria but no emergency was declared and the basis for the emergency class no longer exists at the time of discovery, an ENS notification (and notification of the Operations Duty Specialist), within one hour of discovery of the undeclared (or misclassified) event, shall be made. However, actual declaration of the emergency class is not necessary in these circumstances.

3. §50.72(b)(1) - Any deviation from the plant's Technical Specifications authorized pursuant to §50.54(x).

4. 10 CFR 73, Appendix G, paragraph I - Safeguards Events. The requirements of §73.71, Reporting of Safeguard Events, are also applicable. Refer to NSDP-1, "Safeguards Event Reporting Guidelines," for additional information.

   a. Any event in which there is reason to believe that a person has committed or caused, or attempted to commit or cause, or has made a credible threat to commit or cause:

      (1) A theft or unlawful diversion of special nuclear material; or

Attachment 1
(Page 4 of 16)

Reporting of Events or Conditions Affecting
Licensed Nuclear Power Plants

3.1 Immediate Notification - NRC (continued)

(2) Significant physical damage to a power reactor or any facility possessing SSNM or its equipment or carrier equipment transporting nuclear fuel or spent nuclear fuel, or to the nuclear fuel or spent nuclear fuel a facility or carrier possesses; or

(3) Interruption of normal operation of a licensed nuclear power reactor through the unauthorized use of or tampering with its machinery, components, or controls including the security system. [Note: a Confirmed Cyber Attack at any NPG site is reported to the NRC in accordance with the requirements of 10 CFR 73, Appendix G. Review the 'Incident Categorization' section in NPG-SPP-12.8.8.]

b. An actual entry of an unauthorized person into a protected area, material access area, controlled access area, vital area, or transport.

c. Any failure, degradation, or the discovered vulnerability in a safeguard system that could allow unauthorized or undetected access to a protected area, material access area, controlled access area, vital area, or transport for which compensatory measures have not been employed.

d. The actual or attempted introduction of contraband into a protected area, material access area, vital area, or transport.

C. The following criteria require 4-hour notification:

1. §50.72(b)(2)(i) - The initiation of any nuclear plant shutdown required by the plant's Technical Specifications.

2. §50.72(b)(2)(iv)(A) - Any event that results or should have resulted in Emergency Core Cooling System (ECCS) discharge into the reactor coolant system as a result of a valid signal except when the actuation results from and is part of a pre-planned sequence during testing or reactor operation.

3. §50.72(b)(2)(iv)(B) - Any event or condition that results in actuation of the reactor protection system (RPS) when the reactor is critical except when the actuation results from and is part of a pre-planned sequence during testing or reactor operation.

Attachment 1
(Page 5 of 16)

Reporting of Events or Conditions Affecting
Licensed Nuclear Power Plants

3.1 Immediate Notification - NRC (continued)

NOTES

1) NPG-SPP-05.14 provides additional instructions regarding addressing and informally communicating events to outside agencies involving radiological spills and leaks.

2) Routine or day-to-day communications between TVA organizations and state agencies typically do not constitute a formal notification to other government agencies that would require a report in accordance with §50.72(b)(2)(xi).

4. §50.72(b)(2)(xi) - Any event or situation, related to the health and safety of the public or onsite personnel, or protection of the environment, for which a news release is planned or notification to other government agencies has been or will be made. Such an event may include an onsite fatality or inadvertent release of radioactive contaminated materials.

D. The following criteria require 8-hour notification:

1. §50.72(b)(3)(ii)(A) - Any event or condition that results in the condition of the nuclear power plant, including its principal safety barriers, being seriously degraded.
2. §50.72(b)(3)(ii)(B) - Any event or condition that results in the nuclear power plant being in an unanalyzed condition that significantly degrades plant safety.
3. §50.72(b)(3)(iv)(A) - Any event or condition that results in valid actuation of any of the systems listed in paragraph (b)(3)(iv)(B) [see list below], except when the actuation results from and is part of a pre-planned sequence during testing or reactor operation.
a. The systems to which the requirements of paragraph §50.72(b)(3)(iv)(A) apply are:

(1) Reactor protection system (RPS) including: reactor scram or reactor trip.
(2) General containment isolation signals affecting containment isolation valves in more than one system or multiple main steam isolation valves (MSIVs).

3.2 Twenty-Four Hour Notification - NRC
Any violation of the requirement contained in specific operating license conditions, shall be reported to NRC in accordance with the license condition.

QUESTION 82 Rev 0

A LOCA is in progress. The following conditions exist on Unit 2.

- Rx Pressure is 625 psig
- Rx Water Level on 2-LI-3-52 is (-) 242 inches
- No injection sources are available

Which one of the following completes the statements below?

(SEE GRAPH BELOW)

Actual water level is __ (1) __ and 2-EOI-1, RPV Control, requires entering __ (2) __.

A. (1) greater than (-) 200 inches
(2) Steam Cooling

B. (1) greater than (-) 200 inches
(2) Emergency Depressurization

C. (1) less than (-) 200 inches
(2) Steam Cooling

D. (1) less than (-) 200 inches
(2) Emergency Depressurization

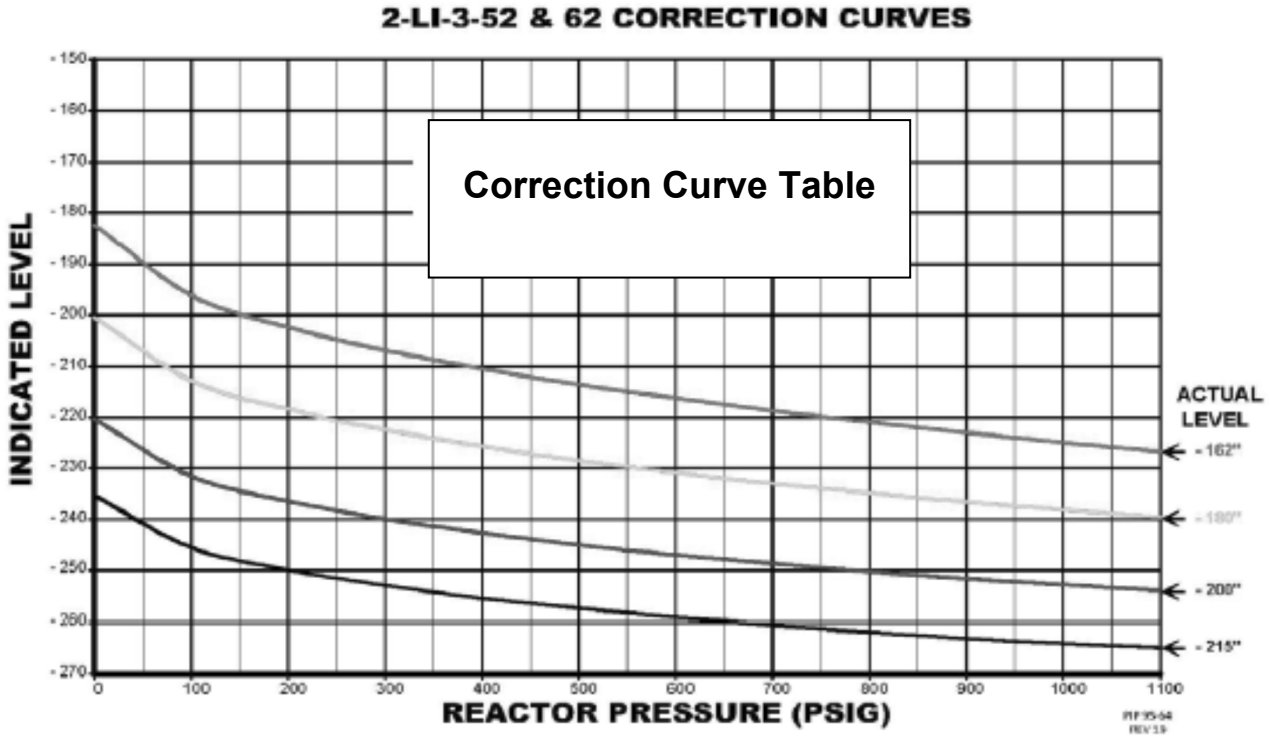

Answer: A

Examination Outline Cross-Reference	Level:	RO	SRO
	Tier #		1
	Group #		1
	K/A#	295031 G2.1.25	
	Importance Rating		4.2

Reactor Low Water Level: Ability to interpret reference materials, such as graphs, curve, tables, etc.

Justification for K/A match: The question asks the candidate to interpret the graph based on information given to determine Reactor water level and select the appropriate procedure section to execute.

Explanation: CORRECT A: 1st part Actual Rx Water Level is above (-)200 inches based on plot actual Reactor Water Level is ≈(-)193 inches. 2nd part correct; The US is currently in 2-EOI-1 steam cooling leg due to no available injection sources as stated in the stem and actual level >(-)200 inches.

B. **Incorrect because –** Actual Reactor Water Level is above (-) 200 inches and since there is no injection, ED is not required until level reaches (-) 200 inches.
Plausible if student believes ED is needed based on Actual Reactor Water Level being <(-)180 inches.

C. **Incorrect because** - Actual Rx Water Level is above (-)200 inches based on plot Actual Reactor Water Level is ≈(-)193 inches. 2nd part correct.
Plausible because the graph can be misread and if pressure was not used the level would be wrong.

D. **Incorrect because** - Actual Rx Water Level is above (-)200 inches based on plot Actual Reactor Water Level is ≈(-)193 inches. 2nd part incorrect and plausible
Plausible since ED might be the mitigating strategy if the level were lower.

Technical Reference(s): 2-EOI-5 rev 0, 2-EOI-1 rev 16

Proposed references to be provided to applicants during examination: **2-LI-3-52 & 62 Correction Curves**

Learning Objective (As available): OPL 171.202 Obj 1, 15

Question Source:	Bank: Modified Bank: New: X
Question History:	Previous NRC: None
Question Cognitive Level:	Memory or Fundamental Knowledge Comprehension or Analysis: X
10 CFR Part 55 Content:	43(b)(5)

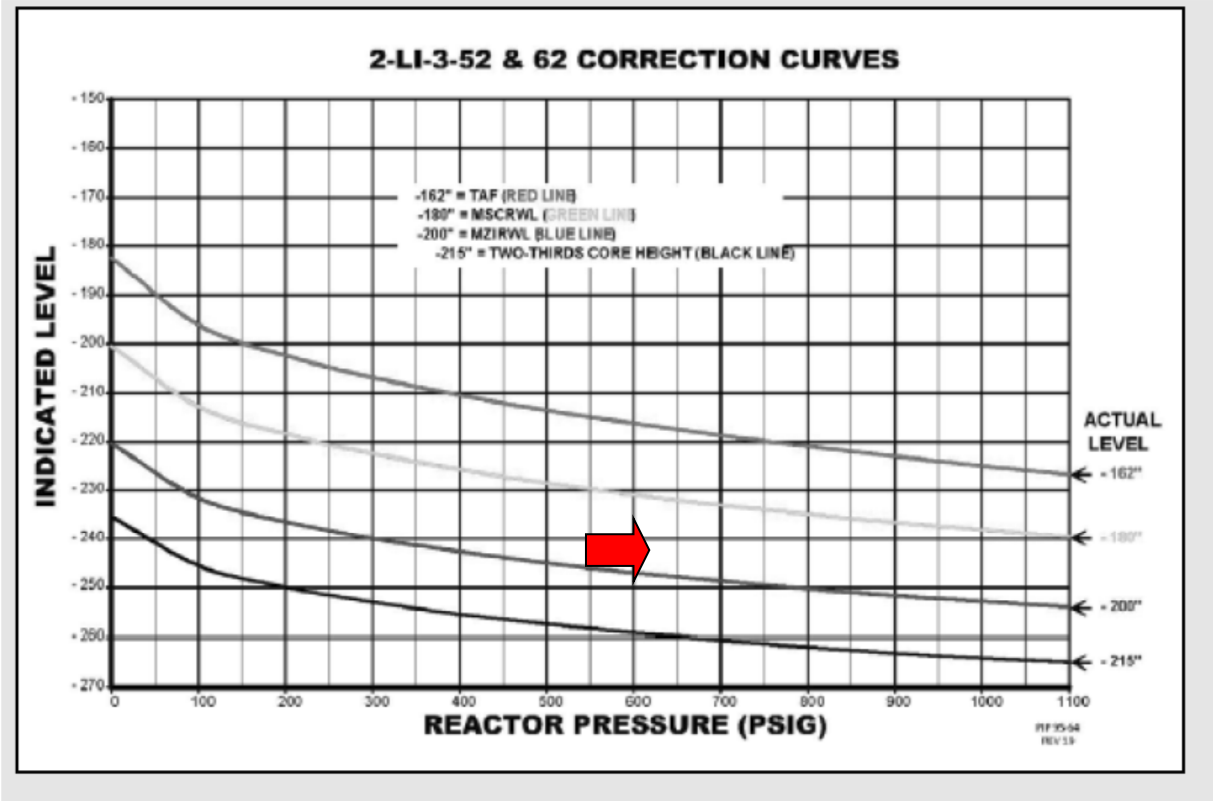

2-EOI-1 RPV CONTROL

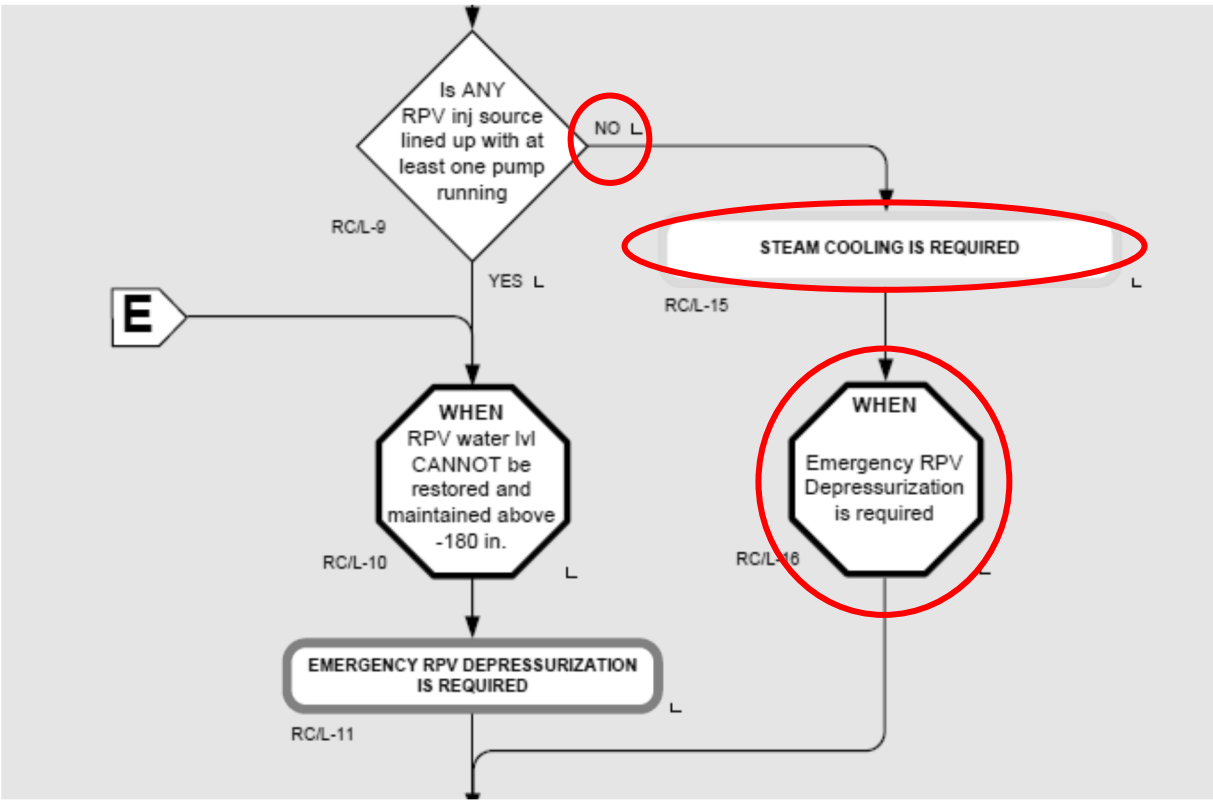

Steam Cooling

D

IF	THEN
EMERGENCY RPV DEPRESSURIZATION IS REQUIRED	2 C2 Emergency RPV Depressurization
ANY injection source is lined up for inj with at least one pump running AND RPV level CANNOT be restored and maintained above -180 in.	EMERGENCY RPV DEPRESSURIZATION IS REQUIRED
ANY MSRV is being used to stabilize RPV press and the continuous pneumatic supply is lost	EMERGENCY RPV DEPRESSURIZATION IS REQUIRED
RPV water lvl is rising due to inj	C AND E

RC/P-9

STABILIZE RPV press with ANY Alternate RPV Pressure Control Systems (Table P-1)

- Crosstie CAD or MSRV carts to DW Control Air (APPX 8G, 20H) if necessary

RC/P-10

WHEN

RPV water lvl drops to -200 in.

RC/P-11

EMERGENCY RPV DEPRESSURIZATION IS REQUIRED

RC/P-12

Table L-3 Adequate Core Cooling	
Adequate core cooling exists if one of the following is met:	
• Core submergence:	RPV water lvl above -162 in.
• Steam Cooling with injection:	RPV water lvl above -180 in.
• Spray cooling:	Either CS subsystem operating with at least 6,250 gpm to the RPV AND RPV water lvl above -215 in.
• Steam cooling without injection:	RPV water lv above -200 in.

Figure 2: Screening for SRO-only linked to 10 CFR 55.43(b)(5) (Assessment and selection of procedures)

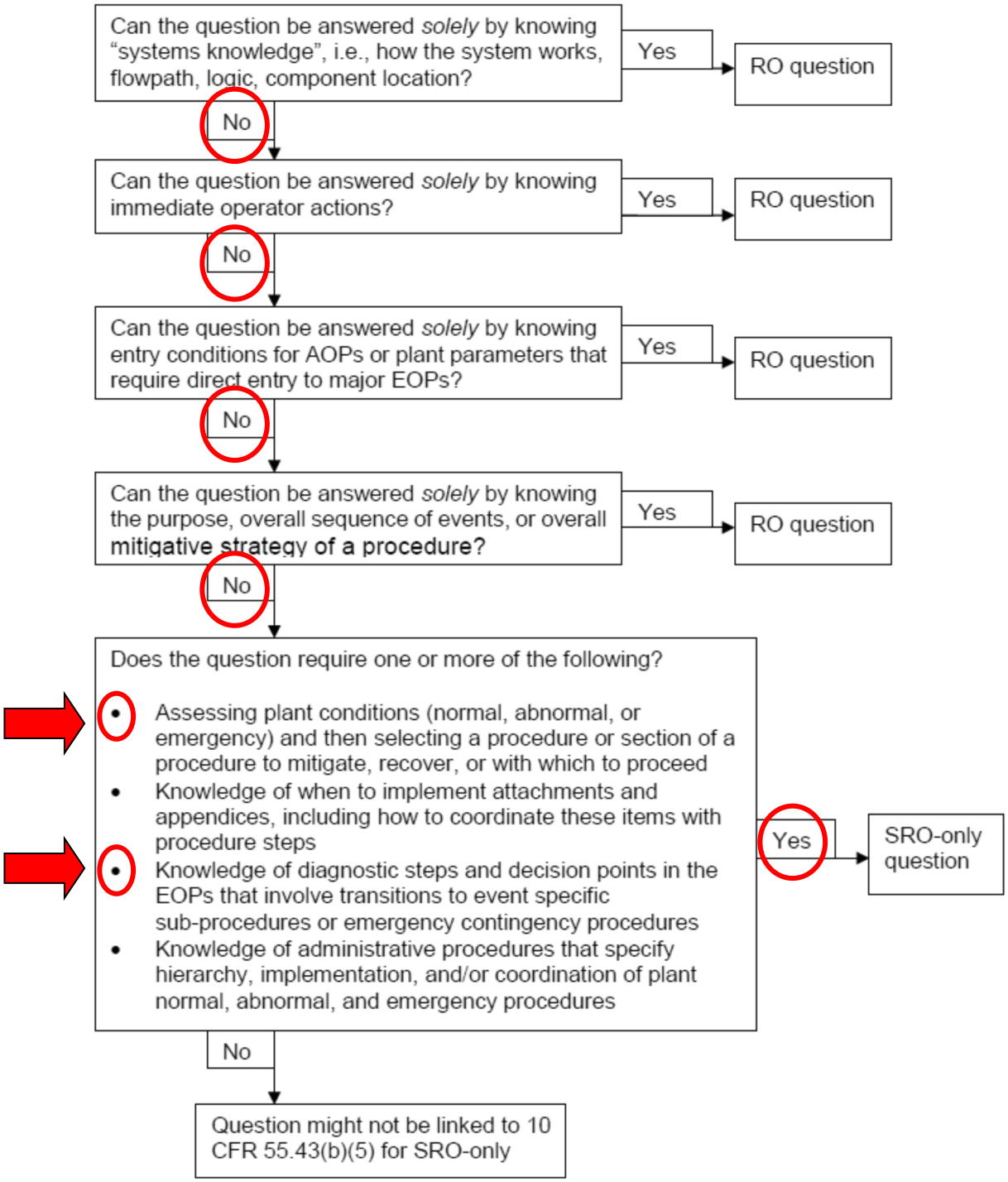

QUESTION 83 Rev 0

Unit 1 is operating at 20% power with two Condenser Circulating Water Pumps in service, when the following occurs:

- CONDENSATE recorder, 1-XR-2-26 indicates (-) 24.8 inches of Hg vacuum and slowly degrading.

Note: 1-AOI-47-3, Loss of Condenser Vacuum
1-AOI-47-1, Unplanned Turbine Trip Below 30% Reactor Power
1-AOI-100-1, Reactor Scram

Which ONE of the following actions (if any) is/are required to be performed?

A. No action required at this time.

B. Enter 1-AOI-47-3 and TRIP the Main Turbine ONLY.

C. Enter 1-AOI-47-1 and VERIFY Main Turbine TRIPPED on low condenser vacuum.

D. Enter 1-AOI-47-3 and 1-AOI-100-1, SCRAM the Reactor, THEN TRIP the Main Turbine.

Answer: B

Examination Outline Cross-Reference	Level:	RO	SRO
	Tier #		1
	Group #		2
	K/A#	295002 AA2.01	
	Importance Rating		3.1

Loss of Main Condenser Vacuum: Ability to determine and/or interpret the following as they apply to LOSS OF MAIN CONDENSER VACUUM : Condenser vacuum/absolute pressure

Justification for K/A match: The question asks the candidate to interpret indicated condenser vacuum compared to the Turbine trip setpoint satisfying the K/A. The SRO only portion is satisfied by procedure selection.

Explanation: B is CORRECT: 1-AOI-47-3 directs tripping the Main Turbine if Reactor Power is <30% and unable to maintain Hotwell Pressure below (-) 25 inches Hg.

A. **Incorrect because** a turbine trip is required by 1-AOI-47-3.
Plausible because the Turbine trip setpoint on low main condenser vacuum is 21.8 inches Hg And IAW ARP 9-7B window 14 the Turbine trip is expected at an indicated (-) 24.3 inches Hg vacuum which is .5 inches below the current value.

C. **Incorrect because** a Turbine trip has not yet occurred.
Plausible due to 1-ARP-7B window 17 Note stating that Turbine Trip is expected at a value other than the Turbine trip setpoint due to differences in the instrument taps for the trip switches and the indication.

D. **Incorrect because** a Reactor Scram is not required below 30% power.
Plausible if the candidate forgets that the Reactor Scram on Turbine trip is bypassed when below 30% power.

Technical Reference(s): 1-AOI-47-3 rev 03, 1-ARP-7B rev 20, 1-OI-47 Rev 48

Proposed references to be provided to applicants during examination: None

Learning Objective (As available): OPL 171A123 obj 10

Question Source:	Bank: Modified Bank: New: X
Question History:	Previous NRC: None
Question Cognitive Level:	Memory or Fundamental Knowledge: Comprehension or Analysis: X
10 CFR Part 55 Content:	43(b)(5)

Figure 2: Screening for SRO-only linked to 10 CFR 55.43(b)(5) (Assessment and selection of procedures)

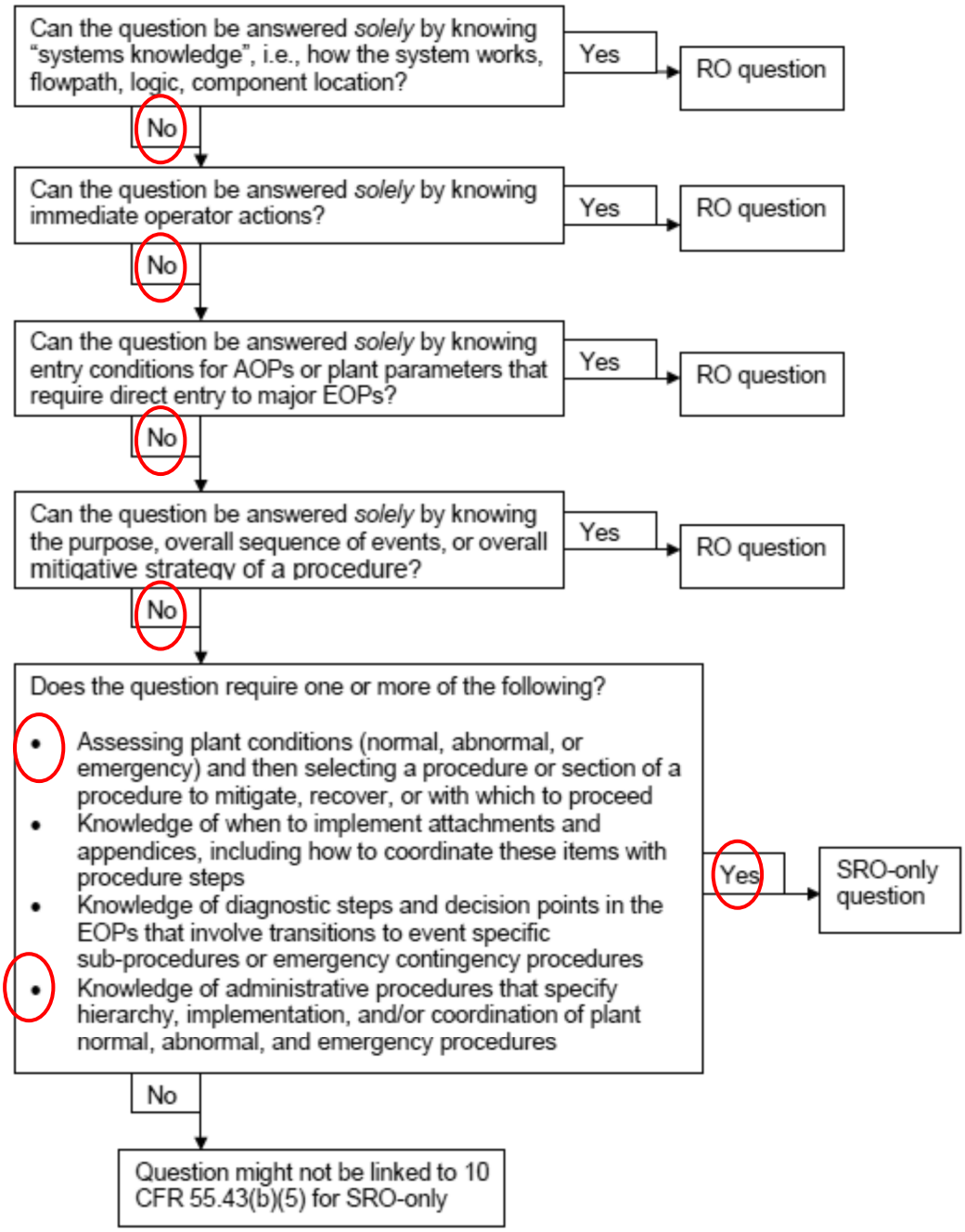

4.0 OPERATOR ACTIONS

4.1 Immediate Actions

None

4.2 Subsequent Actions

[1] **IF** any EOI entry condition is met, **THEN**

ENTER the appropriate EOI(s). ☐

CAUTION

[NRC/C] Operations outside of the allowable regions shown on the Recirculation System Operating Map could result in thermal-hydraulic power oscillations and subsequent fuel damage. 1-GOI-100-12A, Unit S/D from Power to Cold S/D and Power Reduction, may be referenced for required actions and monitoring to be performed during a power reduction. [NCO 940245010]

[2] **IF** Unable to maintain Hotwell pressure below -25 inches Hg as indicated on CONDENSATE, 1-XR-2-26 **AND** Reactor power is less than 30%, **THEN**

TRIP the Main Turbine. ☐

[3] **IF** Condenser vacuum is lost, **THEN**

OPEN the HOTWELL SMPL DR TO CRW, 1-DRV-043-1019 (565' @ T-1 C Line) and CNDS DEMIN SAMPLE DR TO DRW, 1-DRV-043-1020 (557'@ T-6 G Line), to establish flow through the sample lines. ☐

[4] **REDUCE** Reactor power in an attempt to maintain Condenser vacuum.

[5] **VERIFY** automatic actions.

[6] **CHECK** CCW Pumps for proper operation. If available, **START** additional CCW Pumps. ☐

[7] **VERIFY** CONDENSER VAC BREAKERS 1A AND 1B CLOSED using 1-HS-66-1A, Panel 9-8. ☐

CONDENSER A, B OR C VACUUM LOW 1-PA-47-125	17

(Page 1 of 1)

Sensor/Trip Point:

1-PS 47-125-A, B, C 24.3" Hg

NOTE

Turbine trip is expected around an indicated 24.3 inches Hg on 1-XR-2-26 due to differences between instrument taps for turbine trip and indicated (PER 89506)

Sensor Location:
Under West Skirt of Turbine
El 617'
Turbine Bldg

Probable Cause:

A. Malfunction of:
   1. SJAE system.
   2. CCW system.
   3. Turbine sealing system.
   4. Condenser vacuum breakers.
   5. Sensor.
   6. Cooling Tower Operation

Automatic Action:

Any of the following combinations will cause a turbine trip:

- Condenser A, both 1-PS-047-0072A and 72B at 21.8" Hg vacuum.
- Condenser B, both 1-PS-047-0073A and 73B at 21.8" Hg vacuum.
- Condenser C, both 1-PS-047-0074A and 74B at 21.8" Hg vacuum.

Operator Action:

A. **VERIFY** alarm by checking vacuum lowering, MWe lowering, and exhaust hood temperature rise. ☐

B. **IF** alarm is valid, **THEN**
REFER TO 1-AOI-47-3. ☐

References:
1-45E620-10-2 1-47E610-47-3 1-45E602-2
1-45E602-16

Illustration 4
(Page 2 of 6)

Turbine Trip Logic

The following is a list of main Turbine trips:

P.	High Vibration	10 mils sensed by combinations of adjacent bearings as defined further on in this Illustration.
Q.	Loss of Condenser Vacuum	21.8 in Hg. Reference P&L 3.3.1B
R.	Manual	Turbine manual trips Trip pushbutton (Panel 1-9-7) EHC WORK STATION computer screen (Panels 1-9-7 and Panel 1-9-31) Trip pushbutton (front standard)
S.	All modules failed	Occurs when two out of three micronet processors (kernals) fail.
T.	Vicor power supply failure	Loss of both Vicor power supplies located inside Panel 1-9-31.

3.3.1 Automatic Trips

B. Turbine trip on low main condenser vacuum is expected around an indicated 24.3 inches Hg, instead of the 21.8 inches currently stated in this procedure, due to differences between instrument taps for Turbine trip and indicated vacuum.

QUESTION 84 Rev 0

Unit 2 is operating at 100% power.
The Unit Operator reports:

- Drywell pressure is 2.20 psig
- Drywell Temperature is 162 °F
- Drywell to Suppression Chamber Differential pressure is slowly raising

NOTE: 2-AOI-64-1, Drywell Pressure and/or Temperature High or Excessive Leakage into Drywell
2-EOI Appendix-13, Emergency Venting Primary Containment

Which one of the following describes the required actions?

Vent the…

A. Drywell in accordance with 2-AOI-64-1.

B. Suppression Chamber in accordance with 2-AOI-64-1.

C. Drywell in accordance with 2-EOI Appendix-13

D. Suppression Chamber in accordance with 2-EOI Appendix-13

Answer: A

Examination Outline Cross-Reference	Level:	RO	SRO
	Tier #		1
	Group #		2
	K/A#	295010 AA2.06	
	Importance Rating		3.6

High DW Press; Ability to determine and/or interpret the following as they apply to HI DW PRESS: (CFR 43.5) DW temp

Justification for K/A match: This is a Tier 1 Abnormal/Emergency SRO Only K/A to match this the question is setup to have the SRO in the EOIs (Emergency) and have him determine based on Drywell temperature and Pressure how the containment is to be vented (i.e. which procedure is the most appropriate) SRO Only.

Explanation: Correct A: 2-EOI-2 is entered due to Drywell temperature. Step PC/P-1 states: MONITOR and CONTROL PC press below 2.45 psig using the Vent system (AOI-64-1). 2-AOI-64-1 step 4.2[2.5] for Hi DW pressure and step 4.2[3.4] for Hi DW temperature states: Vent the Drywell.

B. **Incorrect because –** In accordance with the guidance in the EOI, the Drywell is to be vented not the Suppression Chamber.
Plausible because venting from the Suppression Chamber takes advantage of the "scrubbing effect" and 2-AOI-64-1 is the correct procedure.

C. **Incorrect because -** EOI-2 has been entered which would normally result in performing an EOI appendix however, using EOI appendix 13 is only directed if Primary Containment Pressure cannot be maintained below 2.45 psig IAW EOI-2 step PC/P-2.
Plausible, this is a method of reducing DW pressure, but in this case, it is not the preferred one to use.

D. **Incorrect because –** venting from the Suppression Chamber takes advantage of the "scrubbing effect" and EOI-2 has been entered which would normally result in performing an EOI appendix.
Plausible this is a method of reducing DW pressure, but in this case, it is not the preferred one to use. Also venting from the Suppression Chamber is the preferred vent path when using EOI appendix 13.

Technical Reference(s): 2-EOI-2 Rev 15, 2-AOI-64-1 Rev 25, 2-EOI Appendix-13 Rev 8

Proposed references to be provided to applicants during examination: None

Learning Objective (As available):

Question Source:	Bank: Modified Bank: New: X
Question History:	Previous NRC: N/A
Question Cognitive Level:	Memory or Fundamental Knowledge Comprehension or Analysis X
10 CFR Part 55 Content:	43(b)(5)

2-EOI-2 PRIMARY CONTAINMENT CONTROL

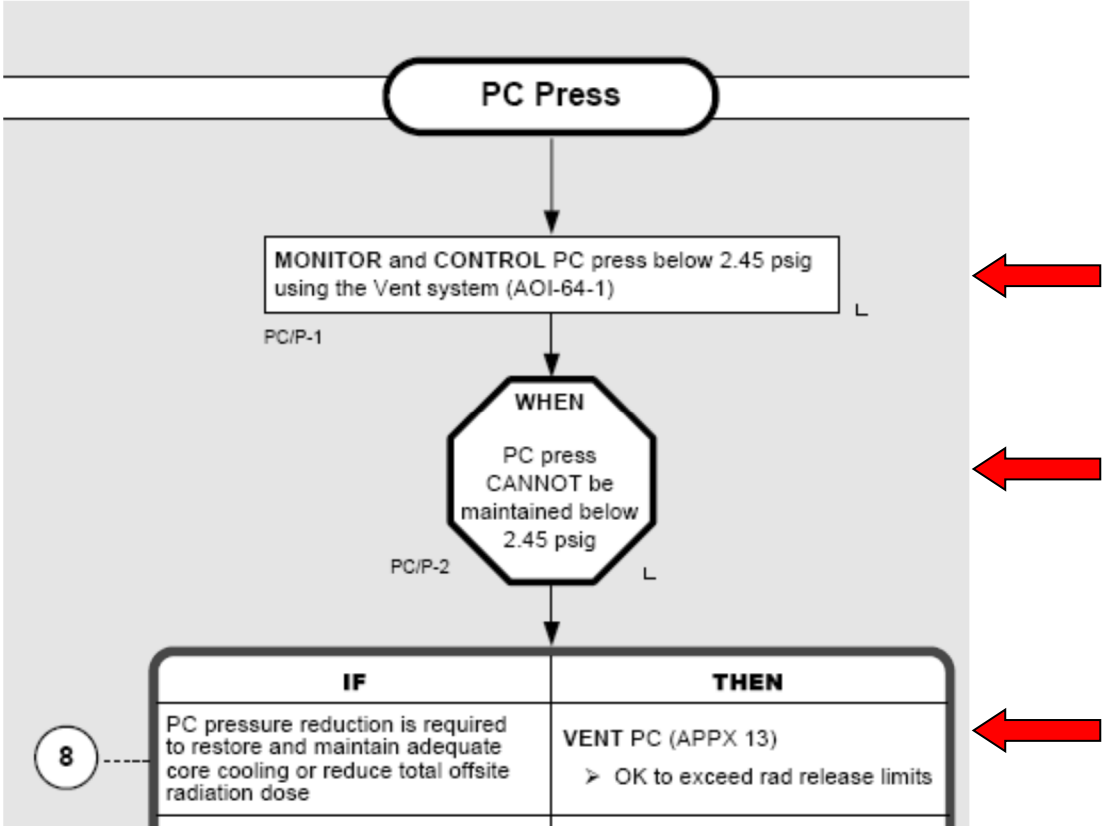

NOTE

8 PC venting may be useful to:

- Restore and maintain adequate core cooling:
  - Lower RPV and PC pressure below injection source discharge pressure
  - Discharge RCIC or HPCI exhaust outside PC during ELAP
- Reduce total offsite dose if:
  - PC integrity has been lost
  - Significant fuel damage is anticipated
  - Suppression chamber vent will be submerged
  - Further degradation of conditions is expected and available personnel resources are limited
- Avoid primary containment challenges if full RPV depressurization did not occur after exceeding a containment limit requiring emergency RPV depressurization

PC pressure control band: 10 to 15 psig provides sufficient margin to NPSH limits and ensures pressure suppression capability

[1] **NOTIFY** SHIFT MANAGER/SED of the following:
- Emergency Venting of Primary Containment is in progress.
- Off-Gas Release Rate Limits will be exceeded.

[2] **VENT** the Suppression Chamber as follows (Panel 2-9-3):

[2.1] **IF** EITHER of the following exists:
- Suppression Pool water level CANNOT be determined to be below 20 ft.

OR
- Suppression Chamber CANNOT be vented, **THEN CONTINUE** in this procedure at Step 1.0[3].

[3] **IF** Suppression Chamber vent path is NOT available, **THEN VENT** the Drywell as follows:

4.2 Subsequent Actions (continued)

[2] **IF** Drywell Pressure is High, **THEN PERFORM** the following:

[2.5] **VENT** Drywell as follows:

4.2 Subsequent Actions (continued)

[3] **IF** Drywell Temperature is High, **THEN PERFORM** the following:

[3.4] **VENT** Drywell. **REFER TO** Section 4.2[2.5].

QUESTION 85 Rev 0

Unit 2 is operating at 70% power performing a sequence exchange when a transient results in the following conditions:

Unit 2 is manually scrammed
2-9-3A window 27 MAIN STEAM LINE RADIATION HIGH-HIGH is in alarm
2-9-3A window 22 RX BLDG AREA RADIATION HIGH is in alarm
2-9-3F window 10 HPCI LEAK DETECTION TEMP HIGH is in alarm

At 1000 the UO reports:

- HPCI Room Temp 73-55A reading 160°F
- HPCI Area Radiation 90-24A reading 500 mR/hr

At 1010 the UO reports:

- HPCI failed to isolate
- HPCI Room Temp 73-55A reading 180°F
- HPCI Area Radiation 90-24A reading 700 mR/hr
- Drywell Radiation 2-RE-90-272A reading 200 R/hr

At 1020 the UO reports:

- HPCI Room Temp 73-55A reading 200°F
- HPCI Area Radiation 90-24A reading 900 mR/hr
- Drywell Radiation 2-RE-90-272A reading 210 R/hr

Based on current trends, what will be the highest event classification required at **1030**?

[REFERENCE PROVIDED]

A. Notification of Unusual Event

B. Alert

C. Site Area Emergency

D. General Emergency

Answer: C

Examination Outline Cross-Reference	Level:	RO	SRO
	Tier #		1
	Group #		2
	K/A#	295033 G 2.4.47	
	Importance Rating		4.2

Hi Sec Cont Area Rad Lvls; Ability to diagnose and recognize trends in an accurate and timely manner utilizing the appropriate control room reference material. (CFR: 43.5)

Justification for K/A match: This is a Tier 1 Abnormal/Emergency K/A tied to an Emergency generic so to match the K/A, The question was written to require the candidate to evaluate the emergency rad level trend and use reference material to classify the event.

Explanation: Correct C: EAL 3.2-S will be met based on an a primary system leak (indicated by the HPCI room temperature) and HPCI area radiation will be above max safe at 1030 based on the current trend.

A. **Incorrect because –** EAL 1.4-U is met but this is not the highest EAL.
Plausible EAL 1.4-U is met

B. **Incorrect because –** EAL 6.1-A-1 is met based on Radiation level and the ARP requirement to investigate the leak but this is not the highest EAL.
Plausible EAL 6.1-A-1 is met

D. **Incorrect because –** the Drywell Radiation level given in the stem is not high enough to cause Unit 2 to escalate to a GE.
Plausible the Drywell Radiation level given in the stem is high enough to cause Unit 1 or Unit 3 to escalate to a GE for the same conditions however it is below the value given in table 3.1-G/3.2-G for Unit 2.

Technical Reference(s): 2-ARP-9-3A Rev 49, 2-ARP-9-3F Rev 33, EPIP-1 Rev 51

Proposed references to be provided to applicants during examination: **EPIP-1 classification matrix**

Learning Objective (As available): OPL 171.075 R27 OBJ 2

Question Source:	Bank: Modified Bank: New: X
Question History:	Previous NRC: None
Question Cognitive Level:	Memory or Fundamental Knowledge Comprehension or Analysis X
10 CFR Part 55 Content:	43(b)(5)

MAIN STEAM LINE RADIATION HIGH-HIGH 2-RA-90-0135C	27

(Page 1 of 1)

Sensor/Trip Point:

2-RM-90-136
2-RM-90-137

Setpoint is 3.0 x normal full power background including N-16 contribution and HWC System injection.

Sensor Location: Radiation monitor drawers are on Panel 2-9-10 in the control room.

Probable Cause:
A. Radiation is three times the normal full power background.
B. Sensor malfunctions.
C. SI/SR in progress.

Automatic Action:
A. Mechanical vacuum pumps trip .
B. Vacuum pump suction valves 2-FCV-66-36 and 2-FCV-66-40 close.

Operator Action:
A. **VERIFY** the alarm on 2-RM-90-136 and 2-RM-90-137 on Panel 2-9-10. ☐
B. **CONFIRM** main steam line radiation level on recorder 2-RR-90-135, Panel 2-9-2. ☐
C. **IF** alarm is valid and Reactor Scram has not occurred, **THEN PERFORM** the following:
   1. **IF** core flow is above 60% **THEN LOWER** core flow to between 50-60%.. ☐
   2. **MANUALLY SCRAM** the Reactor. ☐
   3. **REFER** to 2-AOI-100-1 . ☐

D. **IF** SLC injection per RC/Q of EOI-1 is NOT required, **THEN VERIFY** the MSIVs closed. ☐
E. **NOTIFY** RAD PRO. ☐
F. **VERIFY** actions of 2-ARP-9-3A Window 7 have been completed. ☐
G. **IF** Technical Specification limits are exceeded, **THEN REFER TO** EPIP-1. ☐

References:

2-47E610-90-1	GE 2-730E915-9, 10	2-45E620-5
Technical Specifications	Technical Requirements Manual	

RX BLDG AREA RADIATION HIGH 2-RA-90-1D	22

(Page 1 of 2)

Sensor/Trip Point:

RI-90-4A	RI-90-24A	For setpoints
RI-90-9A	RI-90-25A	REFER TO
RI-90-13A	RI-90-26A	2-SIMI-90B.
RI-90-14A	RI-90-27A	
RI-90-20A	RI-90-28A	
RI-90-21A	RI-90-30A	
RI-90-R22A	RI-90-29A	
RI-90-23A		

Sensor Location:

RE-90-4	MG set area	Rx Bldg El 639' R-10 S-LINE
RE-90-9	Clean-up System	Rx Bldg El 621' R-9 T-LINE
RE-90-13	North Clean-up Sys	Rx Bldg El 593' R-9 P-LINE
RE-90-14	South Clean-up Sys	Rx Bldg El 593' R-9 S-LINE
RE-90-20	CRD-HCU West	Rx Bldg El 565' R-9 R-LINE
RE-90-21	CRD-HCU East	Rx Bldg El 565' R-13 R-LINE
RE-90-22	TIP Room	Rx Bldg El 565' R-12 P-LINE
RE-90-23	TIP Drive	Rx Bldg El 565' R-12 P-LINE
RE-90-24	HPCI Room*	Rx Bldg El 519' R-14 U-LINE
RE-90-25	RHR West	Rx Bldg El 519' R-8 U-LINE
RE-90-26	Core Spray-RCIC	Rx Bldg El 519' R-9 N-LINE
RE-90-27	Core Spray	Rx Bldg El 519' R-14 N-LINE
RE-90-28	RHR East	Rx Bldg El 519' R-14 U-LINE
RE-90-30	Fuel Storage Pool	Rx Bldg El 664' R-12 P-LINE
RE-90-29	Suppression Pool	Rx Bldg El 519' R-14 U-LINE

Probable Cause:

A. Radiation levels have risen above alarm setpoint.
B. Dry Cask Storage activities in progress (activities could affect rad levels sensed by 2-RE-90-30)

NOTE

Due to the location of the Rad Monitor in relation to the Test line in the HPCI Quad, the HPCI Room Rad Alarm may be received when the HPCI Flow test is in progress.

C. HPCI Flow Rate Surveillance in Progress.

Automatic Action: None

Continued on Next Page

RX BLDG AREA RADIATION HIGH 2-RA-90-1D, Window 22
(Page 2 of 2)

Operator Action:

A. **DETERMINE** area with high radiation level on Panel 2-9-11. (Alarm on Panel 2-9-11 will automatically reset if radiation level lowers below setpoint.) ☐

B. **IF** Dry Cask storage activities are in progress, **THEN NOTIFY** CASK Supervisor. ☐

C. **IF**alarm is from the HPCI Room while Flow testing is performed, **NOTIFY** personnel at the HPCI Quad to validate conditions. ☐

D. **NOTIFY** RAD PRO. ☐

E. **IF** the TSC is **NOT** manned and a "VALID" radiological condition exists, **THEN**
USE public address system to evacuate area where high radiological conditions exist. ☐

F. **IF** TSC is manned and "VALID" radiological condition exists, **THEN NOTIFY** TSC to evacuate non-essential personnel from affected areas. ☐

G. **MONITOR** other parameters providing input to this annunciator frequently as these parameters will be masked from alarming while this alarm is sealed in. ☐

H. **IF** a CREV initiation is received, **THEN**
   1. **VERIFY** CREV A(B) Flow is ≥ 2700 CFM, and ≤ 3300 CFM as indicated on 0-FI-031-7214(7213) within 5 hours of the CREV initiation. [BFPER 03-017922] ☐
   2. **IF** CREV A(B) Flow is **NOT** ≥ 2700 CFM, and ≤ 3300 CFM as indicated on 0-FI-031-7214(7213), **THEN**
      PERFORM the following: (Otherwise **N/A**) [BFPER 03-017922]
      a. **STOP** the operating CREV per 0-OI-31. ☐
      b. **START** the standby CREV per 0-OI-31. ☐

I. **IF** alarm is due to malfunction, **REFER TO** 0-OI-55. ☐

J. For all radiation indicators except FUEL STORAGE POOL radiation indicator, 2-RI-90-30, **ENTER** 2-EOI-3 Flowchart. ☐

K. **REFER TO** 2-AOI-79-1 or 2-AOI-79-2 if applicable. ☐

References:

2-45E620-3 2-45E610-90-1 GE 0-730E356-1

TVA Calc NDQ00902005008/EDC63693

HPCI LEAK DETECTION TEMP HIGH 2-TA-73-55	10

(Page 1 of 1)

Sensor/Trip Point:

TS-73-55A	150°F
TS-73-55B	150°F
TS-73-55C	150°F
TS-73-55D	150°F

Sensor Location: Panel 2-9-21, Main Control Rm El 617'.

Probable Cause:
A. HPCI steam line leak.
B. Sensor malfunction.

Automatic Action: Continued rise will cause the following valves to isolate (at Steamline Space Temperature of 165°F Torus Area or 185°F HPCI Pump Room):
- HPCI STEAMLINE INBD ISOL VALVE, 2-FCV-73-2
- HPCI STEAM LINE OUTBD ISOL VALVE, 2-FCV-73-3
- HPCI STEAMLINE WARM-UP VALVE, 2-FCV-73-81.
- HPCI SUPP POOL INBD SUCT VLV, 2-FCV-73-26.
- HPCI SUPP POOL OUTBD SUCT VLV, 2-FCV-73-27.
- HPCI PUMP MIN FLOW VALVE, 2-FCV-73-30
- HPCI TURBINE STOP VALVE, 2-FCV-73-18

Operator Action:
A. **CHECK** HPCI temperature switches on LEAK DETECTION SYSTEM TEMPERATURE indicator, 2-TI-69-29 on Panel 2-9-21. ☐
B. **IF** high temperature is confirmed, **THEN ENTER** 2-EOI-3 Flowchart. ☐
C. **CHECK** the following on Panel 2-9-11 and **NOTIFY** RADCON if rising radiation levels are observed: ☐
   1. HPCI ROOM El 519 RX BLDG radiation indicator, 2-RI-90-24A. ☐
   2. RHR WEST ROOM El 519 RX BLDG radiation indicator, 2-RI-90-25A. ☐

D. **DISPATCH** personnel to investigate for leaks consistent with ALARA considerations in HPCI Turbine Area (El 519) and HPCI Steam Supply Area (El 550). ☐

References: 2-47E610-73-1 2-47E610-69-1 920D351 2-45E620-1

MSL / OFFGAS RADIATION	LOSS OF DECAY HEAT REMOVAL	
Description	Description	
1.4-U		UNUSUAL EVENT
Valid MAIN STEAM LINE RADIATION HIGH-HIGH alarm, 1, 2, or 3-RA-90-135C **OR** Valid OG PRETREATMENT RADIATION HIGH alarm, 1, 2, or 3-RA-90-157A. OPERATING CONDITION: Mode 1 or 2 or 3		

6.1-A1	6.1-A2	
Valid, unexpected increase of ANY in-plant ARM reading to 1000 mrem/hr (except TIP room). **AND** Personnel required in the affected area(s). OPERATING CONDITION: ALL	Control Room radiation levels greater than 15 mrem/hr. OPERATING CONDITION: ALL	ALERT

3.2-S | | | **TABLE** | **US**

An unisolable Primary System leak is discharging into Secondary Containment

AND

Any area radiation level at or above the Maximum Safe Operating Area radiation limit listed in Table 3.2.

OPERATING CONDITION:
Mode 1 or 2 or 3

SITE EMERGENCY

TABLE 3.2
MAXIMUM SAFE OPERATING AREA RADIATION LIMITS

AREA	RAD MONITOR	MAX SAFE VALUE MR/HR		
		UNIT 1	UNIT 2	UNIT 3
RHR West Room	90-25A	1000	1000	1000
RHR East Room	90-28A	1000	1000	1000
HPCI Room	90-24A	1000	1000	1000
CS/RCIC Room	90-26A	1000	1000	1000
Core Spray Room	90-27A	1000	1000	1000
Suppr Pool Area	90-29A	1000	1000	1000
CRD-HCU West Area	90-20A	1000	1000	1000
CRD-HCU East Area	90-21A	1000	1000	1000
TIP Drive Area	90-23A	1000	1000	1000
North RWCU System Area	90-13A	1000	1000	1000
South RWCU System Area	90-14A	1000	1000	1000
RWCU System Area	90-9A	1000	1000	1000
MG Set Area	90-4A	1000	1000	1000
Fuel Pool Area	90-1A	1000	1000	1000
Service Flr Area	90-2A	1000	1000	1000
New Fuel Storage	90-3A	1000	N/A	N/A

3.2-G | | | **TABLE** | **US**

An unisolable Primary System leak is discharging into Secondary Containment

AND

Any area radiation level at or above the Maximum Safe Operating Area radiation limit listed in Table 3.2.

AND

Any indication of potential or significant fuel cladding failure exists. Refer to Table 3.1-G/3.2-G with RCS Barrier intact inside Primary Containment.

OPERATING CONDITION
Mode 1 or 2 or 3

GENERAL EMERGENCY

TABLE 3.1-G/3.2-G
INDICATIONS OF POTENTIAL OR SIGNIFICANT FUEL CLADDING FAILURE WITH RCS BARRIER INTACT INSIDE PRIMARY CONTAINMENT

UNIT 1 DRYWELL RADIATION		UNIT 2 DRYWELL RADIATION		UNIT 3 DRYWELL RADIATION	
1-RE-90-272A	≥ 196 R/HR	2-RE-90-272A	≥ 642 R/HR	3-RE-90-272A	≥ 196 R/HR
1-RE-90-273A	≥ 297 R/HR	2-RE-90-273A	≥ 297 R/HR	3-RE-90-273A	≥ 297 R/HR
Reactor Coolant Activity ≥ 300 µCi/gm Dose Equivalent Iodine 131		Reactor Coolant Activity ≥ 300 µCi/gm Dose Equivalent Iodine 131		Reactor Coolant Activity ≥ 300 µCi/gm Dose Equivalent Iodine 131	

QUESTION 86 Rev 1

The B Diesel Generator was tagged for a 2 year inspection at **0100** on 11/23/2015.

An electrical fault occurred at **0900** on 11/23/2015.

See attached Unit 2 ICS screen shot:
Evaluate the results of the fault and subsequent Operator actions.

Which one of the following are the **most limiting required** actions?

Enter **Tech Spec 3.1.7**, Standby Liquid Control (SLC) System, Condition _____.

[REFERENCE PROVIDED]

A. **A** at 0900 and restore the INOP subsystem by 0900 on 11/30/2015

B. **A and B** at 0900 and restore one subsystem by 1700 on 11/23/2015

C. **A** at 0900 **and B** at 1300 and restore one subsystem by 2100 on 11/23/2015

D. **B** at 0900 **and C** at 1700 and be in MODE 3 by 0500 on 11/24/2015

Answer: C

ELECTRICAL BUSSES

Main Alarms Graphics Trends Points Zoom/Layers Print Help

2 PRINT PROCESSING print request submitted to PrintBW

SELECT FUNC KEY OR TURN ON CODE ELECBUS

SPDS

USST A LOAD:	14.7 MW	DG A OUTPUT:	DEENERG	MAIN GEN BRKR:	CLOSED
USST B LOAD:	10.1 MW	DG B OUTPUT:	DEENERG	MAIN GEN:	1154 * MVA
STARTUP BUS 1A FEED:	0.0 MW	DG C OUTPUT:	DEENERG		100 MVAR
STARTUP BUS 1A FEED:	0.0 MW	DG D OUTPUT:	DEENERG		1150 MW
500 KV BUS VOLTAGE:	525.0 KV	RPS MG SET A:	NOTTRIP		1.00* PF
161 KV BUS VOLTAGE:	167.2 KV	RPS MG SET B:	NOTTRIP	MAIN XFMR:	1238 AMPS

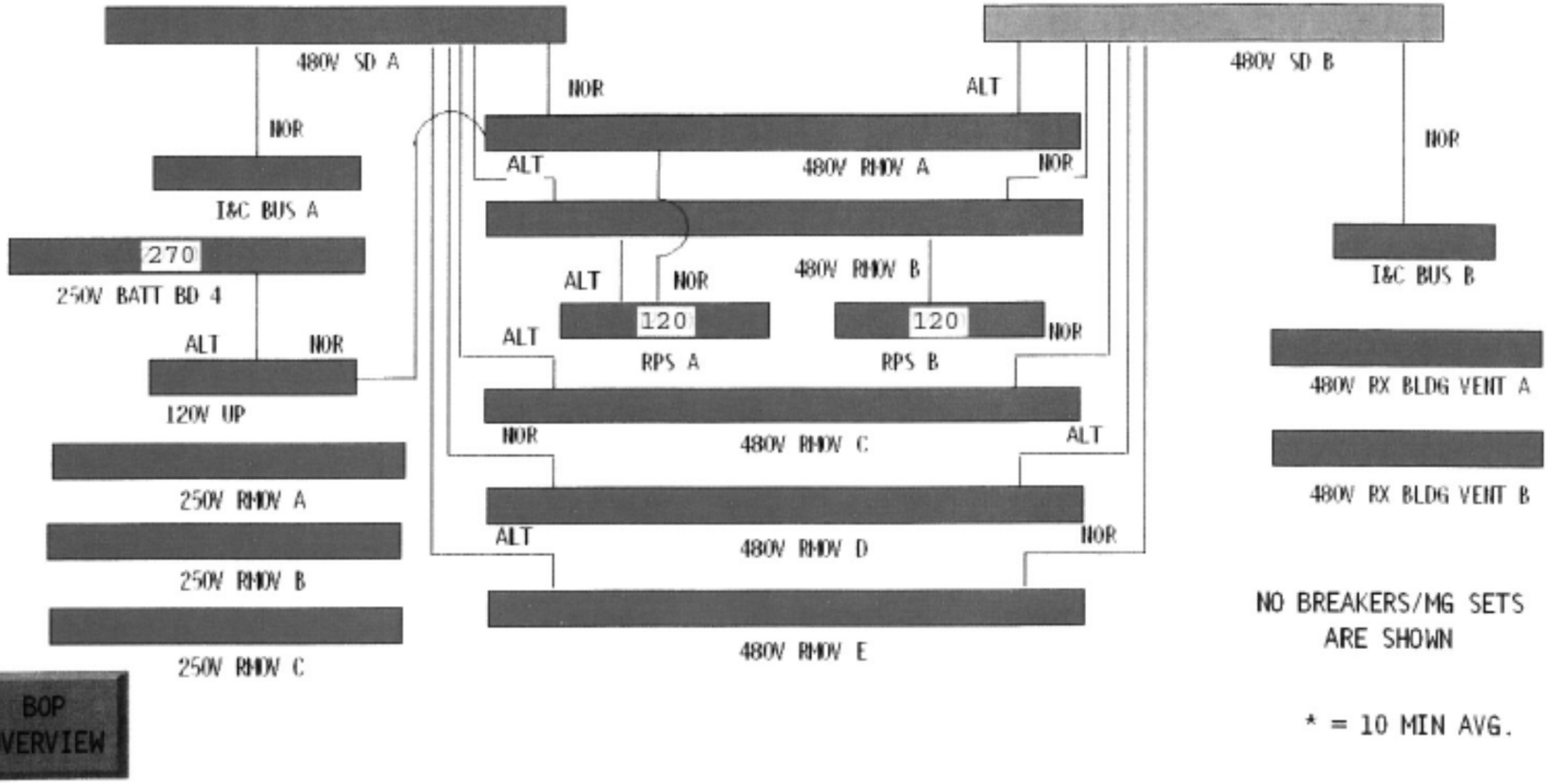

NO BREAKERS/MG SETS ARE SHOWN

* = 10 MIN AVG.

BOP OVERVIEW

PREVIOUS (F7) | CANCEL (ESC) | F1=SET RATE | F2= | F3=HISTORY | F4= | F5=POINT IDs | F6=

PG UP PG DN

BFN U2 Sim

Examination Outline Cross-Reference	Level:	RO	SRO
	Tier #	1	
	Group #	1	
	K/A#	211000G2.1.19	
	Importance Rating	3.9	3.8

Standby Liquid Control System; Ability to use plant computers to evaluate system or component status. (CFR: 41.10 / 45.12)

Justification for K/A match: The only tie between the SLC system and the plant computer is the electrical status page on the ICS. The question requires knowledge of the SLC system and plant Tech Spec to satisfy the SRO only requirement.

Explanation: Correct C: Loss of the 2B 480V shutdown board will INOP the 2B SLC subsystem. 4 hours later (1300) the 2A SLC subsystem is required to be declared INOP IAW Tech Spec 3.8.1.B.3 which results in a loss of safety function for SLC. With a loss of safety function LCO 3.0.6 requires complying with LCO 3.1.7. Since 2 SLC subsystems are INOP Tech Spec 3.1.7 condition B is entered at 1300 and allows 8 hours to restore one subsystem to operable status.

A. **Incorrect because –** This is not the most limiting condition.
Plausible in that condition A would be entered at 0900 (if LCO 3.0.6 is not taken) however, this is not the most limiting condition required to be entered.

B. **Incorrect because –** Condition B is not required to be entered until1300.
Plausible if the candidate knows that Condition A and B apply but forgets that Tech Spec 3.8.1.B allows 4 hours before declaring redundant equipment (2A SLC) INOP.

D. **Incorrect because –** Condition C should not be entered until 12 hours after the loss of power.
Plausible if the candidate forgets that Tech Spec 3.8.1.B allows 4 hours before declaring redundant equipment (2A SLC) INOP.

Technical Reference(s): OPL 171.039 Rev 17, U2 Tech Spec Amendment No. 290

Proposed references to be provided to applicants during examination: **TS 3.8.1 and 3.1.7**

Learning Objective (As available): OPL 171.039 Rev 17 OBJ 10

Question Source:	Bank: Modified Bank: New: X
Question History:	Previous NRC: None
Question Cognitive Level:	Memory or Fundamental Knowledge Comprehension or Analysis X
10 CFR Part 55 Content:	43(b)(2)

Electrical power is provided to SLC Pump A by its respective Unit's 480V Shutdown Board A. SLC Pump B receives power from its Unit's 480V Shutdown Board B.

ACTIONS (continued)

CONDITION	REQUIRED ACTION	COMPLETION TIME
B. (continued)	B.2 Evaluate availability of both temporary diesel generators (TDGs).	1 hour AND Once per 12 hours thereafter
	B.3. Declare required feature(s), supported by the inoperable Unit 1 and 2 DG, inoperable when the redundant required feature(s) are inoperable.	4 hours from discovery of Condition B concurrent with inoperability of redundant required feature(s)

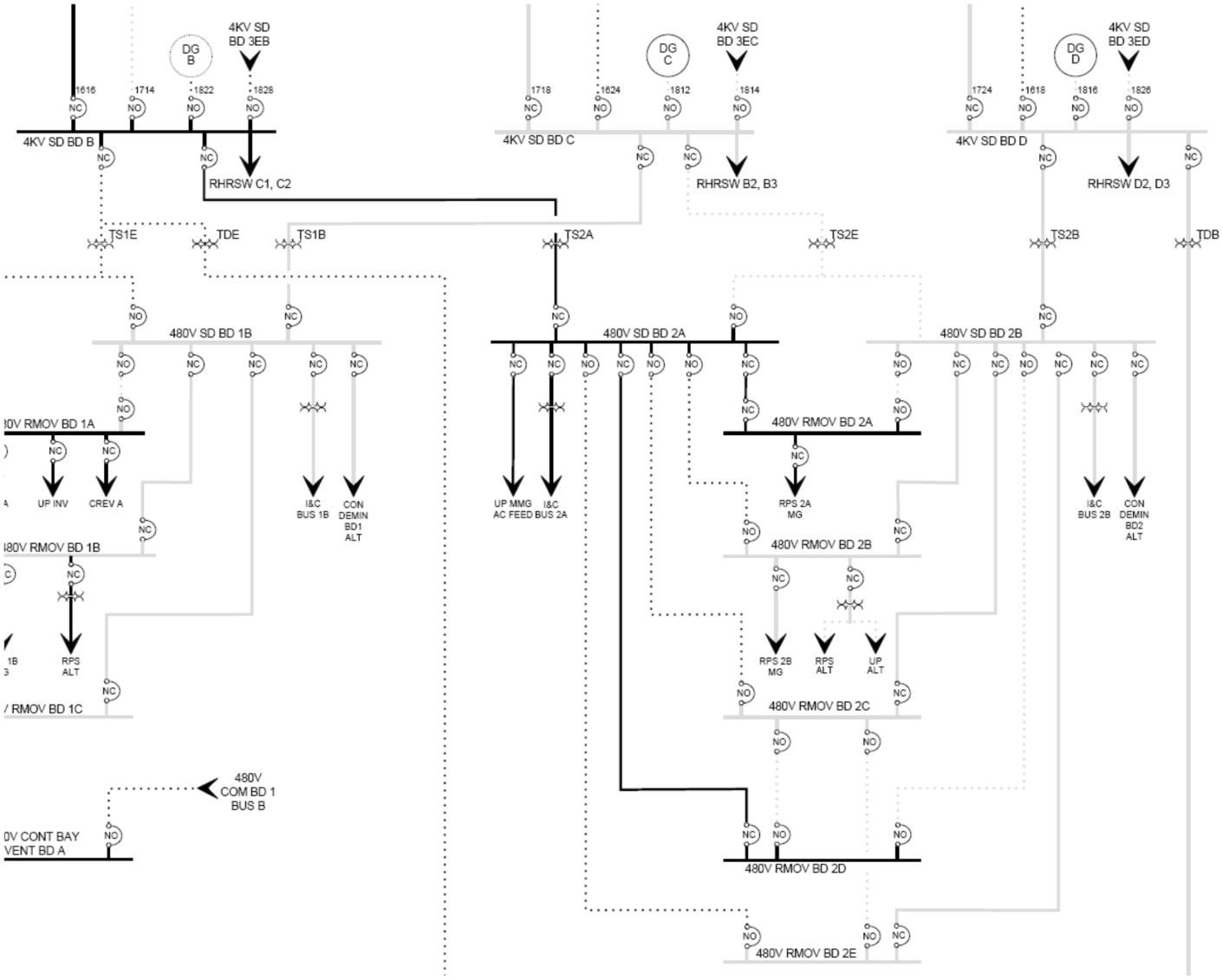
4KV SD BD 3EB
DG B
1616
1714
1822
1828
4KV SD BD B
RHRSW C1, C2
4KV SD BD 3EC
DG C
1718
1624
1812
1814
4KV SD BD C
RHRSW B2, B3
4KV SD BD 3ED
DG D
1724
1618
1816
1826
4KV SD BD D
RHRSW D2, D3
TS1E
TDE
TS1B
TS2A
TS2E
TS2B
TDB
480V SD BD 1B
480V SD BD 2A
480V SD BD 2B
0V RMOV BD 1A
UP INV
CREV A
I&C BUS 1B
CON DEMIN BD1 ALT
UP MMG AC FEED
I&C BUS 2A
480V RMOV BD 2A
RPS 2A MG
I&C BUS 2B
CON DEMIN BD2 ALT
80V RMOV BD 1B
RPS ALT
480V RMOV BD 2B
RPS 2B MG
RPS ALT
UP ALT
/ RMOV BD 1C
480V RMOV BD 2C
480V COM BD 1 BUS B
0V CONT BAY VENT BD A
480V RMOV BD 2D
480V RMOV BD 2E

3.1 REACTIVITY CONTROL SYSTEMS

3.1.7 Standby Liquid Control (SLC) System

LCO 3.1.7 Two SLC subsystems shall be OPERABLE.

APPLICABILITY: MODES 1, 2, and 3.

ACTIONS

CONDITION	REQUIRED ACTION	COMPLETION TIME
A. One SLC subsystem inoperable.	A.1 Restore SLC subsystem to OPERABLE status.	7 days
B. Two SLC subsystems inoperable.	B.1 Restore one SLC subsystem to OPERABLE status.	8 hours
C. Required Action and associated Completion Time not met.	C.1 Be in MODE 3. AND C.2 Be in MODE 4.	12 hours 36 hours

LCO 3.0.6 When a supported system LCO is not met solely due to a support system LCO not being met, the Conditions and Required Actions associated with this supported system are not required to be entered. Only the support system LCO ACTIONS are required to be entered. This is an exception to LCO 3.0.2 for the supported system. In this event, an evaluation shall be performed in accordance with Specification 5.5.11, "Safety Function Determination Program (SFDP)." If a loss of safety function is determined to exist by this program, the appropriate Conditions and Required Actions of the LCO in which the loss of safety function exists are required to be entered. When a support system's Required Action directs a supported system to be declared inoperable or directs entry into Conditions and Required Actions for a supported system, the applicable Conditions and Required Actions shall be entered in accordance with LCO 3.0.2.

QUESTION 87 Rev 1

Unit 3 is in MODE 2 with the following IRMs bypassed:

- IRM E is Bypassed
- IRM D is Bypassed

At 08:00, IRM C fails downscale.

Which one of the following completes the statement below?

Based on the conditions given Tech Spec 3.3.1.1 condition _____ is required to be entered.

[REFERENCE PROVIDED]

A. A

B. B

C. C

D. G

Answer: A

Examination Outline Cross-Reference	Level:	RO	SRO
	Tier #		2
	Group #		1
	K/A#	215003 G2.2.22	
	Importance Rating	4.0	4.7

215003 Intermediate Range Monitor (IRM) System: Knowledge of limiting conditions for operations and safety limits. (CFR: 41.5 / 43.2 / 45.2)

Justification for K/A match: This question requires knowledge of the IRM system and application of Tech Spec.

Explanation: Correct A: The stem of the question has one IRM in each channel bypassed (INOP) however only 3 IRMs per channel are required to be Operable IAW Tech Spec table 3.3.1.1-1. When IRM C fails downscale one required channel is INOP in one trip system and Tech Spec 3.3.1.1 condition A is required to be entered.

B. Incorrect because – only one trip system has a required channel INOP.
Plausible because – Both trip systems have INOP IRMs.

C. Incorrect because – RPS trip capability is maintained.
Plausible because – Tech Spec table 3.3.1.1-1 indicates 3 IRMs per channel are required to be operable. If the candidate thinks there are only 3 IRMs per channel one trip system would only have one channel remaining and would not be able to met 2 out of 3 logic which is common.

D. Incorrect because – Condition G is not entered unless directed by condition D.
Plausible because – Condition G is listed in Tech Spec table 3.3.1.1-1

Technical Reference(s): Tech Spec 3.3.1.1 RPS Instrumentation and Table 3.3.1.1-1 Amendment No. 221

Proposed references to be provided to applicants during examination: Tech Spec 3.3.1.1 RPS Instrumentation and Table 3.3.1.1-1

Learning Objective (As available): OPL 171.020 obj V.B.8

Question Source:	Bank: Modified Bank: New: X
Question History:	Previous NRC: None
Question Cognitive Level:	Memory or Fundamental Knowledge: Comprehension or Analysis: X
10 CFR Part 55 Content:	43(b)(2)

3.3 INSTRUMENTATION

3.3.1.1 Reactor Protection System (RPS) Instrumentation

LCO 3.3.1.1 The RPS instrumentation for each Function in Table 3.3.1.1-1 shall be OPERABLE.

APPLICABILITY: According to Table 3.3.1.1-1.

ACTIONS

----------NOTE----------
Separate Condition entry is allowed for each channel.

CONDITION	REQUIRED ACTION	COMPLETION TIME
A. One or more required channels inoperable.	A.1 Place channel in trip.	12 hours
	OR	
	A.2 ----------NOTE---------- Not applicable for Functions 2.a, 2.b, 2.c, 2.d, or 2.f. ---------- Place associated trip system in trip.	12 hours

(continued)

ACTIONS (continued)

CONDITION	REQUIRED ACTION		COMPLETION TIME
B. ----------NOTE---------- Not applicable for Functions 2.a, 2.b, 2.c, 2.d, or 2.f. ---------- One or more Functions with one or more required channels inoperable in both trip systems.	B.1	Place channel in one trip system in trip.	6 hours
	OR		
	B.2	Place one trip system in trip.	6 hours
C. One or more Functions with RPS trip capability not maintained.	C.1	Restore RPS trip capability.	1 hour
D. Required Action and associated Completion Time of Condition A, B, or C not met.	D.1	Enter the Condition referenced in Table 3.3.1.1-1 for the channel.	Immediately
E. As required by Required Action D.1 and referenced in Table 3.3.1.1-1.	E.1	Reduce THERMAL POWER to < 30% RTP.	4 hours
F. As required by Required Action D.1 and referenced in Table 3.3.1.1-1.	F.1	Be in MODE 2.	6 hours

(continued)

ACTIONS (continued)

CONDITION	REQUIRED ACTION		COMPLETION TIME
G. As required by Required Action D.1 and referenced in Table 3.3.1.1-1.	G.1	Be in MODE 3.	12 hours
H. As required by Required Action D.1 and referenced in Table 3.3.1.1-1.	H.1	Initiate action to fully insert all insertable control rods in core cells containing one or more fuel assemblies.	Immediately
I. As required by Required Action D.1 and referenced in Table 3.3.1.1-1.	I.1	Initiate alternate method to detect and suppress thermal hydraulic instability oscillations.	12 hours
J. Required Action and associated Completion Time of Condition I not met.	J.1	Be in MODE 2	4 hours

Table 3.3.1.1-1 (page 1 of 3)
Reactor Protection System Instrumentation

FUNCTION	APPLICABLE MODES OR OTHER SPECIFIED CONDITIONS	REQUIRED CHANNELS PER TRIP SYSTEM	CONDITIONS REFERENCED FROM REQUIRED ACTION D.1	SURVEILLANCE REQUIREMENTS	ALLOWABLE VALUE
1. Intermediate Range Monitors					
a. Neutron Flux - High	2	3	G	SR 3.3.1.1.1 SR 3.3.1.1.3 SR 3.3.1.1.5 SR 3.3.1.1.6 SR 3.3.1.1.9 SR 3.3.1.1.14	≤ 120/125 divisions of full scale
	5[a]	3	H	SR 3.3.1.1.1 SR 3.3.1.1.4 SR 3.3.1.1.9 SR 3.3.1.1.14	≤ 120/125 divisions of full scale
b. Inop	2	3	G	SR 3.3.1.1.3 SR 3.3.1.1.14	NA
	5[a]	3	H	SR 3.3.1.1.4 SR 3.3.1.1.14	NA
2. Average Power Range Monitors					
a. Neutron Flux - High, (Setdown)	2	3[b]	G	SR 3.3.1.1.1 SR 3.3.1.1.6 SR 3.3.1.1.7 SR 3.3.1.1.13 SR 3.3.1.1.16	≤ 15% RTP
b. Flow Biased Simulated Thermal Power - High	1	3[b]	F	SR 3.3.1.1.1 SR 3.3.1.1.2 SR 3.3.1.1.7 SR 3.3.1.1.13 SR 3.3.1.1.16	≤ 0.66 W + 66% RTP and ≤ 120% RTP[c]
c. Neutron Flux - High	1	3[b]	F	SR 3.3.1.1.1 SR 3.3.1.1.2 SR 3.3.1.1.7 SR 3.3.1.1.13 SR 3.3.1.1.16	≤ 120% RTP

(continued)

(a) With any control rod withdrawn from a core cell containing one or more fuel assemblies.

(b) Each APRM channel provides inputs to both trip systems.

(c) [.66 W + 66% - .66 Δ W] RTP when reset for single loop operation per LCO 3.4.1, "Recirculation Loops Operating."

Figure 1: Screening for SRO-only linked to 10 CFR 55.43(b)(2) (Tech Specs)

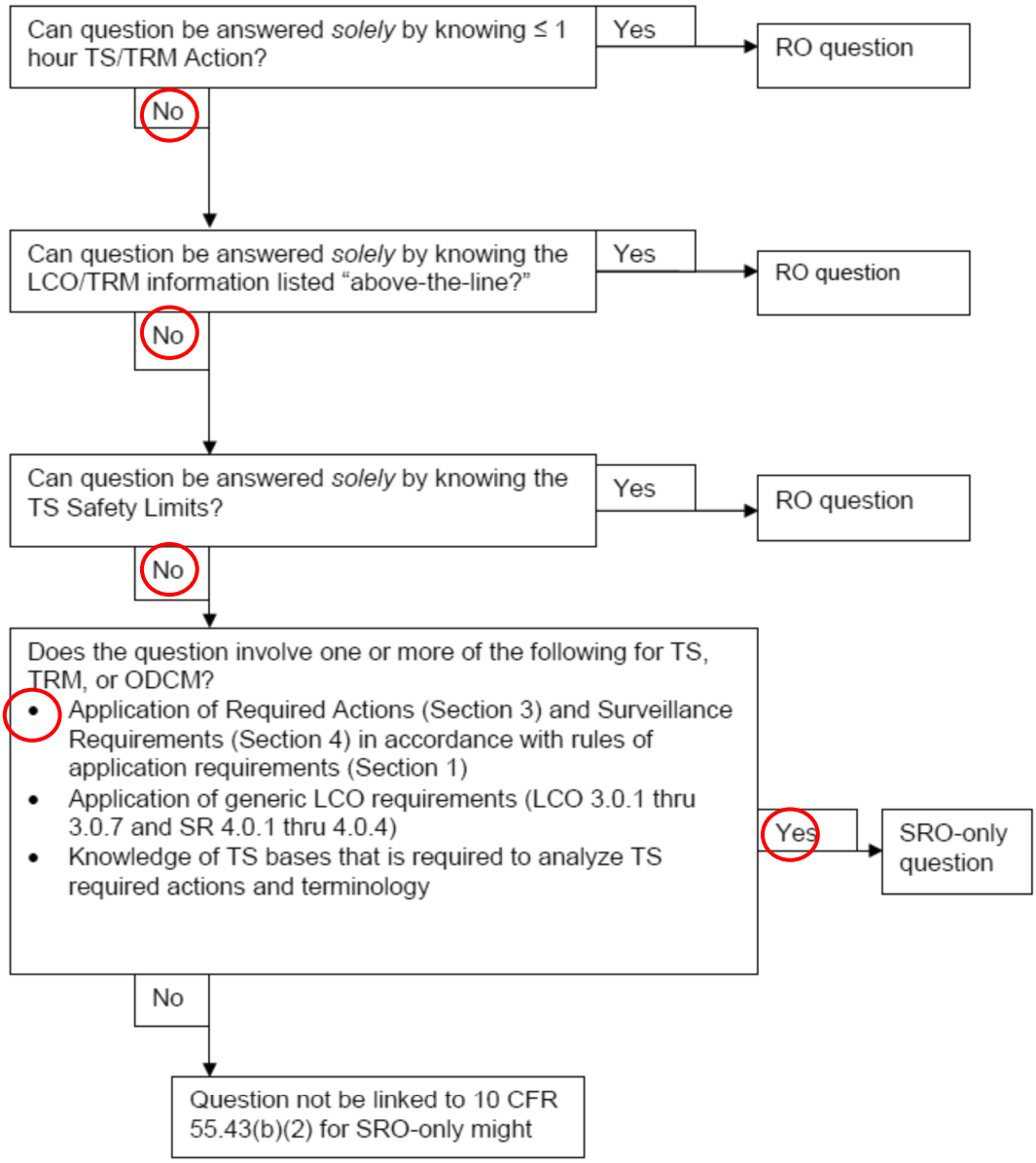

QUESTION 88 Rev 0

All three units are operating at 100% power, when SGT receives an AUTO START signal resulting in the following status:

- 1-9-22B Window 16, SGT Total Flow **Low** is in alarm.

The UO reports:
- All three trains of SGT are running.
- SGT Total system **flow is low** reading approximately 5,000 scfm.

The Reactor Building AUO reports:
- Secondary Containment △P is (-) 0.19 inches of water gauge on all units.

When does the most restrictive Tech Spec Required Action direct that the applicable Unit(s) be placed in MODE 3?

[REFERENCE PROVIDED]

A. 12 hours

B. 13 hours

C. 16 hours

D. 7 days and 12 hours

Answer: B

Examination Outline Cross-Reference	Level:	RO	SRO
	Tier #		2
	Group #		1
	K/A#	261000 A2.01	
	Importance Rating		3.1

SBGT Sys; Ability to (a) predict the impacts of the following on the SBGT SYS; and (b) based on those predictions, use procedures to correct, control, or mitigate the consequences of those abnormal conditions or operations: (CFR: 41.5 / 45.6) Low system flow

Justification for K/A match: This question requires the candidate to evaluate SGT flow and building D/P to determine Operability and the Required Tech Spec actions.

Explanation: Correct B: The conditions given indicate that 3 trains of SGT are not able to lower Secondary Containment △P to ≤ to (-) 0.25 inches of water gauge. Tech Spec bases 3.6.4.3 states that two of the three subsystems can provide design flow conditions. This allows the SGT System to evacuate the entire secondary containment volume to at least a negative 0.25 inches water gauge relative to outside the membrane. Flow being low does not indicate increased in leakage. Secondary containment is operable but SGT system is not Operable. With 2 or more trains of SGT INOP Tech Spec 3.6.4.3 requires entry into LCO 3.0.3. LCO 3.0.3 requires Mode 3 in 13 hours.

A. Incorrect because – Tech Spec 3.0.3 allows 13 hours to be in mode 3.
Plausible if misapplying Tech Spec 3.0.3 and applying the 12 hours to hot shutdown, which is very common when not meeting specified required actions within their required times.

C. Incorrect because – Secondary containment is Operable.
Plausible because – If Secondary Containment is INOP Tech Spec 3.6.4.1 allows 4 hours to restore Secondary Containment and if not restored in 4 hours requires Mode 3 in 12 hours.

D. Incorrect because – More than one Train of SGT is INOP based on total flow.
Plausible because if only one train of SGT is INOP then Tech Spec 3.6.4.3 allows 7 days to restore it to Operable status and if not requires Mode 3 in 12 hours.

Technical Reference(s): Tech Spec 3.6.4.3 and 3.6.4.1, 1-ARP-9-22B Rev 17

Proposed references to be provided to applicants during examination: **Tech Spec 3.6.4.3 and 3.6.4.1**

Learning Objective (As available): OPL 171.018 Rev 10 OBJ 12

Question Source:	Bank: Modified Bank: New: X
Question History:	Previous NRC: None
Question Cognitive Level:	Memory or Fundamental Knowledge Comprehension or Analysis X
10 CFR Part 55 Content:	43(b)(2)

SGT TOTAL FLOW LOW 0-FA-65-50 16	Sensor/Trip Point: FT-65-71 FT-65-50	Auto start signal present and flow less than 8000 SCFM

(Page 1 of 1)

Sensor Location:	FT-65-71 Panel 25-273 Stack, EL 580.5'	FT-65-50 Panel 25-272 Stack, EL 580.5'

Probable Cause:

A. Dirty filter(s)
B. Misalignment of damper(s)

Automatic Action:

A. None

Operator Action:

A. **CHECK** SGTS-1(2) FLOW TO STACK, 0-FI-65-50(71)B/1, Panel 1-9-20.

B. **COMPARE** indications:
1. SGTS FILTER BANK A DIFF PRESS, 0-PDI-65-5, Panel 1-9-25
2. SGTS FILTER BANK B DIFF PRESS, 0-PDI-65-27, Panel 1-9-25
3. SGT FLT BK C PRESS DIFF, 0-PDI-65-53, Panel 2-9-25

C. **VERIFY** two trains operating and **START** third train. **REFER TO** 0-OI-65.

D. **VERIFY** damper alignment. **REFER TO** 0-OI-65.

E. **DISPATCH** Personnel to SGT Building to **CHECK** individual filter DPs.

F. **REFER TO** Technical Specifications 3.1.1, 3.6.4.3, TRM 3.3.2

REACTOR ZONE DIFFERENTIAL PRESSURE LOW 1-PDA-64-27	32

(Page 1 of 1)

Sensor/Trip Point:

1-PDS-064-0027 -0.17 in of water

Sensor Location: 1-LPNL-925-0213
Reactor Bldg El. 639

Probable Cause:

A. Securing/Alternating Refuel Zone Fans.
B. Trip of any Rx Bldg Zone Exh. Fan.
C. PCIS Group 6 Isolation.
D. Differential Pressure switches fail closed.
E. Rapidly changing barometric pressure or high winds.
F. Normal ventilation in service with Standby Gas Treatment System running at the same time.
G. High energy line break in Secondary Containment.

Automatic Action: Annunciation only

Operator Action:

A. **IF** the alarm is intermittent, **THEN**
CHECK for high wind conditions (ex., > 20 mph) on ICS. ☐
B. **IF** high wind conditions **CANNOT** be confirmed, **THEN**
REQUEST personnel check Bldg ΔP locally. ☐
C. **IF** alarm is due to high wind conditions, **THEN**
ENTRY into 1-EOI-3 is **NOT** required. ☐
D. **IF** alarm is valid, **THEN**
INFORM Unit Supervisor of 1-EOI-3. ☐
E. **REQUEST** personnel check fans locally for any apparent problems. ☐
F. **REFER TO** 1-OI-30B and **PLACE** standby fan in service to restore normal ΔP. ☐

3.6 CONTAINMENT SYSTEMS

3.6.4.3 Standby Gas Treatment (SGT) System

LCO 3.6.4.3 Three SGT subsystems shall be OPERABLE.

APPLICABILITY: MODES 1, 2, and 3,
During operations with a potential for draining the reactor vessel (OPDRVs).

ACTIONS

CONDITION	REQUIRED ACTION	COMPLETION TIME
A. One SGT subsystem inoperable.	A.1 Restore SGT subsystem to OPERABLE status.	7 days
B. Required Action and associated Completion Time of Condition A not met in MODE 1, 2, or 3.	B.1 Be in MODE 3. AND B.2 Be in MODE 4.	12 hours 36 hours

(continued)

ACTIONS (continued)

CONDITION	REQUIRED ACTION	COMPLETION TIME
C. Required Action and associated Completion Time of Condition A not met during OPDRVs.	C.1 Place two OPERABLE SGT subsystems in operation. OR C.2 Initiate action to suspend OPDRVs.	Immediately Immediately
D. Two or three SGT subsystems inoperable in MODE 1, 2, or 3.	D.1 Enter LCO 3.0.3.	Immediately

(continued)

BASES
BACKGROUND

The sizing of the SGT System equipment and components is (continued) based on the results of an infiltration analysis. The internal pressure of the SGT System boundary region is maintained at a negative pressure of 0.25 inches water gauge when the system is in operation. The Secondary Containment membrane limits infiltration to not more than the design flow requirements for the SGT System under neutral (< 5 mph) wind conditions. This allows the SGT System to evacuate the entire secondary containment volume to at least a negative 0.25 inches water gauge relative to outside the membrane.

The SGT System automatically starts and operates in response to actuation signals indicative of conditions or an accident that could require operation of the system. Following initiation, the three charcoal filter train fans start and run until manually stopped. Two of the three subsystems can provide design flow conditions.

LCO 3.0.3 When an LCO is not met and the associated ACTIONS are not met, an associated ACTION is not provided, or if directed by the associated ACTIONS, the unit shall be placed in a MODE or other specified condition in which the LCO is not applicable. Action shall be initiated within 1 hour to place the unit, as applicable, in:

a. MODE 2 within 10 hours;
b. MODE 3 within 13 hours; and
c. MODE 4 within 37 hours.

1. Purpose of the SGT

   a. To maintain a small negative pressure (-.25" H2O VAC with an in-leakage flow of 12000 cfm) in the Reactor Building under isolation conditions to prevent ground-level release of airborne activity

F. Technical Specifications & TRM

1. Section 3.3.6.2 contains the initiation instrumentation requirements
2. Section 3.6.4.3 identifies the SGT operability and surveillance requirements
3. Section 3.6.4.1 Secondary Containment SR 3.6.4.1.3 and 3.6.4.1.4 includes requirements for SGT operability
4. Section 3.8 power supply requirements Discuss how DG operability affects SGT

3.6 CONTAINMENT SYSTEMS

3.6.4.1 Secondary Containment

LCO 3.6.4.1 The secondary containment shall be OPERABLE.

APPLICABILITY: MODES 1, 2, and 3,
During operations with a potential for draining the reactor vessel (OPDRVs).

ACTIONS

CONDITION	REQUIRED ACTION	COMPLETION TIME
A. Secondary containment inoperable in MODE 1, 2, or 3.	A.1 Restore secondary containment to OPERABLE status.	4 hours
B. Required Action and associated Completion Time of Condition A not met.	B.1 Be in MODE 3. AND B.2 Be in MODE 4.	12 hours 36 hours

(continued)

BASES
BACKGROUND

The function of the secondary containment is to contain, dilute, and hold up fission products that may leak from primary containment following a Design Basis Accident (DBA) (Ref. 1). In conjunction with operation of the Standby Gas Treatment (SGT) System and closure of certain valves whose lines penetrate the secondary containment, the secondary containment is designed to reduce the activity level of the fission products prior to release to the environment and to isolate and contain fission products that are released during certain operations that take place inside primary containment, when primary containment is not required to be OPERABLE, or that take place outside primary containment.

The secondary containment is a structure that completely encloses the primary containment and those components that may be postulated to contain primary system fluid. This structure forms a control volume that serves to hold up and dilute the fission products. It is possible for the pressure in the control volume to rise relative to the environmental pressure (e.g., due to pump and motor heat load additions). To prevent ground level exfiltration while allowing the secondary containment to be designed as a conventional structure, the secondary containment requires support systems to maintain the control volume pressure at less than the external pressure following a DBA. Requirements for these systems are specified separately in LCO 3.6.4.2, "Secondary Containment Isolation Valves (SCIVs)," and LCO 3.6.4.3, "Standby Gas Treatment (SGT) System."

LCO

An OPERABLE secondary containment provides a control volume into which fission products that bypass or leak from primary containment, or are released from the reactor coolant pressure boundary components located in secondary containment, can be diluted and processed prior to release to the environment. For the secondary containment to be considered OPERABLE, it must have adequate leak tightness to ensure that the required vacuum can be established and maintained.

QUESTION 89 Rev 0

All three units are operating at 100% power.

0-SR-3.8.1.1(A) Diesel Generator A Monthly Operability test is in progress.
The A Diesel Generator has been loaded to 2400 KW and 1800 kVAR.

Subsequently:

All off-site power is lost.

Which one of the following completes the statements below?

When off-site power is lost the A Diesel Generator output breaker will __ (1) __.

If Suppression Pool Cooling is required by EOI-2 __ (2) __ dictates the order in which pumps are to be started to place Suppression Pool Cooling in service.

A. (1) remain closed
   (2) Appendix 17A

B. (1) trip and then reclose
   (2) Appendix 17A

C. (1) remain closed
   (2) 0-AOI-57-1A

D. (1) trip and then reclose
   (2) 0-AOI-57-1A

Answer: C

Examination Outline Cross-Reference	Level:	RO	SRO
	Tier #		2
	Group #		1
	K/A#	264000 A2.07	
	Importance Rating		3.7

Emergency Generators; Ability to (a) predict the impacts of the following on the EMERGENCY GENERATORS (DIESEL/JET) ; and (b) based on those predictions, use procedures to correct, control, or mitigate the consequences of those abnormal conditions or operations: (CFR: 41.5 / 45.6) Loss of off-site power during full-load testing

Justification for K/A match: This is a Tier 2 Systems K/A concerning the Emergency Generators so to match the A2 K/A for a loss of offsite power during full-load testing, the question was written to ask if being tested, and a loss of off-site power occurs, what will the system do and which procedure will provide the mitigating actions.

Explanation: Correct C: Without an accident signal present the A D/G output breaker will not trip when off-site power is lost. 0-AOI-57-1A note on page 19 states: Due to the configuration of the plants, it may be necessary to place containment cooling in service with RHR pumps running prior to the RHR Service water pumps. OI-74 and EOI-2 sequence these loads in a different order. The caution on page 73 states: Failure to trip all 4kV motors (except G Control Air Compressor) prior to starting a RHR pump on a 4kV Shutdown board where the D/G is the only source of power could result in equipment failure.

A. Incorrect – Plausible in that part 1 is correct and Appendix 17A is the correct procedure for placing SPC in service however, 0-AOI-57-1A directs starting the RHR pump prior to starting RHRSW pumps. Note: The terminology used in Appendix-17A allows this exception to the normal order of pump starts.

B. Incorrect – Plausible in that part 1 would be correct if an accident signal was present and Appendix-17A is the correct procedure for placing SPC in service however, 0-AOI-57-1A directs starting the RHR pump prior to starting RHRSW pumps.

D. Incorrect – Plausible Part 1 see B above. Part 2 is correct.

Technical Reference(s): 0-OI-82 Rev 154, 0-AOI-57-1A Rev 100, 1-EOI-Appendix 17A Rev 2

Proposed references to be provided to applicants during examination: None

Learning Objective (As available): OPL 171.036 Rev 15 OBJ 8

Question Source:	Bank: Modified Bank: New: X
Question History:	Previous NRC: N/A
Question Cognitive Level:	Memory or Fundamental Knowledge Comprehension or Analysis X
10 CFR Part 55 Content:	43(b)(5)

4.2 Subsequent Actions (continued)

NOTES

3) Due to the configuration of the plants, it may be necessary to place containment cooling in service with RHR pumps running prior to the RHR Service water pumps. OI-74 and EOI-2 sequence these loads in a different order.

Attachment 6
(Page 1 of 1)

Diesel Generator Load Limitations

CAUTIONS

3) Failure to trip all 4kV motors (except G Control Air Compressor) prior to starting a RHR pump on a 4kV Shutdown board where the D/G is the only source of power could result in equipment failure. **REFER TO** Attachment 4 for associated loads.

2. **PLACE** RHR SYSTEM I(II) in Suppression Pool Cooling as follows:
   a. **VERIFY** at least one RHRSW pump supplying each EECW header.
   b. **VERIFY** RHRSW pump supplying desired RHR Heat Exchanger(s).
   c. **THROTTLE** the following in-service RHRSW outlet valves to obtain between 1350 and 4500 gpm RHRSW flow:
      - 1-FCV-23-34, RHR HX 1A RHRSW OUTLET VLV
      - 1-FCV-23-46, RHR HX 1B RHRSW OUTLET VLV
      - 1-FCV-23-40, RHR HX 1C RHRSW OUTLET VLV
      - 1-FCV-23-52, RHR HX 1D RHRSW OUTLET VLV.
   g. **OPEN** 1-FCV-74-57(71), RHR SYS I(II) SUPPR CHBR/POOL ISOL VLV.
   h. **VERIFY** desired RHR pump(s) for Suppression Pool Cooling are operating.

5.0 STARTUP

5.1 Automatic Start

[1] **IF** the Diesel Generators started as a result of an accident signal **AND** a degraded/undervoltage condition does **NOT** exist on the 4-kV shutdown boards, **THEN PERFORM** the following:

[1.1] **VERIFY** all operable Diesel Generators start in single unit mode and D/G output breaker trips if previously closed.

[2] **IF** the Diesel Generator(s) started as a result of an accident signal **AND** a degraded/undervoltage condition **does** exist on the 4-kV shutdown boards, **THEN PERFORM** the following:

[2.1] **VERIFY** all operable Diesel Generators start.

[2.2] **IF** an operable Diesel Generator fails to start, **THEN PERFORM** a manual fast start using this instruction.

[2.3] **VERIFY** the associated 4-kV shutdown board feeder breakers open.

[2.4] **VERIFY** the associated Diesel Generator output breakers close.

3.0 PRECAUTIONS AND LIMITATIONS (continued)

T. Diesel Generators will automatically start, as follows:

1. Degraded voltage or undervoltage on 4-kV Shutdown Board A, B, C, or D will start its associated Diesel Generator.
2. A Pre-Accident Signal (Reactor Vessel Low Low Low water level OR High Drywell pressure) on Unit 1, Unit 2 or Unit 3 will start all eight Diesel Generators.

W. Following an initiation of a Common Accident Signal (which trips the diesel breakers), a second diesel breaker trip on a “unit priority” basis is provided to ensure that the diesel supplied S/D Boards are stripped prior to starting the RHR pumps and other ECCS loads.

.

4.2 Subsequent Actions (continued)

NOTE

Control Air Compressor 'G' (fed from 4kV Shutdown Board B) is not required to be tripped when performing Step 4.2[15].

CAUTIONS

1) In the following step, failure to trip all 4kV motors (except 'G' Control Air Compressor) feeding from the associated Shutdown Board could result in equipment failure [NRC/C].
2) Receiving an ECCS initiation signal concurrent with an RHR loop being in Suppression Pool Cooling AND a Loss of Offsite Power will fail that loop due to a water hammer.

[15] **IF** the diesel generator is the only source of power to the 4kV Shutdown Board **AND** the associated RHR Pump is required to be restarted after autoload sequencing has taken place,
THEN PERFORM the following: (Otherwise N/A)

[15.1] **TRIP** ALL 4kV motors feeding from the associated Shutdown Board. **REFER TO** Attachment 4.

[15.2] **EVALUATE** the need to secure running Drywell Blowers and RBCCW pumps feeding from associated 480V Shutdown Board (Attachment 4) as required to maintain diesel generator loading limits. (Attachment 6)

[15.3] **RESTART** the required RHR Pump.

[15.4] **SEQUENCE** the remaining 4kV loads back to the 4kV Shutdown Board while monitoring Diesel Generator Loading.

QUESTION 90 Rev 2

Unit 2 is operating at 100% power.

IMs are performing 2-SR-3.3.1.1.8(7B/CD), RPS High Water Level in Scram Discharge Tank Functional Test (2-LS-85-45C & 2-LS-85-45D).

- 0130 The IMs removed 2-LS-85-45C, West CRD SCRAM Discharge volume SCRAM Trip, from service in accordance with 2-SR-3.3.1.1.8(7B/CD).

- 0330 The IMs report that 2-LS-85-45C failed acceptance criteria and will need to be replaced.

[REFERENCE PROVIDED]

Which ONE of the following completes the statements below?

When the IMs removed 2-LS-85-45C from service at 0130 the US __ (1) __ required to enter the associated CONDITION and REQUIRED ACTIONS of Tech Spec.

In accordance with Tech Spec 3.3.1.1 the channel or associated trip system is **required** to be placed in Trip by __ (2) __ the same day if 2-LS-85-45C remains inoperable.

A. (1) is
   (2) 1530

B. (1) is
   (2) 1930

C. (1) is NOT
   (2) 1530

D. (1) is NOT
   (2) 1930

Answer: C

Examination Outline Cross-Reference	Level:	RO	SRO
	Tier #		2
	Group #		1
	K/A#	212000 A2.14	
	Importance Rating		4.0

Ability to (a) predict the impacts of the following on the RPS; and (b) based on these predictions, use procedures to correct, control, or mitigate the consequences of these abnormal conditions or operations. High SCRAM instrument volume water level.

Justification for K/A match: This is a Tier 2 Systems K/A concerning RPS which is tied to an A2 statement to predict the impact of high water level in the SDV on RPS and use procedure to correct, control or mitigate the consequences. To satisfy the SRO requirement the question asks the SRO to determine when the Required Actions of Tech Spec is required to be entered and when the channel of RPS is required to be tripped.

Explanation: CORRECT C: Tech Spec Surveillance Requirements NOTE 2 allows the instrument to be out of service for up to six hours for testing without entering into the associated Conditions or Required actions. The required actions would be entered at 0330 requiring a Trip to be inserted by 1530.

A. **Incorrect because –** Tech Spec Surveillance Requirements note 2 allows delaying entry into the associated Conditions or Required actions for up to six hours for testing as long as RPS trip capability is maintained.
Plausible because – This would be correct if Tech Spec Surveillance Requirements NOTE 2 **Did** not apply and this note does not apply to all instrumentation.

B. **Incorrect because –** Part 1 see A above and because Condition A is entered at 0330 which requires inserting a trip at 1530.
Plausible because – This would be a misapplication of Tech Spec Surveillance Requirements Note 2(0130+6 hours +12 hours= 1930)

D. **Incorrect because –** Tech Spec 3.3.1.1 Condition A is entered at 0330 which requires inserting a trip in the RPS channel by 1530.
Plausible because – Part 1is correct and Part 2 is a misapplication of Tech Spec Surveillance Requirements Note 2(0130+6 hours +12 hours= 1930)

Technical Reference(s): 2-OI-99 Rev 82; 730E915 sheet 9 and 11; 2-ARP-9-4A Rev 41

Proposed references to be provided to applicants during examination:
TS 3.3.1.1 including Table 3.3.1.1-1

Learning Objective (As available): OPL171.028 Rev 19 ILT objective 19 and 20

Question Source:	Bank: Modified Bank: X New:
Question History:	Previous NRC: N/A
Question Cognitive Level:	Memory or Fundamental Knowledge Comprehension or Analysis: X
10 CFR Part 55 Content:	43(b)(2)

3.3 INSTRUMENTATION

3.3.1.1 Reactor Protection System (RPS) Instrumentation

LCO 3.3.1.1 The RPS instrumentation for each Function in Table 3.3.1.1-1 shall be OPERABLE.

APPLICABILITY: According to Table 3.3.1.1-1.

ACTIONS

----------NOTE----------
Separate Condition entry is allowed for each channel.

CONDITION	REQUIRED ACTION	COMPLETION TIME
A. One or more required channels inoperable.	A.1 Place channel in trip.	12 hours
	OR	
	A.2 ----------NOTE---------- Not applicable for Functions 2.a, 2.b, 2.c, 2.d, or 2.f. ---------- Place associated trip system in trip.	12 hours

(continued)

SURVEILLANCE REQUIREMENTS

----------NOTES----------

1. Refer to Table 3.3.1.1-1 to determine which SRs apply for each RPS Function.

2. When a channel is placed in an inoperable status solely for performance of required Surveillances, entry into associated Conditions and Required Actions may be delayed for up to 6 hours provided the associated Function maintains RPS trip capability.

Table 3.3.1.1-1 (page 2 of 3)
Reactor Protection System Instrumentation

7. Scram Discharge Volume Water Level - High					
a. Resistance Temperature Detector	1,2	2	G	SR 3.3.1.1.8 SR 3.3.1.1.13 SR 3.3.1.1.14	≤ 50 gallons
7. Scram Discharge Volume Water Level - High (continued)					
b. Float Switch	1,2	2	G	SR 3.3.1.1.8 SR 3.3.1.1.13 SR 3.3.1.1.14	≤ 46 gallons

BFN 1501 Q 34

While performing 1-SR-3.3.1.1.8(7A/A), RPS And Rod Block High Water Level in Scram Discharge Tank Functional Test (1-LS-85-45A & 1-LS-85-45L), the IMs identified that:

- 1-RLY-099-05AK01A, RPS CH A1 WEST CRD SCRAM DISCH VOL HI WTR LVL, did not de-energize as expected when level switch 1-LS-85-45A, SDV HIGH LEVEL A1 Channel, Resistance Temperature Detector was tested.

- A Tag Out has been prepared to tag 1-FU1-85-45AA in accordance with 1-OI-99 Illustration 3 to allow the level switch replacement.

Which one of the following completes the statements below?

Prior to the fuse removal, if a valid high SDV water level occurs in the West SDV, a trip of the 'A' RPS trip system, __ (1) __ occur.

Following replacement of 1-LS-85-45A and when fuse 1-FU1-85-45AA is replaced, the RPS half scram can be reset __ (2) __.

A. (1) can Not
   (2) immediately

B. (1) can Not
   (2) after 37 seconds

C. (1) can still
   (2) immediately

D. (1) can still
   (2) after 37 seconds

Answer: D

Figure 2: Screening for SRO-only linked to 10 CFR 55.43(b)(5) (Assessment and selection of procedures)

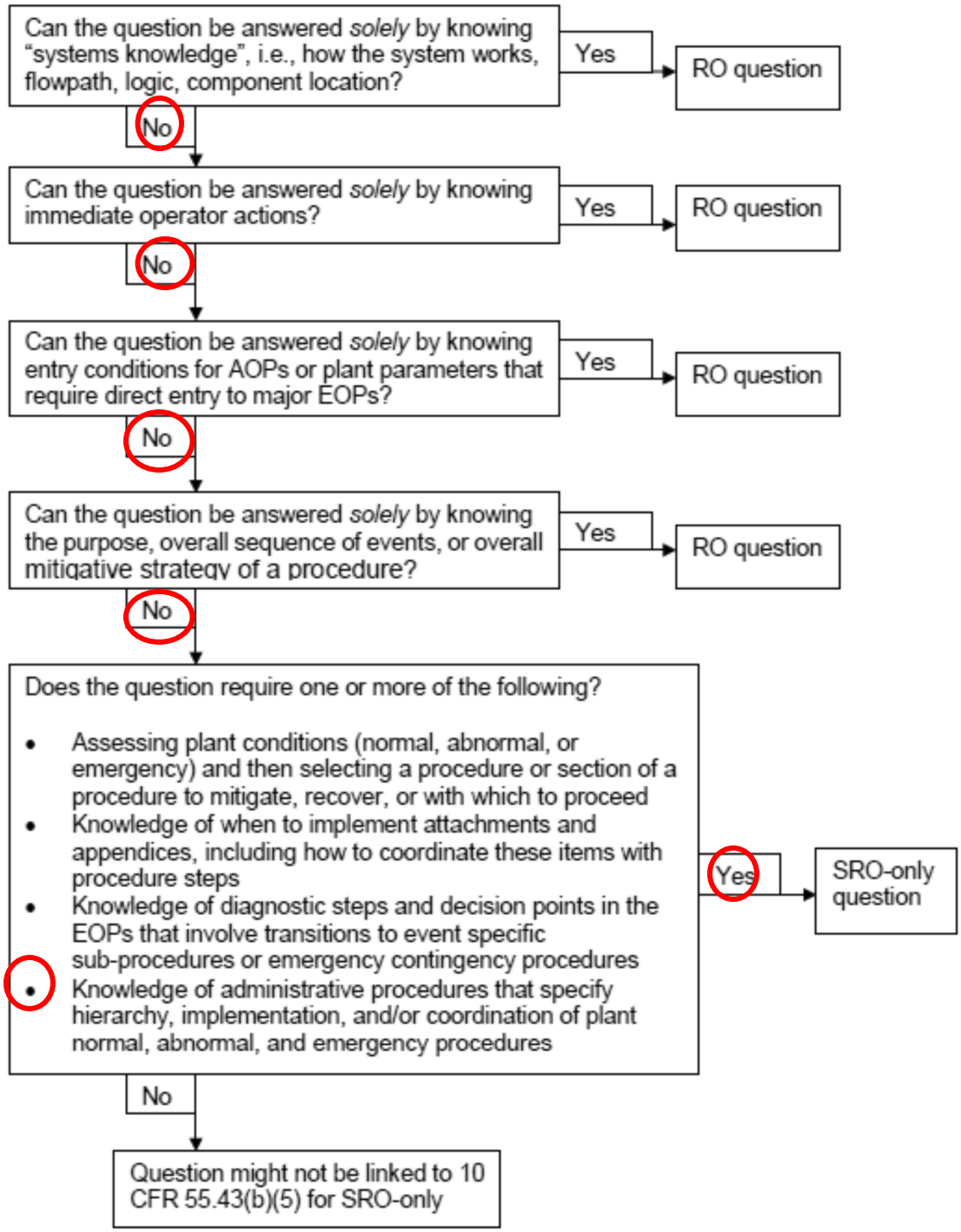

QUESTION 91 Rev 2

Unit 1 Rx Startup following a refueling outage is in progress with the following conditions:

- Reactor Mode Switch is in the Startup position
- The US has directed aligning RCIC and HPCI to standby Readiness.
- The UO is currently warming the RCIC steam lines.
- Control Rod 18-23 has been declared SLOW

Subsequently:

The amber Control Rod Scram accumulator light for Control Rod 22-23 which is at position 48 illuminated.

The Reactor building AUO damaged the threads on nitrogen charging connection fitting while removing the Nitrogen charging connection and was not able to re-install the cap.

The AUO opened RT VLV TO PI-85-34, 2-RTV-085-229A (star valve) and called the Control Room for assistance.

ASSUME NO OTHER ACTIONS HAVE BEEN TAKEN.

Which one of the following completes the statements below?

The US is required to enter Tech Spec 3.1.5 _____.

[REFERENCE PROVIDED]

A. CONDITION A only

B. CONDITION A and 3.1.4 CONDITION A

C. CONDITION C only

D. CONDITION C and 3.1.3 CONDITION C

Answer: D

Examination Outline Cross-Reference	Level:	RO	SRO
	Tier #		2
	Group #		2
	K/A#	201001 A2.11	
	Importance Rating	2.6	2.7

201001 Control Rod Drive Hydraulic System: A2.11 Ability to (a) predict the impacts of the following on the CONTROL ROD DRIVE HYDRAULIC SYSTEM ; and (b) based on those predictions, use procedures to correct, control, or mitigate the consequences of those abnormal conditions or operations: Valve openings (CFR: 41.5 / 45.6)

Justification for K/A match: The question asks the candidate to predict the affect of opening the star valve without installing the Nitrogen charging connection cap and determine the actions required by Tech Spec satisfying both aspects of the K/A at the SRO level.

Explanation CORRECT D: Based on the stem of the question it can be determined that Reactor pressure is less than 900 psig. With 1 scram accumulator INOP (less than 940 psig) Tech Spec 3.1.5 condition C is entered and required action C.2 directs declaring the associated Control Rod INOP. With the Control Rod INOP Tech Spec 3.1.3 Condition C is required to be entered.

A. **Incorrect because** – Because Reactor Pressure is less than 900 psig.
Plausible because – Reactor Pressure is not given directly in the stem of the question and because Condition A is correct with Reactor Pressure above 900 psig.

B. **Incorrect because** – Tech Spec 3.1.4 is not required to be entered because the Control Rod is INOP not SLOW.
Plausible because – With low Reactor Pressure and a depressurized accumulator the Control Rod Scram time will be affected. Additionally the two Control Rods in the stem are adjacent control rods.

C. **Incorrect because** – Tech Spec 3.1.3 Condition C is also required to be entered.
Plausible because – Tech Spec 3.1.5 Condition C directs declaring the Control Rod INOP but does not direct entering Tech Spec 3.1.3.

Technical Reference(s): LCO 3.1.3, 3.1.4, and 3.1.5 Amendment No. 234,
1-OI-85 Rev 40

Proposed references to be provided to applicants during examination: LCO 3.1.3, 3.1.4, and 3.1.5

Learning Objective (As available): OPL 171.

Question Source:	Bank: Modified Bank: New: X
Question History:	Previous NRC: N/A
Question Cognitive Level:	Memory or Fundamental Knowledge: Comprehension or Analysis: X
10 CFR Part 55 Content:	43b(2)

3.1 REACTIVITY CONTROL SYSTEMS

3.1.5 Control Rod Scram Accumulators

LCO 3.1.5 Each control rod scram accumulator shall be OPERABLE.

APPLICABILITY: MODES 1 and 2.

ACTIONS

----------NOTE----------
Separate Condition entry is allowed for each control rod scram accumulator.

CONDITION	REQUIRED ACTION	COMPLETION TIME
A. One control rod scram accumulator inoperable with reactor steam dome pressure ≥ 900 psig.	A.1 ----------NOTE---------- Only applicable if the associated control rod scram time was within the limits of Table 3.1.4-1 during the last scram time Surveillance. ---------- Declare the associated control rod scram time "slow."	8 hours
	OR	
	A.2 Declare the associated control rod inoperable.	8 hours

(continued)

ACTIONS (continued)

CONDITION	REQUIRED ACTION	COMPLETION TIME
C. One or more control rod scram accumulators inoperable with reactor steam dome pressure < 900 psig.	C.1 Verify all control rods associated with inoperable accumulators are fully inserted.	Immediately upon discovery of charging water header pressure < 940 psig
	AND	
	C.2 Declare the associated control rod inoperable.	1 hour
D. Required Action and associated Completion Time of Required Action B.1 or C.1 not met.	D.1 ----------NOTE---------- Not applicable if all inoperable control rod scram accumulators are associated with fully inserted control rods. ----------	
	Place the reactor mode switch in the shutdown position.	Immediately

ACTIONS

CONDITION	REQUIRED ACTION	COMPLETION TIME
A. (continued)	A.3 Perform SR 3.1.3.3 for each withdrawn OPERABLE control rod.	24 hours from discovery of Condition A concurrent with THERMAL POWER greater than the low power setpoint (LPSP) of the RWM
	AND	
	A.4 Perform SR 3.1.1.1.	72 hours
B. Two or more withdrawn control rods stuck.	B.1 Be in MODE 3.	12 hours
C. One or more control rods inoperable for reasons other than Condition A or B.	C.1 ----------NOTE---------- RWM may be bypassed as allowed by LCO 3.3.2.1, if required, to allow insertion of inoperable control rod and continued operation. ----------	
	Fully insert inoperable control rod.	3 hours
	AND	
	C.2 Disarm the associated CRD.	4 hours

(continued)

3.1 REACTIVITY CONTROL SYSTEMS

3.1.4 Control Rod Scram Times

LCO 3.1.4

a. No more than 13 OPERABLE control rods shall be "slow," in accordance with Table 3.1.4-1; and

b. No more than 2 OPERABLE control rods that are "slow" shall occupy adjacent locations.

APPLICABILITY: MODES 1 and 2.

ACTIONS

CONDITION	REQUIRED ACTION	COMPLETION TIME
A. Requirements of the LCO not met.	A.1 Be in MODE 3.	12 hours

8.4 Recharging Hydraulic Control Unit Accumulators (continued)

[5] **RECORD** Control Rod coordinates and the initial HCU accumulator pressure in the Narrative Log. ☐

NOTE

If accumulator pressure is greater than 940 psig the accumulator is not required to be declared Inoperable when ROOT VLV TO PI-85-34, 1-RTV-085-229A is CLOSED, unless accumulator is unattended.

[6] **IF** accumulator pressure is less than 940 psig, **THEN**

EVALUATE Tech Specs 3.1.3, 3.1.4, 3.1.5 (Tech Specs 3.9.5, 3.10.3, 3.10.4, 3.10.5 if Reactor is in MODE 3, 4 or 5) for applicability and **RECORD** in Narrative Log if **NOT** previously performed. (Reference P&L 3.3 I) ☐

Figure 1: Screening for SRO-only linked to 10 CFR 55.43(b)(2) (Tech Specs)

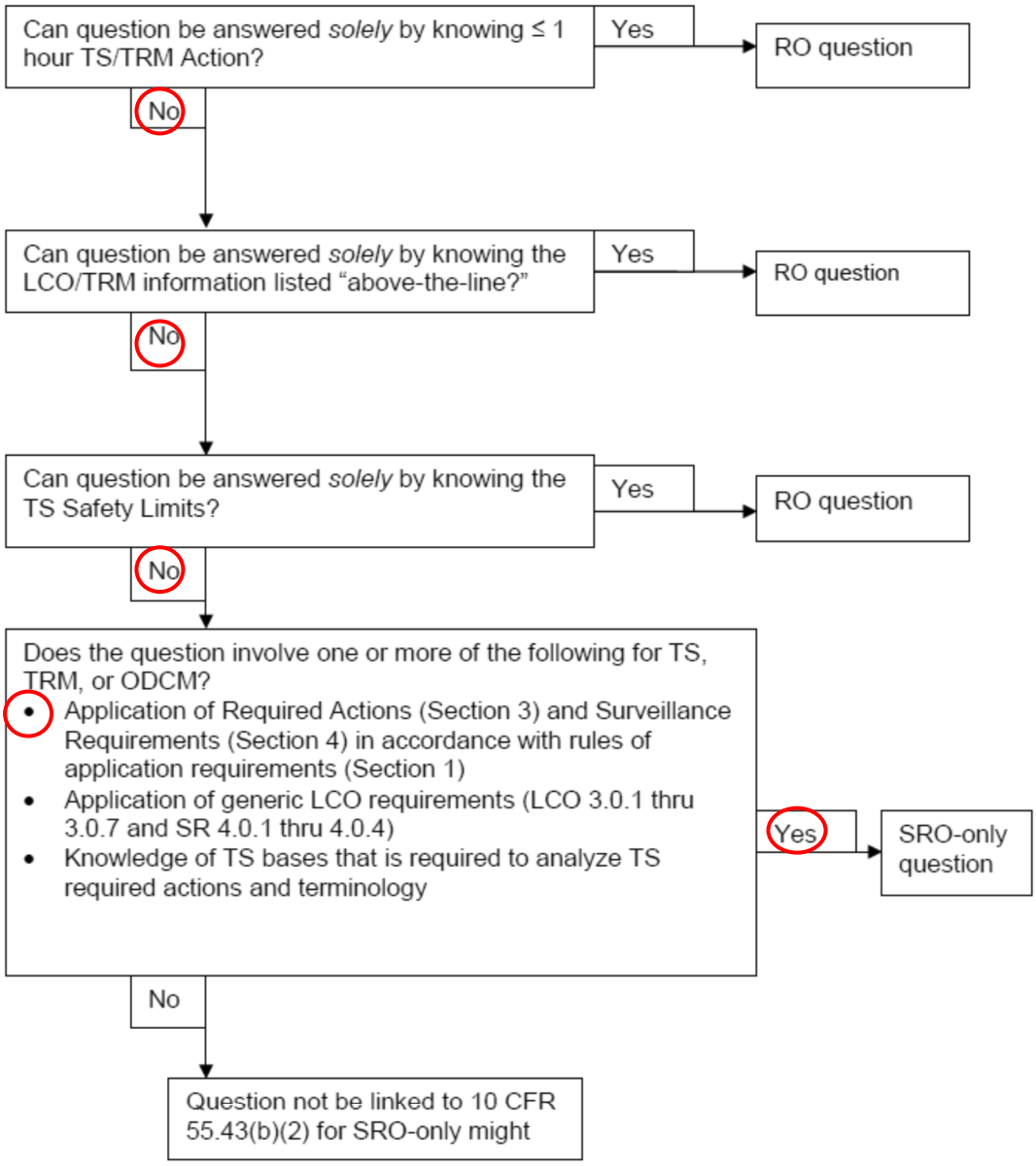

QUESTION 92 Rev 0

Unit 2 is at 100% power.

2-9-5A window 17 CONTROL ROD DRIVE UNIT TEMP HIGH is in alarm.
The UO reports that 5 Control Rod Drives are in alarm on the CRD Temperature Recorders.

Which one of the following completes the statements below?

The setpoint for the CONTROL ROD DRIVE UNIT TEMP HIGH is __ (1) __.

If the Control Rod Drive temperature remains above the alarm setpoint after completion of the ARP actions the US is required to determine if Tech Spec section __ (2) __ is met.

[REFERENCE PROVIDED]

A. (1) 240 °F
   (2) 3.1.3 Control Rod Operability

B. (1) 240 °F
   (2) 3.1.4 Control Rod Scram Time

C. (1) 350 °F
   (2) 3.1.3 Control Rod Operability

D. (1) 350 °F
   (2) 3.1.4 Control Rod Scram Time

Answer: D

Examination Outline Cross-Reference	Level:	RO	SRO
	Tier #		2
	Group #		2
	K/A#	201003 A2.05	
	Importance Rating	4.1	4.1

201003 Control Rod and Drive Mechanism: A2.05 Ability to (a) predict the impacts of the following on the CONTROL ROD AND DRIVE MECHANISM ; and (b) based on those predictions, use procedures to correct, control, or mitigate the consequences of those abnormal conditions or operations: Reactor Scram (CFR: 41.5 / 45.6)

Justification for K/A match: This is a Tier 2 Systems K/A concerning the CRDMs and the ability to predict the impacts of a reactor scram on the CRDM. The rod was given a high temperature condition and the SRO must deduce which Tech Spec covers this situation.

Explanation: **CORRECT D:** IAW 2-ARP-9-5A window 17 the setpoint for CRD Temp High is 350°F. Tech Spec bases section 3.1.4 directs declaring the Control Rod slow if the CRDM Temp ≥350°F unless an Engineering evaluation. The Control Rod is not required to be declared INOP based on CRDM Temperature. The US must determine if Tech Spec 3.1.4 is met.

A. Incorrect – Part 1 is plausible because the ICS temperature high alarm is 240°F. This is indicated on the ICS alarm printer/screen and the ICS screen will turn yellow. Part 2 is plausible because IAW Tech Spec bases the Operability of a Control Rod is based in part on Scram time. Tech Spec table 3.1.4-1 includes a note that states: “Enter applicable Conditions and Required Actions of LCO 3.1.3, "Control Rod OPERABILITY," for control rods with scram times > 7 seconds to notch position 06” however this is not known unless scram time testing is performed.

B. Incorrect – Part 1 is plausible see A above. Part 2 is correct.

C. Incorrect – Part 1 is correct. Part 2 is plausible see A above.

Technical Reference(s): 2-ARP-9-5A R52, Tech Spec Amendment No. 253,
Tech Spec Bases R9

Proposed references to be provided to applicants during examination:
Tech Spec 3.1.3 and 3.1.4

Learning Objective (As available): OPL 171.006 R 10 OBJ 18 and 22

Question Source:	Bank: Modified Bank: X New:
Question History:	Previous NRC: 1501 Q 91
Question Cognitive Level:	Memory or Fundamental Knowledge Comprehension or Analysis: X
10 CFR Part 55 Content:	43(b)(2)

CONTROL ROD DRIVE UNIT TEMP HIGH 2-TA-85-7	17

(Page 1 of 2)

Sensor/Trip Point:

TE-85-7 (1 thru 185) 350°F — Alarm comes from recorders, 2-TR-85-7A & 2-TR-85-7A1
2-TR-85-7B & 2-TR-85-7B1

Sensor Location: Located on each control rod drive.

Probable Cause:
A. Insufficient cooling water flow.
B. Malfunction of sensor.
C. Leaking scram discharge valve.
D. Plugged CRD cooling water orifice.

Automatic Action: None

Operator Action:

A. **VALIDATE** high temp of CRD on recorder 2-TR-85-7A, 2-TR-85-7A1, 2-TR-85-7B, & 2-TR-85-7B1 (Panel 2-9-47) or on ICS. ☐

B. **IF** alarm is valid, **THEN** perform the following as directed by the Unit Supervisor: ☐

- **CHECK** cooling water pressure and flow normal on Panel 2-9-5. ☐
- **DISPATCH** personnel to check for HCU scram discharge valve leaking as indicated by elevated discharge piping temperatures for associated CRD. ☐
- **PERFORM** 2-TI-393 for control rods with high temperatures or failed thermocouples. ☐
- **REFER TO** 0-OI-55, 2-OI-85, 2-AOI-85-3. ☐
- **FLUSH** CRD to unblock restricted cooling water flow. **REFER** to 2-OI-85. ☐
- **DECLARE** the control rod, which is in alarm, "SLOW" as directed by 2-TI-393 per Tech Spec. Table 3.1.4-1 Note 1. ☐
- **RAISE** CRD Flow, as directed by Unit Supervisor, if required to keep the drives cool per "CRD Pump Operation At Elevated Flow" section of 2-OI-85. ☐

Continued on Next Page

LCO 3.1.3 Each control rod shall be OPERABLE.

APPLICABILITY: MODES 1 and 2.

ACTIONS

----------NOTE----------
Separate Condition entry is allowed for each control rod.

CONDITION	REQUIRED ACTION	COMPLETION TIME
A. One withdrawn control rod stuck.	----------NOTE---------- Rod worth minimizer (RWM) may be bypassed as allowed by LCO 3.3.2.1, "Control Rod Block Instrumentation," if required, to allow continued operation. ----------	
	A.1 Verify stuck control rod separation criteria are met.	Immediately
	AND	
	A.2 Disarm the associated control rod drive (CRD).	2 hours
	AND	
		(continued)

A. (continued)	A.3	Perform SR 3.1.3.3 for each withdrawn OPERABLE control rod.	24 hours from discovery of Condition A concurrent with THERMAL POWER greater than the low power setpoint (LPSP) of the RWM
	AND		
	A.4	Perform SR 3.1.1.1.	72 hours
B. Two or more withdrawn control rods stuck.	B.1	Be in MODE 3.	12 hours
C. One or more control rods inoperable for reasons other than Condition A or B.	C.1	----------NOTE---------- RWM may be bypassed as allowed by LCO 3.3.2.1, if required, to allow insertion of inoperable control rod and continued operation. ----------	
		Fully insert inoperable control rod.	3 hours
	AND		
	C.2	Disarm the associated CRD.	4 hours

ACTIONS (continued)

CONDITION	REQUIRED ACTION	COMPLETION TIME
D. ----------NOTE---------- Not applicable when THERMAL POWER > 10% RTP. ---------- Two or more inoperable control rods not in compliance with banked position withdrawal sequence (BPWS) and not separated by two or more OPERABLE control rods.	D.1 Restore compliance with BPWS. OR D.2 Restore control rod to OPERABLE status.	4 hours 4 hours
E. Required Action and associated Completion Time of Condition A, C, or D not met. OR Nine or more control rods inoperable.	E.1 Be in MODE 3.	12 hours

BASES

LCO

The OPERABILITY of an individual control rod is based on a combination of factors, primarily, the scram insertion times, the control rod coupling integrity, and the ability to determine the control rod position. Accumulator OPERABILITY is addressed by LCO 3.1.5. The associated scram accumulator status for a control rod only affects the scram insertion times; therefore, an inoperable accumulator does not immediately require declaring a control rod inoperable.

3.1 REACTIVITY CONTROL SYSTEMS

3.1.4 Control Rod Scram Times

LCO 3.1.4

a. No more than 13 OPERABLE control rods shall be "slow," in accordance with Table 3.1.4-1; and

b. No more than 2 OPERABLE control rods that are "slow" shall occupy adjacent locations.

APPLICABILITY: MODES 1 and 2.

ACTIONS

CONDITION	REQUIRED ACTION	COMPLETION TIME
A. Requirements of the LCO not met.	A.1 Be in MODE 3.	12 hours

Table 3.1.4-1 (page 1 of 1)
Control Rod Scram Times

----------NOTES----------

1. OPERABLE control rods with scram times not within the limits of this Table are considered "slow."

2. Enter applicable Conditions and Required Actions of LCO 3.1.3, "Control Rod OPERABILITY," for control rods with scram times > 7 seconds to notch position 06. These control rods are inoperable, in accordance with SR 3.1.3.4, and are not considered "slow."

LCO

Scram times can be adversely affected by high control rod drive temperatures. Temperatures over 350°F may result in a measurable delay in scram time response times for an otherwise normally performing CRD due to the potential for flashing of the hot water in the drive when the scram valves are opened. As a conservative measure, CRDs which have a temperature of greater than 350°F will either be classified as “slow” rods or an engineering evaluation can be performed. This LCO applies only to OPERABLE control rods since inoperable control rods will be inserted and disarmed (LCO 3.1.3). Slow scramming control rods can be conservatively declared inoperable and not accounted for as "slow" control rods.

Figure 2: Screening for SRO-only linked to 10 CFR 55.43(b)(5) (Assessment and selection of procedures)

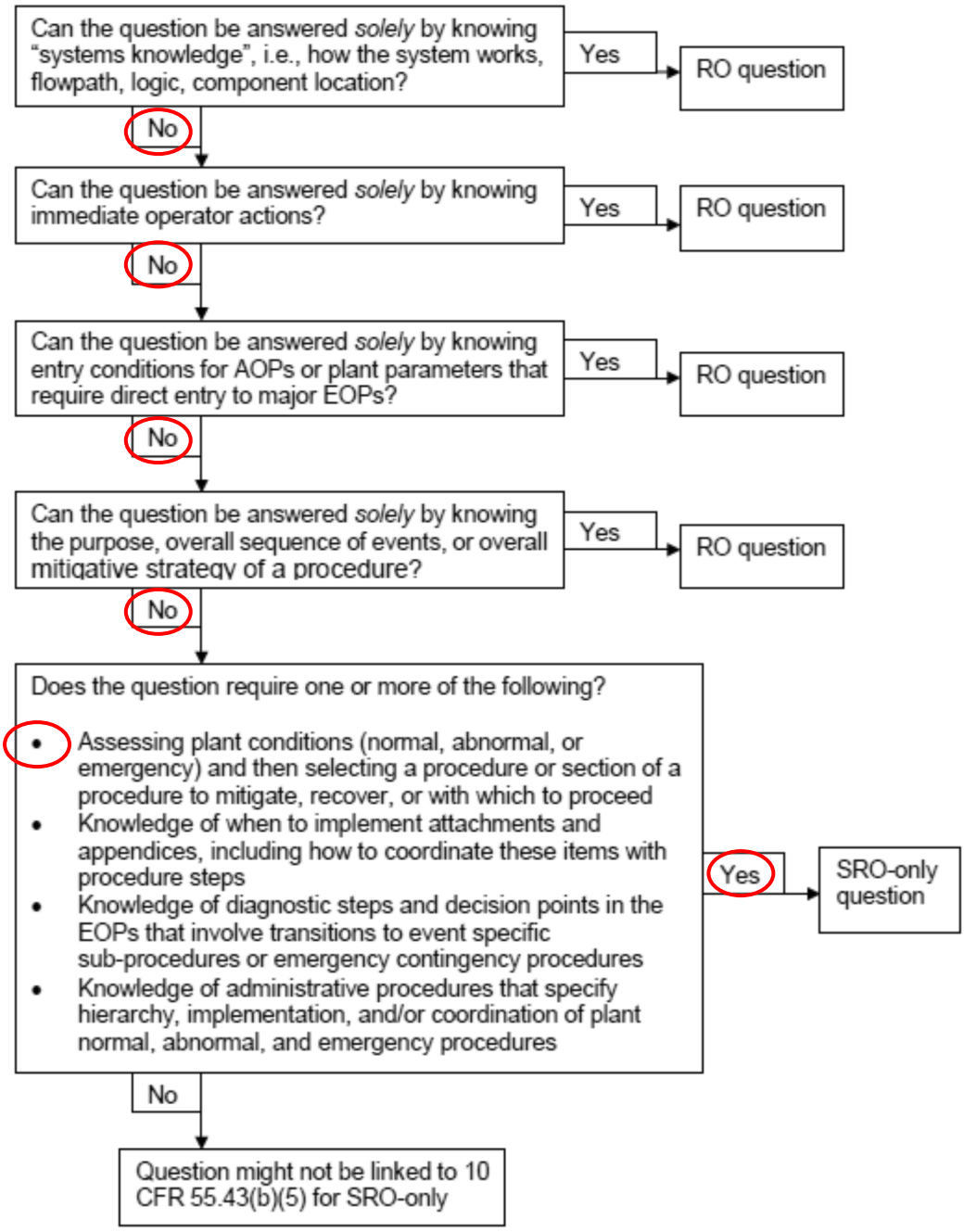

BFN 1501 Q91

Q 91

Unit 3 is operating at 100% power with several control rods declared SLOW due to scram time testing data in accordance with Tech Spec 3.1.4, Control Rod Scram Times.

(See attached illustration).

Subsequently,

The CRD pump tripped and was restarted in accordance with 3-AOI-85-3, CRD System Failure.

- During the time the CRD pump was not running, the CONTROL ROD DRIVE UNIT TEMP HIGH (3-9-5A, Window 17) annunciator alarmed.
- ALL actions required by 3-ARP-9-5A, Window 17 were completed.
- CRD 34-19 temperature is now 351°F and stable.

Which one of the following completes both statements?

CRD 34-19 __ (1) __ required to be declared SLOW.
Tech Spec LCO 3.1.4, Control Rod Scram Times, __ (2) __ met.

[Reference and Illustration Provided]

A. (1) is
(2) is Not

B. (1) is
(2) is

C. (1) is Not
(2) is Not

D. (1) is Not
(2) is

Answer: A

QUESTION 93 Rev 2

Unit 2 is in Mode 1. Operations and Reactor Engineering are running TIPs.

See the attached picture to evaluate the TIP system status.

Note: Starburst indicates the light is illuminated.

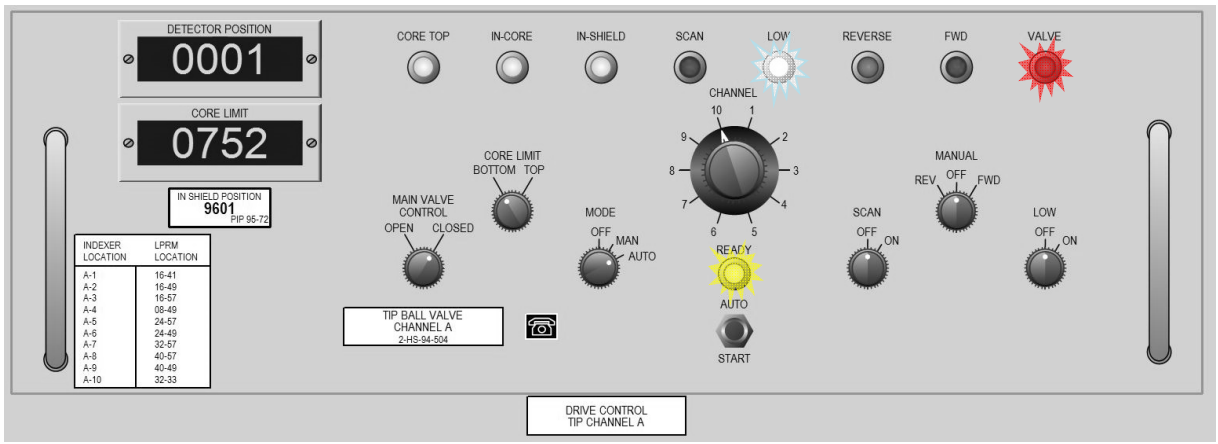

[REFERENCE PROVIDED]

ASSUME: No other Operator actions are taken.

Which one of the following completes the statements below?

The TIP detector is currently located at the __ (1) __.

If the Unit Operator places the TIP Channel A Mode Switch in off __ (2) __ is required by Tech Spec.

A. (1) core bottom
   (2) no action

B. (1) core bottom
   (2) isolating the penetration within 4 hours

C. (1) Indexer
   (2) no action

D. (1) Indexer
   (2) isolating the penetration within 4 hours

Answer: D

Examination Outline Cross-Reference	Level:	RO	SRO
	Tier #		2
	Group #		2
	K/A#	215001 G2.2.44	
	Importance Rating	3.1	3.1

Traversing In-Core Probe; Ability to interpret control room indications to verify the status and operation of a system, and understand how operator actions and directives affect plant and system conditions. (CFR: 41.5 / 43.5)

Justification for K/A match: This is a Tier 2, Systems question about the TIP System, tied with a equipment control generic K/A concerning the ability to interpret control room indications and understand how operator actions affect the system condition. To match this K/A a systems operating question was set up and asks how the operation of a particular switch will affect the PCIS and to make it SRO only, a T.S. application question was written.

Explanation: Correct D: The TIP detector is at the indexer. 2-OI-94 P&L Q states when detector is outside shield AND the MODE switch is turned OFF then automatic withdrawal of detector CANNOT occur and subsequent ball valve closure is prohibited due to interfering cable/detector. Shear valves may have to be actuated. With the ball valve INOP entry into Tech Spec 3.6.1.3 is required. The current picture shows the TIP at the indexer (0001) so the ball valve will not close and the PCIV must be declared inoperable. Looking at T.S. 3.6.1.3 PCIVs, the affected line must be Isolated within 4 hrs and verified closed every 31 days.

A. **Incorrect because –** The detector is at the indexer and with the mode switch in OFF the TIP cannot retract, making PCIS Group 8 Inoperable for that line.
Plausible because – The core limit can indicate the core bottom or the core top. If the candidate assumes that 0752 is the core top then it is plausible that the core bottom could be 0001. No action would be required if the TIP would still withdraw and the ball valve would close.

B. **Incorrect because –** The detector is at the indexer.
Plausible because – See A above and Part 2 is correct.

C. **Incorrect because –** Tech Spec action is required with the mode switch in OFF since the TIP cannot retract, making PCIS Group 8 Inoperable for that line.
Plausible because – Part 1 is correct and No action would be required if the TIP would still withdraw and the ball valve would close.

Technical Reference(s): 2-OI-94 Rev 37, U2 Tech Spec 3.6.1.3 amendment 253

Proposed references to be provided to applicants during examination: T.S. 3.6.1.3 PCIVs

Learning Objective (As available):

Question Source:	Bank:	
	Modified Bank:	
	New:	X
Question History:	Previous NRC:	None
Question Cognitive Level:	Memory or Fundamental Knowledge	
	Comprehension or Analysis	X
10 CFR Part 55 Content:	43(b)(5)	

3.0 PRECAUTIONS AND LIMITATIONS (continued)

L. Detector may be stored at Indexer for approximately 24 hours or as directed by RP personnel following removal of TIP detector from core region PROVIDED the automatic withdrawal and isolation capability of TIPs is maintained. Temporary storage of detector at Indexer (0001) is allowed only for ALARA concerns and to prevent unnecessary masking of multiple inputs to annunciator, RX BLDG AREA RADIATION HIGH 2-RA-90-1D (2-XA-55-3A, Window 22).

M. The following conditions are to be ensured when detector is stored at the Indexer to meet requirements of TS LCO 3.6.1.3:

1. Drive remains energized (MODE may be in MANUAL or AUTO).
2. Ball Valve operation normal and remains energized.
3. Movement in reverse direction is NOT prohibited (problem may be indicated by one or all the following):
   "In-shield" logic sealed in ("In-shield" light illuminated on console or "R" contactor de-energized due to K2 "in-shield" relay dropped out).
   Drive mechanically bound.

Q. [NER/C] DO NOT turn power off to a TIP Drive Motor if its detector is outside shield chamber unless personnel safety requires it. [GE SIL-166] When detector is outside shield AND the MODE switch is turned OFF OR power is lost to the drive (I&C B), then automatic withdrawal of detector CANNOT occur and subsequent ball valve closure is prohibited due to interfering cable/detector. Shear valves may have to be actuated. Evaluate Technical Specification TS LCO 3.6.1.3, Primary Containment Isolation Valves, conditions C and E.

PCIVs
3.6.1.3

SURVEILLANCE REQUIREMENTS

SR 3.6.1.3.4 Verify continuity of the traversing incoreprobe (TIP) shear isolation valve explosivecharge.

SR 3.6.1.3.5 Verify the isolation time of each power operated, automatic PCIV, except for MSIVs, is within limits.

QUESTION 94 Rev 1

To maintain an active SRO license, an SRO must actively perform a minimum of _____ per calendar quarter in a position credited for watch-standing proficiency.

A. 40 hours only

B. a complete tour of the plant and 40 hours

C. 5-12 hour shifts only

D. a complete tour of the plant and 5-12 hour shifts

Answer: C

Examination Outline Cross-Reference	Level:	RO	SRO
	Tier #		3
	Group #		
	K/A#	G 2.1.4	
	Importance Rating		3.8

Knowledge of individual licensed operator responsibilities related to shift staffing, such as medical requirements, “no-solo” operation, maintenance of active license status, 10CFR55, etc. (CFR: 41.10 / 43.2)

Justification for K/A match: This is a Tier 3 SRO Conduct of Operations Generic K/A that asks the SRO to recall his requirements to maintain an active SRO license.

Explanation: CORRECT C: To maintain an active status, the licensee shall actively perform the functions of an SRO for a minimum of seven 8-hour shifts, or five 12-hour shifts, per calendar quarter, in a position credited for watch-standing proficiency.

A. **Incorrect because –** the requirement is seven 8-hour shifts, or five 12-hour shifts.
Plausible because – 40 hours is the correct time frame for returning an inactive license to active status

B. **Incorrect because –** The requirement is seven 8-hour shifts, or five 12-hour shifts.
Plausible because - a complete tour of the plant and 40 hours is correct for returning an inactive license to active status.

D. **Incorrect because –** a complete tour of the plant is not required.
Plausible because - a complete tour of the plant is required for returning an inactive license to active status and 5-12 hour shifts is correct.

Technical Reference(s): OPDP-10 Rev 8, OPL171.259

Proposed references to be provided to applicants during examination: None

Learning Objective (As available): OPL171.259, LO 1

Question Source:	Bank: Modified Bank: New: X
Question History:	Previous NRC: None
Question Cognitive Level:	Memory or Fundamental Knowledge X Comprehension or Analysis
10 CFR Part 55 Content:	43(b)(1)

3.2 Instructions

3.2.1 Active License Status Maintenance

A. To maintain an active status, the licensee shall actively perform the functions of an SRO or RO for a minimum of seven 8-hour shifts, or five 12-hour shifts, per calendar quarter, in a position credited for watch-standing proficiency.

B. To maintain the supervisory portion of an SRO license active, an SRO must stand at least one complete watch per calendar quarter in a shift crew position credited for SRO-only supervisory licensed duties. The remainder of complete watches (to meet the required minimum of seven 8-hour or five 12-hour shifts per calendar quarter) may be performed in either a credited SRO or RO position.

C. It is the licensee's responsibility to maintain cognizance of his/her license status.

D. Each site will track license status using Learning Management System (LMS). If an individual's license is not listed as active, he or she shall not perform in a TS licensed position until the reason is evaluated and corrected. If the licensee has met all requirements but is not showing active due to an error or delay with LMS or a supporting function, a Service Request (SR) shall be initiated to document the reason, and he or she may then hold a licensed position.

E. A licensee who is reactivating a license shall work 40 hours performing licensed duties in tandem with an active licensed person (Under Instruction).

F. When a licensee is issued a new NRC License number, the licensee is immediately active. The licensee is not required to perform 40 hours Under Instruction that calendar quarter and is not required to stand five 12-hour shifts or seven 8-hour shifts in the calendar quarter that the new license number was issued. The licensee must stand the required shifts in the next calendar quarter to maintain an active license.

3.2.4 Nuclear Plant Requirements for Returning an Inactive License to Active Status

This section is intended to provide guidance to return a licensed individual to an active status.

A. The Code of Federal Regulation, 10 CFR55.53 f(2) specifies returning a license to active status. The intent of the code is to ensure proficiency in the conduct of licensed activities prior to assuming licensed duties. The following requirements are addressed as part of this code:

1. The qualifications and status of the licensee are current and valid. This requirement ensures the licensee has completed all required requalification training, including plant modifications and industry events; and secondly, that all conditions of his/her license are still being met.

2. This licensee has completed a minimum of 40 hours of shift functions under the direction of a reactor operator or senior operator, as appropriate, and in the position to which the individual will be assigned. This ensures that an active license is directing or performing the manipulations of plant controls, and allows the inactive individual to obtain proficiency at his/her watch station. Included within the minimum of 40 hours is the following:

   a. A complete review of turnover procedures by the reactor operator or senior reactor operator as appropriate for the position, to ensure that the licensee is familiar with current shift turnover practices.

   b. A complete tour of the plant, accompanied by an active licensed RO or SRO, as appropriate. Plant tour should be of similar detail and thoroughness as AUO rounds.

QUESTION 95 Rev 0

Unit 1 is in MODE 2 with a startup in progress in accordance with 1-GOI-100-1A, Unit Startup. Reactor Pressure is 955 psig and the first bypass valve is 10% open. Auxiliary steam loads are being supplied by Auxiliary Steam.

Chemistry reports the following reactor water chemistry parameters to the Control Room:

- Chlorides: 0.09 ppm
- Conductivity: 1.5 µmhos/cm
- pH: 5.0

Which ONE of the following identifies the minimum **required** action(s) in accordance with TRM 3.4.1, Coolant Chemistry Limits?

[REFERENCE PROVIDED]

A. Required Action A.1

B. Required Action B.1

C. Required Action C.1

D. Required Action D.1

Answer: C

Examination Outline Cross-Reference	Level:	RO	SRO
	Tier #		3
	Group #		
	K/A#	G 2.1.34	
	Importance Rating		3.5

Knowledge of primary and secondary plant chemistry limits.

Justification for K/A match: This is a Tier 3 Conduct of Operations Generic K/A requiring the knowledge of chemistry limits and application of the TRM. To match the K/A and make this an SRO only question, it was written to ask the SRO knowledge of the Technical Requirements Manual's Bases concerning greater than 1 hour LCOs.

Explanation: CORRECT C: With the Reactor Water Chemistry parameters being reported as: Chlorides: 0.09 ppm, Conductivity: 1.5 µmhos/cm, and pH: 5.0. The SRO will have to assess those conditions against TRM 3.4.1 Coolant Chemistry limits specified in TRM Table 3.4.1-1 for Startup conditions. Column A "Steaming Rates <100,000 lb/hr and the values for Chlorides and Conductivity are in spec, however pH is low out of the range of 5.8 to 8.6. CONDITION C REQUIRED ACTION C.1 Restore pH to within limits within 24 hours is correct.

A. **Incorrect because -** Conductivity is in spec for these sets of conditions.
   Plausible because this would be correct if steam flow was above 100,000 lbs/Hr.

B. **Incorrect because -** Chlorides are in spec for these sets of conditions.
   Plausible because chlorides are limited by Table 3.4.1-1.

D. **Incorrect because -** this is the action to take if pH cannot be restored within the specified time limit.
   Plausible because this is correct for conductivity or chloride limits of Table 3.4.1-1 column A.

Technical Reference(s): TRM 3.4.1 Rev 21, TRM Bases 3.4.1 Rev 21

Proposed references to be provided to applicants during examination: **TRM 3.4.1 & Table**

Learning Objective (As available): OPL171.001 Rev. 16, ILT L.O. 1,2,4

Question Source:	Bank:	X
	Modified Bank:	
	New:	
Question History:	Previous NRC:	BFN 1501 NRC Exam Question 94
Question Cognitive Level:	Memory or Fundamental Knowledge	
	Comprehension or Analysis	X
10 CFR Part 55 Content:	43(b)(2)	

TR 3.4.1 Coolant Chemistry

There are some operating conditions under which the dissolved oxygen content of the reactor coolant water could be higher than0.3 ppm, such as reactor startup and hot standby. During these periods, the most restrictive limits for conductivity and chlorides have been established. When steaming rates exceed 100,000 lb/hr, boiling deaerates the reactor water. This reduces dissolved oxygen concentration and assures minimal chloride-oxygen content, which together tend to induce stress corrosion cracking.

TLCO 3.4.1
Prior To Startup And At Steaming Rates < 100,000 lb/hr. At steaming rates less than 100,000 lb/hr, the dissolved oxygen content could be elevated in the reactor coolant since not enough boiling may have occurred to deaerate the reactor water. These limits are needed when the reactor vessel may be pressurized but at very low steaming rates. Chloride stress corrosion cracking requires three components to occur:
1. Chloride ions
2. Oxygen
3. Pressure or stress

Since oxygen may be at higher concentrations at low steaming (continued) rates, the chloride concentration limit is lower than at higher steaming rates when the oxygen content is lower.
However, the conductivity is allowed to be at a higher level provided it is not caused from chloride ions due to the fact that the dissolved gases may result in higher conductivity. During startup or hot standby conditions, the reactor water cleanup system may be more efficient since the makeup from feedwater is very low.

TR 3.4 REACTOR COOLANT SYSTEM

TR 3.4.1 Coolant Chemistry

LCO 3.4.1 Reactor coolant chemistry shall be maintained within the limits of Table 3.4.1-1.

APPLICABILITY: According to Table 3.4.1-1

ACTIONS

CONDITION		REQUIRED ACTION		COMPLETION TIME
A.	Conductivity greater than the limit of Table 3.4.1-1 Column B but ≤ 10 µmho/cm at 25°C.	A.1	Verify by administrative means that conductivity has not been > 1.0 µmho/cm at 25°C for > 2 weeks in the past year.	Immediately
B.	Chloride concentration greater than the limit of Table 3.4.1-1 Column B or E but ≤ 0.5 ppm.	B.1	Verify by administrative means that chloride concentration has not been > 0.2 ppm for > 2 weeks in the past year.	Immediately
C.	pH not within limits of Table 3.4.1-1 Column A, B, and E.	C.1	Restore pH to within limits.	24 hours

(continued)

ACTIONS

CONDITION	REQUIRED ACTION	COMPLETION TIME
D. Required Action and associated Completion Time of Conditions A, B, or C not met. OR Conductivity > 10 µmho/cm at 25°C. OR Chloride concentration > 0.5 ppm. OR Conductivity or chloride concentration limits of Table 3.4.1-1 Column A exceeded.	D.1 Initiate an orderly shutdown. AND D.2 Be in MODE 4.	Immediately As rapidly as cooldown rate permits
E. Coolant chemistry limits of Table 3.4.1-1 Column C, D, or E exceeded.	E.1 Initiate action to restore coolant chemistry within limits.	Immediately

Table 3.4.1-1
Coolant Chemistry Limits[1]

CHEMISTRY PARAMETERS	COLUMN A APPLICABLE CONDITION Prior To Startup And At Steaming Rates < 100,000 lb/hr	COLUMN B APPLICABLE CONDITION Steaming Rates > 100,000 lb/hr	COLUMN C APPLICABLE CONDITION Reactor Not Pressurized With Fuel In Reactor Vessel, Except During Startup Condition	COLUMN D[2] APPLICABLE CONDITION Noble Metal Chemical Application and Subsequent Reactor Coolant Cleanup	COLUMN E[3] APPLICABLE CONDITION Operation of HWC Following Noble Metal Chemical Application
CHLORIDE (ppm)	≤ 0.1	≤ 0.2	≤ 0. 5	≤ 0.1	≤ 0.2
CONDUCTIVITY (µmho/cm at 25°C)	≤ 2.0	≤ 1.0	≤ 10.0	≤ 20. 0	≤ 2.0
pH	5.6-8.6	5.6-8.6	5.3-8.6	4.3-9.9	5.6-8.8

(1) When there is no fuel in the reactor vessel, Technical Requirement reactor coolant chemistry limits do not apply.

(2) During the Noble Metal Chemical Application and subsequent reactor coolant cleanup, CONDITIONS A, B, C, and D (including Required Actions and Completion Times) do not apply.

(3) During operation of HWC following the Noble Metal Chemical Application, CONDITION A (including Required Action and Completion Time) does not apply.

Figure 1: Screening for SRO-only linked to 10 CFR 55.43(b)(2) (Tech Specs)

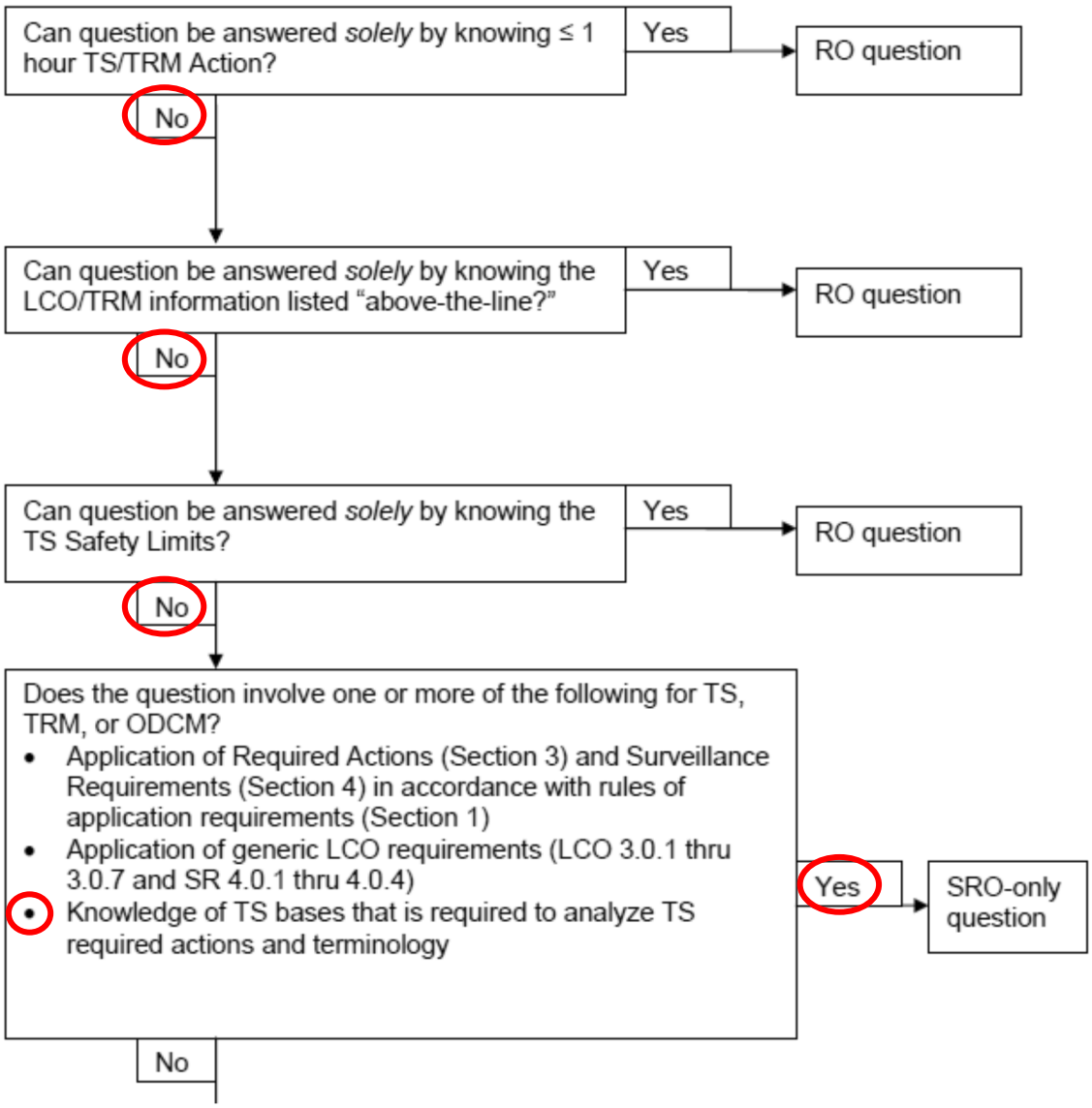

QUESTION 96 Rev 0

Which one of the following completes the statements below regarding the eSOMs Off-Normal Equipment Alignment tracker?

The eSOMs Off-Normal Equipment Alignment tracker is to be used when equipment is aligned in an off-normal condition and is **NOT** restored __ (1) __.

The procedure that authorizes the use of the eSOMs Off-Normal Equipment Alignment tracker is __ (2) __.

A. (1) within 72 hours
(2) NPG-SPP-07.1 On Line Work Management

B. (1) before the end of the current shift
(2) NPG-SPP-07.1 On Line Work Management

C. (1) within 72 hours
(2) NPG-SPP-10.1 System Status Control

D. (1) before the end of the current shift
(2) NPG-SPP-10.1 System Status Control

Answer: D

Examination Outline Cross-Reference	Level:	RO	SRO
	Tier #		3
	Group #		
	K/A#	G 2.2.14	
	Importance Rating		4.3

Knowledge of the process for controlling equipment configuration or status.

Justification for K/A match: This is a Tier 3 Equipment Control Generic K/A requiring SRO knowledge of the process for controlling equipment configuration. To match the K/A at the SRO level, a question was written that requires the SRO to determine which procedure governs certain aspects of Status control and then ask that they recall what that action is for a particular set of conditions.

Explanation: CORRECT D: In accordance with NPG-SPP-10.1 System Status Control section 3.2.6.5.a. Make an entry when equipment is aligned in an off-normal condition and is **NOT** restored before the end of the current shift.

A. **Incorrect because –** this is the wrong procedure and wrong amount of time allowed. The requirement is the end of the current shift and the procedure is NPG-SPP-10.1
Plausible because - an off normal component must be configured by one of the approved methods within a reasonable time (72 hours). Part 2 is plausible because NPG-SPP-07.1 governs the on line work process. Note: the reference to the Off Normal Equipment tracker in NPG-SPP 10.1 is under the heading of WORK DOCUMENTS.

B. **Incorrect because –** this is the wrong procedure, the correct procedure is NPG-SPP-10.1
Plausible because NPG-SPP-07.1 governs the on line work process. Note: the reference to the Off Normal Equipment tracker in NPG-SPP 10.1 is under the heading of WORK DOCUMENTS.

C. **Incorrect because –** The time requirement is the end of the current shift.
Plausible because - an off normal component must be configured by one of the approved methods within a reasonable time (72 hours).

Technical Reference(s): NPG-SPP-10.1 Rev 7.

Proposed references to be provided to applicants during examination: None

Learning Objective (As available): OPL171.113 OBJ 8

Question Source:	Bank: Modified Bank: New: X
Question History:	Previous NRC: N/A
Question Cognitive Level:	Memory or Fundamental Knowledge X Comprehension or Analysis
10 CFR Part 55 Content:	43(b)(3)

3.2.6 Work Documents (continued)

5. If available, eSOMs Off-Normal Equipment Alignment tracker functions similar to the LCO tracker portions of the software and provides the user a single place for entering off-normal equipment status. This method may be used in lieu of Attachment 3. The following rules apply to its use:

a. Make an entry when equipment is aligned in an off-normal condition and is **NOT** restored before the end of the current shift.
b. Make an entry when equipment alignment is changed under a Work Order and not otherwise flagged or tagged. For example, notching a control rod in one position to clear recurring Control Rod Drift alarms.c. Make an entry for conditions which the SM/SRO deems necessary.
d. Do **NOT** make an entry for equipment alignments that are tagged or flagged, such as clearances or TACFs, because doing so would be redundant and adds no value.

Attachment 7
(Page 1 of 2)

Component Deviation Log Instructions

3.0 INSTRUCTIONS

A. The SM/ US shall maintain a Component Deviation Log that shows the current status of plant components that are **NOT** in their normal position and are **NOT** being controlled by one of the methods in this procedure. The Component Deviation Log will contain an index similar to Attachment 4.

1. Any component deviated from its normal configuration, and **NOT** configured by an approved method shall be assigned a tracking number and documented on a configuration sheet (Attachment 4) until the component can be configured by an approved configuration methodology. For example, if a leak occurs that results in valve manipulations to isolate the leak, the component deviation log would be used to track the off normal condition of the valves until a hold order can be written.

2. The component must be configured by one of the approved methods within a reasonable time (72 hours).

QUESTION 97 Rev 2

In accordance with LCO 3.0.4, Tech Spec Bases, what condition allows entry into a MODE or other specified condition in the Applicability with the LCO not met?

When the associated ACTIONS…

A. to be entered can be completed within the specified completion time.

B. permit continued operation in the MODE or other specified condition in the Applicability for an unlimited period of time.

C. allow continued operation of equipment under administrative control.

D. permit not entering the required actions for supported equipment while the associated support equipment is inoperable.

Answer: B

Examination Outline Cross-Reference	Level:	RO	SRO
	Tier #		3
	Group #		
	K/A#	G 2.2.25	
	Importance Rating		4.2

Knowledge of the bases in Technical Specifications for limiting conditions for operations and safety limits. (CFR: 43.2)

Justification for K/A match: Tier 3 SRO Generic Equipment Control, to match this K/A the question asks the candidate to recall the definition and provisions given in the bases for LCO Applicability section.

Explanation: CORRECT B: LCO 3.0.4 governs the change in MODEs or other specified condition, if certain conditions are met. One of the conditions is when the associated ACTIONS to be entered permit continued operation in the MODE or other specified condition in the Applicability for an unlimited period of time.

A. **Incorrect because** – this is not IAW LCO 3.0.4 and the question specifically asks about the Tech Spec Bases concerning LCO 3.0.4.
Plausible because – This is given as a provision in T.S. LCO 3.0.2, Completion of the Required Actions within the specified Completion Times constitutes compliance with a Specification.

C. **Incorrect because** – This is not IAW LCO 3.0.4 and the question specifically asks about the Tech Spec Bases concerning LCO 3.0.4.
Plausible because – This is given as a provision in T.S. LCO 3.0.5, Equipment removed from service or declared inoperable to comply with ACTIONS may be returned to service under administrative control…

D. **Incorrect because** – this is not IAW LCO 3.0.4 and the question specifically asks about the Tech Spec Bases concerning LCO 3.0.4.
Plausible because – This is given as a provision in T.S. LCO 3.0.6 When a supported system LCO is not met solely due to a support system LCO not being met, the Conditions and Required Actions associated with this supported system are not required to be entered.

Technical Reference(s): Tech Specs Bases Amendment No. 286 R24

Proposed references to be provided to applicants during examination: None

Learning Objective (As available): OPL.171.087 ILT 20

Question Source:	Bank: Modified Bank: New: X
Question History:	Previous NRC: None
Question Cognitive Level:	Memory or Fundamental Knowledge X Comprehension or Analysis
10 CFR Part 55 Content:	55.43 (b)(2)

BASES

LCO 3.0.3 (continued)	Therefore, this LCO can be applicable in any or all MODES. If the LCO and the Required Actions of LCO 3.7.6 are not met while in MODE 1, 2, or 3, there is no safety benefit to be gained by placing the unit in a shutdown condition. The Required Action of LCO 3.7.6 of "Suspend movement of irradiated fuel assemblies in the spent fuel storage pool" is the appropriate Required Action to complete in lieu of the actions of LCO 3.0.3. These exceptions are addressed in the individual Specifications.
LCO 3.0.4	LCO 3.0.4 establishes limitations on changes in MODES or other specified conditions in the Applicability when an LCO is not met. It allows placing the unit in a MODE or other specified condition stated in that Applicability (e.g., the Applicability desired to be entered) when unit conditions are such that the requirements of the LCO would not be met, in accordance with LCO 3.0.4.a, LCO 3.0.4.b, or LCO 3.0.4.c. LCO 3.0.4.a allows entry into a MODE or other specified condition in the Applicability with the LCO not met when the associated ACTIONS to be entered permit continued operation in the MODE or other specified condition in the Applicability for an unlimited period of time. Compliance with Required Actions that permit continued operation of the unit for an unlimited period of time in a MODE or other specified condition provides an acceptable level of safety for continued operation. This is without regard to the status of the unit before or after the MODE change. Therefore, in such cases, entry into a MODE or other specified condition in the Applicability may be made in accordance with the provisions of the Required Actions.

LCO 3.0.2

LCO 3.0.2 establishes that upon discovery of a failure to meet an LCO, the associated ACTIONS shall be met. The Completion Time of each Required Action for an ACTIONS Condition is applicable from the point in time that an ACTIONS Condition is entered. The Required Actions establish those remedial measures that must be taken within specified Completion Times when the requirements of an LCO are not met. This Specification establishes that:

a. Completion of the Required Actions within the specified Completion Times constitutes compliance with a Specification;
and
b. Completion of the Required Actions is not required when an LCO is met within the specified Completion Time, unless otherwise specified.

BASES

LCO 3.0.2 (continued)

There are two basic types of Required Actions. The first type of Required Action specifies a time limit in which the LCO must be met. This time limit is the Completion Time to restore an inoperable system or component to OPERABLE status or to restore variables to within specified limits. If this type of Required Action is not completed within the specified Completion Time, a shutdown may be required to place the unit in a MODE or condition in which the Specification is not applicable. (Whether stated as a Required Action or not, correction of the entered Condition is an action that may always be considered upon entering ACTIONS.) The second type of Required Action specifies the remedial measures that permit continued operation of the unit that is not further restricted by the Completion Time. In this case, compliance with the Required Actions provides an acceptable level of safety for continued operation.

Completing the Required Actions is not required when an LCO is met or is no longer applicable, unless otherwise stated in the individual Specifications.

LCO 3.0.3

The time limits of Specification 3.0.3 allow 37 hours for the unit to (continued) be in MODE 4 when a shutdown is required during MODE 1 operation. If the unit is in a lower MODE of operation when a shutdown is required, the time limit for reaching the next lower MODE applies. If a lower MODE is reached in less time than allowed, however, the total allowable time to reach MODE 4, or other applicable MODE, is not reduced. For example, if MODE 2 is reached in 2 hours, then the time allowed for reaching MODE 3 is the next 11 hours, because the total time for reaching MODE 3 is not reduced from the allowable limit of 13 hours. Therefore, if remedial measures are completed that would permit a return to MODE 1, a penalty is not incurred by having to reach a lower MODE of operation in less than the total time allowed.

In MODES 1, 2, and 3, LCO 3.0.3 provides actions for Conditions not covered in other Specifications. The requirements of LCO 3.0.3 do not apply in MODES 4 and 5 because the unit is already in the most restrictive Condition required by LCO 3.0.3. The requirements of LCO 3.0.3 do not apply in other specified conditions of the Applicability (unless in MODE 1, 2, or 3) because the ACTIONS of individual Specifications sufficiently define the remedial measures to be taken. Exceptions to LCO 3.0.3 are provided in instances where requiring a unit shutdown, in accordance with LCO 3.0.3, would not provide appropriate remedial measures for the associated condition of the unit. An example of this is in LCO 3.7.6, "Spent Fuel Storage Pool Water Level." LCO 3.7.6 has an Applicability of "During movement of irradiated fuel assemblies in the spent fuel storage pool."

LCO 3.0.5

Equipment removed from service or declared inoperable to comply with ACTIONS may be returned to service under administrative control solely to perform testing required to demonstrate its OPERABILITY or the OPERABILITY of other equipment. This is an exception to LCO 3.0.2 for the system returned to service under administrative control to perform the testing required to demonstrate OPERABILITY.

QUESTION 98 Rev 0

Which ONE of the following completes the statements below?

The WRGERMS (RM-90-306) is required to be able to perform its intended function in accordance with the __ (1) __.

IF the WRGERMS gaseous release rate indication is currently exceeding an Emergency Action Level (EAL) limit for an Unusual Event (NOUE) classification, THEN in accordance with EPIP-1, Emergency Classification Procedure __ (2) __.

[REFERENCE PROVIDED]

A. (1) Technical Requirements Manual
   (2) the gaseous release rate is required to be assessed by another method, provided the assessment can be accomplished within 1 hour, BEFORE declaring the Event.

B. (1) Technical Specifications
   (2) the gaseous release rate is required to be assessed by another method, provided the assessment can be accomplished within 1 hour, BEFORE declaring the Event.

C. (1) Technical Requirements Manual
   (2) the NOUE is required to be declared immediately. No other assessment method is required to be performed before the declaration is made.

D. (1) Technical Specifications
   (2) the NOUE is required to be declared immediately. No other assessment method is required to be performed before the declaration is made.

Answer: A

Examination Outline Cross-Reference	Level:	RO	SRO
	Tier #		3
	Group #		
	K/A#	G 2.3.15	
	Importance Rating		3.1

Knowledge of radiation monitoring systems, such as fixed radiation monitors and alarms, portable survey instruments, personnel monitoring equipment, etc.

Justification for K/A match: This is a Tier 3 Radiation Control K/A requiring knowledge of one of the BFN radiation monitoring systems. To match the K/A a question was written to test the knowledge of the procedure location of the WRGERMS, TS or TRM. To make it SRO only based on knowing the procedure that requires WRGERMS to perform its intended function.

Explanation: CORRECT A: WRGERMS is required to be functional IAW TRM table 3.3.5-1 surveillance instrumentation. EPIP-1, Section II-4, Radioactivity Release Note 4.1-U states: Prior to making this emergency classification based upon the gaseous release rate indication, assess the release by either of the following methods:
1. Actual field measurements exceed the limits
2. 0-SI-4.8.B.1.a.1 release fraction (OR Projected or actual dose assessments)
If neither assessment can be conducted within 60 minutes then the declaration must be made on the valid WRGERMS reading.

B. **Incorrect because –** the requirements for the WRGERMS is located in the TRM not Tech Specs.
Plausible that WRGERMS could be required to be operable by Tech Spec 3.3.3.1 (Post Accident Monitoring) since this is used for EPIP classifications, but they are not in that Spec.

C. **Incorrect because –** Part 1 is correct. Part 2 is
Plausible because if unable to verify the WRGERMS indication within an hour the declaration is required to be made based only on WRGERMS.

D. **Incorrect because –** the requirements for the WRGERMS is located in the TRM not Tech Specs.
Plausible that WRGERMS could be required to be operable by Tech Spec 3.3.3.1 (Post Accident Monitoring) since this is used for EPIP classifications, but they are not in that Spec.

Technical Reference(s): TRM 3.3.5 Surveillance Instrumentation, OPL171.224, EPIP-1

Proposed references to be provided to applicants during examination: **EPIP-1**

Learning Objective (As available): OPL171.224 Obj. 3

Question Source:	Bank: X Modified Bank: New:
Question History:	Previous NRC: BFN 11-08 Q # 98
Question Cognitive Level:	Memory or Fundamental Knowledge Comprehension or Analysis X
10 CFR Part 55 Content:	43(b)(4)

Table 3.3.5-1 (page 2 of 2)
Surveillance Instrumentation

PARAMETER AND INSTRUMENTS	APPLICABLE MODES OR OTHER SPECIFIED CONDITIONS	REQUIRED CHANNELS	CONDITIONS REFERENCED FROM REQUIRED ACTION A.1	TECHNICAL SURVEILLANCE REQUIREMENTS	TYPE INDICATION AND RANGE
4. CAD Tank Level					
a. CAD Tank "A" Level (LI-84-2A) (e)	1,2	1	C	TSR 3.3.5.2 TSR 3.3.5.6	Indicators 0 to 100%
b. CAD Tank "B" Level (LI-84-13A) (e)	1,2	1	C	TSR 3.3.5.2 TSR 3.3.5.6	Indicators 0 to 100%
5. Drywell to Suppression Chamber Differential Pressure (PDI-64-137, PDI-64-138)	(f)	2	C	TSR 3.3.5.1 TSR 3.3.5.6	Indicators 0 to 2 psid
6. Relief Valve Tailpipe Thermocouple Temperature or Acoustic Monitor on Relief Valve Tailpipe	1,2,3	1 per Valve (g)	D	TSR 3.3.5.5 TSR 3.3.5.11	Multipoint Recorder 0-600°F Bar graph 10 levels of flow
7. Wide Range Gaseous Effluent Radiation Monitor and Recorder (RM-90-306 and RR-90-360) (h)	Always	1	E	TSR 3.3.5.1 TSR 3.3.5.12	Monitor, Recorder (Noble Gas 10^{-7} - 10^{+5} µCi/cc)

NOTES

4.1-U Prior to making this emergency classification based upon the WRGERMS indication, assess the release by either of the following:

1. Actual field measurements exceed the limits in table 4.1-U
2. 0-SI 4.8.B.1.a.1 release fraction exceeds 2.0

If neither assessment can be conducted within 60 minutes then the declaration must be made on the valid WRGERMS reading.

4.1-A Prior to making this emergency classification based upon the WRGERMS indication, assess the release by either of the following:

1. Actual field measurements exceed the limits in table 4.1-A
2. 0-SI 4.8.B.1.a.1 release fraction exceeds 200

If neither assessment can be conducted within 15 minutes then the declaration must be made on the valid WRGERMS reading.

4.1-S Prior to making this emergency classification based upon the gaseous release rate indication, assess the release by either of the following methods:

1. Actual field measurements exceed the limits in table 4.1-S.
2. Projected or actual dose assessments exceed 100 mrem TEDE or 500 mrem CDE.

If neither assessment can be conducted within 15 minutes then the declaration must be made based on the valid WRGERMS reading.

4.1-G Prior to making this emergency classification based upon the gaseous release rate indication, assess the release by either of the following methods:

1. Actual field measurements exceed the limits in table 4.1-G.
2. Projected or actual dose assessments exceed 1000 mrem TEDE or 5000 mrem CDE.

If neither assessment can be conducted within 15 minutes then the declaration must be made based on the valid WRGERMS reading.

CURVES/TABLES:

Table 4.1-U
RELEASE LIMITS FOR UNUSUAL EVENT

TYPE	MONITORING METHOD	LIMIT	DURATION
Gaseous Release Rate	Stack Noble Gas (WRGERMS)	2.88×10^{7} µCi/sec	1 Hour
Gaseous Release Rate	0-SI 4.8.B.1.a.1	Release Fraction 2.0	1 Hour
Site Boundary Radiation Reading	Field Assessment Team	0.10 MREM/HR Gamma	1 Hour

GASEOUS EFFLUENT

Description

4.1-U		NOTE	TABLE	

Gaseous release exceeds ANY limit and duration in Table 4.1-U.

OPERATING CONDITION:
ALL

UNUSUAL EVENT

BFN 1108 NRC Exam

QUESTION 98

Which ONE of the following completes the statements below?

The WRGERMS(RM-90-306) is required to be operable in accordance with __(1)__.

IF the WRGERMS gaseous release rate indication is the reason for a Notice of Unusual Event (NOUE) classification, THEN in accordance with EPIP-1, Emergency Classification Procedure, __(2)__.

A. (1) Technical Requirements Manual
(2) the gaseous release rate is required to be assessed by another method, provided the assessment can be accomplished within 1 hour, BEFORE the NOUE declaration.

B. (1) Technical Specifications
(2) the NOUE is required to be declared immediately. No other assessment method is required to be performed before the declaration is made, even if completed within 1 hour.

C. (1) Technical Specifications
(2) the gaseous release rate is required to be assessed by another method, provided the assessment can be accomplished within 1 hour, BEFORE the NOUE declaration.

D. (1) Technical Requirements Manual
(2) the NOUE is required to be declared immediately. No other assessment method is required to be performed before the declaration is made, even if completed within 1 hour.

Answer: A

QUESTION 99 Rev 2

The Unit 1 Control Room receives a Turbine Building smoke alarm on the Fire Protection Display Panel.

A member of the plant security force calls the control room and reports smoke in the Turbine Building.

The Shift Manager has evaluated 0-SSI-001, Safe Shutdown Instructions.

NOTE:
EPIP-17, Fire Emergency Procedure
0-SSI-26, Turbine Bldg, Radwaste Bldg

Which ONE of the following describes the actions **currently required** of the operating crew?

Enter 0-AOI-26-1 and __ (1) __.

In accordance with 0-AOI-26-1, Fire Response, Announce the fire location over PA and __ (2) __.

A. (1) 0-SSI-26
   (2) Notify the Clements Volunteer Fire Department by calling the Limestone County 911 Center

B. (1) 0-SSI-26
   (2) MONITOR Control board indications for equipment failures or spurious operation.

C. (1) EPIP-17
   (2) Notify the Clements Volunteer Fire Department by calling the Limestone County 911 Center

D. (1) EPIP-17
   (2) MONITOR Control board indications for equipment failures or spurious operation.

Answer: D

Examination Outline Cross-Reference	Level:	RO	SRO
	Tier #		3
	Group #		
	K/A#	G 2.4.25	
	Importance Rating		3.7

G2.4.25 Knowledge of fire protection procedures.

Justification for K/A match: This question requires knowledge of 0-AOI-26-1, EPIP-17 and the SSIs all of which are fire protection procedures. The SRO only is satisfied by requiring procedure selection.

Explanation: CORRECT D: 0-AOI-26-1 and EPIP-17 are entered when a fire is reported. 0-AOI-26 directs MONITORING Control board indications for equipment failures or spurious operation.

A. **Incorrect because** - 0-SSI-26 would not be entered at this time (entry conditions not met) and Clements Volunteer Fire Department is not notified until requested by the Incident Commander.
Plausible because – 0-AOI-26 directs referencing 0-SSI-001 and REVIEW of applicable SSI for the fire area and because EPIP-17 directs notifying Clements Volunteer Fire Department by calling the Limestone County 911 Center but only when requested by the IC

B. **Incorrect because** – 0-SSI-26 would not be entered at this time (entry conditions not met)
Plausible because – 0-AOI-26 directs referencing 0-SSI-001 and REVIEW of applicable SSI for the fire area and because EPIP-17 directs notifying Clements Volunteer Fire Department by calling the Limestone County 911 Center but only when requested by the IC

C. **Incorrect because** - Clements Volunteer Fire Department is not notified until requested by the Incident Commander.
Plausible because – 0-AOI-26 directs referencing 0-SSI-001 and REVIEW of applicable SSI for the fire area and because EPIP-17 directs notifying Clements Volunteer Fire Department by calling the Limestone County 911 Center but only when requested by the IC

Technical Reference(s): EPIP-17 Rev 22, 0-AOI-26-1 Rev 16.

Proposed references to be provided to applicants during examination: None

Learning Objective (As available):

Question Source:	Bank: Modified Bank: New: X
Question History:	Previous NRC: None
Question Cognitive Level:	Memory or Fundamental Knowledge X Comprehension or Analysis
10 CFR Part 55 Content:	43(b)(5)

4.2 Subsequent Actions (continued)

NOTES

1) The Shift Manager will remain in communication with the Incident Commander and reference 0-SSI-001 for applicability based on the severity of the fire.
2) Each Safe Shutdown Instruction contains illustrations which depict the credited plant/unit equipment and instrumentation for that specific Fire Area.
3) The AUOs are assembled in the Control Rooms to ensure SSI manual actions can be completed within the required time.
4) To ensure that in the event of a APP R fire, containment pressure is not vented below that which is needed to maintain RHR pump NPSH, maintain 1(2,3)-FIC-84-19 in normal position of Manual and "0" scfm.

[4] **IF** directed by the Unit Supervisor, **THEN PERFORM** the following:

[4.1] **NOTIFY** AUOs to report to their assigned Control Room(s), all other

[4.2] **REVIEW** applicable SSI for the fire area.

[4.3] **DISTRIBUTE** SSI attachments to assigned AUOs and review the Section 1.0 time critical actions for the Fire Area.

[4.4] **NOTIFY** the AUOs to:

- **OBTAIN** an Appendix R Radio.
  AND
- **STANDBY** until fire is out OR determination is made to enter applicable SSI.

[4.5] **NOTIFY** the Unit Operators to **OBTAIN** an Appendix R Radio.

[5] **MONITOR** Control boards indications of equipment failures or spurious operation.

1.0 INTRODUCTION

1.1 Purpose
The purpose of this procedure is to provide a means for administering a timely response to fire emergencies at Browns Ferry and a mechanism to notify additional emergency personnel or resources as needed. This procedure applies to all fire emergencies at Browns Ferry Nuclear Plant.

2.0 REFERENCES

2.1 Industry Documents
A. NUREG-0654, "Criteria for Preparation and Evaluation of Radiological Emergency Response Plans and Preparedness in Support of Nuclear Power Plants"
B. 10 CFR 50.47, "Code of Federal Regulations"

2.2 Plant Instructions
A. TVA Radiological Emergency Plan

3.0 INSTRUCTIONS

3.1 General

A. All members of the fire response team will proceed to the scene upon receiving notification.

3.2 Initial Notification by Unit Operator

A. Upon receiving a fire emergency call, the Unit 1 Control Room Unit Operator will:
- Obtain name of caller.
- Obtain location of fire.
- Obtain nature of fire.
- Obtain telephone number from caller.

B. Initiate the "Fire Alarm Bell".

C. Announce fire location over the plant public address (PA) system, repeating at regular intervals until instructed otherwise by Shift Manager or Unit Supervisor.

D. Notify the Fire Protection Personnel using the Operations/Fire Protection Radio.

E. Notify the Shift Manager of the fire.

3.3 Shift Manager Responsibilities

A. The Shift Manager will:
- Dispatch Unit Supervisor or designee to the scene to act as Incident Commander.
- Establish and maintain communications with the Incident Commander.
- Refer to SSI-001 for applicability based on the severity of the fire.
- **IF** Dry Cask Storage (DCS) spent fuel loading/unloading activities are in progress, **THEN NOTIFY** the cask supervisor to evaluate placing the cask in a safe condition.

B. The Shift Manager will, when requested by the Incident Commander, notify the off-duty BFN Fire Protection personnel. Notify the off duty BFN Fire Protection personnel from a call list maintained in the Shift Manager office area. This list will be maintained by the Fire Protection Organization.

C. When requested by the Incident Commander, notify the Clements Volunteer Fire Department. Notify the Clements Volunteer Fire Department by calling the Limestone County 911 Center by dialing * * 212911. Provide a call back number for the Limestone County 911 Center Operator.

D. Following an "Appendix R Fire", direct the Operations Support Center (OSC) to provide ventilation of Shutdown Board Rooms by MSI-0-000-PRO005, Electrical Equipment Room Emergency Ventilation.

E. Following any fire involving the Independent Spent Fuel Storage Installation (ISFSI) HI-STORM or HI TRACK casks:
- Have Engineering inspect the casks for damage.
- Perform 0-SR-DCS 3.1.2.1 to verify the inlet and outlet ducts are free of obstructions.
- Have Radiation Protection access the radiological conditions and consider shielding.

F. When requested by the Incident Commander to shut down ventilation during a fire, consider utilizing 0-AOI-26-1 for ventilation shut down to ensure that fire dampers close properly.

QUESTION 100 Rev 0

Which one of the following completes both statements In accordance with EPIP-1 Emergency Classification Procedure?

IF an Emergency Action Level (EAL) for a higher classification was exceeded, but the present situation indicates a lower classification, THEN the higher classification __ (1) __ be declared.

IF an Emergency Action Level (EAL) was exceeded but has now been totally resolved, THEN the NRC __ (2) __ required to be notified.

A. (1) should still
   (2) is

B. (1) should still
   (2) is **NOT**

C. (1) should **NOT**
   (2) is

D. (1) should **NOT**
   (2) is **NOT**

Answer: C

Examination Outline Cross-Reference	Level:	RO	SRO
	Tier #		3
	Group #		
	K/A#	G 2.4.29	
	Importance Rating		4.4

Knowledge of the emergency plan. (CFR: 41.10 / 43.5)

Justification for K/A match: This is a Tier 3 Emergency K/A about the Emergency Plan. To match the K/A the question requires the candidate to be able to apply the requirements of Emergency Plan Implementing Procedure EPIP-1.

Explanation: CORRECT C: If an EAL was exceeded, but the present situation indicates a lower classification, the fact that the higher classification occurred shall be reported to the NRC and Central Emergency Control Center (CECC), but should not be declared. If an EAL was exceeded, but the emergency has been totally resolved (prior to declaration), the emergency condition that was appropriate shall not be declared but reported.

A. **Incorrect because –** IAW EPIP-1 page 5 the fact that the higher classification occurred should not be declared.
Plausible because – Part 1, IAW EPIP-1 the higher classification shall be reported to the NRC and Part 2 is correct

B. **Incorrect because –** Part 1 see A above. Part 2 the emergency condition that was appropriate shall not be declared but reported.
Plausible because – Part 1 see A above. Part2 the emergency condition that was appropriate is not declared.

D. **Incorrect because –** The Emergency Action Level (EAL) was exceeded but has now been totally resolved, THEN the NRC is required to be notified.
Plausible because – Part 1 is correct and is plausible because the EAL is not declared.

Technical Reference(s): EPIP-1 Rev 51. SPP-3.5 App. A Rev 10

Proposed references to be provided to applicants during examination: None

Learning Objective (As available): OPL171.075 Rev. 27, ILT L.O. 7

Question Source:	Bank: x Modified Bank: New:
Question History:	Previous NRC: 1501 NRC EXAM Q #100
Question Cognitive Level:	Memory or Fundamental Knowledge: X Comprehension or Analysis
10 CFR Part 55 Content:	43(b)(5)

[4] For EAL thresholds that specify duration of the off-normal condition, the NRC expects that the emergency declaration process run concurrently with the specified threshold duration. Once the off-normal condition has existed for the duration specified in the EAL, no further effort on this declaration is necessary— the EAL has been exceeded. Examples of BFN EALs that specify duration of the off-normal condition are;

- GASEOUS EFFLUENT…….4.1-Series
- LIQUID EFFLUENT……4.3-Series
- LOSS OF AC POWER……...5.1-Series
- LOSS OF 250V DC POWER…….5.2-Series
- CONTROL ROOM EVACUATION……6.2-S
- FIRE / EXPLOSION…….6.4-U1
- LOSS OF ASSESSMENT CAPABILITY……..8.3-U AND 8.3-A

[5] When the SED has determined that an EAL has been exceed and identified the appropriate emergency classification level, the emergency declaration should be made promptly (next available opportunity) unimpeded by activities not related to the emergency declaration, unless such activities are necessary for protecting health and safety.

[6] The highest classification for which an Emergency Action level (EAL) currently exists shall be declared.

[7] If an EAL for a higher classification was exceeded but the present situation indicates a lower classification, the fact that the higher classification occurred shall be reported to the NRC and Central Emergency Control Center (CECC), but should not be declared. (Refer to NPG-SPP-03.5, Regulatory Reporting Requirements).

[8] If an EAL was exceeded, but the emergency has been totally resolved (prior to declaration), the emergency condition that was appropriate shall not be declared but reported

to the NRC within one hour using NPG-SPP-03.5, Regulatory Reporting Requirements.

Attachment 1
(Page 3 of 16)

Reporting of Events or Conditions Affecting Licensed Nuclear Power Plants

3.1 Immediate Notification - NRC (continued)

> **NOTE**
>
> The NRC Event Notification Worksheet may be used in preparing for notifying the NRC. This Worksheet may be obtained directly from the NRC website (www.nrc.gov) by performing a "Form 361" search. Attachment 12 provides guidance for completing NRC Form 361.

A. The Immediate Notification Criteria of §50.72 is divided into 1-hour, 4-hour, and 8- hour phone calls. Notify the NRC Operations Center within the applicable time limit for any item which is identified in the Immediate Notification Criteria.

B. The following criteria require 1-hour notification:

1. 10 CFR 50.36(c)(1)(i)(A), (Technical Specifications) - Safety Limits as defined by the Technical Specifications which have been exceeded (violated)

2. §50.72 (a)(1)(i) - The declaration of any of the Emergency classes specified in the licensee's approved Emergency Plan.

> **NOTE**
>
> If it is discovered that a condition existed which met the Emergency Plan criteria but no emergency was declared and the basis for the emergency class no longer exists at the time of discovery, an ENS notification (and notification of the Operations Duty Specialist), within one hour of discovery of the undeclared (or misclassified) event, shall be made. However, actual declaration of the emergency class is not necessary in these circumstances.