NUREG-1139

Safety Evaluation Report

related to the renewal of the operating license for the training and research reactor at the University of Lowell

Docket No. 50-223

U.S. Nuclear Regulatory Commission

Office of Nuclear Reactor Regulation

November 1985

NOTICE

Availability of Reference Materials Cited in NRC Publications

Most documents cited in NRC publications will be available from one of the following sources:

1. The NRC Public Document Room, 1717 H Street, N.W.
   Washington, DC 20555
2. The Superintendent of Documents, U.S. Government Printing Office, Post Office Box 37082,
   Washington, DC 20013-7082
3. The National Technical Information Service, Springfield, VA 22161

Although the listing that follows represents the majority of documents cited in NRC publications, it is not intended to be exhaustive.

Referenced documents available for inspection and copying for a fee from the NRC Public Document Room include NRC correspondence and internal NRC memoranda; NRC Office of Inspection and Enforcement bulletins, circulars, information notices, inspection and investigation notices; Licensee Event Reports; vendor reports and correspondence; Commission papers; and applicant and licensee documents and correspondence.

The following documents in the NUREG series are available for purchase from the GPO Sales Program: formal NRC staff and contractor reports, NRC-sponsored conference proceedings, and NRC booklets and brochures. Also available are Regulatory Guides, NRC regulations in the *Code of Federal Regulations,* and *Nuclear Regulatory Commission Issuances.*

Documents available from the National Technical Information Service include NUREG series reports and technical reports prepared by other federal agencies and reports prepared by the Atomic Energy Commission, forerunner agency to the Nuclear Regulatory Commission.

Documents available from public and special technical libraries include all open literature items, such as books, journal and periodical articles, and transactions. *Federal Register* notices, federal and state legislation, and congressional reports can usually be obtained from these libraries.

Documents such as theses, dissertations, foreign reports and translations, and non-NRC conference proceedings are available for purchase from the organization sponsoring the publication cited.

Single copies of NRC draft reports are available free, to the extent of supply, upon written request to the Division of Technical Information and Document Control, U.S. Nuclear Regulatory Commission, Washington, DC 20555.

Copies of industry codes and standards used in a substantive manner in the NRC regulatory process are maintained at the NRC Library, 7920 Norfolk Avenue, Bethesda, Maryland, and are available there for reference use by the public. Codes and standards are usually copyrighted and may be purchased from the originating organization or, if they are American National Standards, from the American National Standards Institute, 1430 Broadway, New York, NY 10018.

NUREG-1139

Safety Evaluation Report

related to the renewal of the operating license for the training and research reactor at the University of Lowell

Docket No. 50-223

U.S. Nuclear Regulatory Commission

Office of Nuclear Reactor Regulation

November 1985

ABSTRACT

This Safety Evaluation Report for the application filed by the University of Lowell (UL) for renewal of operating license number R-125 to continue to operate its research reactor has been prepared by the Office of Nuclear Reactor Regulation of the U.S. Nuclear Regulatory Commission. The facility is located on the North Campus of the University of Lowell in Lowell, Massachusetts. The staff concludes that the reactor can continue to be operated by the University of Lowell without endangering the health and safety of the public.

TABLE OF CONTENTS

TABLE OF CONTENTS (Continued)

TABLE OF CONTENTS (Continued)

TABLE OF CONTENTS (Continued)

TABLE OF CONTENTS (Continued)

Page

LIST OF FIGURES

LIST OF TABLES

1 INTRODUCTION

By letter dated February 14, 1985, as supplemented, the University of Lowell (UL) submitted a timely application to the U.S. Nuclear Regulatory Commission (NRC/staff) for renewal of the Class 104c Operating License R-125, for a period of 30 years. The research reactor facility is located on the North Campus of the University in Lowell, Massachusetts. The licensee is permitted to operate the reactor within the conditions authorized in past license amendments in accordance with Title 10 of the Code of Federal Regulations, Paragraph 2.109 (10 CFR 2.109), until NRC action on the renewal request is completed.

The renewal application references information regarding the original design of the reactor facility and contains information about modifications to the facility made since initial licensing. The application also includes a revised Safety Analysis Report, information required for an environmental assessment, financial information, operator requalification program, and revised Technical Specifications.

The staff's review with respect to issuing a renewal operating license to UL has been based on visits to the facility and on the information contained in the renewal application and supporting documents, plus responses to requests for additional information. This material is available for review at the Commission's Public Document Room at 1717 H Street, N.W., Washington, D.C. 20555.

The purpose of this SER is to summarize the results of the safety review of the University of Lowell reactor (ULR) and to delineate the scope of the technical details considered in evaluating the radiological safety aspects of continued operation. This SER will serve as the basis for renewal of the license for operation of the ULR facility at power levels up to and including 1 MWt. The facility was reviewed against the requirements of 10 CFR 20, 30, 50, 51, 55, 70, and 73; applicable regulatory guides (principally Division 2, Research and Test Reactors); and appropriate, accepted industry standards (American National Standards Institute/American Nuclear Society (ANSI/ANS) 15 series). Because there are no specific accident-related regulations for research reactors, the staff has, at times, compared calculated hypothetical radiation dose values with related standards in 10 CFR 20, "Standards for Protection Against Radiation," both for employees and the public.

The ULR was initially licensed for operation in December 1974 and criticality was achieved in January 1975. The reactor is housed in a containment building contiguous to the three-story Pinanski Building. The UL radiation laboratory occupies the first floor of the three-story building; the top two floors are occupied by the Computer Science Department (see Figure 1.1).

This Safety Evaluation Report (SER) was prepared by H. Bernard, Project Manager, Division of Licensing, Office of Nuclear Reactor Regulation, Nuclear Regulatory Commission. Major contributors to the review include the project manager and C. Linder, A. Crawford, and J. Elder of the Los Alamos National Laboratory under contract to NRC.

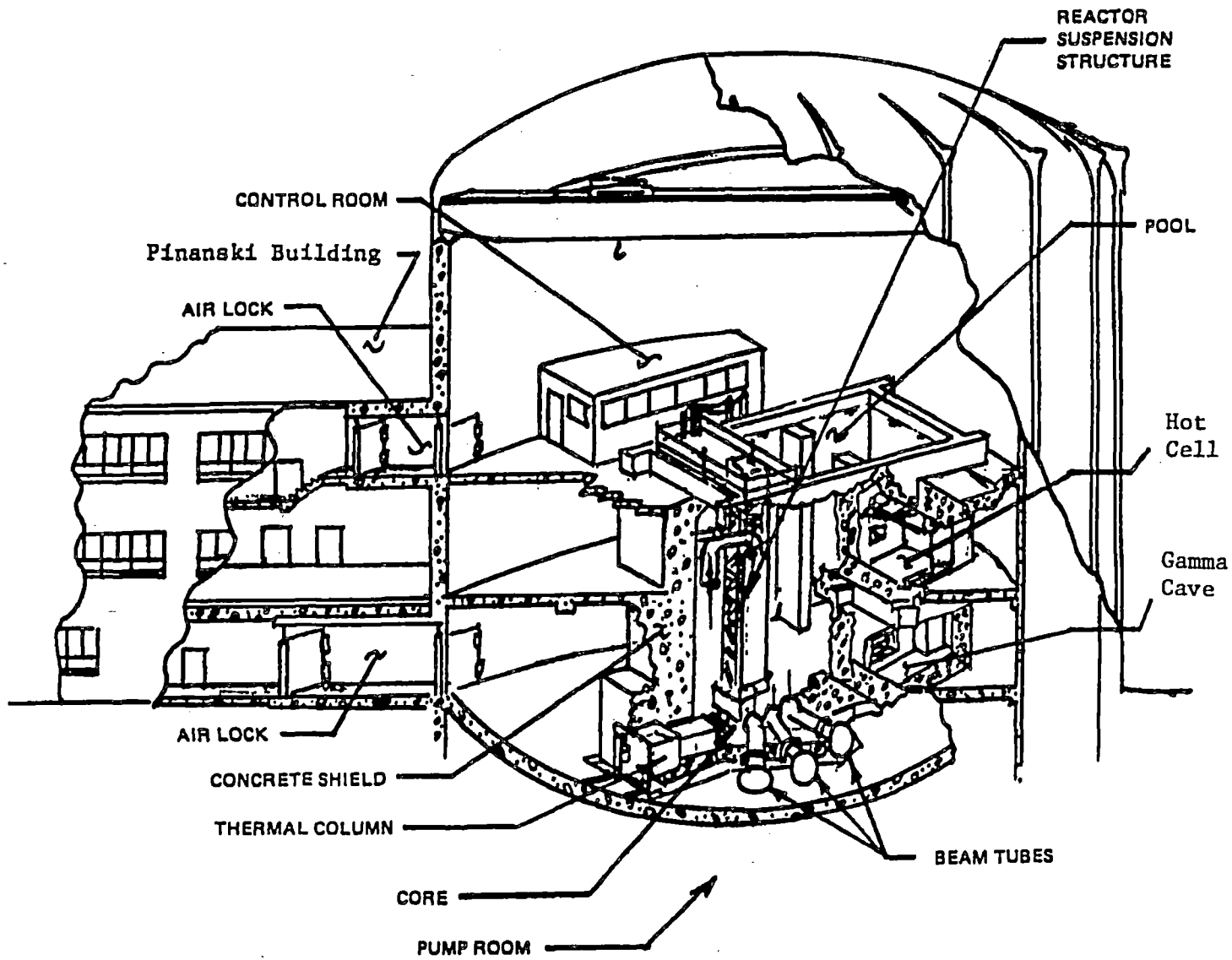

Figure 1.1 The University of Lowell reactor

1.1 Summary and Conclusions of Principal Safety Considerations

The staff's evaluation considered the information submitted to the Commission by the licensee, past operating history recorded in annual reports, reports by the Commission's Office of Inspection and Enforcement, and on-site observations. In addition, as part of its licensing review of several MTR and pool-type reactors, the staff obtained laboratory studies and analyses of several accidents postulated for this type of reactor. The principal safety issues reviewed and conclusions reached for the ULR follow:

(1) The design, testing, and performance of the reactor structure and systems and components important to safety during normal operation are inherently safe, and safe operation can reasonably be expected to continue.

(2) The expected consequences of a broad spectrum of postulated credible accidents have been considered, emphasizing those that could lead to a loss of integrity of fuel element cladding. The staff performed conservative analyses of the most serious credible accidents and determined that the calculated potential radiation doses outside the reactor room would not exceed 10 CFR 20 limits for unrestricted areas.

(3) The licensee's management organization, conduct of training and research activities, and security measures are adequate to ensure safe operation of the facility and protection of special nuclear material.

(4) The systems provided for the control of radiological effluents can be operated to ensure that releases of radioactive wastes from the facility are within the limits of the Commission's regulations and are low as reasonably achievable (ALARA).

(5) The licensee's Technical Specifications, which provide limits controlling operation of the facility, are such that there is a high degree of assurance that the facility will be operated safely and reliably.

(6) The financial data provided by the licensee are such that the staff has determined that the licensee has sufficient funds to cover operating costs and to eventually decommission the reactor facility.

(7) The licensee's program for providing for the physical protection of the facility and its special nuclear material was approved by the NRC by letter dated June 2, 1981, and complies with the requirements of 10 CFR 73.

(8) The licensee's procedures for training its reactor operators and the plan for operator requalification are acceptable. These procedures give reasonable assurance that the reactor facility will be operated competently.

(9) The licensee submitted an Emergency Plan dated November 2, 1982, as supplemented. The NRC approved the plan on March 1, 1985.

1.2 Reactor Facility Description

The ULR is an open-pool-type facility. The heterogeneous core, composed of aluminum and enriched ^{235}U fuel is suspended from a movable bridge that operates on rails mounted on top of the concrete tank. The tank consists of a two-section

pool with a total capacity of 60,000 gal. The stall part of the reactor pool is 16 ft long by 8 ft wide by 31 ft deep; the bulk irradiation section is 12 ft x 6 ft x 31 ft. The reactor is located within an 80-ft diameter by 95½-ft high containment building.

The reactor operates at a licensed power level not in excess of 1 MW, with a peak thermal flux of approximately 1.4×10^{13} n/cm^2/sec. The current core configuration consists of 26, 93% enriched, MTR plate-type fuel elements (standard elements). Each standard element contains 135 grams of ^{235}U in 18 aluminum-clad fuel plates. Overall fuel element dimensions are approximately 3 in. x 3 in. x 26 in. Four boron carbide safety rods and one boral regulating rod are used for coarse and fine control of the core, respectively. The modules surrounding the fuel array may be used for graphite reflection or radiation baskets.

Cooling below 100 kW is by natural convection. At power levels above 100 kW, forced cooling is required, with the heat dissipated in a heat exchanger and a cooling tower.

1.3 Design and Facility Modifications

The only significant modification, since initial licensing, was made to the forced convection cooling system; the "downcomer" mode was changed to the "cross-flow" mode.

1.4 Operation

The ULR is used intermittently for student training and experiments. Total thermal power output since criticality in 1975 is 128.8 MW days.

1.5 Shared Facilities and Operation

The reactor facility and a 5.5 MeV Van deGraaff generator are housed in the radiation laboratory. These are used for activities related to reactor operations, research, and education and training programs in the fields of radiological sciences and nuclear engineering.

The reactor facility shares its utilities--electricity, water, natural gas, non-radioactive sewage, and the like--with other occupants in the Pinanski Building. The reactor room has its own heating, cooling and ventilation units, and a primary coolant system that transfers heat from a heat exchanger system to a secondary loop and a cooling tower.

1.6 Comparison With Similar Facilities

The fuel used in the ULR is based on the MTR design and is very similar to the fuel used in approximately 50 other research reactors operating in the United States and at least 25 reactors operating in foreign countries. Control and instrumentation systems, while different in detail, are based on the same operating principles used in other pool-type research and test reactors using MTR-type fuel.

1.7 Nuclear Waste Policy Act of 1982

Section 302(b)(1)(B) of the Nuclear Waste Policy Act of 1982 provides that the NRC may require, as a precondition to issuing or renewing an operating license

for a research or test reactor, that the licensee shall have entered into an agreement with the Department of Energy (DOE) for the disposal of high-level radioactive waste and spent nuclear fuel. DOE has informed the NRC by letter dated May 3, 1983, that it has determined that universities and other government agencies operating nonpower reactors have entered into contracts with DOE that provide for DOE to retain title to the fuel and to be obligated to take the spent fuel and/or high level waste for storage and reprocessing. Thus, UL is in compliance with the Nuclear Waste Policy Act of 1982.

2 SITE CHARACTERISTICS

2.1 Site Description

The reactor is located approximately in the center of the North Campus of the University of Lowell, in the city of Lowell, Middlesex County, in the northeastern part of Massachusetts, approximately 5 mi from the New Hampshire border.

The North Campus of the university occupies approximately 60 acres and is mainly situated just north and west of the Merrimack River, although several dormitories and a student union building lie south of the river. The surrounding area is primarily residential with some industry southeast of the campus. The campus is near the northern edge of the city by the region of the river known as Pawtucket Falls (see Figure 2.1).

2.2 Topography

The average elevation at the site is 112 ft MSL. The area generally slopes toward the east and north and consists of gently rolling hills with elevations ranging from 200 to 350 ft MSL with numerous ponds in the lower areas. The river valley is quite narrow and rather shallow in most areas and winds through the city in an eastward direction. No abrupt topographical features exist in the 0- to 5-mi range from the site.

2.3 Demography

The population of the city of Lowell was 92,418 in a 1980 census. The area within 1 mi of the reactor had 25,000 permanent inhabitants (from parts of Lowell and the town of Dracut) and ~2,000 UL students.

The campus dormitories and the beginning of the residential areas are located about 600 ft from the reactor. Buildings closer than 600 ft are classrooms, laboratories, and athletic facilities. These buildings, are generally occupied during normal school hours.

2.4 Nearby Industrial, Transportation, and Military Facilities

VFW Highway is about 140 ft east of the Pinanski Building. However, there is no access to the North Campus by this highway. There are no main railroad lines near the campus.

There are no heavy industries or military facilities in or near the campus. There is light industry southeast of the campus along the river. The regional airport is Logan Airport in Boston, which is more than 20 mi from the campus.

2.5 Meteorology

The average annual temperature is 50°F with recorded extremes of 103°F and -29°F, although recent extremes are less severe. The average annual precipitation is 43.3 in including 63.0 in. of snowfall.

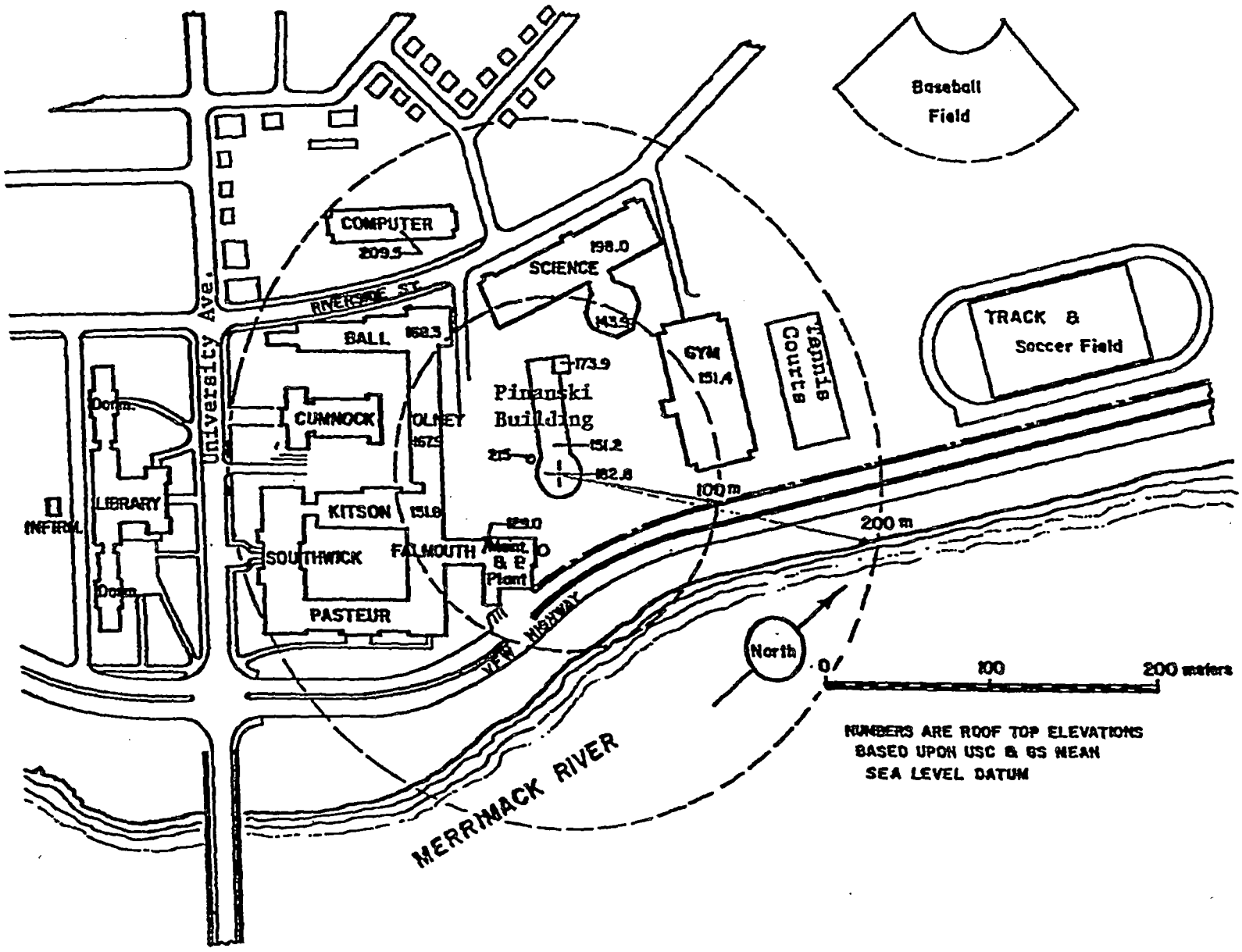

Figure 2.1 Site map with building heights and reference radii

In general, the prevailing winds are westerly with occasional northeasters. Wind speeds of 10 mph or higher occur more than 25% of the time, while calm conditions (less than 1 mph) occur approximately 5% of the time. It is estimated that frequency of temperature inversion is about 30% of the year.

2.6 Geology and Seismology

The University of Lowell site is in the New England-Piedmont Tectonic Province, which is comprised of Precambrian and Paleozic basement and sedimentary rocks that have been extensively folded, faulted, metamorphosed and intruded by igneous rocks during successive episodes of orogenic activity. There is no evidence that the faults in the area are capable.

The largest magnitude earthquake (5.7) known to have occurred in the New England-Piedmont Tectonic Province was the New Brunswick Canada earthquake of January 9, 1982, which is reported to have had a maximum modified Mercalli intensity (MMI) of VI.

Although eastern Massachusetts has experienced relatively higher seismic activity historically than other areas of the northeastern United States, the vicinity around Lowell, about 25 mi in radius, has experienced only small to moderate earthquakes. Historically the largest intensity event in this vicinity was reported as MMI VI.

The reactor building foundation, the pool, the reinforced-concrete parts of the reactor building and the steel containment have been designed to withstand 0.1 g acceleration. The trend of the mean of the relationship between MMI and horizontal peak ground acceleration developed by Trifunac and Brady (1975) estimates a peak ground acceleration of 0.65 g corresponding to an MMI of VI.

U.S. Geological Survey Open-File Report 82-1033 estimates a return period of about 100 years of accelerations of about 0.06 g in the Lowell region. The likelihood of exceeding the design acceleration of 0.1 g during the operating life of the facility as a result of an earthquake appears to be relatively low.

2.7 Hydrology

Drainage in the Pawtucket Falls area is directly toward the Merrimack River. Average and minimum flow rates of the river measured at the Lowell Gauging Station between 1925 and 1976 were 6,540 cfs and 181 cfs, respectively. During the record flood of 1936, the flow rate was 157,439 cfs.

The reactor building is 300 ft from the Merrimack River, and, using the Corps of Engineer's estimated flood stage, the basement of the reactor building is approximately 18 ft above the potential flood elevation. Therefore, it is considered that there is no risk of flooding the reactor.

2.8 Conclusion

On the basis of the above considerations for both natural and man-made hazards, the staff concludes that there is no significant risk associated with the site that would make it unacceptable for the continued operation of the reactor.

3 ENVIRONMENTAL EFFECTS OF DESIGN OF STRUCTURES, SYSTEMS, AND COMPONENTS

This section describes the design of structures, systems, and components important to safety and the impact on them of naturally occurring events.

3.1 Reactor Containment Building

The ULR containment building is connected to a structure (the Pinanski Building) that houses the radiation laboratory of which the ULR is a part. Figure 3.1 is an elevation view of the ULR and the Pinanski Building; Figure 3.2 is a plan view of the ULR and the Pinanski Building.

The ULR containment building is a welded steel, cylindrical shell with a flat bottom and a domed top. The flat bottom and the cylindrical walls are lined with 2.5 ft and 2 ft of concrete respectively. The inside diameter is ~80 ft. The domed ceiling, ~25 ft high, is insulated with 2 in. of fiberglass that is sealed to provide a continuous vapor and dust barrier. A concrete pad foundation is attached firmly to the bedrock beneath the flat steel bottom.

The containment shell includes several safety features, such as pressure relief valves, vacuum valves, air locks, and penetration seals. Design stresses were in accordance with the ASME Boiler and Pressure Vessel Code, Section B, "Rules for Construction of Unfired Pressure Vessels." Design and construction of the containment vessel used standard industry practice and codes.

This gas-tight cylinder encloses the reactor pool and all necessary auxiliary facilities, including the control room and storage spaces for all radioactive materials. The building is penetrated by two sets of personnel air locks, a truck entrance hatch, ventilation ducts, electrical conduits, and piping. All pipe and duct penetrations are welded to the steel shell or pass through special air-tight fittings that are welded to the steel shell. All electrical conduit penetrations are sealed with epoxy resin or similar material.

The free internal volume of the reactor containment building is about 335,000 ft^3. Ventilation air is supplied at about 14,500 ft^3/min, and the exhaust blower exhausts air at about 15,000 ft^3/min so that a slight negative pressure is maintained within the building.

There is reasonable assurance that the containment vessel can successfully withstand any natural or accident conditions and still perform its intended design functions.

3.2 Wind Damage

Meteorological data from the Lowell area indicate a relatively low frequency of wind speeds in excess of 15 mph and an extremely low occurrence of hurricanes. In addition, the reactor is contained within a steel containment structure that has been designed to withstand extremes of natural occurrence, such as high wind speed. Therefore, the staff concludes that any damage to the ULR from the wind is unlikely.

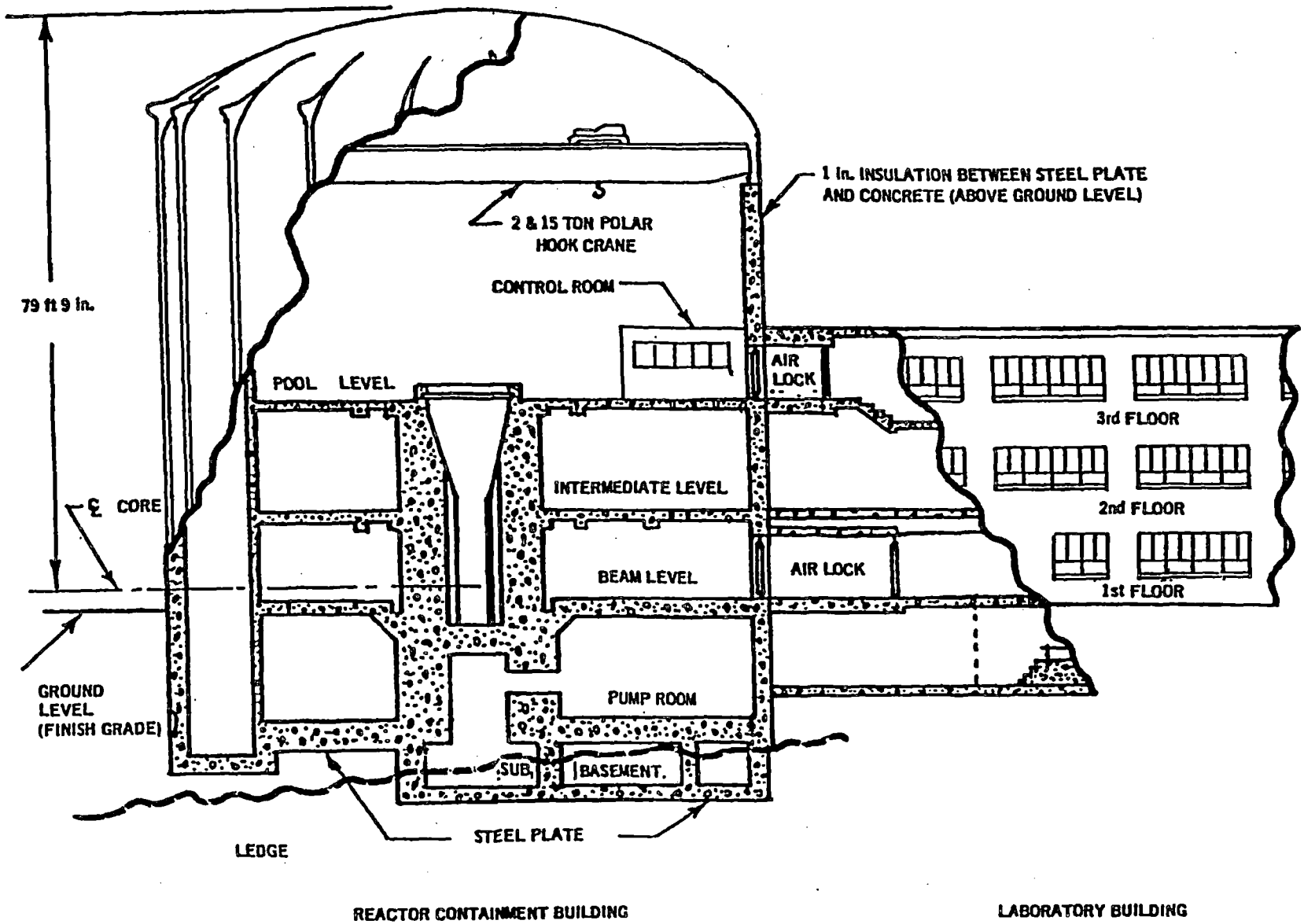

Figure 3.1 Elevation view of the ULR and Pinanski Building

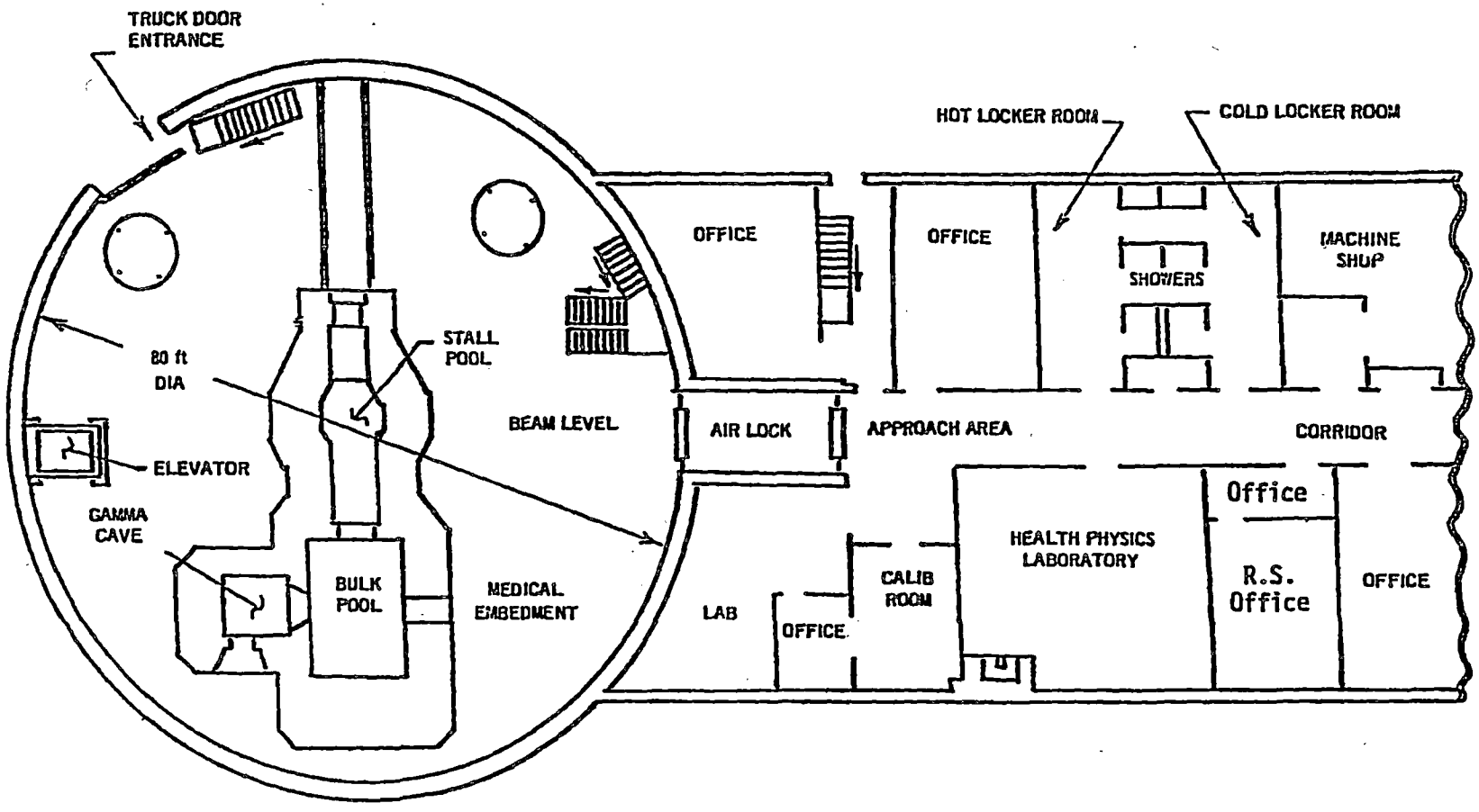

Figure 3.2 Plan view of the Pinanski Building

3.3 Water Damage

As stated in Section 2, the basement of the reactor building is approximately 18 ft above maximum flood level; therefore, the reactor would not be affected by any flooding conditions.

3.4 Seismic-Induced Reactor Damage

The design and construction of the reactor and the containment structures will accommodate an earthquake-induced load of 0.1 g based on MMI VII. These design conditions, the low intensity and frequency of seismic events in that region, the absence of fuel melting associated with various postulated accidents (see Section 14), and the knowledge that postulated mechanical damage to the fuel would release only a small fraction of the fission product inventory to the containment vessel, provide reasonable assurance that the risk to the public resulting from any seismic-induced damage to the reactor facility is not significant.

3.5 Mechanical Systems and Components

The mechanical systems of importance to safety are the neutron-absorbing control rods suspended from the superstructure. The motors, gear boxes, electromagnets, switches, and wiring are above the level of the water and readily accessible for testing and maintenance. The staff has addressed the effects of aging on the performance of these compoments in Section 17.

3.6 Conclusion

The ULR facility was designed and built to adequately withstand all credible and likely wind, water and seismic damage associated with the site. The considerations above indicate that a hurricane or seismic event would have relatively small consequences to the reactor. In addition, the design and performance of the safety systems have been proven for more than 10 years. Accordingly, the staff concludes that the design of the reactor, the containment vessel, and the reactor safety components are adequate to ensure that continued operation will not cause a significant risk to the health and safety of the public.

4 REACTOR

The University of Lowell reactor (ULR) is an open-pool-type reactor using up to 3.5 kg of ^{235}U fuel enriched to ~93%. It is a light-water moderated, water- and/or graphite-reflected reactor licensed to operate at power levels up to and including 1000 kWt. The fuel, core configuration, safety rods and control instrumentation are similar to those used in about 75 research reactors operating throughout the world. At least 30 MTR-type reactors have been evaluated and licensed by the AEC/NRC.

The reactor core is immersed in a reinforced-concrete, water-filled pool. The pool is spanned by a movable bridge structure that supports the reactor core, control rod systems, and reactor instrumentation. The reactor assembly and arrangement is shown in Figure 4.1. Reactor control is achieved by inserting or withdrawing neutron-absorbing rods suspended from the drive mechanisms.

The ULR generates no electricity and is used primarily for class instruction, student experiments, reactor operator training, research, and radioisotope production. Heat generated by fission is transferred from the fuel to the pool water. The design and performance characteristics of the ULR are summarized in Table 4.1.

4.1 Reactor Core

The core normally consists of 26 MTR-type fuel elements, control rods (four safety rods and a regulating rod),* and 26 reflector elements. Several different fuel loadings are possible with this reactor. An aluminum grid box containing a 7-by-9 array of 3-in. modules permits various configurations of fuel elements, control rods, neutron source, nuclear instrumentation, graphite reflectors, and the experimental apparatus (see Figures 4.2 and 4.3).

4.1.1 Fuel Elements

The fuel elements are assemblies of fuel-bearing plates. Each plate is a sandwich of aluminum cladding over a uranium-aluminum alloy "meat." The meat is approximately 0.012 in. thick, 2.5 in. wide, and contains about 7.5 g ^{235}U. The cladding is 0.024 in. thick. The active fuel region of a fuel plate is approximately 2.79 in. wide, 24 in. long, and 0.06 in. thick.

The standard fuel element consists of 18 fuel plates fastened to aluminum side plates so that the finished element has almost a 3-by-3-in.-square cross section (Figure 4.4). Two identical end boxes position the fuel element in the grid box and provide handles for inserting and removing the fuel element. Including end boxes, the elements are nearly 40 in. long. Half-load fuel elements (identical to standard fuel elements except that each plate has one-half the uranium loading) and variable-load fuel elements (identical to standard fuel elements except that the plates are removable) also are available for use.

---

*All licensee documents refer to safety rods as control rods. Regulating rods remain non-scrammable control rods.

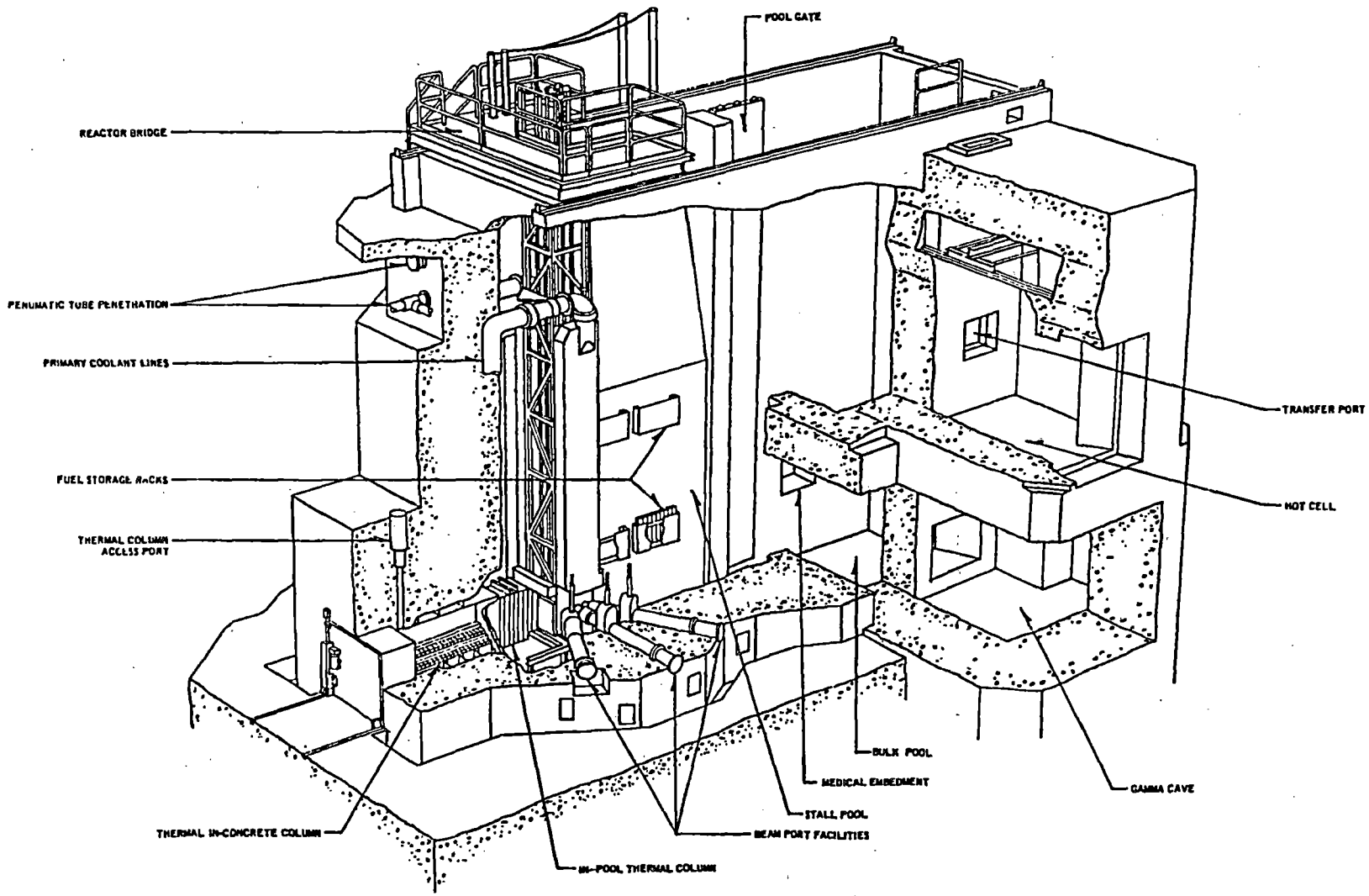

Figure 4.1 Reactor assembly and arrangement

Table 4.1 Current ULR design and performance characteristics

Parameter	Description
General Features	
Reactor type	Heterogeneous pool
Licensed rated power level	1000 kWt
Maximum excess reactivity	4.7% $\Delta k/k$
Clean-cold core loading (26 elements)	3.51 kg ^{235}U
Effective prompt neutron lifetime	7.2×10^{-5} s
Effective delayed neutron fraction (β)	0.7% $\Delta k/k$
Temperature coefficient	-0.88×10^{-4}% $\Delta k/k$ per degree C
Void coefficient (core average)	-2.2×10^{-3}% $\Delta k/k$ per % void
Average thermal flux at 1000 kW, water reflected	8.6×10^{12} n/cm^2/s
Moderator/coolant	H_2O
Reflector	H_2O and graphite
Fuel Elements	
Fuel	U-Al alloy (24 wt% U)
Enrichment	93% ^{235}U
Number of fuel elements (nominal)	26
Number of fuel plates/element (nominal)	18
^{235}U per plate	7.5 g
Plate Dimensions	
Plate thickness	0.15 cm
Clad thickness	0.06 cm
Plate width	7.09 cm
Active fuel length	60.96 cm
Water gap	0.25 cm
Control Rods and Reactivity Effects	
Material	Boral (minimum 35 wt% boron)
Safety	Four 26.92 cm-wide vertical-blades
Regulating	One 6.35-cm^2 vertical rod
Withdrawal speed (maximum)	
Safety	9.40 cm/min
Regulating	198.12 cm/min

Table 4.1 (continued)

Parameter	Description
Rod worth (current core)	
Safety (range for rod of maximum worth)	3.0%--4.1% Δk/k
Safety rod 1	1.98% Δk/k
Safety rod 2	2.81% Δk/k
Safety rod 3	2.74% Δk/k
Safety rod 4	3.72% Δk/k
Safety (total)	11.25% Δk/k
Regulating	<0.7% Δk/k
Maximum allowed rod drop time	1.0 s
Minimum shutdown margin (relative to cold, clean core loading) with max worth rod stuck out	2.7 % Δk/k
Coolant	
Type	Light water
Flow	1600 gal/min
Inlet core temperature (nominal)	29°C
Inlet core temperature (maximum)	~32°C
Outlet core temperature (nominal)	31°C
Outlet core temperature (maximum)	~38°C
Conductivity	≤5 μmhos/cm

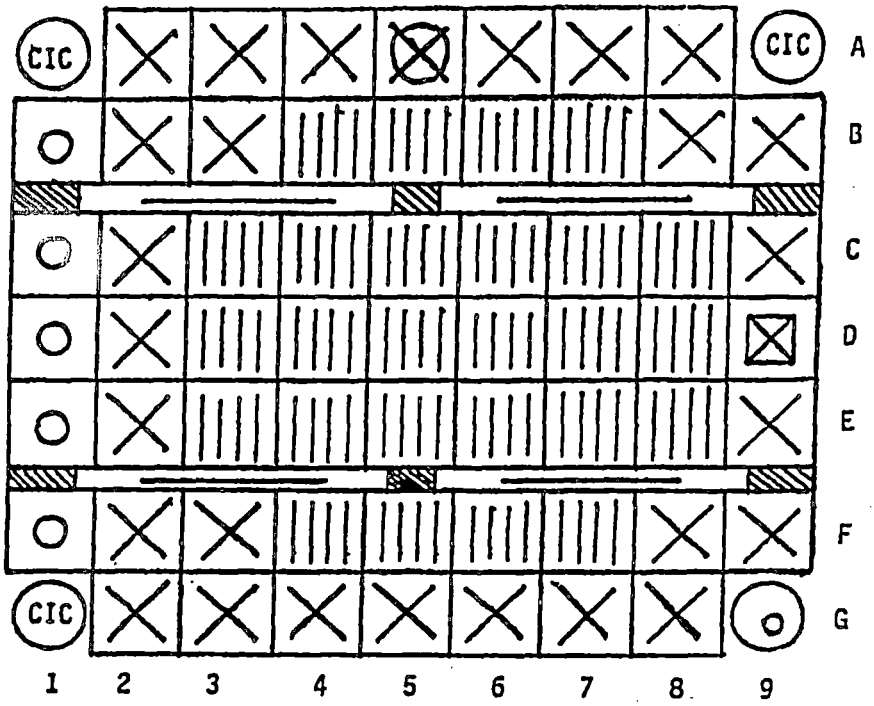

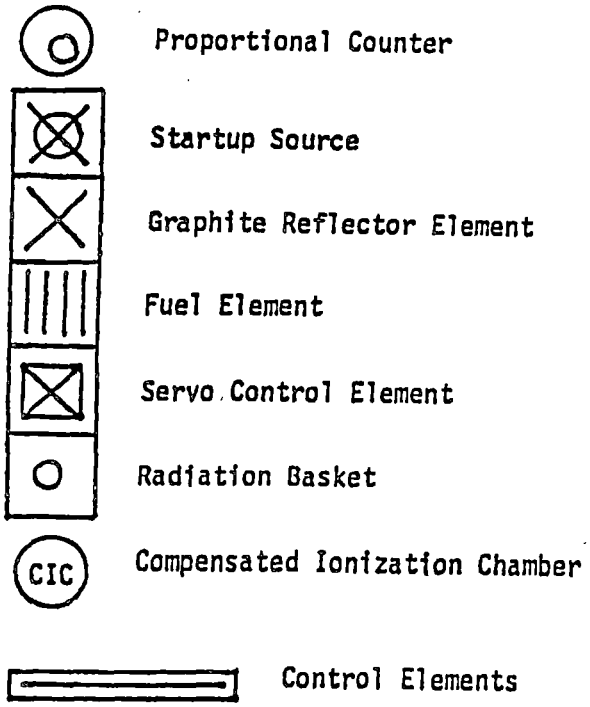

Figure 4.2 Core arrangement

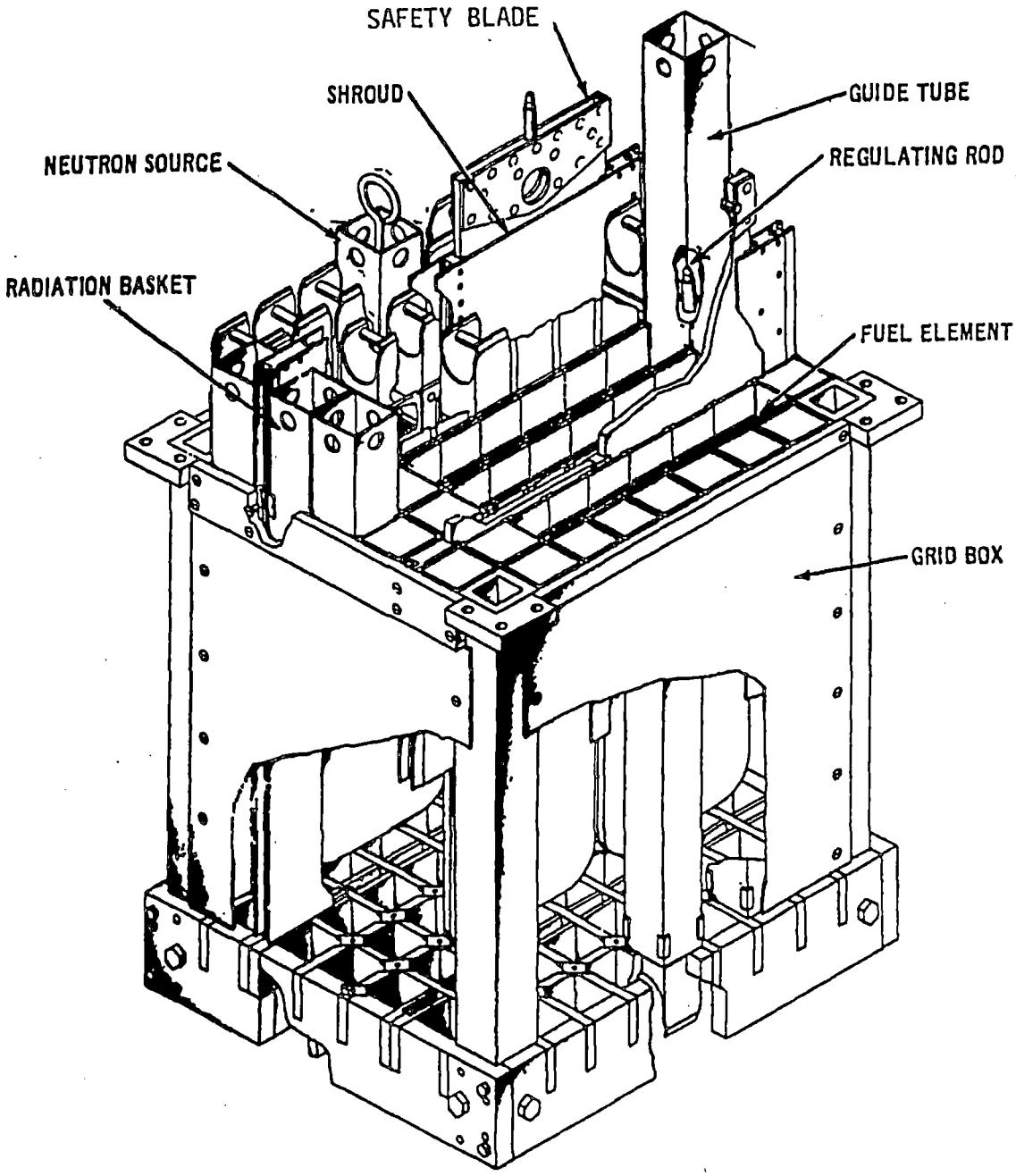

Figure 4.3 Reactor core

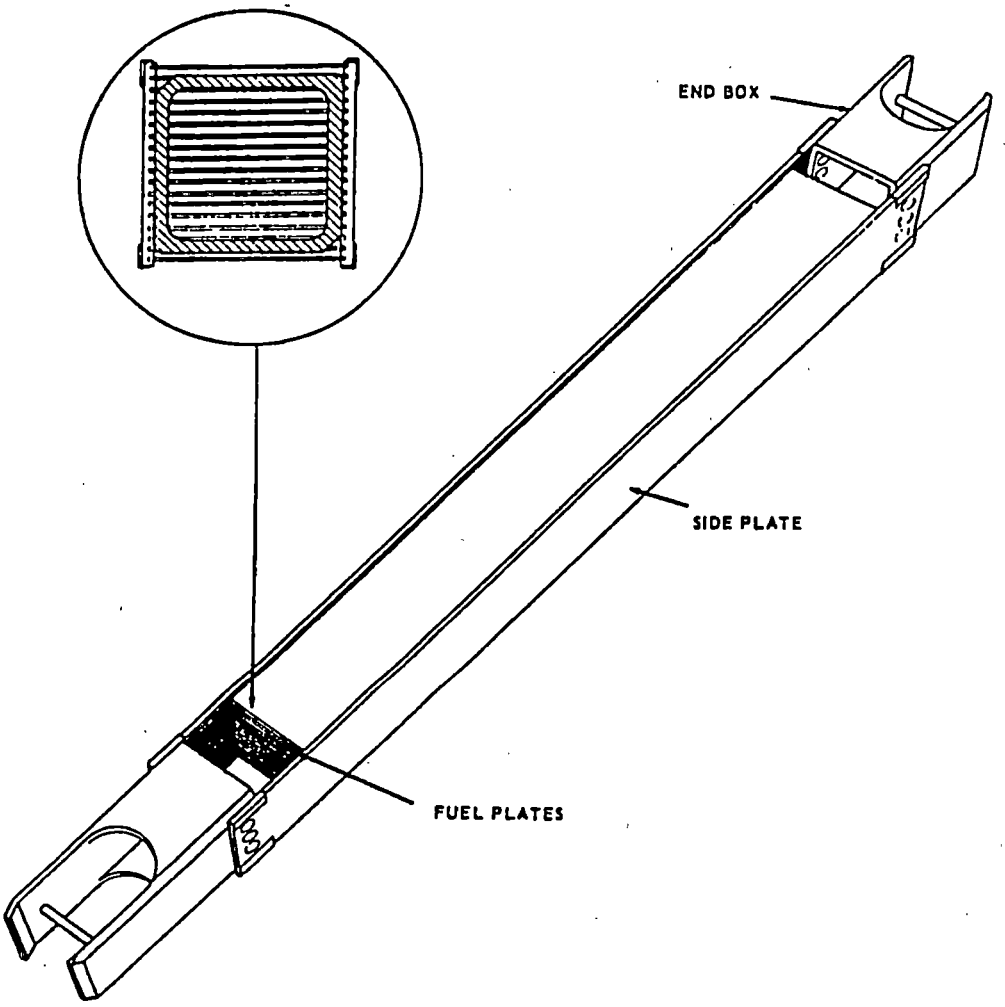

Figure 4.4 Fuel element

4.1.2 Control Rods

The reactivity and power level in the ULR are controlled by four safety rods and one regulating rod. Figure 4.5 is a sectioned view of a safety rod and a regulating rod. The safety rods, which are used for coarse control, are made of Boral (a mixture of 35-50 wt% boron carbide and aluminum) and are clad with aluminum. The absorbing section is about 0.26 in. thick, 10.6 in. wide, and 25 in. long and is clad with 0.06-in.-thick aluminum. Each safety rod shroud consists of two thin aluminum plates 0.12 in. thick, 38 in. high, and separated by aluminum spacers to provide a 0.125-in. water gap around the control rod. The shrouds act as guides for the control rods. Small flow holes at the bottom of each shroud minimize the effect of viscous damping on the scram time. The reactivity worth of each safety rod varies with the core loading and configuration; the minimum worth is approximately 2.0% $\Delta k/k$ and the maximum worth is <4.1% $\Delta k/k$. For a normal core loading, the total worth of the four safety rods is about 11.25% $\Delta k/k$. Each safety rod is moved in and out of the core by an individual electromechanical system. The drive mechanisms, which are actuated from the control console, are located on the reactor bridge. The rod, which contains the absorber section, is suspended from the drive mechanism by an electromagnet. During normal operation, the safety rods are driven either in or out at a rate of 3.7 in./min. When a scram signal is received, the magnets are deenergized and the safety rods drop by gravity into the core.

Continuous fine control of the reactor is provided by actuation of an automatic servo-control system on the regulating rod and compensates for small changes in reactivity. The regulating rod is a 25-in.-long, 2.125-in.-square Boral tube with a 0.250-in. wall thickness (including 0.040 in. of aluminum clad on each side). A 3-in.-square, 0.250-in.-thick aluminum shell shroud acts as a guide for the regulating rod. The rod is open at the top and bottom to allow free circulation of water through it to eliminate the possibility of trapping air in the rod with a resultant variable void condition.

The regulating rod has a maximum reactivity worth of about 0.7% $\Delta k/k$. The regulating rod is attached permanently to its drive mechanism and travels in either direction at a speed of 78 in./min. The regulating rod can be operated automatically or manually for servo control of the reactor power level. This rod cannot be detached from its drive mechanism.

4.1.3 Reflector Elements

Each reflector element is a 2.85-in.-square reactor-grade graphite block contained in a 3-in.-square aluminum can and is 30 in. long. The thin-walled aluminum can is evacuated to collapse the walls onto the graphite and thus provide good heat transfer to the pool water. A typical reflector element is shown in Figure 4.6.

4.2 Reactor Pool

The reactor pool comprises two principal sections, a stall pool and a bulk irradiation pool. The stall section of the pool may be separated from the bulk irradiation pool section by an aluminum gate. A rubber gasket around the edges of the gate provides a watertight seal, allowing independent drainage of either pool section. Each section of the pool is equipped with the primary coolant system connections for operation at rated power. The pool walls are constructed of heavy aggregate and ordinary concrete for biological shielding.

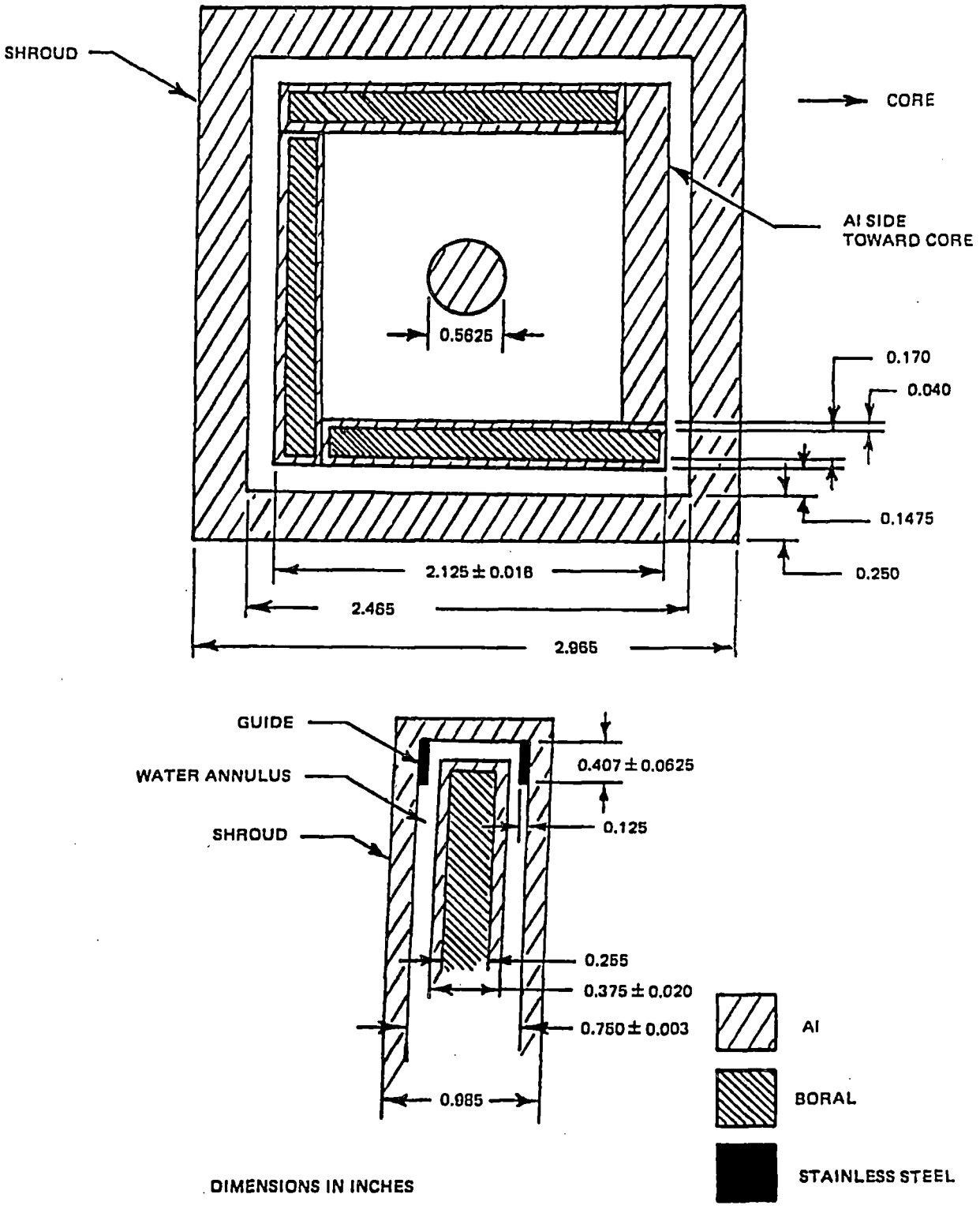

Figure 4.5 Sectioned view of regulating rod and safety rod

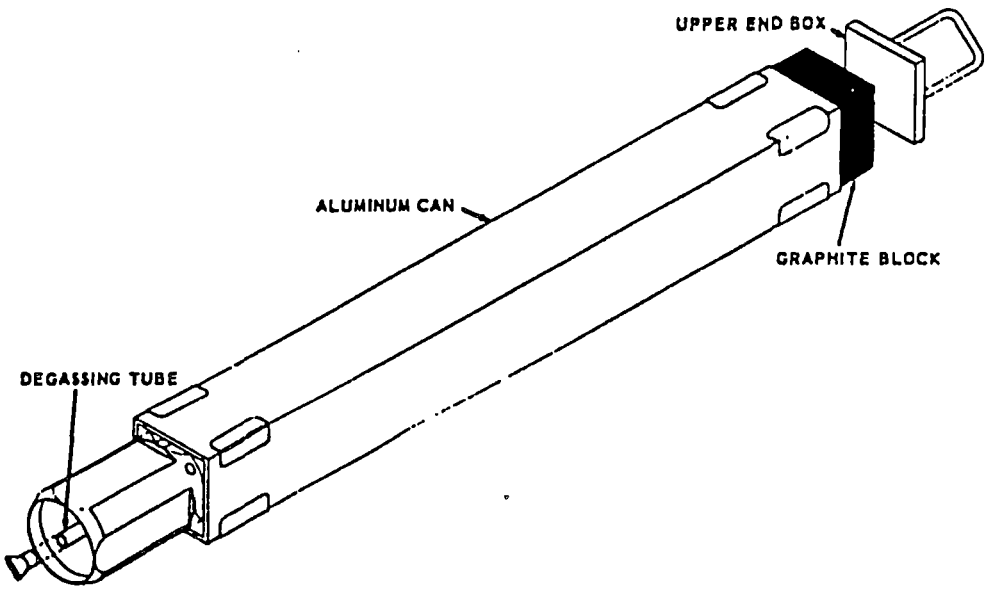

Figure 4.6 Reflector element

The reactor core is shielded in the lateral direction by the pool water and the concrete walls of the pool. Vertical shielding is provided by about 24 ft of water above the core and 5 ft of water between the core and the pool floor. The pool walls are constructed of heavy aggregate and ordinary concrete with a thickness ranging from about 4 ft at the top of the pool to a minimum of 6 to 8 ft at the bottom of the pool in the core region. The wall thickness increases in steps from the top of the pool to the bottom of the pool. Additional shielding between the reactor and the external environment is provided by the 2-ft-thick concrete that lines the reactor building walls.

The penetrations in the pool wall are seal welded to a 0.25-in.-thick aluminum liner. The penetrations located in the stall pool walls include six beam ports, two pneumatic tubes, and a thermal column. The penetrations located in the bulk irradiation pool walls are the hot cell and gamma cave. Fuel storage racks are provided along the walls of the stall pool and the bulk irradiation pool. It is possible to locate all of the storage racks at either end of the reactor pool.

4.3 Reactor Support Structure

The reactor grid box is supported by an aluminum suspension frame hung from a bridge that spans the width of the pool (Figures 4.1 and 4.7). The bridge consists of two separate sections of structural framework set horizontally one above the other and supported on each side of the pool by a two-wheel, rail-mounted truck assembly that allows the bridge to be positioned at any desired location over the reactor pool. The lower section supports the weight of the suspension frame and core; the upper section allows access to the entire reactor. A hand crank and gear drive are provided for moving the bridge at a rate of 1.5 in. per full turn. The bridge is interlocked to prevent any movement while the control rods are withdrawn.

The core suspension frame is an aluminum rectangular column built of four square corner posts with cross braces and stiffeners on three sides, thus forming a rigid structure. The open side allows for the fuel to be manipulated. An ion chamber is located in each of three corner posts, and the startup counter is located in the fourth corner post. A locating plate that spans the upper end of the suspension frame serves as a mounting for the startup counter drive, the regulating drive, and the control rod drives. In the normal operating position, the tower assembly is adjacent to the thermal column and the beam tubes. Stops are provided on the bridge rails to limit bridge travel within the pool area. The reactor's vertical position is fixed; the centerline of the core is about 6 ft above the pool floor. With this core elevation, the centerline of the active fuel region is about 25 ft below the surface of the water when the pool is full.

4.4 Reactor Instrumentation

The reactor instrumentation is similar to that found at research reactor installations at other laboratories. The control console and associated instruments are typical of those of several research reactors built by the same vendor. During the past few years, the instruments have been improved or replaced to provide technically up-to-date equipment.

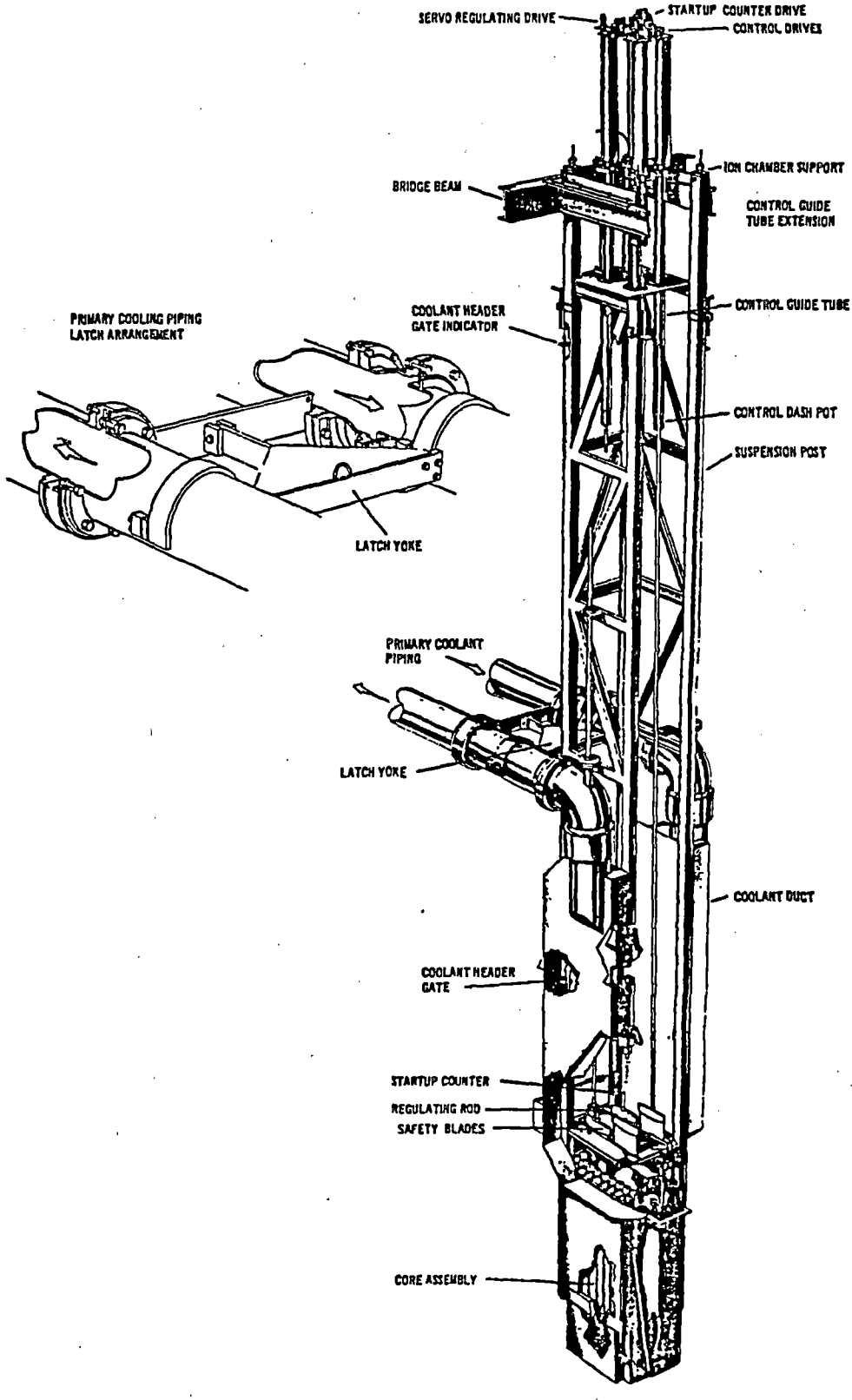

Figure 4.7 Core support structure

The nuclear instrumentation provides the operator with necessary information for proper manipulation of the controls. The following instrument channels are provided to monitor reactor parameters and are discussed in more detail in Section 7.

(1) count-rate or startup channel (proportional counter)
(2) linear power and automatic control channel
(3) log power and period channel (intermediate channel)
(4) two safety channels
(5) core inlet and outlet temperatures
(6) primary coolant flow through the core

4.5 Dynamic Design Evaluation

The reactor is provided with redundant rapid-response controls and nuclear instrumentation (see Section 7) for versatile and safe operation. The reactor core system is designed to have negative moderator temperature and void coefficients of reactivity. The ultimate void (total loss of coolant) removes the principal neutron moderator and shuts down the reactor.

The licensee and the staff have performed analyses of reactor dynamic behavior initiated by various changes in reactivity. A detailed evaluation of reactivity insertions is discussed in Section 14.2.

4.5.1 Shutdown Margin

The proposed Technical Specifications prescribe a minimum reactivity shutdown margin of 2.7% Δk/k in a cold, xenon-free core with the highest worth control (safety) rod fully withdrawn. Depending on the core loading, the reactivity worth of this maximum safety rod ranges from about 3.0% Δk/k to 4.1% Δk/k, with a value of 3.7% Δk/k for the existing core. The total worth of all safety rods is about 11.25% Δk/k. Therefore, as long as the total excess reactivity loaded is into the core, including that resulting from all experiments, is no more than 4.7% Δk/k, the shutdown margin of 2.7% can be achieved. The shutdown margin limitation provides adequate flexibility to load sufficient excess reactivity into the core to compensate for the effects of experiments, temperature coefficients of reactivity, and fission product poisoning while still ensuring that the reactor can be controlled under any conditions of operation even if the most reactive safety rod were to fail to insert.

4.5.2 Excess Reactivity

The total excess reactivity authorized in the Technical Specifications for a ULR cold clean core during operation is 4.7% Δk/k. This amount provides for the various negative-reactivity effects associated with operation and use of the reactor as well as for operational flexibility. The typical excess reactivity requirements, as given in the ULR SAR, are as follows:

Xenon override	1.7% Δk/k
Temperature coefficient	0.2% Δk/k
Total	1.9% Δk/k

The operating limitation of 4.5% Δk/k excess reactivity allows up to 2.6% Δk/k associated with experiments, burnup, and fission product poisoning. Although

the fundamental criterion is maintaining ensured capability to shut the reactor down (hence the minimum shutdown margin), imposing a limit on the total excess reactivity as well helps ensure that the SAR analyses are applicable to the operational core.

4.5.3 Experiments

The licensee's Technical Specifications limit the total reactivity worths of all secured and movable experiments to 2.5% Δk/k and limit reactivity insertion rates for experiments with moving parts to less than 0.5% Δk/k. The staff has analyzed these limitations on the basis of information provided by the licensee in the revised SAR and the proposed Technical Specifications.

If this 2.5% Δk/k excess reactivity were added to an operationally loaded cold reactor, the total excess reactivity would be 2.5 + 1.9 = 4.4% Δk/k. This is consistent with the authorized excess reactivity discussed in Section 4.5.2. This also is consistent with the required minimum shutdown margin. In the event that either the shutdown margin or the maximum excess reactivity authorization would be exceeded by a proposed loading of experiments, these limits would prevail.

The proposed Technical Specifications (1) define a movable experiment as one that can be inserted, removed, or manipulated while the reactor is critical and (2) limit the reactivity of such experiments to a 0.1% Δk/k per experiment and limit the total worth of all movable experiments to 0.5% Δk/k. This is well below the 1.5% Δk/k step reactivity insertion limit that has been determined on the basis of the BORAX and SPERT experiments (Dietrich, 1954; Nyer, 1956) and would not result in damage to the ULR MRT-type fuel elements.

The staff has reviewed the proposed limitation on the worth of movable and secured experiments and concludes that they are conservative and provide reasonable assurance that failure of single experiments resulting in positive reactivity insertions would not result in damage to the fuel or reactor components.

4.5.4 Assessment

On the basis of the information presented above, the staff concludes that (1) the limitation of 2.5% Δk/k on the total experiment reactivity worth, (2) a limitation on reactivity worth of each secured experiment of 0.5% Δk/k, (3) a movable experiment limitation of 0.1% Δk/k per experiment with a total reactivity worth limitation of 0.5% Δk/k for all movable and nonsecured experiments, and (4) operation in compliance with the Technical Specifications minimum shutdown margin requirements provide assurance that these experiments will not lead to a reactivity insertion that will cause fuel damage that would pose a threat to the health and safety of the public. In addition, the staff believes that the 2.7% Δk/k shutdown margin with the most reactive rod fully withdrawn is sufficient to ensure that the reactor can be shut down adequately under all likely conditions.

4.6 Functional Design of Reactivity Control Systems

4.6.1 Control Rod Drives

The control rods are driven by electromechanical linear actuators (Figure 4.8). An actuator is essentially a ball-bearing-type screw driven through a gear reduction unit by a low-inertia reversible servo-motor. The drives are coupled to the safety rods by means of electromagnets. The regulating rod control element is attached permanently to its drive mechanism. The drive mechanisms are actuated by switches on the control console. The limits of stroke of the control rods are set by adjustable, cam-operated microswitches mounted on the rod drive mechanism. The four safety rods can be operated only individually. If electrical power is removed from the electromagnets, the safety rods fall into the core by force of gravity.

The control rods have control-console-mounted electronic position indicators that are accurate to ±0.020 in. The four safety rods have control-console-mounted annunciator lights that indicate when either limit of travel has been reached and an annunciator that lights when the rod is in contact with its magnet. The regulating rod has insert and withdraw limit annunciator lights as well as a pair of lights that indicate the direction of the rod movement.

4.6.2 Scram-Logic Circuitry

The ULR is equipped with a scram-logic safety system that receives signals from core instrumentation (neutron flux density detectors) and other reactor parameters to initiate a scram by removing power from the safety rod magnets and/or the safety amplifier.

The reactor conditions that can initiate these scrams are

- high reactor power
- short period
- high pool temperature
- high primary coolant inlet temperature
- high primary coolant outlet temperature
- low flow rate of primary coolant
- low pool-water level
- bridge movement
- seismic disturbance
- open coolant header gates
- high voltage failure
- open thermal column doors
- open containment air lock doors
- operator manual scram

The safety system is discussed in more detail in Section 7.

4.6.3 Assessment

The ULR is equipped with a safety and control system that is typical of nonpower reactors and that incorporates multiple control-safety rods and multiple and redundant sensors that can initiate a scram. There is a sufficient redundancy of control-safety rods that the reactor can be shut down safely even if the most reactive control-safety rod fails to insert upon receiving a scram signal.

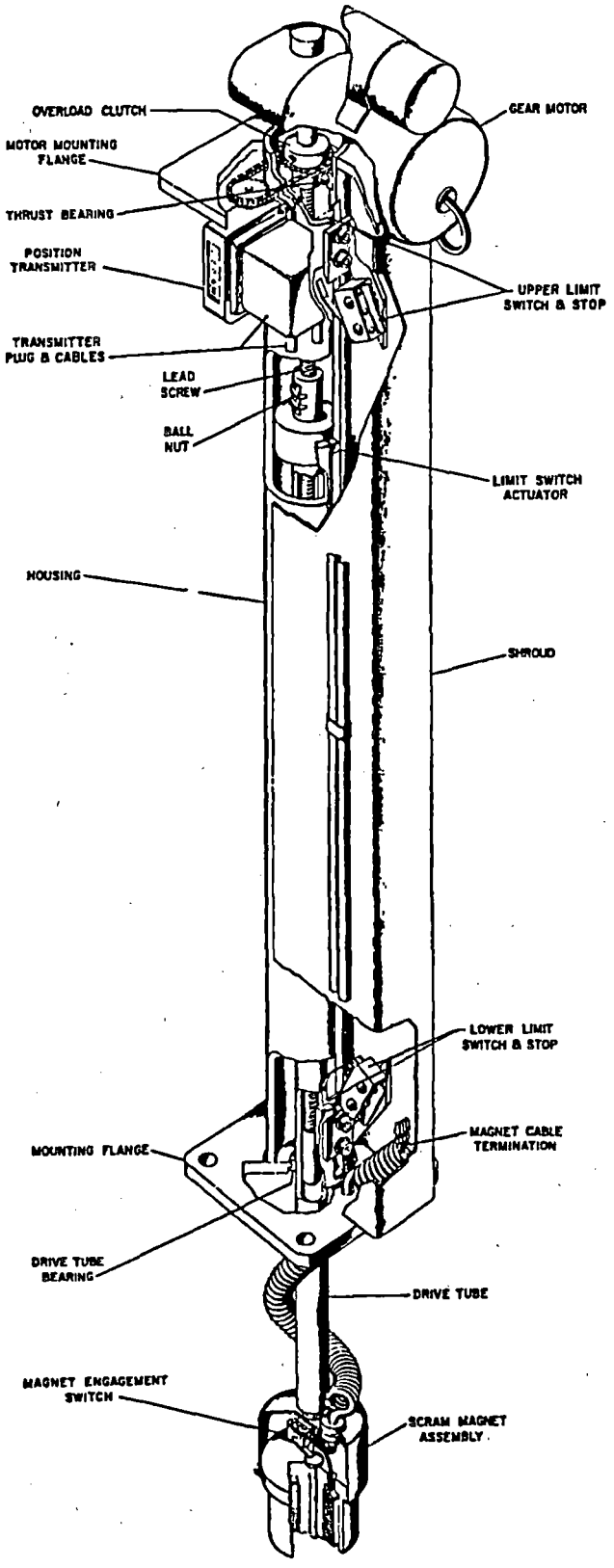

Figure 4.8 Control rod drive

In addition to the electromechanical safety controls for both normal and abnormal operation, the negative bulk temperature coefficient of the moderator provides an inherent backup safety feature.

In accordance with the above and with the details presented in Section 7, the staff concludes that the reactivity control systems of the ULR are designed and will function adequately to ensure safe operation and safe shutdown of the reactor under all operating conditions.

4.7 Operational Practices

The ULR operates under Technical Specifications that direct the review, audit and surveillance of the reactor and provide procedural reviews for all safety-related activities. Written procedures have been established for safety-related and operational activities, which include reactor startup, operation, and shutdown; maintenance; and calibration of equipment and instrumentation. In addition, the reactor is operated by NRC-licensed personnel in accordance with the requirements of 10 CFR 55.

4.8 Conclusion

The staff's review of the reactor facility has included studying its specific design, installation, and operational limitations as identified in the Technical Specifications and other pertinent documents associated with the reactor. The staff concludes that the ULR is designed and built according to good industrial practices. It consists of standardized components representing many reactor-years of operation and includes redundant safety-related systems. On the basis of the staff's review of the ULR and its experience with similar facilities, the staff concludes that there is reasonable assurance that this reactor is capable of safe operation as limited by its proposed Technical Specifications.

5 REACTOR COOLING SYSTEMS

Reactor cooling is accomplished by the primary cooling system, secondary cooling system, primary coolant purification system, and makeup water system. A schematic of the reactor cooling system is shown in Figure 5.1.

5.1 Primary Cooling System

The reactor may be operated in any location in the pool at power levels up to 100 kW with natural convection cooling. The only limitation in this mode is that the pool water temperature cannot exceed 108°F. If this temperature is approached, either the reactor power must be reduced or the primary and secondary cooling systems must be operated.

When the reactor is operated at power levels above 100 kW, it must be in either the No. 1 position (centered in the stall pool) or the No. 2 position (centered in the bulk pool). Before the reactor can be operated in either of these positions, the primary coolant spools on the core support structure must be inserted into the primary coolant inlet and outlet piping in the pool wall and latched.

In the forced-convection cooling mode, primary coolant flows from the reactor to a 3000-gal holdup tank, where it remains for ~90 s for ^{16}N and ^{19}O decay. From there it flows through the primary pump, through the tube side of the system heat exchanger, and back to the reactor inlet pipe. The coolant then flows down the inlet flow channel forming one side of the reactor suspension frame and into the plenum above the core. From here it is forced down through the core flow channels into the outlet plenum and into the primary coolant piping.

An alternate forced-convection mode, referred to as the cross-stall mode, is used to reduce core vibration. In this mode, the reactor is stationed at position No. 1, but the primary system valving is arranged so that the coolant returns into the bulk pool (position No. 2), flows into the stall pool, flows into the plenum above the core, and flows down through the core flow channels.

5.2 Secondary Cooling System

The secondary cooling system circulation pump takes coolant from the cooling tower sump and forces it through the shell side of the heat exchanger and back to the cooling tower. Secondary system makeup water is supplied by the city water system. Constant blowdown from the cooling tower sump and appropriate chemical treatment prevents secondary system component corrosion, scaling, and algae growth. The secondary system is at a higher pressure than the primary; thus any heat exchanger leakage would be into the primary system.

5.3 Primary Coolant Purification System

Approximately 40 gal/min of primary coolant is tapped off the line between the heat exchanger and the pool and pumped through a mixed-bed regenerative demineralizer. From the demineralizer, the coolant flows through a filter and is then returned to the reactor pool. The pool cleanup demineralizer produces an effluent with a specific resistance in excess of 10^6 ohm-cm.

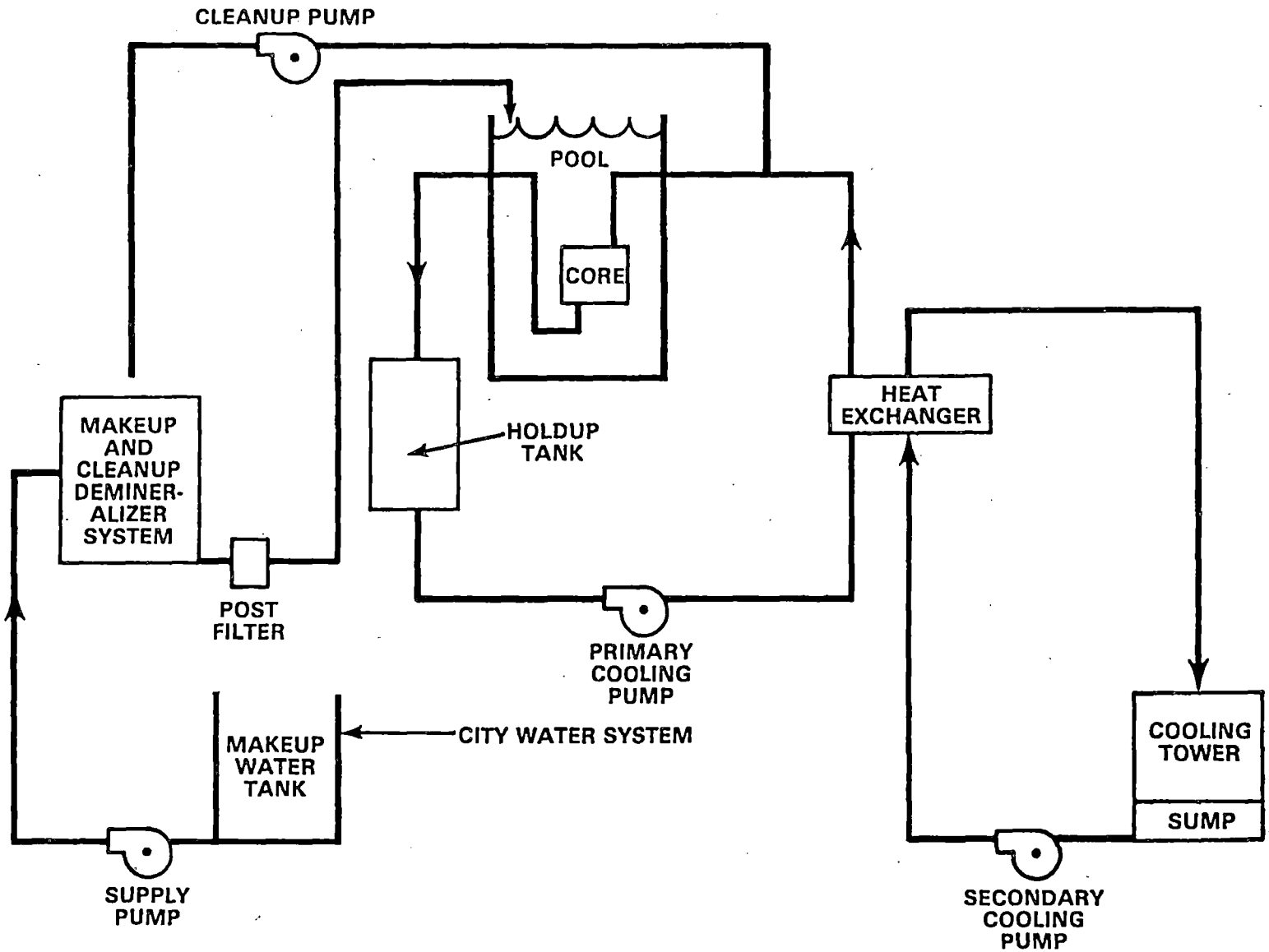

Figure 5.1 Reactor cooling system

5.4 Makeup Water System

Makeup water to replace primary coolant lost by evaporation or leakage is pumped from a 1000-gal storage tank (filled from the city water system) to a dedicated mixed-bed regenerative demineralizer. From the demineralizer, the makeup water enters the primary purification system upstream of the postfilter described in Section 5.3.

5.5 Conclusion

The staff concludes that the reactor cooling system is adequate to prevent fuel element overheating under all normal and likely off-normal operating conditions and that the coolant purification system can prevent both corrosion and radioactivity problems associated with potential coolant contamination.

6 ENGINEERED SAFETY FEATURES

Engineered safety features are systems provided to mitigate the radiological consequences of accidents. The engineered safety features at the ULR are the reactor containment structure, the ventilation system, and the emergency power system.

6.1 Reactor Containment

The reactor containment building is a welded steel shell with a flat bottom, cylindrical sides, and a domed top. The flat bottom of the shell is lined with 2-1/2 ft of poured concrete, and the cylindrical walls are lined with 2 ft of poured concrete to serve as a ballistic and radiation shield and as structural support for the 15-ton polar crane. The reactor containment building is shown in Figures 3.1 and 3.2.

Access into the containment building is through one of two air locks, each equipped with two pneumatically sealed doors. A pneumatically sealed truck door may be opened only when the reactor is shut down. All ventilation ducts, piping, and electrical penetrations through the containment are welded to the steel shell.

The containment building was designed and tested to ensure that a 2-psi internal pressure would cause a leak rate of <10% of the building volume over a 24-h period. Periodic pressure testing verifies the preservation of building integrity.

6.2 Ventilation System

A schematic of the ULR ventilation system is shown in Figure 6.1. Under normal operation, about 14,500 ft^3/min of outside air is drawn in through heating, cooling, and reheating coils by the ventilation blower and distributed throughout the containment building. The building exhaust blower draws about 15,000 ft^3/min of air from areas throughout the containment building and discharges it out the 100 ft-high facility stack. Separate blowers take air from areas with high potential for radioactive gas release and discharge it into the building exhaust duct downstream of the main exhaust blower The somewhat higher capacity of the exhaust blower over the inlet blower causes a slight negative pressure in the reactor building. When the reactor operator or reactor supervisor initiates an emergency radiation alarm, when there is a loss of power, or when unusually cold temperatures cause the ventilation freeze alarm to trip, all the valves in the ventilation ducts at the containment boundary close, isolating the building. The exhaust blowers also shut off at the same time. On a radiation alarm, the supply blower continues to operate, discharging outside air up the stack through valve F (see Figure 6.1), which opens on the emergency signal.

A separate emergency exhaust system is initiated automatically by a positive containment building pressure of >0.25 in. of water. This emergency system is intended to relieve small overpressures accompanied by airborne radioactivity in the containment building by passing contaminated air through high-efficiency

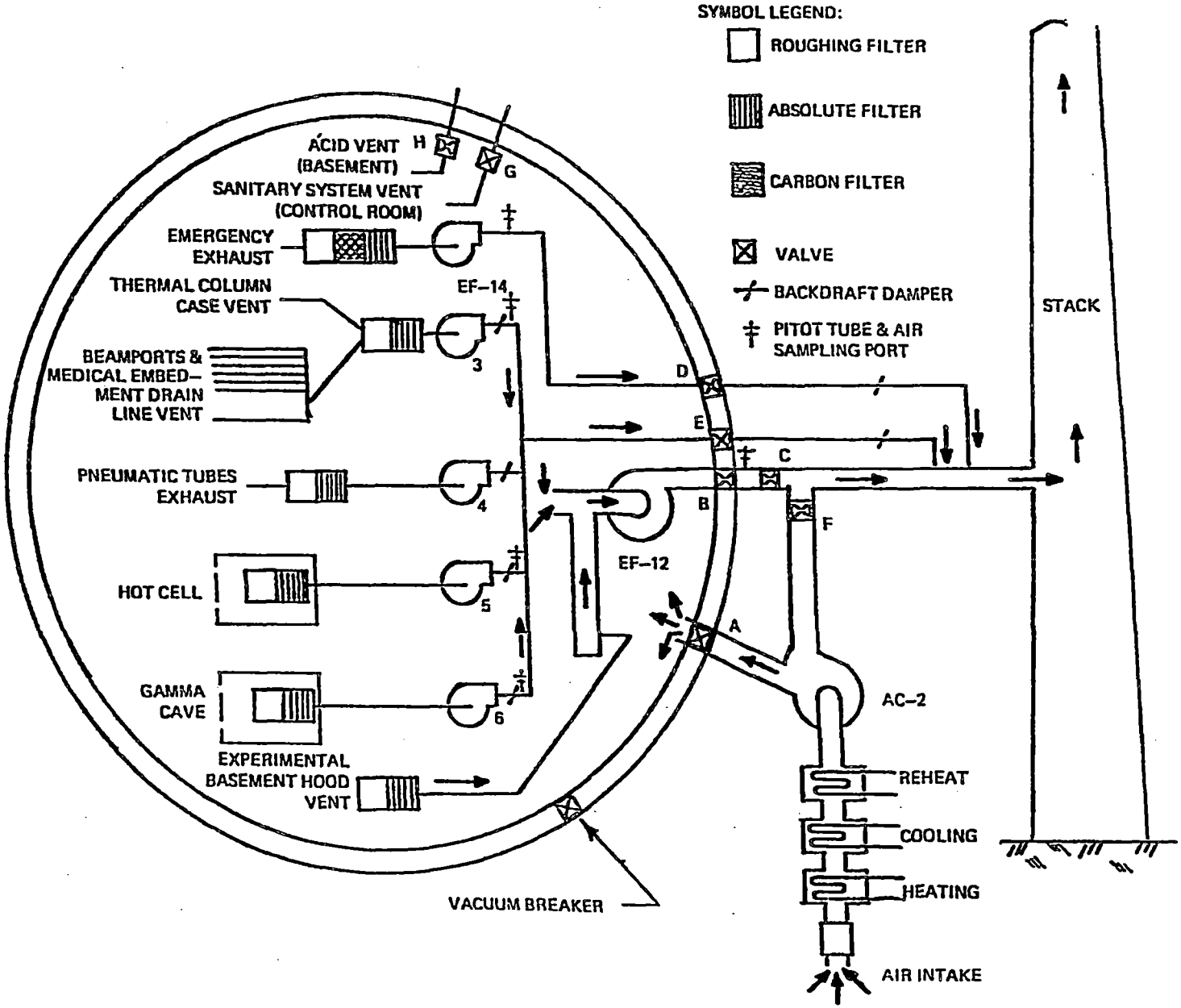

Figure 6.1 Ventilation schematic

particulate air (HEPA) filters and charcoal filters before releasing the air to the stack. Emergency exhaust air carried to the stack is diluted by the high volume (nominally 14,500 ft^3/min) of air being fed up the stack from the building supply fan through bypass valve F.

6.3 Emergency Power System

A 70 kW natural gas emergency power generator is located in the Pinanski Building. It supplies 3-phase, 277/480-V to the equipment listed in Table 6.1. Generator starting is by a 24-V battery system that is maintained at full charge by a trickle charger fed by house power. Accident analyses (see Section 14) did not consider the use of emergency power. The consequences of a loss of power would have no effect on fuel integrity and would result in no exposure to operating personnel or the public.

6.4 Conclusion

The staff concludes that the ULR engineered safety features are adequate to mitigate the consequences of any of the possible accidents described in Section 14.

Table 6.1 Emergency generator use

System Powered	Approximate Power Required (kW)
Ventilation supply fan AC-2	15
Radiation monitor system	3.6
Emergency horns, flashing lights, etc.	1.1
Emergency exhaust system	7.5
Emergency reactor lighting	4
Intercom and public address systems	0.5
Console power	2.3
Nuclear instrumentation	2.3
Process control cabinet	2.3
Compressor motor in reactor	1.5
Airlock doors (during operation)	2.3
Fire alarm	2.3
Compressor motors in fan room	4.6
Nuclear center emergency requirements	7
Accelerator emergency requirements	5
Delayed automatic reset	

7 CONTROL AND INSTRUMENTATION

The control and instrumentation systems at the ULR facility are similar to those in wide use in other research reactors in the United States. Control of the nuclear fission process is achieved by using four safety (scrammable) rods and one regulating rod. The instrumentation system, which is interlocked with the control system, is composed of nuclear and process instrumentation and generally is characterized by state-of-the-art components. The licensee has a program in operation to replace older instruments with newer systems that provide the same functions more reliably. The required safety instrumentation systems are summarized in Table 7.1.

7.1 Control System

The control system is composed of both nuclear and process control equipment in which safety-related components are designed for redundant operation so that a single failure or malfunction of components will not prevent the safe operation or shutdown of the reactor.

7.1.1 Nuclear Control System

The reactor is controlled by inserting and withdrawing four neutron-absorbing safety rods using control drive units mounted on the bridge over the pool. The safety rods are attached to electromagnets so that any electrical power interruption will result in the elements falling by gravity into the core, causing a reactor scram. The regulating rod has a solid coupling and cannot be scrammed. The safety and regulating rod drives are controlled from the control room by the reactor operator. The control rod systems are discussed in more detail in Section 4.

7.1.2 Supplementary Control Systems

These control systems, also called process control systems, are designed to control the various processes involved in reactor operation, but do not relate directly to safety. Included in this category are controls for various pumps and blowers. These control systems ensure proper operation of these systems that are not nuclear related.

7.2 Instrumentation System

The instrumentation system is composed of both nuclear control and process instrumentation circuits. The electronics system contains both solid-state and tube-type components and provides annunciation and/or indication in the control room. The automatic scram functions through the trip actuator amplifier are discussed below.

7.2.1 Nuclear Instrumentation

The following nuclear instrumentation provides the operator with the information necessary for proper manipulation of the nuclear controls. The instrumentation is shown schematically in Figure 7.1.

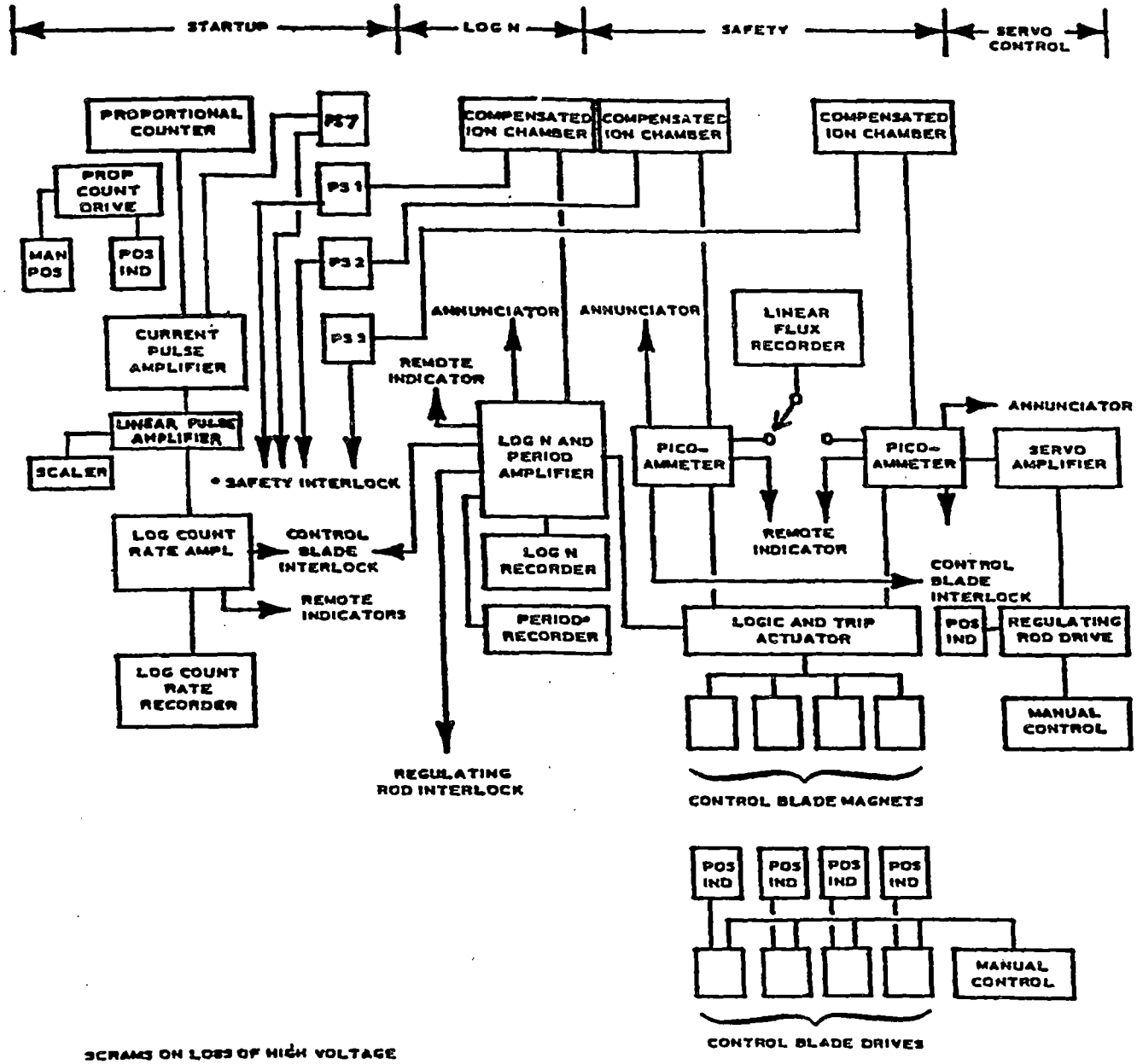

Figure 7.1 Reactor controls and instrumentation outline

Table 7.1 Required safety instrumentation

System Component/ Channel	Number Required	Resulting Action	Operating Mode	Set Point Values
Startup count rate	1	Rod prohibit	Startup All modes	≤ 2 counts/s
Reactor period	1 1	Scram Reg rod prohibit	All All	≤ 3 s ≤ 15 s
Reactor power	2	Rod prohibit	All	≥ 110% of range scale
		Scram	All	≥ 125% of range scale
Coolant flow rate	2	Scram	Forced convection above 0.1 MW	1250 gal/min
Coolant inlet temperatures	1	Scram	Force convection above 0.1 MW	108°F
Pool temperature	1	Scram	All	108°F
Pool water level	1	Scram	All modes above 1.25 kW[a]	24.25 ft above core center line
	1	Scram	All modes below 1.25 kW[a]	2.25 ft above core center line
Seismic disturbance	1	Scram	All	Modified Mercalli Scale IV
Primary piping alignment	1	Scram	Forced convection above 0.1 MW	On/off
Bridge movement	1	Scram	All	≥ 1 in.
Coolant gates	1	Scram	Force convection above 0.1 MW--downcomer flow pattern	Coolant riser or downcomer gates open
	1	Scram	Force convection above 0.1 MW--cross pool flow pattern	Coolant riser gate open

[a]Measured value.

Table 7.1 (continued)

System Component/ Channel	Number Required	Resulting Action	Operating Mode	Set Point Values
High voltage failure in control console	1	Scram	All	≤ 500 Vdc
Thermal column door	1	Scram	All	Door open
Truck and/or air lock integrity	3	Scram	All	Door open
Manual scram	1	Scram	All	Operator
Reactor on key switch	1	Scram	All	Not in operating position
Gaseous stack monitor	1	GREA[b]	All	~10 times MPC
Particulate stack monitor	1	GREA	All	~10 times MPC
CAMs	1 of 2	LREA[b]	All	Field determined
	1 of 2	GREA	All	~10 times MPC
GRAs	(c)			
Building exhaust plenum	--	LREA	All	~5 mR/h
Building exhaust plenum	--	GREA	All	~100 mR/h
Bridge	--	LREA/GREA	All	~100 mR/h
Opposite thermal column	--	LREA/GREA	All	~100 mR/h
Rabbit Tube No. 1	--	LREA	All	~100 mR/h
Experimental floor	--	LREA	All	~100 mR/h
Control room	--	LREA/GREA	All	~100 mR/h
FPRMs				
Fission product monitor	--	LREA	All	Field determined
Fission product monitor	--	GREA	All	(d)
Core exit line	--	LREA	All	Field determined
Core exit line	--	GREA	All	~100 mR/h

[b]GREA - General Radiation Emergency Alarm.
LREA - Limited Radiation Emergency Alarm.

[c]Two required by Technical Specifications--one on the experimental level and one over the reactor pool.

[d]Trip set at level that has a potential to result in about 10 times MPC for airborne radioactivity or 100 mR/h of gross radiation.

(1) Log count rate or startup channel. This channel receives data from a movable proportional counter. Its primary purpose is to monitor the reactor power during startup.

(2) Log-N power channel. This channel receives data from a compensated ion chamber (CIC) and monitors the reactor power level in the range of 0.1 W to about 1 MW. This channel also provides a signal to the period amplifier for indicating the reactor period and period scram.

(3) Safety channels. Two CICs provide signals for two independent channels that monitor the reactor power from <0.1 W to >1 MW. These channels give the redundancy to scram the reactor in response to reactor power above the set point. One of the CICs also provides the signal for automatic servo control of reactor power.

All neutron-sensing chambers are located in the pool outside of the core and are independently adjustable over a limited distance to allow calibration of their respective channels to the reactor thermal power.

A drop in the high voltage to the CICs will result in a scram. Also, if the log-N and period channel amplifier mode switch is not in the operating position, a relay in the scram system will prevent reset of the scram circuit. Movement of the mode switch from the operating position when the reactor is operating will result in a scram.

7.2.2 Process Instrumentation

The process instrumentation monitors nonnuclear parameters and provides, as appropriate, rod withdrawal prohibits and/or alarm signals as well as information to assist in the operation of the facility.

Under natural and force-convection cooling, primary coolant inlet and/or pool water temperatures $\geq 108^{\circ}F$ will initiate a scram. Temperature-sensing elements are located in the primary water inlet and outlet lines and the reactor pool. The conductivity of the primary coolant is monitored by a conductivity bridge that samples the water in the holdup tank. Conductivity ≥ 1.5 μmho activates a reactor console alarm. Primary and secondary coolant flows are measured with calibrated oriface meters. A primary coolant flow rate, $\leq 90\%$ of normal, activates an alarm and a flow rate, $\leq 80\%$ of normal, initiates a scram.

Loss of ac power to the console will scram the reactor automatically by removing power from the rod-holding magnets. The reactor console key in the off position causes an essentially identical loss of ac power to the console and causes a reactor scram, if turned off when the reactor is operating.

7.2.3 Inhibits and Annunciation

Inhibit signals will prevent control rod removal (reactor startup). In addition to the inhibits listed in Table 7.1, the control rods cannot be withdrawn if the startup counter detector is in motion or if the safety channel meters read less than 5%.

A control-console-mounted annunciator panel of lights and a buzzer provides the operator with information on conditions of important variables related to reactor

operation. The annunciator is energized continuously through the main power disconnect switch. Following annunciation of an event, the operator may press the acknowledge button to silence the buzzer, but the condition must be corrected, and the operator must reset to restore the annunciator to normal operating condition.

7.2.4 Reactor Safety System

The control and instrumentation systems are interconnected through a trip actuator amplifier. This unit supplies current for the electromagnets that support the control rods. The safety circuit provides a scram by interrupting the dc current in the holding magnets or by turning off the dc power supply to the trip actuator amplifier.

7.3 Radiation Monitoring Instruments

The radiation monitoring system consists of fixed-position gross radiation monitors (GRMs), two continuous air monitors (CAMs), particulate and gaseous stack monitors, and two fission product release monitors (FPRMs). Alarm conditions in specific combinations of the monitors will result in operator activation of a Limited Radiation Emergency Alarm (LREA) or a General Radiation Emergency Alarm (GREA) discussed in more detail in Section 12. The alarm set points for those monitors that cause an LREA or a GREA are listed in Table 7.1.

Single GRMS are mounted in 12 locations throughout the facility, providing coverage. The CAMs detect gaseous airborne radioactivity and are located on the reactor pool level and in the experimental (beam port) area. The stack monitoring system detects gaseous and particulate airborne radioactivity and draws an air sample stream from the facility exhaust stack system. The FPRMs are designed to detect the potential release of fission products and are located in the outlet of the holdup tank and above the reactor pool.

7.4 Conclusions

The control and instrumentation systems at the ULR facility are well designed and maintained in an acceptable manner. Redundancy in the important ranges of reactor power measurements is ensured by overlapping ranges of the log-N and linear power channels.

The licensee's performance specifications for the individual components used throughout the system exceed the minimum acceptable level. This helps to ensure system reliability and decreases the chances of simultaneous multicomponent failures.

The control system is designed so that the reactor is shut down automatically and safely if the electrical power is lost. Emergency power is not required for a safe shutdown, albeit available.

On the basis of its review of the control and instrumentation systems, the staff concludes that these systems are adequate to ensure safe operation of the reactor.

8 ELECTRICAL POWER SYSTEM

The electrical power system at the ULR facility is a standard and well-accepted electrical supply system designed and constructed to specifications similar to those at other research reactor facilities.

8.1 Main Power

The campus power plant supplies 4160-V three-phase power to two transformers in the Pinanski Building. These transformers supply two motor control centers and a distribution center in the reactor building.

8.2 Emergency Power

Because the reactor will scram with a power interruption and the decay heat generated in the core after scram will not cause fuel heating above acceptable levels, emergency power is not needed to achieve or maintain safe shutdown. As indicated in Section 6.3, there is a 70-kW natural-gas-fueled emergency generator in the basement of the Pinanski Building. When normal power is lost, this generator automatically starts and supplies power to those components listed in Table 6.1.

8.3 Conclusion

On the basis of the above factors, the staff concludes that the electrical power system is acceptable for continued operation of the ULR.

9 AUXILIARY SYSTEMS

9.1 Fuel Handling and Storage

Fuel handling at the ULR facility is performed using manual handling tools typical of plate-type research reactors. They are used to grasp, move, and position fuel elements either into the core grid plate or into a storage rack.

New fuel elements are kept in storage racks located in the reactor pool. Fuel storage racks for up to 72 irradiated fuel elements are provided in the pool. Each rack holds nine elements in a planar array so that there is no possibility of inadvertant criticality with this kind of storage. Positions for eight racks are located along the walls of the stall pool, and positions for eight more are along the walls of the bulk pool so that it is possible to locate all of the storage racks in either end of the pool.

9.2 Fire Protection System

Portable firefighting equipment is available at every level, as are manual alarm stations that activate klaxon buzzers and send a signal to the Lowell Fire Department.

9.3 Air Conditioning

The ventilation system is described in Section 6. Heating, cooling, and reheating coils upstream of the reactor building supply blower control air temperature and humidity.

9.4 Compressed Air System

Compressed air to operate the various containment valves is supplied by a two-compressor system located in the fan room outside of the reactor building. The two compressors feed a 6-ft^3 storage tank with 200-psi air. All valves fed by this compressor are of fail-safe design so that loss of air causes them to close, except the bypass valve (valve F in Figure 6.1), which can be operated several times by the reserve air supply in the storage tank. Valve F also can be operated manually.

A separate compressor and tank are located inside the reactor on the intermediate level floor. These supply air to operate the air lock doors as well as service air throughout the reactor, including the gamma cave safety interlock system. A 9.3-ft^3 reserve tank stores air at ~60 psi; this reservoir is enough to open and close a set of air lock doors several times.

9.5 Communication System

A multioutlet intercom system has stations both inside the reactor containment and outside at various locations in the radiation laboratory as follows:

(1) reactor control room
(2) intermediate level floor (hot cell area)

(3) thermal column area
(4) reactor basement (pump room and hot lab)
(5) Reactor Supervisor's office
(6) radiochemistry laboratory
(7) AC-2 fan room
(8) reactor operations room
(9) gamma cave
(10) airlocks

A sound-powered headset system is installed and has jack outlets in the control room, at the reactor bridge, along the reactor pool (two), and in the pump room (two).

9.6 Conclusion

The staff concludes that these auxiliary systems are adequate to support the ULR facility in a safe and reliable manner.

10 EXPERIMENTAL PROGRAM

The ULR facility supports various experimental programs beyond the nuclear engineering undergraduate and graduate educational programs. Research using the neutron and gamma radiation within and near the reactor core addresses basic education in reactor technology, materials applications, health physics, and medical applications, as well as special experiments performed for outside agencies. Most of the experimental work is performed by UL faculty, staff, and students, but visiting experimenters have been accommodated. The experimental facilities designed into the reactor are flexible and extensive. Potential radiation hazards associated with their use have prompted formulation of a review procedure and limits on experiments that are included in the ULR Technical Specifications. Limits also are imposed on reactivity insertion by experimental packages placed near the core.

10.1 Experimental Facilities

The ULR experimental facilities make the radiations produced by the reactor available for experimental work without reducing the safety of operating personnel. A thermal column, two 8-in. and four 6-in. beam ports, and two pneumatic tubes are used to position irradiation samples in proximity to the reactor core. Bulk irradiation is accomplished in a dry irradiation facility and a hot cell that are incorporated in the walls of the pool. In-core radiation baskets also may be located in the core, usually at its periphery.

The safety of the experimental facilities depends on proper design of shield plugs where they penetrate the biological shield, on proper closure of penetrations of the tank to prevent leakage of pool water, and on proper handling or irradiated materials. The above-mentioned experimental facilities are discussed in detail below.

10.1.1 Beam Ports

The two 8-in. and four 6-in. beam ports are air-filled aluminum tubes extending through the biological shield to the core face. A typical beam port arrangement is shown in Figure 10.1. Close proximity to the core face provides leakage neutrons with a broad energy spectrum. Radiation protection is provided by a lead shutter and an concrete-lead-steel shield plug. The beam tubes project through the pool liner and are sealed to the pool liner by welded joints. Double integrity of the tube against pool water leakage is provided by the tube wall and a flanged connection at the outer end. A drain line connects each tube to both the 3000-gal sump tank and the ventilation exhaust system, thereby preventing buildup of water seepage or of activated gases (primarily ^{41}Ar). Evacuated aluminum cylinders are installed in the void spaces of unused beam ports to reduce ^{41}Ar production. The beam ports are not opened during reactor operation and are determined to be closed by visual inspection before reactor startup.

10.1.2 Thermal Column

The thermal column is a 4- by 4-ft assembly containing a graphite moderator to thermalize neutrons from the core. The graphite stringers in the center of the

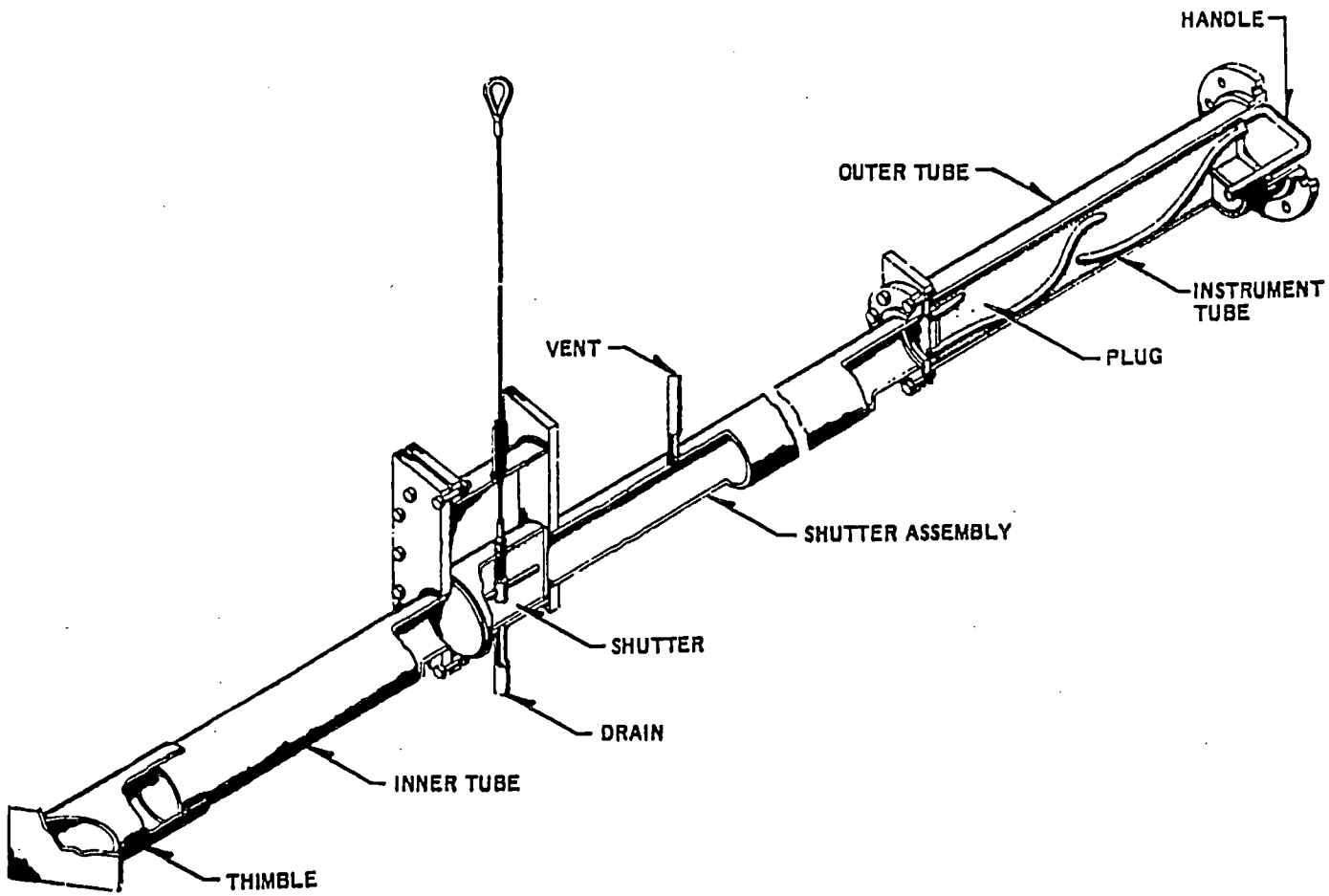

Figure 10.1 Typical beam port

graphite assembly are removable to allow placement of experimental samples in the thermal neutron field. Gamma radiation in the column is reduced by a lead shield. The thermal column is set in the biological shield, but does not penetrate the pool liner. A combination drain and ventilation exhaust line prevents buildup of condensation or radioactive gas (primarily ^{41}Ar) in the thermal column. A heavy steel door provides radiation protection for operating personnel. An interlock prevents reactor operation when the thermal column door is open.

10.1.3 Irradiation Baskets

Aluminum baskets that are interchangeable with fuel and reflector elements allow irradiation of samples at any core position. The design of these baskets permits cooling of the basket and its contents. Handling the baskets is similar to fuel handling and is attended by radiation monitoring personnel during sample withdrawal.

10.1.4 Pneumatic Tube System

The pneumatic tube system consists of two air-filled tubes capable of rapidly positioning small experimental samples adjacent to the reactor core and retrieving them in a safe manner after short, precisely timed exposure periods. Samples are loaded and unloaded at two remote receiving stations located at the experimental level or in the hot laboratory at the basement level of the reactor building. Precaution against accidental exposure from a stuck rabbit or unexpectedly high radiation has been provided by fixed detectors. The pneumatic transfer tubes are exhausted to the ventilation system to prevent buildup of ^{41}Ar.

10.1.5 Gamma Cave

A gamma irradiation facility located in the biological shield allows irradiation of larger packages (~2- by 2-ft). The package is located in a dry case immediately outside the pool liner. Access to the gamma case is gained through a heavy hinged door that is padlocked during gamma cave operation and interlocked to prevent access if unsafe radiation levels exist. This interlock system also is connected to an alarm system.

10.1.6 Hot Cell Facility

The hot cell is located on the intermediate level immediately above the gamma cave. The hot cell is connected to the reactor pool by a 2- by 2-ft transfer port in the pool wall. Watertight doors at each end of the transfer port are interlocked to prevent loss of pool water into the hot cell, which is a dry facility. Water trapped between the transfer doors is drained to the basement sump tank before the door is opened. Access to the cell from the reactor building is gained through a door with a warning light to indicate elevated radiation levels.

10.2 Experiment Reviews

All proposed new experiments, procedures, and facility changes must be reviewed and approved by the UL Reactor Safety Subcommittee of the Radiation Safety Committee. The subcommittee is composed of the Radiation Safety Officer and four

other members who are senior scientific or engineering staff or faculty. The aim of the Radiation Safety Committee in appointing these members is to achieve a high level of proficiency in all areas of reactor operation and safety among subcommittee members. Experiment reviews are based on ANSI/ANS N401-1974, Standard for Review of Experiments for Research Reactors.

10.3 Conclusion

The staff concludes that the design of the ULR experimental facilities, the Technical Specification requirements, the formal evaluation and approval process imposed on proposed experiments and the procedural controls under which they are performed provide an adequate framework for a safe experimental program. Therefore, the staff believes that reasonable provisions have been made to limit the risk of radiation exposure to the staff, student body, and the public.

11 RADIOACTIVE WASTE MANAGEMENT

The airborne radioactive waste generated by reactor operation is principally ^{41}Ar activated from ^{40}Ar dissolved in the pool water and in the air-filled experimental facilities. A limited volume of radioactive solid waste, principally spent ion exchange resins, results from reactor operation. Some additional solid waste is produced by the research programs. Liquid radioactive waste is produced by regeneration of the ion exchange resin bed in the pool cleanup system.

11.1 Waste Generation and Handling Procedures

11.1.1 Solid Waste

Spent ion exchange resins constitute the bulk of solid waste resulting from reactor operation. Activity in the resins is primarily ^{51}Cr and ^{24}Na, both activation products. Sodium-24 is allowed to decay before shipment, leaving activity of less than 1 mCi in a drum of spent resins. Two to four 55-gal drums of spent resins are produced each year. All solid wastes are packaged in properly labelled, DOT-approved metal drums, stored in controlled-access areas, and disposed of routinely to a licensed disposal contractor.

Charcoal or HEPA filters changed at the end of service life occasionally contain microcurie amounts of radioactivity and are disposed of as solid waste in approved drums. Additional solid waste results from experimental and maintenance operations. Waste of this sort (disposable clothing, gloves, laboratory items, paper, activated materials, sample transfer rabbits, and the like) accounts for about four 55-gal drums per year, each averaging less than 1 mCi.

11.1.2 Liquid Waste

The bulk of liquid radioactive waste from ULR operations is from regenerating the cleanup system ion exchange resins. The effluent from this regeneration procedure is directed to a 3000-gal sump tank inside the containment building. This tank also receives liquid waste form laboratory sink drains, beam port drains, the gamma cave floor drain, the hot cell floor drain, and the transfer port drain (between pool and hot cell). The sump tank contents are transferred to storage tanks in the Pinanski Building. After sampling and approval by the Radiation Safety Officer, the tank contents are diluted (as necessary) and discharged to the sanitary sewer. Liquid waste also has been transferred to a commercial waste contractor.

The release of liquid radioactive waste to the environment through the sanitary sewer is limited by 10 CFR 20.303. The annual gross average beta activity over the past 5 years has been 0.71 mCi, composed primarily of ^{24}Na and ^{32}P. Decay time and water dilution are commonly used to reduce activity concentration in the storage tanks below 3×10^{-6} $\mu Ci/cm^3$ gross beta activity. Additional dilution is available from sewer effluent from 3.5×10^6 gal annual water use. UL calculations show that this sewer effluent would permit discharge of up to 300 mCi per year without exceeding 10 CFR 20 guidance.

11.1.3 Airborne Waste

The gas waste handling systems collect exhaust air from appropriate points in the containment building and from the experimental facilities. After filtration by HEPA filters, the exhaust air is discharged from the 100-ft stack. Radioactive material in the air is primarily ^{41}Ar, a small amount of ^{16}N, and a small amount of dust activated in the experimental facilities. Fission products have not been released in prior operation and will not be released under normal operation. Actions taken after detection of fission products in the effluent would include assessment of the extent of fission product release and attempts to identify and isolate any failed fuel elements. The emergency exhaust system may be activated under the conditions described in Section 6.2 or activated manually to exhaust containment building air to the stack through a 2-in. charcoal filter and a HEPA filter.

The primary sources of ^{41}Ar are the experimental facilities surrounding the core. These sources are ventilated continuously to prevent buildup of ^{41}Ar to levels that might cause a local exposure problem. Exhaust of ^{41}Ar to the stack has remained below 10 CFR 20 limits for unrestricted areas (averaged over a year). Concentration levels in the containment building also have remained below limits for restricted areas.

Nitrogen-16 is formed by an n, p reaction on oxygen in the water near the core. Delay in rising to the surface of the pool substantially reduces the ^{16}N amounts that transfer to room air. The potential exposure from airborne ^{16}N is below the limits of 10 CFR 20.

The licensee has not taken credit for meteorological dispersion of stack effluent in its calculation of dose in unrestricted areas. The licensee's calculated whole-body dose of 0.51 mrem to a person located near the reactor building throughout a year of typical operation at 1 MW has been substantiated by the staff's calculations. The basis for these results is described further in Section 12.7.

11.2 Conclusion

Because ^{41}Ar is the only significant radionuclide released by the reactor to the environment during normal operations, the staff has reviewed the history, current practices, and future expectations of operations with regard to this radionuclide. The staff concludes that the doses in unrestricted areas as a result of actual releases of ^{41}Ar have never exceeded or even approached the limits specified in 10 CFR 20 when averaged over a year. Furthermore, the staff's calculations of the dose beyond the limits of the reactor facility give reasonable assurance that the potential doses to the public as a result of ^{41}Ar release would not be significant.

Therefore, the staff concludes that the waste management activities at ULR facility have been conducted and are expected to continue to be conducted in a manner consistent with 10 CFR 20 and with ALARA principles.

12 RADIATION PROTECTION PROGRAM

The University of Lowell has a structured radiation safety program with a health physics staff properly equipped to measure, control, and document radiation exposures at the ULR facility.

12.1 ALARA Commitment

The UL Health Physics Group is responsible for a radiation safety program that is consistent with applicable Federal and state regulations and the UL policy that operations are conducted in a manner to keep radiation exposures as low as reasonable achievable (ALARA). Although a written ALARA plan has not been prepared, all proposed experiments and procedures are reviewed for ways to minimize potential exposures of personnel. All unanticipated or unusual reactor-related exposures will be reviewed to develop methods to prevent recurrences.

12.2 Health Physics Program

12.2.1 Health Physics Staffing

The Health Physics Group consists of two health physicists, one of whom is the Radiation Safety Officer, and one health physics technician. Services provided by the Health Physics Group include personnel monitoring, radiation monitoring, instrument calibration, waste pickup and disposal, and radiation safety training. The ULR operations staff is trained in health protection and performs most of the routine monitoring with assistance from the Health Physics Group on an as-needed basis. In addition, the Health Physics Group performs routine radiation and contamination surveys on a regular basis.

The Radiation Safety Officer is a permanent member of the Reactor Safety Subcommittee and participates in the review of the health physics aspects of proposed experiments and operations and conducts periodic audits of radiation protection practices and records.

12.2.2 Procedures

Written procedures address the support provided by the Health Physics Group in day-to-day reactor operation. These procedures identify the interactions among health physics, operational, and experimental personnel. Administrative limits, action points, responses, and corrective actions are included. These procedures receive proper distribution among responsible personnel.

12.2.3 Instrumentation

The Health Physics Group maintains portable instruments for detecting and measuring the types of radiation that could be encountered at the ULR. Gamma instruments cover the range from natural background to above 1000 R/h, and neutron instruments cover the range from 0.1 mrem/h to 2 rem/h. All portable instruments in use are calibrated at 6-month intervals.

12.2.4 Training

All reactor-related personnel are given an indoctrination in radiation safety before they assume their work responsibilities. Additional radiation safety training is provided to personnel working directly with radiation or radioactive materials. Retraining and examinations on health physics practices and procedures are administered at least every 2 years.

12.3 Radiation Sources

Sources of radiation directly related to ULR operations include radiation from the reactor core, activated impurities in ion exchange columns and filters in the cleanup system, ^{16}Na and ^{24}Na in the pool water, and ^{41}Ar in the experimental facilities. Shielding by concrete and pool water reduces the direct radiation to acceptable levels. Locally high radiation levels, such as in the holdup tank in the pump room, are controlled by local shielding, controlled access (distance), and limited time in the radiation area. Continuous ventilation removes activated gases from the air-filled voids in the experimental facilities.

Other sources of radiation occasionally present include radioactive isotopes produced for research, activated components of experiments, and activated samples or specimens. These sources are handled, stored, and disposed of according to approved operating procedures.

12.4 Routine Monitoring

12.4.1 Fixed-Position Monitors

Fixed-position monitors are located to provide continuous monitoring and alarm functions in areas most likely to receive significant direct radiation or airborne radioactivity levels. There are 14 fixed-position gamma monitors located at ULR for this purpose. All monitors have adjustable alarm set points and may be read out at the control room and locally. Eight of these also indicate in the Reactor Supervisor's office outside the reactor containment.

Fixed-filter continuous air monitors are located on the first (experimental level) and third (near exhaust plenum) levels of the reactor building. Indication and alarm are provided locally, in the control room, and in the Reactor Supervisor's office. These instruments are calibrated at 6-month intervals. The licensee's calculations show the sensitivity of these instruments to be adequate for detection of MPC levels of typical fission product activity.

12.4.2 Experimental Support

The Health Physics Group participates in experiment planning by reviewing proposed procedures and assessing radiation protection needs. Methods to minimize personnel exposure and reduce radioactive waste are considered. Procedures specify the radiation safety support required by the experiment.

12.5 Occupational Radiation Exposures

12.5.1 Personnel Monitoring Program

The UL personnel monitoring program consists of a monthly issue of beta-gamma and neutron film badges to all personnel who might be exposed to radiation.

Pocket dosimeters are used commonly in radiation areas. Thermoluminescent dosimeters are available for special personnel exposure studies.

Film badges are processed by an accredited, outside film badge service. Exposure data supplied by this service are verified by comparison with UL-checked dosimeters.

12.5.2 Personnel Exposures

The ULR personnel annual exposure history for the last 5 years is provided in Table 12.1. These exposures indicate that the radiation protection program has been effective in limiting exposures at ULR.

Table 12.1 Number of individuals in exposure interval

	Number of individuals in each range				
Whole-body exposure range (rem)	1980	1981	1982	1983	1984
No measurable exposure	6	6	5	6	8
Measurable exposure less than 0.1	8	6	5	6	4
0.1 to 0.25	0	2	3	1	1
More than 0.25	0	0	0	0	0
Number of individuals monitored	14	14	13	13	13

12.6 Effluent Monitoring

Airborne effluents from the reactor facility consist principally of low concentrations of ^{41}Ar because other radionuclides present in ventilation air have either decayed to low levels or been trapped on the HEPA filter. The stack effluent monitor has a moving filter tape monitored by beta scintillation detectors for radioactive particle monitoring and a shielded GM tube for detecting radioactive gases. The ^{41}Ar emission is detectable at $\sim 6 \times 10^{-7}$ $\mu Ci/cm^3$; the maximum long-term emission (annual average) is $\sim 1 \times 10^{-5}$ $\mu Ci/cm^3$ in the stack. This indicates the stack effluent monitor has adequate capability to monitor effluent activity above background.

Alarm and indication features provide information to the control room and the Reactor Supervisor's office. The stack effluent monitor (either of two channels) provides an input signal to the emergency alarm system.

Liquid effluents from the ULR are released only on a batch basis after sampling, decay, and dilution as needed to meet 10 CFR 20 limits on effluents to unrestricted areas. Procedures related to collection and disposal of radioactive liquids are discussed in Section 11.2.

12.7 Potential Dose Assessments

Natural background radiation levels in the Lowell, Massachusetts, area result in an exposure of about 125 mrem/yr to each individual residing there. At least an additional 6% (approximately 8 mrems/yr) will be received by those living in a brick or masonry structure. Any medical diagnosis X-ray examination will add to the natural background radiations, increasing the total cumulative annual exposure of those individuals.

Conservative calculations by the licensee (i.e., without meteorological dilution of stack effluent), based on the amount of ^{41}Ar released from the reactor facility stack during normal operations, predict a maximum annual exposure of 0.51 mrem in nearby unrestricted areas. This dose was based on an average release rate of 0.34 μCi/s and a concentration calculated according to the expanding balloon model.

12.8 Conclusions

For the above-mentioned reasons, the staff considers that radiation protection currently receives appropriate support from the university administration. The staff concludes that (1) the program is staffed and equipped properly, (2) the Health Physics Group has adequate authority and lines of communication, (3) the procedures are integrated correctly into the research plans, and (4) operations and procedures achieve ALARA principles.

13 CONDUCT OF OPERATIONS

13.1 Overall Organization

The University of Lowell reactor facility organization, including the interrelationships between operating and supporting units is indicated in Figure 13.1.

13.2 Staff Responsibilities

The Reactor Supervisor is responsible for assuring that all operations of the ULR are conducted in a safe manner and within the limits prescribed by the facility license, the Technical Specifications, and the NRC regulations. In all matters pertaining to the operation of the plant and Technical Specifications, the Reactor Supervisor reports to and is directly responsible to the Director of the Radiation Laboratory.

A Radiation Safety Officer, who is organizationally independent of the ULR operations group, is responsible for radiological safety at the facility.

A licensed operator or licensed senior operator pursuant to 10 CFR 55 must be present at the controls whenever the reactor is in operation. The senior operator must be present, or readily available, on call at any time the reactor is in operation. The minimum operating crew is composed of two individuals, at least one of whom is licensed.

13.3 Operations Review

A Radiation Safety Committee (RSC) reviews reactor operations and advises the Director of the Radiation Laboratory in matters relating to the health and safety of the public and the safety of the facility operations. The RSC has two subcommittees, one for reactor safety and the other for accelerator safety. The Reactor Safety Sub-committee has the same authority as the full committee and is comprised of members of the full committee.

13.4 Reviews and Audits

The Reactor Safety Sub-committee reviews and approves proposed experiments and tests that are significantly different from tests and experiments previously performed at the ULR. In addition, the Committee reviews reportable occurrences, reviews and approves proposed amendments to the facility license, reviews proposed changes to the facility made pursuant to 10 CFR 50.59(c), and reviews audit reports prepared by a consultant for reactor operations.

13.5 Training

The qualifications for key supervisory personnel regarding educational and operating experience, stipulated in Section 10 of the UL Safety Analysis Report, satisfy the requirements of 10 CFR 55.

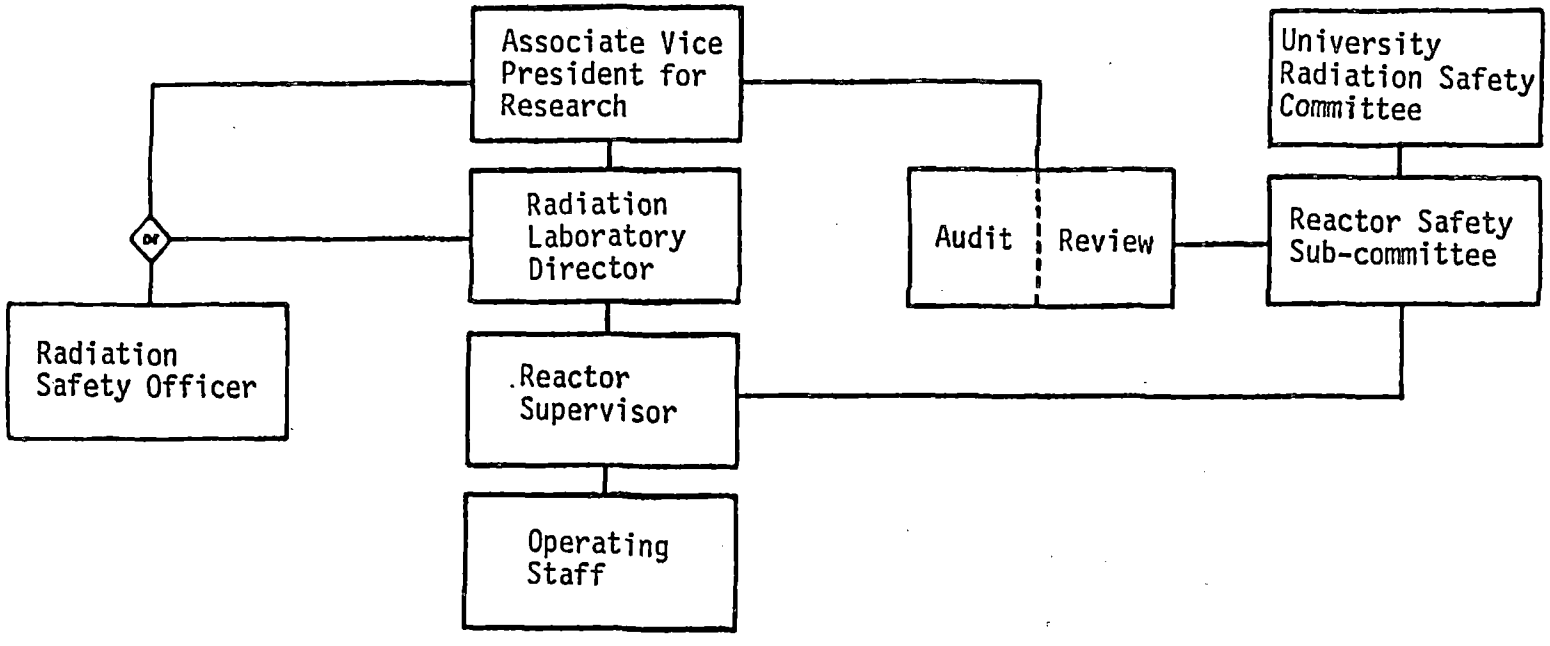

Figure 13.1 ULR organizational structure

13.6 Emergency Planning

10 CFR 50.54 and Appendix E to 10 CFR 50 require that nonpower reactor licensees develop and submit emergency plans. By letter dated October 29, 1982, UL submitted an Emergency Response Plan for the reactor facility, in accordance with NRC and the ANSI/ANS 15.16 guidelines.

On the basis of its review and evaluation of the October 1982 submittal and its supplements, the staff found that the emergency plan for the UL facility demonstrates that the licensee has the capabilities to assess and respond to emergency events, provides the assurance that the necessary emergency equipment is available, and describes a plan of action to protect the health and safety of workers and the public. For the above reasons, the staff concluded that the UL facility's emergency plan meets the requirements of the regulations and, therefore, is acceptable.

13.7 Physical Security Plan

UL has established and maintains a program designed to protect the reactor and its fuel and to ensure its security. The NRC staff reviewed the plan and visited the site. The staff concluded that the plan, as amended, meets the requirements of 10 CFR 50.34(c) and issued license amendment No. 28, dated October 17, 1983. Both the Physical Security Plan and the staff's evaluation are withheld from public disclosure under 10 CFR 2.790(d)(1).

13.8 Conclusion

On the basis of the above discussions, the staff concludes that the licensee has sufficient training, experience, management structure, and procedures to provide reasonable assurance that the reactor will be managed safely and will cause no significant risk to the health and safety of the public.

14 ACCIDENT ANALYSIS

In establishing the limiting safety system settings and the limiting conditions for operation for the ULR, the licensee analyzed potential transients to ensure that these events would not result in safety limits being exceeded. Hypothetical accidents and their effects on the core and the health and safety of the public also were analyzed.

Among the accidents postulated, the one with the greatest potential effect on the unrestricted environment is the failure of a fueled experiment and the subsequent release of its fission product inventory. None of the reactor transients or other accidents analyzed posed a significant risk of fuel cladding failure and would not result in a release of radioactivity.

The failure of a fueled experiment is designated as the maximum hypothetical accident (MHA) for the ULR. An MHA is defined as a postulated accident for which the risk to public health and safety is greater than from any other event. The staff assumed that the accident occurs, but did not try to describe or evaluate the mechanisms that could produce the accident or the probability of its occurrence. Only the consequences were evaluated.

In addition to the MHA, the following three events were evaluated:

(1) rapid insertion of reactivity
(2) loss of coolant
(3) fuel handling accident

14.1 Failure of a Fueled Experiment

As mentioned above, the failure of a fueled experiment is defined as the MHA for this reactor. The staff evaluated the failure of a fueled experiment based on the semi-infinite cloud model outlined in NRC Regulatory Guides 1.25 and 1.109. It was assumed conservatively that 100% of the noble gases and 50% of the halogens would be released from total failure of the experiment (AEC Report TID 14844). An infinite irradiation time was assumed along with a maximum experiment fission power of 100 W.

Additionally, it was assumed that the fission products are released into the reactor building instantaneously and dispersed uniformly within the building. It was further assumed that a person within the reactor building would be exposed to the radioactivity for 10 min before being evacuated from the reactor building. The minimum free air volume of the facility is ~3.00×10^5 ft^3. For evaluating inhalation volumes, a breathing rate of 3.5×10^{-2} ft^3/s was used. The computed doses in the reactor building are given in Table 14.1.

Table 14.1 Radiation doses within the ULR building[a]

Radiation Dose	I	Kr	Xe	Total
Beta dose[b] mrem	5.40	1.60	1.40	8.40
Gamma dose [b] mrem	18.90	0.94	1.00	20.84
Gamma dose[c] mrem	3.20	0.23	0.24	3.67
Thyroid dose commitment[c] rem	2.50	Neg	Neg	2.50

[a]Experiment fission power = 100W, experiment irradiation time = infinite, and evacuation time = 600 s.

[b]Semi-infinite cloud model.

[c]Finite-cloud model.

For a person just outside the building, the doses were computed assuming that (1) all the radionuclides released to the building in the accident were released over the same time period that the individuals at risk were being exposed, (2) the dispersion factor (χ/Q) was 0.01 s/m^3, and (3) there was no radioactive decay during the release. The computed doses outside the reactor building are given in Table 14.2. Potential exposure to individuals in the unrestricted area were computed to be less than the guidelines of 10 CFR 20. The analysis is conservative for the following reasons:

(1) No credit was taken for dissolution, chemical combination, washout, or plateout of radionuclides in the pool or reactor building.

(2) No decrease in source strength resulting from radioactive decay was assumed.

(3) Unfavorable atmospheric dispersion conditions were assumed (minimum dispersion factor).

(4) In the case of onsite exposure, it was assumed that 10 min would be required to exit the building while for offsite exposure, it was assumed that the individual at risk would be exposed for 2 hours.

(5) The semi-infinite cloud model results in doses that may be high by at least an order of magnitude.

(6) No detention time for the fission product was assumed for the containment building, which is maintained under slight negative pressure and has a leak rate of only 10% of the building volume at a ΔP of 2 psig.

Based on the above analysis, the staff concludes that fueled experiments can be used at the ULR facility in accordance with the limitations stated in the Technical Specifications without undue risk to public health and safety.

Table 14.2 Radiation doses for environment outside ULR building[a]

Radiation Dose	I	Kr	Xe	Total
Beta dose[b] mrem	0.25	0.07	0.06	0.38
Gamma dose[b] mrem	0.89	0.05	0.06	1.00
Thyroid dose commitment rem	0.17	Neg	Neg	0.17

[a]Assumes exposure time = 2h, release time = 240 h (10%/day, $\chi/Q = 10^{-2}$ s/m^3, and no decay once in the environment.

[b]Semi-infinite cloud model.

14.2 Rapid Insertion of Reactivity (Nuclear Excursion)

The licensee has analyzed potential transients that might result from a rapid insertion of reactivity. The staff also evaluated potential transients resulting from a 2.5% Δk/k ramp insertion of reactivity during startup conditions.

14.2.1 Step Insertion of Reactivity

The Technical Specifications limit the maximum reactivity worth of a single movable experiment to 0.1% Δk/k and limit the maximum reactivity worth of all movable experiments to 0.5% Δk/k. A cold water insertion will not result in a reactivity insertion greater than 0.3% Δk/k. A fuel handling accident will not result in a reactivity insertion greater than 0.5% Δk/k. Thus, the analysis of this event assumed a step insertion of reactivity of 0.5% Δk/k.

The ULR fuel geometry and composition are very similar to the SPERT I-D 12/25 core (Table 14.3). Excursion experiments at the BORAX and SPERT facilities (Miller, 1964; Zeisaler, 1963; Forbes, 1956; Edlund, 1957; Nyer, 1956) demonstrated that no mechanical damage or high fuel temperatures occurred for a step insertion of 0.5% Δk/k. Based on these experiments and the similarity to the SPERT I-D 12/25 core, a period of >1300 ms, a ratio of peak power to initial power of about 3.5, an energy release of <3 MW-s, and a maximum fuel temperature of about 80°C would occur for a step insertion of reactivity of 0.5% Δk/k (Miller, 1964; Zeisler, 1963). Thus the staff concludes that a step insertion of reactivity of 0.5% Δk/k will not result in fuel or core damage.

14.2.2 Ramp Insertion of Reactivity

For a single safety rod, the maximum reactivity insertion rate is about 0.020% Δk/k/s, which is less than the Technical Specification limit of 0.025% Δk/k/s. The maximum reactivity insertion rate for the regulating rod is 0.076 Δk/k/s. If the interlocks failed on the control rods, all four rods could be withdrawn simultaneously, yielding a maximum ramp insertion <0.08% Δk/k/s. The boiling ramp tests at the SPERT facility for the SPERT I core demonstrated that ramp insertions of reactivity up to 2.5% Δk/k at rates up to 0.35% Δk/k/s

Table 14.3 ULR vs SPERT-I fuel data

Parameters	ULR Plate	SPERT-1 Plate
Geometry:		
Length	24.0 in.	24.0 in.
Width (including cladding)	3.0 in.	3.0 in.
Thickness	0.06 in.	0.06 in.
Water gap	0.10 in.	0.18 in.
Fuel:		
Material	U-Al	U-Al
Enrichment (%)	93	93
Weight fraction of U	0.24	0.24
Cladding:		
Material	Al	Al
Thickness	0.024 in.	0.020 in.

resulted in no damage to the fuel. Assuming an insertion of 2.5% Δk/k at a rate of 0.08% Δk/k/s from critical at 5W and using the results of SPERT I Test No. 2773, a period of about 91 ms, a peak power of about 19 MW, and a maximum fuel temperature of about 248°F would occur initially. About 8.2 s into the accident, the reactor would scram on 125% power, thus preventing the full insertion of 2.5% Δk/k. If the scram system failed, the operator would have about 45 s to initiate a manual scram before unstable oscillations occurred (Forbes, 1956). Thus, the staff concludes that no fuel damage will result from a maximum ramp insertion of 2.5% Δk/k at a rate of 0.08% Δk/k/s.

14.3 Loss of Coolant

A loss of coolant is considered extremely unlikely because of the design and construction of the reactor pool. The lowest level penetrations of the reactor pool are the beam tubes. If an 8-in. beam port failed while the reactor was at full power, it would take 27 min for the water to drain out of the pool. A reactor scram should occur immediately. The decay power initially would be 0.38 kWt/plate and would be about 0.12 kWt/plate at 27 min. At this time, no more water would drain from the core, thus leaving the bottom third of the core still immersed. Heat transfer would be by natural convection of a steam-water mixture; thus the surface temperature of the fuel would be maintained slightly above the saturated temperature of the steam-water mixture. The decay power would continue to decrease. Even if the bottom third of the core becomes uncovered, the core can be cooled sufficiently by natural convection of air (Wett, 1960; Webster, 1967). Thus, the staff concludes that no fuel damage will result from a loss of coolant.

14.4 Fuel Handling Accident

The staff has analyzed an accident in which a fuel element is dropped during fuel manipulation so that it occupies a position on the periphery of the core.

During core unloading, which always proceeds from the outside to the inside, each fuel element is moved individually, using a manual handling tool, and put into the storage space within the reactor pool. If a fuel element was dropped inadvertently during transfer, sufficient mechanical distortion of the end fittings could possibly occur so as to prohibit continued use as a fuel element. However, sufficient damage to strip cladding from one or more fuel plates with subsequent release of fission products is not credible. The worth of an outside fuel element is less than 0.5% $\Delta k/k$ (Hackney, 1963). Therefore, if a fuel element was dropped next to a barely subcritical core, the resulting reactivity insertion would be less than 0.5% $\Delta k/k$, with consequences less than those analyzed in Section 14.2.1.

Although a polar crane is located in the reactor building, it is not used during refueling operations, which are done manually with hand tools. The use of the polar crane is restricted while the reactor is operating. Thus, the potential for dropping a cask or other heavy object on the core while the reactor is operating does not exist. However, if one were dropped, the bridge and core support structure would shield the core and deflect the object away from the core, thus preventing any serious damage to the core and the fuel.

The staff concludes, on the basis of the above considerations, that fuel handling accidents will not lead to release of fission products to the reactor building or the environment.

14.5 Conclusion

The staff has reviewed the potential transients for the ULR. On the basis of this review, the most significant event that is postulated to result in a release of fission products to the environment is the total failure of a fueled experiment. The analysis has demonstrated that even if this unlikely event should occur, the resultant doses would be below the guideline values of 10 CFR 20. Therefore, the staff concludes that the design of the facility together with the Technical Specifications provides reasonable assurance that the ULR can continue to be operated without significant risk to the health and safety of the public.

15 TECHNICAL SPECIFICATIONS

The licensee's Technical Specifications for the ULR have been evaluated in this licensing action. These Technical Specifications define certain features, characteristics, and conditions governing the operation of this facility and are explicitly included in the renewal license as Appendix A. Formats and contents of these Technical Specifications have been reviewed using the ANSI/ANS 15.1-1982 standard, "The Development of Technical Specifications for Research Reactors," as a guide.

On the basis of its review, the staff finds the Technical Specifications to be acceptable and concludes that normal plant operation within the limits of the Technical Specifications will not result in offsite radiation exposures in excess of 10 CFR 20 limits. Furthermore, the limiting conditions for operation and surveillance requirements will limit the likelihood of malfunctions and mitigate the consequences to the public in regard to off-normal or accident events.

16 FINANCIAL QUALIFICATIONS

The ULR facility is operated by the University of Lowell, an agency of the State of Massachusetts, in support of its assigned educational and research mission. Therefore, the staff concludes that funds will be made available, as necessary, to support continued operations and eventually to shut down the facility and maintain it in a condition that would constitute no risk to the public. The licensee's financial status was reviewed and found to be acceptable in accordance with the requirements of 10 CFR 50.33(f).

17 OTHER LICENSE CONSIDERATIONS

17.1 Prior Reactor Utilization

Previous sections of this SER concluded that normal operation of the reactor causes insignificant risk of radiation exposure to the public and that only an off-normal or accident event could cause any measurable exposure. However, even the maximum hypothetical accident (MHA) analyzed in Section 14 resulted in radiation exposures that were fractions of applicable guidelines of 10 CFR 20.

The staff has reviewed the impact of prior operation of the facility on the risk of radiation exposure to the public. Although the staff has concluded that the reactor was initially designed and constructed with both inherent safety and additional engineered safety features, the staff also has considered whether continued operation would cause significant degradation in these features. Furthermore, because loss of integrity of fuel cladding is possible, the staff considered mechanisms that could increase the likelihood of failure. Possible mechanisms are (1) radiation degradation of cladding strength, (2) corrosion or erosion of the cladding leading to thinning or other weakening, (3) mechanical damage as a result of handling or experimental use, and (4) degradation of safety components or systems.

The staff's conclusions regarding these parameters, in the order in which they were identified above, are as follows:

(1) The aluminum clad uranium-aluminide fuel in the core has been in use since 1974 and has been subjected to less than 2% burnup of ^{235}U. This fuel at more extensively used reactors has been in service for many times more burnup, with no observable degradation of cladding as a result of radiation.

(2) The staff concludes that erosion effects as a result of high flow velocity will be negligible. High primary water purity is maintained by continuous passage through the filter and demineralizer system. With conductivity below about 5 $\mu mho\text{-}cm^{-1}$, as limited by the Technical Specifications, corrosion of the stainless-steel cladding is expected to be negligible.

(3) The fuel is handled as infrequently as possible, consistent with periodic surveillance. Any indications of possible damage or degradation are investigated immediately. The only experiments that are placed near the core are isolated from the fuel cladding by a water gap and at least one metal barrier, such as the pneumatic tubes or the central thimble. Therefore, the staff concludes that loss of integrity of cladding through damage does not constitute a significant risk to the public.

(4) ULR receives regular preventive and corrective maintenance and replaces components, as necessary. Nevertheless, there have been some malfunctions of equipment; however, the staff review indicates that most of these malfunctions have been random one-of-a-kind incidents. There is ro indication of significant degradation of the instrumentation. The staff concludes that there is strong evidence that any future degradation will lead to

prompt remedial action by the ULR staff and that there is reasonable assurance that there will be no significant increase in the likelihood of occurrence of a reactor accident as a result of component malfunction.

17.2 Conclusion

On the basis of the above considerations, the staff concludes that there are no other credible events that could produce effects greater than those already analyzed in Section 14.

18 CONCLUSIONS

On the basis of its evaluation of the application as set forth above, the staff has determined that

(1) The application for renewal of reactor Operating License R-125 for its reactor filed by the University of Lowell, dated February 14, 1985, as supplemented, complies with the requirements of the Atomic Energy Act of 1954, as amended (the Act), the Commission's regulations set forth in 10 CFR Chapter I.

(2) The facility will operate in conformity with the application as amended, the provisions of the Act, and the rules and regulations of the Commission.

(3) There is reasonable assurance (a) that the activities authorized by the operating license can be conducted without endangering the health and safety of the public and (b) that such activities will be conducted in compliance with the regulations of the Commission set forth in 10 CFR Chapter I.

(4) The licensee is technically and financially qualified to engage in the activities authorized by the license in accordance with the regulations of the Commission set forth in 10 CFR Chapter I.

(5) The renewal of this license will not be inimical to the common defense and security nor to the health and safety of the public.

19 REFERENCES

Atomic Energy Commission, Report TID 14844, "Calculation of Distance Factors for Power and Test Reactor Sites," J. J. DiNumro et al., March 23, 1962.

American National Standards Institute/American Nuclear Society (ANSI/ANS), 15 Series.

---, 15.1, "Standard for the Development of Technical Specifications for Research Reactors," May 1982.

Code of Federal Regulations, Title 10, "Energy," U.S. Government Printing Office, Washington, D.C.

Edlund, M. C., and L. C. Noderer, "Analysis of Borax Experiments," Oak Ridge National Laboratory report CF-57-7-92, July 19, 1957.

Forbes, S. G., et al., "Instability in the SPERT I Reactor Preliminary Report," Idaho Operations Office report IDO-16309, October 10, 1956.

Hackney, M. R., "Physics Analysis of the Lowell Swimming Pool Reactor," General Electric report GECR-4365, July 12, 1963.

Hadley, J. B., and J. F. Devine, Seismotectonic Map of the Eastern United States, U.S. Geological Survey, 1974.

Miller, R. W., et al., "Report on the SPERT I Destructive Test Program on an Aluminum, Plate-Type, Water-Moderated Reactor," Idaho Operations Office report IDO-16883, June 1964.

Nyer, W. E., S. G. Forbes, F. L. Bentzen, G. O. Bright, F. Schroeder, and T. R. Wilson, "Experimental Investigations of Reactor Transients," Idaho Operations Office report IDO-16286, April 20, 1956.

Trifunac, M. D., and A. G. Brady, "On the Correlation of Seismic Intensity Scales With the Peaks of Recorded Strong Ground Motion," Seismological Society of America bulletin, Vol. 65, No. 1, 139-162, February 1975.

U.S. Geological Survey, Open-File Report 82-1033, "Probabilistic Estimates of Maximum Acceleration and Velocity in Rock in the Contiguous United States," S. T. Algermissen et al., U.S. Department of Interior, 1982.

Webster, C. C., "Water-Loss Tests in Water-Cooled and Moderated Research Reactors," Nuclear Safety 8(6), November-December 1967.

Wett, J. F., Jr., "Surface Temperature of Irradiated ORR Fuel Elements Cooled in Stagnant Air," Oak Ridge National Laboratory report ORNL-2892, March 23, 1960.

Zeisaler, M. R., "Non-Destructive and Destructive Transient Tests of the SPERT I-D, Fully Enriched, Aluminum-Plate-Type Core: Data Summary Report," Idaho Operations Office report IDO-16886, November 27, 1983.

NRC FORM 335 (2-84) NRCM 1102, 3201, 3202

U.S. NUCLEAR REGULATORY COMMISSION

BIBLIOGRAPHIC DATA SHEET

SEE INSTRUCTIONS ON THE REVERSE

1 REPORT NUMBER (Assigned by TIDC, add Vol No., if any)

NUREG-1139

2 TITLE AND SUBTITLE

Safety Evaluation Report related to the renewal of the operating license for the training and research reactor at the University of Lowell.

3 LEAVE BLANK

4 DATE REPORT COMPLETED

MONTH	YEAR
November	1985

5 AUTHOR(S)

6 DATE REPORT ISSUED

MONTH	YEAR
November	1985

7. PERFORMING ORGANIZATION NAME AND MAILING ADDRESS (Include Zip Code)

Division of Licensing
Office of Nuclear Reactor Regulation
U.S. Nuclear Regulatory Commission
Washington, D.C. 20555

8 PROJECT/TASK/WORK UNIT NUMBER

9 FIN OR GRANT NUMBER

10 SPONSORING ORGANIZATION NAME AND MAILING ADDRESS (Include Zip Code)

11a TYPE OF REPORT

Safety Evaluation Report

b PERIOD COVERED (Inclusive dates)

12 SUPPLEMENTARY NOTES

13 ABSTRACT (200 words or less)

This Safety Evaluation Report for the application filed by the University of Lowell for renewal of operating license number R-125 to confine to operate the open-pool type training and research reactor has been prepared by the Office of Nuclear Reactor Regulation of the U.S. Nuclear Regulatory Commission. The facility is owned and operated by the University of Lowell and is located on the university campus in Lowell, Massachussetts. The staff concludes that the open-pool type reactor facility can continue to be operated by the University of Lowell without endangering the health and safety of the public.

14 DOCUMENT ANALYSIS – a KEYWORDS/DESCRIPTORS

Non Power Reactor
University of Lowell
Open-Pool Type Reactor
License Renewal

b IDENTIFIERS/OPEN ENDED TERMS

15 AVAILABILITY STATEMENT

Unlimited

16 SECURITY CLASSIFICATION

(This page)

Unclassified

(This report)

Unclassified

17 NUMBER OF PAGES

18 PRICE

UNITED STATES
NUCLEAR REGULATORY COMMISSION
WASHINGTON, D.C. 20555

OFFICIAL BUSINESS
PENALTY FOR PRIVATE USE, $300

FIRST CLASS MAIL
POSTAGE & FEES PAID
USNRC
WASH. D.C.
PERMIT No G-67

RESEARCH REACTOR AT THE UNIVERSITY OF LOWELL