AEC DISTRIBUTION FOR PART 50 DOCKET MATERIAL
(TEMPORARY FORM)

CONTROL NO: 2964

FILE

FROM:	DATE OF DOC:	DATE REC'D	LTR	MEMO	RPT	OTHER
Duke Power Company Charlotte, N. C. 28201 A. C. Thies	5-4-73	5-7-73	X			

TO:	ORIG	CC	OTHER	
Mr. Giambusso	1 signed			SENT AEC PDR X SENT LOCAL PDR X

CLASS:	INPUT	NO CYS REC'D	DOCKET NO:
(U) PROP INFO		1	50-269

DESCRIPTION:
Ltr furnishing info re an incident on 3-6-73 & trans the following:

ENCLOSURES:
REPORT: March 6, 1973, 1A1 Reactor Coolant Pump Oil Fire Incident Report, dtd 5-4-73 for the Oconee Nuclear Station Unit 1.

Do Not Remove
ACKNOWLEDGED

PLANT NAMES: Oconee Nuclear Station Unit 1

FOR ACTION/INFORMATION 5-8-73 AB

BUTLER(L)	✓SCHWENCER(L)	ZIEMANN(L)	YOUNGBLOOD(E)
W/ Copies	W/ 7 Copies	W/ Copies	W/ Copies
CLARK(L)	STOLZ(L)	ROUSE(FM)	REGAN(E)
W/ Copies	W/ Copies	W/ Copies	W/ Copies
GOLLER(L)	VASSALLO(L)	DICKER(E)	
W/ Copies	W/ Copies	W/ Copies	W/ Copies
KNIEL(L)	SCHEMEL(L)	KNIGHTON(E)	
W/ Copies	W/ Copies	W/ Copies	W/ Copies

INTERNAL DISTRIBUTION

✓REG FILE	TECH REVIEW	DENTON	F & M	WADE	E
✓AEC PDR	✓HENDRIE	GRIMES	SMILEY	BROWN	E
✓OGC, ROOM P-506A	SCHROEDER	GAMMILL	NUSSBAUMER	G. WILLIAMS	E
✓MUNTZING/STAFF	✓MACCARY	KASTNER		SHEPPARD	E
✓CASE	✓KNIGHT	BALLARD	LIC ASST.		
GIAMBUSSO	✓PAWLICKI	SPANGLER	SERVICE L	A/T IND	
BOYD	✓SHAO		WILSON L	BRAITMAN	
V. MOORE-L(BWR)	✓STELLO	ENVIRO	GOULBOURNE L	SALTZMAN	
✓DEYOUNG-L(PWR)	✓HOUSTON	MULLER	SMITH L		
SKOVHOLT-L	✓NOVAK	DICKER	GEARIN L	PLANS	
P. COLLINS	✓ROSS	KNIGHTON	DIGGS L	MCDONALD	
	✓IPPOLITO	YOUNGBLOOD	TEETS L	DUBE	
REG OPR	✓TEDESCO	REGAN	LEE L		
✓FILE & REGION(2)	✓LONG	PROJ LEADER	MAIGRET L	INFO	
✓MORRIS	✓LAINAS		SHAFER F & M	C. MILES	
✓STEELE	✓BENAROYA	HARLESS			
	✓VOLLMER				

EXTERNAL DISTRIBUTION

✓1-LOCAL PDR Walhalla, S. C.
✓1-DTIE(ABERNATHY)
✓1-NSIC(BUCHANAN)
1-ASLB-YORE/SAYRE
WOODWARD/H ST.
✓16-CYS ACRS ~~HOLDING~~ SENT TO LIC ASST. GOULBOURNE ON 5-8-73

(1)(2)(9)-NATIONAL LAB'S
1-R. CARROLL-C, GT-B227
1- R. CATLIN,E-256-GT
1- CONSULTANT'S NEWMARK/BLUME/AGABIAN
1- GERLAD ULRIKSON....ORNL

1-PDR-SAN/LA/NY
1- GERALD LELLOUCHE
BROOKHAVEN NAT. LAB
1-AGMED(WALTER KOESTER, RM C-427, GT)
1- RD...MULLER...F-309GT

Rg

Regulatory File Cy.

DUKE POWER COMPANY
POWER BUILDING
422 SOUTH CHURCH STREET, CHARLOTTE, N. C. 28201

A. C. THIES
SENIOR VICE PRESIDENT
PRODUCTION AND TRANSMISSION

P. O. Box 2178

May 4, 1973

Mr. Angelo Giambusso
Deputy Director for Reactor Projects
Directorate of Licensing
U. S. Atomic Energy Commission
Washington, D. C. 20545

Re: Oconee Nuclear Station
Unit 1
Docket No. 50-269

Dear Mr. Giambusso:

In connection with Oconee Nuclear Station, Unit 1, which is in operation pursuant to the provisions of operating license DPR-38, please find attached an incident report relating to a reactor coolant pump oil fire which occurred on March 6, 1973. As a result of a comprehensive evaluation of this incident, it is concluded that the incident could not have any significant effect on the nuclear safety of the unit. However, the Directorate of Regulatory Operations, Region II, has requested that the incident should be considered an Unusual Event, as defined by Technical Specification 1.9(c), and therefore reportable under the provisions of Technical Specification 6.6.2.1B. Consequently, this report is submitted herewith for your information and dissemination to other applicants and licensees, as appropriate.

Sincerely,

A. C. Thies

A. C. Thies

ACT:vr
Attachment

cc: Mr. Norman C. Moseley, Director
Directorate of Regulatory Operations
Region II - Suite 818
230 Peachtree Street, Northwest
Atlanta, Georgia 30303

DUKE POWER COMPANY
OCONEE NUCLEAR STATION
MARCH 6, 1973, 1A1 REACTOR COOLANT PUMP OIL FIRE
INCIDENT REPORT

May 4, 1973

1.0 INTRODUCTION

On March 6, 1973, final, non-nuclear testing, prior to initial criticality, was in progress at Oconee Nuclear Station, Unit 1. In conjunction with this testing, difficulties were encountered while attempting to restart the 1A1 reactor coolant pump. It was subsequently determined that the pump was prevented from starting due to an interlock between the reactor coolant pump motor and its associated oil lift system. While personnel were in the process of assessing the operating status of the oil lift system an oil spill occurred. The reactor coolant system was at approximately 532°F at this time and the oil ignited upon contact with the exterior of reactor coolant system components, e.g., reactor coolant pump casing and reactor coolant system piping. Cooldown of the reactor coolant system, to eliminate the source of ignition, was immediately commenced and personnel attempted to control the existing fire. When the fire was extinguished, an evaluation of the post-incident conditions was initiated and recovery activities were started. Recovery activities were conducted in accordance with Duke Power Company's operational quality assurance program as outlined in the "Administrative Policy Manual for Operational Quality Assurance of Nuclear Stations." Particularly, activities affecting safety-related structures, systems and components were performed using approved, written procedures, as required. On April 11, 1973, the unit was returned to a status approximately equivalent to that which existed prior to the fire.

2.0 SEQUENCE OF EVENTS

The sequence of activities and events which preceded the occurrence of an oil fire in the vicinity of the 1A1 reactor coolant pump and which occurred until such time as the fire was extinguished at Oconee Nuclear Station, Unit 1, on March 6, 1973 are summarized as follows:

01:46 - 01:47	The four (4) reactor coolant pumps were shut down as a prerequisite to conducting TP/1/A/0200/12, "Reactor Coolant Pump Flow Test."
02:00 (Approximate)	The start of TP/1/A/0200/12 was delayed due to difficulties with the data recording equipment. Because of this delay it was decided to start reactor coolant pump 1A1 in order to maintain reactor coolant system temperature at approximately 532°F.
02:02:36	Reactor coolant pump 1A1 oil lift pumps on.
02:03:03	Reactor coolant pump 1A1 on.

02:03:14	Reactor coolant pump 1A1 at 100% full speed.
02:08:54	Reactor coolant pump 1A1 oil lift pumps off.
02:31:06	Reactor coolant pump 1A1 oil lift pumps on.
02:32:15	Reactor coolant pump 1A1 off.
02:35:08	Reactor coolant pump 1A1 at zero speed.
02:35:33	Reactor coolant pump 1A1 oil lift pumps off.
02:35-02:45 (Approximate)	The difficulties with the data recording equipment for TP/1/A/0200/12 had been resolved, and during this period background data at zero flow conditions were recorded. The test procedure then required that reactor coolant pump 1A1 be started.
02:46:34	Reactor coolant pump 1A1 oil lift pumps on.
02:47 (Approximate)	An unsuccessful attempt was made to start the 1A1 reactor coolant pump. Control panel indications were that the main breakers on the reactor coolant pump motor had not closed.
02:47:42	Reactor coolant pump 1A1 oil lift pumps off.
02:49:17	Reactor coolant pump 1A1 oil lift pumps on.
02:49:30 (Approximate)	Another unsuccessful attempt was made to start the 1A1 reactor coolant pump. As before, the main breakers on the reactor coolant pump motor would not close.
02:49:42	Reactor coolant pump 1A1 oil lift pumps off.
02:50 (Approximate)	Personnel were dispatched to check the oil level and local pressure gage on the 1A1 reactor coolant pump oil lift system, and to check the 1A1 reactor coolant pump motor and oil lift system relays in the cable room. It was subsequently determined that the oil lift pump discharge pressure relays had not closed.
02:56:09	The 1A1 reactor coolant pump oil lift pumps were started with personnel observing the local pressure gage on the AC oil lift pump. The gage indicated zero pressure.
03:01:48	Reactor coolant pump 1A1 oil lift pumps off.
03:15:02	The 1A1 reactor coolant pump oil lift pumps were again started to confirm the AC oil lift pump discharge pressure reading indicated earlier (02:56:09). Personnel verified the zero pressure reading.

03:21:56	Reactor coolant pump 1A1 oil lift pumps off.
03:40-04:00 (Approximate)	The Maintenance Supervisor and an Assistant Maintenance Supervisor were contacted concerning the difficulties being experienced with the 1A1 reactor coolant pump oil lift system and, subsequently, a Mechanic experienced with the oil lift system was called to the station to further evaluate the situation and initiate corrective action.
04:25 (Approximate)	The Mechanic previously called arrived at the station and was briefed further concerning the difficulties with the 1A1 reactor coolant pump oil lift system. It was decided to drain the oil from the reactor coolant pump motor. The Control Room was requested to place the 1A1 reactor coolant pump motor and oil lift system in a non-operative status and properly identify them as such.
05:10 (Approximate)	The required non-operative status of the 1A1 reactor coolant pump motor and the oil lift system was established and properly identified.
05:15-05:55 (Approximate)	Maintenance personnel commenced activities associated with the draining of oil from the upper bearing of the 1A1 reactor coolant pump motor. In the process of establishing flow from the upper bearing drain to a drum located in the reactor building basement a small quantity of oil leaked from a drain hose fitting and the oil drain line drain valve was closed to prevent further leakage. It was decided that before proceeding with draining of oil from the upper bearing that the oil on the reactor building floor should be wiped up to prevent it from entering the floor drains. The valve line-up which existed at this time is shown in Figure 1, and it can be seen that oil draining from the upper bearing was now entering the lower bearing via the lower bearing overflow line.
05:56:48	Reactor coolant pump 1A1 lower bearing high oil level alarm received in the Control Room.
05:57 (Approximate)	A Mechanic in the reactor building basement smelled oil smoke and observed dripping oil and a fire in the vicinity of the 28-inch inlet piping to the 1A1 reactor coolant pump.
06:00 (Approximate)	A fire alarm was received in the Control Room and the source of the alarm was identified as being the Unit 1 reactor building.
06:02 (Approximate)	The Shift Supervisor and Assistant Shift Supervisor arrived at the personnel hatch to the reactor building and confirmed the presence of a fire in the reactor building.

06:03 (Approximate)	The Control Room was notified to send all available personnel to the Unit 1 reactor building with fire fighting equipment and to immediately commence reactor coolant system cooldown. Attempts to extinguish the fire with available equipment were initiated.
06:10 (Approximate)	The Assistant Shift Supervisor returned to the Control Room and contacted the Operating Engineer to advise him of the situation.
06:15:23	The Unit 1 reactor building evacuation alarm sounded and personnel in the reactor building immediately exited the building.
06:20 (Approximate)	Health physics personnel were contacted. It was determined that the air filters associated with the radiation monitor which activated the evacuation alarm had become clogged by smoke and, therefore, a spurious alarm had been received and the reactor building was clear for entry.
06:20-06:40 (Approximate)	Personnel resumed attempts to extinguish the fire, but could not continue due to smoke in the reactor building and the elevated temperature of gratings and ladders providing access to the areas where flames had been observed.
06:45 (Approximate)	The Operating Engineer arrived at the station and proceeded directly to the Control Room. He verified that the nuclear status of the unit was safe and unaffected by the fire.
06:50 (Approximate)	The Station Superintendent arrived at the Control Room and was briefed on the status of the situation.
07:50 (Approximate)	Personnel entered the Unit 1 reactor building and did not observe any flames at this time. However, visibility was reduced due to smoke in the building.
08:35 (Approximate)	Personnel again entered the reactor building and reported evidence of a fire in the vicinity of the 1A1 reactor coolant pump.
09:40 (Approximate)	The Station Superintendent, Assistant Station Superintendent, Operating Engineer and other personnel entered the reactor building and verified that the fire was now limited to the vicinity of the 1A1 reactor coolant pump.
10:00 (Approximate)	The Operating Engineer, an Assistant Operating Engineer, the Construction Department Project Manager and other personnel entered the reactor building and succeeded in extinguishing the fire in the vicinity of the 1A1 reactor coolant pump.

10:20 (Approximate)	The Operating Engineer, an Assistant Operating Engineer and other personnel entered the reactor building and verified that the fire was extinguished.

3.0 POST-INCIDENT EVALUATION

Following verification that the fire was extinguished, station personnel and site Construction Department personnel began an appraisal of the post-incident situation. Subsequently, additional Duke Power Company and various vendor personnel were involved in this appraisal. By the evening of March 7, 1973, an initial evaluation of the condition of the unit had been completed. At this time a meeting was held at the site to discuss the information then available and to establish plans for recovery activities. Attendance at this meeting included Duke Power Company Senior Vice Presidents A. C. Thies and W. S. Lee. Following this meeting, further, detailed evaluations were made to better determine the condition of the various, affected structures, systems and components. These evaluations are summarized below:

a. 1A1 Reactor Coolant Pump Motor

Hardness testing of the motor shaft and shaft runout readings indicated that the shaft was unaffected by the fire. The motor oil reservoirs and bearings were checked and determined to be undamaged. The motor winding was electrically tested and no deterioration was apparent. In general, it was concluded that the operability of the motor stator and rotating assembly was unimpaired by the fire.

Junction boxes on the motor were damaged, including various components and wiring therein. In the case of main lead box, replacement of the current transformers, surge capacitors, terminal blocks, wiring and insulator supports was determined to be necessary. It was also determined that motor control wiring terminating in junction boxes and motor thermocouples required replacement.

An evaluation of oil and smoke residues deposited on the motor as a result of the fire, and of fire-affected paint on motor surfaces, indicated that these items should not interfere with continued, satisfactory operation of the motor. However, it was decided to clean and repaint the motor prior to placing it back in service. The motor main power leads were subjected to some heating and, while the cabling appeared to be intact and acceptable, replacement of the cables was recommended.

The operability of the motor oil lift system was not affected by the fire. However, the polyvinyl chloride (PVC) jackets on the oil lift system power cables sustained some damage and it was decided to replace these cables. To prevent a recurrence of a similar incident it was recommended that the reactor coolant pump motor drain and overflow system be revised.

b. 1A1 Reactor Coolant Pump Motor Stand

Vendor metallurgists examined the motor stand and their analyses indicated that the metal was structurally acceptable, but should be stress

relieved due to possible heat induced stresses. It was also determined that the motor stand had physically changed its dimensional envelope. It was recommended, therefore, that the motor stand be removed, flange welds inspected, stress relieved and machined to the as-built configuration.

c. 1A1 Reactor Coolant Pump

Static total indicated runout (TIR) measurements of the pump shaft were conducted. These measurements indicated that the shaft had developed a slight bend and was not suitable for continued operation. Replacement of the shaft was determined to be necessary.

The reactor coolant pump seal housing assembly was affected by the fire, as evidenced by the deterioration of O-rings and the loosening of bolts. It was decided that the seal housing should be removed, cleaned and refurbished; that the seals and O-rings should be replaced; and that replacement bolts should be obtained.

Examinations indicated that the reactor coolant pump casing and main flange were acceptable for continued service. It was recommended, however, that these items be cleaned and non-destructively examined to further substantiate this conclusion. It was also considered that the main flange studs were acceptable but that they should be removed, cleaned and hardness checked to verify that their material properties had remained satisfactory.

It was recommended that the 28-inch reactor coolant system inlet piping to the pump be cleaned to remove oil residues observed on the piping external surface.

d. Instrumentation and Mechanical Systems and Components in the Fire-Affected Area

Several instrumentation gages, level switches and sight glasses were found to be damaged by the fire and to require replacement. It was recommended that some instrumentation tubing be replaced and that other instrumentation tubing, valves and piping in the fire-affected area be cleaned, inspected, hydrotested and replaced, as appropriate.

Several valves, and one valve electric motor operator, in the localized fire-affected area were determined to require replacement. In addition, it was recommended that other valves in this area which exhibited evidence of being heated to temperatures other than normal be cleaned, disassembled, inspected and reassembled, with new packing and parts installed as required. General cleaning of valves, valve operators, valve operator chains, valve handwheels and valve chain wheels was also deemed necessary.

Inspection revealed that piping in this area was generally unaffected by the fire and was acceptable for continued operation. It was recommended, however, that flanged piping joints which exhibited evidence of being heated to temperatures other than normal be further examined and flange bolts retightened and gasket material replaced as required.

It was determined that several small piping hanger assemblies and some structural steel supports associated with such hanger assemblies had been affected by the fire and would require replacement. The condition of three (3), seismic, hydraulic suppressors on the reactor coolant pump motor was considered satisfactory but, due to the nature of these components, it was recommended that they be replaced.

e. Reactor Building Concrete and Structural Members

Concrete spalling occurred at one point on the primary shield wall and in one area of the reactor building basement floor. Swiss hammer test results indicated that the concrete in these affected areas exceeded design strength and, therefore, was acceptable for continued service. Adequate concrete coverage of reinforcing steel was also determined to exist. It was decided that the spalled area of the primary shield wall should be repainted and that the affected area of the basement floor should be repaired to prevent water puddling.

Examinations revealed one (1) structural steel member that was warped and required replacement. Also, it was recommended that one (1) section of platform grating be replaced or regalvanized.

f. 1A Steam Generator Skirt and Anchor Bolts

Examinations of the steam generator skirt and anchor bolt area indicated that this area was unaffected by the fire and that only general cleaning was required prior to resuming operation.

g. Mirror Insulation

Station and vendor personnel examined those sections of Mirror insulation which were affected by the fire. Approximately one hundred (100) items of insulation were determined to be damaged and to require replacement. Additional items which were smoked or residue coated were recommended for on-site cleaning.

h. Reactor Vessel Head

No physical damage, as a result of the fire, was observed in the area of the reactor vessel head, including the control rod drive cabling. However, due to the nature of this area, further evaluations and a thorough cleaning was recommended. It was deemed necessary to clean the reactor vessel head, associated components and the control rod drive cabling. It was also decided to non-destructively examine sections of two (2) control rod drive motor tubes to further verify their acceptability.

i. Reactor Building Purge, Cooling and Auxiliary Ventilation Systems

The interior of the reactor building purge system was found to be coated with residues as a result of the fire. A visual examination of the system filters indicated that the prefilters contained some residue but that the HEPA and carbon filters were unaffected. It was decided that the interior of the system should be cleaned to the extent to which

components were accessible. A sample of the charcoal from the carbon filters was sent off-site for evaluation of its iodine retention properties and it was recommended that, after cleaning of the system was completed, a freon absorption test be performed to further check the acceptability of these filters. It was also decided that, following completion of system cleaning, the $\Delta\rho$ across the prefilters and HEPA filters should be checked as an additional verification of their acceptability.

The interior of the reactor building cooling system was found to be coated with residues similar to those found in the purge system. Cleaning of the cooling units and ductwork was deemed necessary.

It was determined that the interior of the reactor building auxiliary ventilation system was coated with residues. It was recommended that the system fans be cleaned and that this system be operated, with filters on the discharges, to remove any non-adhering residues from the interior surfaces.

j. Reactor Building Cabling and Instrumentation

Initially, a general inspection and cleaning of reactor building instrumentation was performed. Subsequent to this, station and Design Engineering Department personnel performed another inspection of instrumentation and electrical equipment to determine their condition. Further action, such as additional cleaning, inspection, testing, replacement, etc., was recommended with regards to several items.

Reactor building and reactor building vent radiation monitors were inspected and tested and it was determined that no damage had occurred. It was recommended, however, that the sample lines for such monitors be flushed and cleaned to remove any residues which might impair the proper operation of the monitors.

The insulation on seven (7) nuclear instrumentation system cables was found to be damaged. The cables were tested and it was determined that their ability to perform their intended function had not been impaired. It was decided, however, that these cables should be replaced due to the condition of the insulation.

k. General Reactor Building Status

In addition to the particular items discussed above it was determined that, in general, surfaces within the reactor building were coated with smoke and oil residues. In several areas deposits of soot were also found. It was decided that these surfaces should be cleaned to the extent which was practicable and evaluations were conducted to determine an effective and acceptable cleaning method. A Dow Chemical Company proprietary cleaning solvent, Dow-102, was found to be an effective cleaning agent and laboratory analysis confirmed its acceptability for use. It was recommended, therefore, that accessible surfaces be cleaned by hand wiping with clean cloths and a solution of Dow-102 and water.

The coatings on some surfaces in the 1A steam generator cavity were damaged and it was recommended that these be repaired. It was estimated that approximately four hundred (400) square feet of concrete and two hundred (200) square feet of steel would require repainting.

1. Chemical Analyses

In conjunction with the determination of cleaning criteria for the various fire-affected structures, systems and components, analyses of fire residues were performed. These analyses determined that a significant percentage of the residue samples contained unacceptable, or marginally acceptable, concentrations of chlorides, and/or fluorides. The results of these analyses were considered in establishing the above-mentioned cleaning criteria, particularly where stainless steel or pressure boundary items were involved.

4.0 RESTORATION

Subsequent to the post-incident evaluation of the condition of the unit, measures were taken to restore the unit to an operable status. These restoration activities were planned and coordinated in order to respond to deficiencies, or possible deficiencies, which were determined to exist as a result of those comprehensive, post-incident evaluations. A summary of this restoration is as follows:

a. 1A1 Reactor Coolant Pump Motor

The reactor coolant pump motor was moved from the reactor building and damaged wiring and components were removed. The motor was thoroughly cleaned with a solution of detergent and water, followed by a demineralized water rinse. All external surfaces and appropriate internal surfaces of the motor were repainted. New wiring and components were installed to replace those which had been removed. The replacement wiring was electrically checked prior to reinstalling the motor. The motor main power leads and oil lift pump system power cables were replaced and electrically checked before being reconnected for operation. The motor drain and overflow system was revised in order to prevent a recurrence of a similar incident - refer to Figure 2.

b. 1A1 Reactor Coolant Pump Motor Stand

The reactor coolant pump motor stand was removed from the reactor building and transferred to an off-site facility for restoration. The motor stand flange welds were inspected, with no adverse indications being noted. The stand was stress relieved, then machined to restore it to the as-built configuration. In the process of restoring the stand's axial alignment, the nominal upper flange to lower flange dimension was decreased by a small amount. To compensate for this a ¼-inch, stainless steel shim was manufactured and inserted at the time the motor stand was reinstalled.

c. 1A1 Reactor Coolant Pump

The reactor coolant pump internals were moved from the reactor building and the damaged shaft was removed. A replacement rotating assembly - i.e., coupling, shaft and impeller - were shipped to the vendor for balancing. The seal housing was removed, cleaned and non-destructively examined to verify its integrity. No adverse indications were observed. Upon reassembly the seal housing bolts and damaged seals and O-rings were replaced.

The pump casing and main flange were non-destructively examined, with two (2) minor indications being revealed, which were readily corrected. The main flange studs were removed, cleaned and hardness checked. All studs were determined to be satisfactory for continued service.

The 28-inch reactor coolant system inlet piping to the pump was cleaned with a solvent and by wire brushing to remove oil residues deposited on the external surface of the piping.

d. Instrumentation and Mechanical Systems and Components in the Fire-Affected Area

Damaged instrumentation gages, level switches, sight glasses, valves, piping and tubing were replaced. Those instrumentation components which were checked and determined to be acceptable for continued operation were cleaned to remove smoke, oil and soot residues.

Those valves, and the one (1) valve electric motor operator, which had been damaged were replaced. Other valves in the fire-affected area which exhibited evidence of being heated to temperatures other than normal were cleaned, disassembled, inspected and reassembled. New packing was installed in the valves and in several instances parts replacement was deemed advisable. Flanged piping joints in this area were inspected and no significant damage was observed. General cleaning of mechanical systems and components in the fire-affected area was performed with items being repainted where necessary.

Damaged piping hanger assemblies and associated structural steel supports were replaced. The three (3), seismic, hydraulic suppressors on the reactor coolant pump motor were removed and new suppressors installed.

e. Reactor Building Concrete and Structural Members

The area of the primary shield wall where concrete spalling had occurred was cleaned, patched and repainted. That section of the reactor building basement floor which experienced concrete spalling was cleaned, patched and repainted. The structural steel member which had been warped by the fire was replaced and the section of fire damaged platform grating was replaced.

f. 1A Steam Generator Skirt and Anchor Bolts

The area of the 1A steam generator was cleaned to remove any residues which were present.

g. Mirror Insulation

Replacement sections for those items of Mirror insulation which were damaged by the fire were obtained from the vendor and installed. Insulation sections which were smoked or residue coated were cleaned in an acetic acid solution, followed by a demineralized water rinse, and reinstalled.

h. Reactor Vessel Head

The control rod drive position indicator tubes and stators were removed from the reactor vessel head and thoroughly cleaned. To facilitate cleaning of the reactor vessel head, twenty (20) control rod drive motor tubes were removed and cleaned. The remaining control rod drive motor tubes were cleaned in-place. Non-destructive examination of two (2) control rod drive motor tubes revealed no unacceptable indications. The reactor vessel head and its associated insulation were cleaned to remove any residues which were present. Control rod drive cabling was disconnected and cleaned to remove oil and smoke deposits which had adhered to the cabling surfaces.

i. Reactor Building Purge, Cooling and Auxiliary Ventilation Systems

To the extent to which it was accessible, the interior of the reactor building purge system was cleaned to remove residues which were present. Following completion of system cleaning, the $\Delta\rho$ across the prefilters and HEPA filters was checked and determined to be acceptable. Results of the off-site evaluation of the sample of charcoal from the carbon filters indicated that the iodine retention properties of the filters were unaffected by the fire. Also, following completion of system cleaning, a freon absorption test was performed which further verified that the carbon filters were satisfactory.

The reactor building cooling system cooling units and ductwork were cleaned to assure that they would function properly if required. The reactor building auxiliary ventilation system fans were cleaned and the system was operated, with filters on the discharges, until non-adhering residues had been removed from the interior surfaces of the system ductwork.

j. Reactor Building Cabling and Instrumentation

For those reactor building instrumentation items for which additional action such as cleaning, inspection, testing, replacement, etc. was recommended the appropriate follow-up action was taken. These actions reasonably assured the proper functioning of reactor building instrumentation prior to the unit returning to an operable status.

Reactor building and reactor building vent radiation monitor sample lines were flushed and cleaned to remove any residues which might impair their proper operation. The seven (7) nuclear instrumentation cables on which the insulation was damaged were replaced and electrically checked following installation.

k. General Reactor Building Status

Accessible reactor building surfaces were cleaned, as recommended, by hand-wiping with clean cloths and a solution of Dow-102 and water. Items which were cleaned included the reactor building liner plate, shield walls, fuel transfer canal surfaces, structural steel surfaces, equipment and component surfaces, piping, grating, handrails, ladders, cables and cable trays, ductwork, etc. Repainting of surfaces in the 1A steam generator cavity was performed where necessary.

l. Chemical Analyses

Following cleaning of surfaces within the reactor building, chemical analyses were performed to verify that no chemically adverse residues remained. The results of these analyses indicated that those concentrations of chlorides and fluorides which remained were within acceptable limits and in a significant percentage of cases concentrations were negligible.

5.0 RETEST

Following the completion of restoration activities the various, affected systems and components were tested, as appropriate, to verify their ability to perform their intended function. Those items which were retested included the reactor coolant pump assembly, the control rod drive system and those nuclear instrumentation system cables which were replaced.

Following reinstallation of the reactor coolant pump assembly, and the associated electrical and instrumentation verifications, a functional checkout of the pump was performed. This test was comparable to that conducted to verify the satisfactory operation of the Unit 1 reactor coolant pumps at the time of their initial installation. The pump was operated for a minimum of one (1) hour and the proper functioning of the pump's anti-reverse rotation devices, oil lift system, seal injection system and component cooling system was checked. Electrical and instrumentation parameters during operation were also verified.

Subsequent to reassembly of the control rod drive system a thorough check of this system was performed to assure its proper functioning. The minimum run current, latch current and unlatch current for each drive were determined to assure that these parameters were within specifications. A patch verification test was conducted to determine that all cabling had been correctly reconnected. Also, a control rod drive trip test was performed to assure that each drive would function when and as required.

Those nuclear instrumentation cables which had been replaced were tested to verify that the affected channels had been properly restored to an operable status. The cables were electrically checked to verify their integrity and continuity and a response test was performed to assure that the channels functioned as specified.

Following the above, specific tests, conducted on particular systems and components, final non-nuclear testing, prior to initial criticality, were resumed. For approximately one (1) week integrated, functional operation of the unit was conducted. This period of operation provided additional assurance of the integrity of the unit, and of those items affected, or possibly affected, by the fire.

6.0 SAFETY ANALYSIS

The magnitude of the fire which occurred was the maximum possible, as initial attempts to control the fire were unsuccessful and all available combustibles were consumed. The nuclear integrity of the unit was not violated, nor was any safety-related structure, system or component adversely affected to an extent that its proper functioning was impaired. Therefore, it is concluded that this incident did not have, and could not have, any significant nuclear safety implications.

7.0 CONCLUSION

Following the completion of appropriate recovery activities the unit was returned, on April 11, 1973, to a status approximately equivalent to that which existed prior to the fire. At this time the unit was at operating temperature and pressure and final, non-nuclear testing, prior to initial criticality, was resumed. Subsequently, Oconee Nuclear Station, Unit 1, successfully achieved initial criticality on April 19, 1973.

1A1 REACTOR COOLANT PUMP MOTOR DRAIN AND OVERFLOW SYSTEM
As of 05:55 March 6, 1973

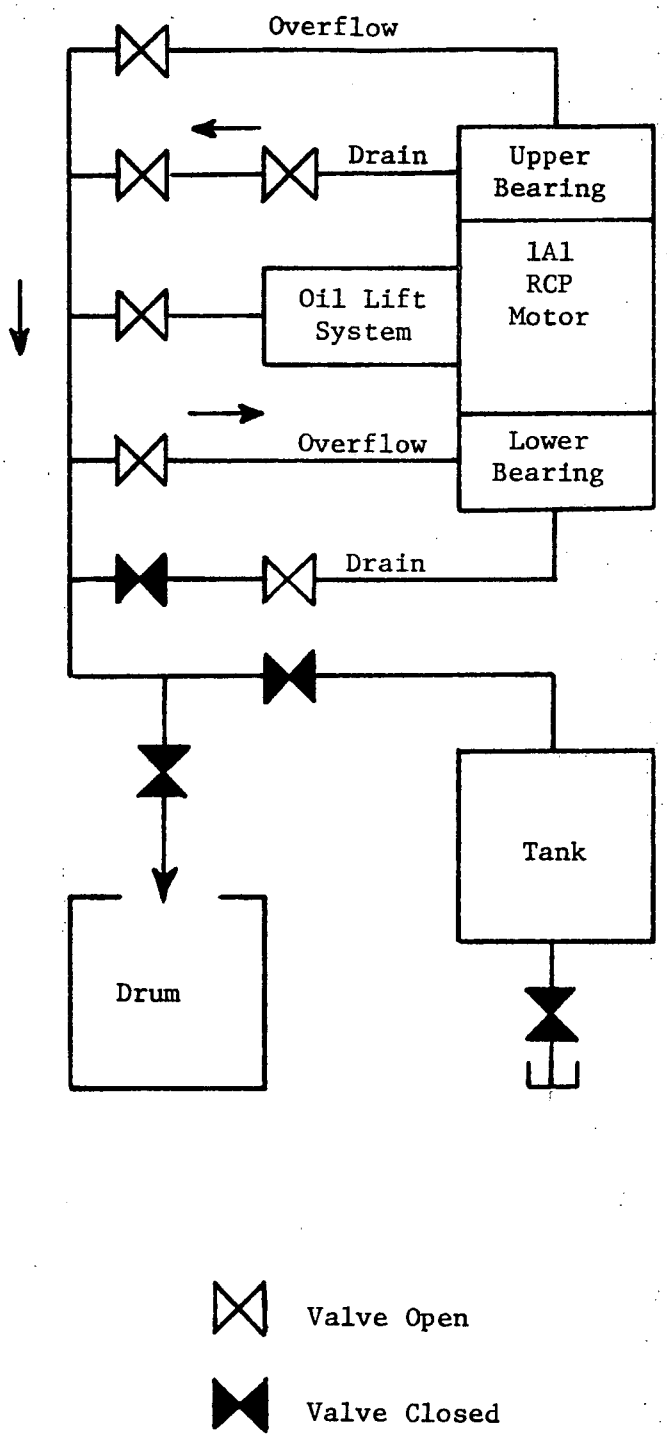

Figure 1

REVISED REACTOR COOLANT PUMP MOTOR DRAIN AND OVERFLOW SYSTEM
(Typical)

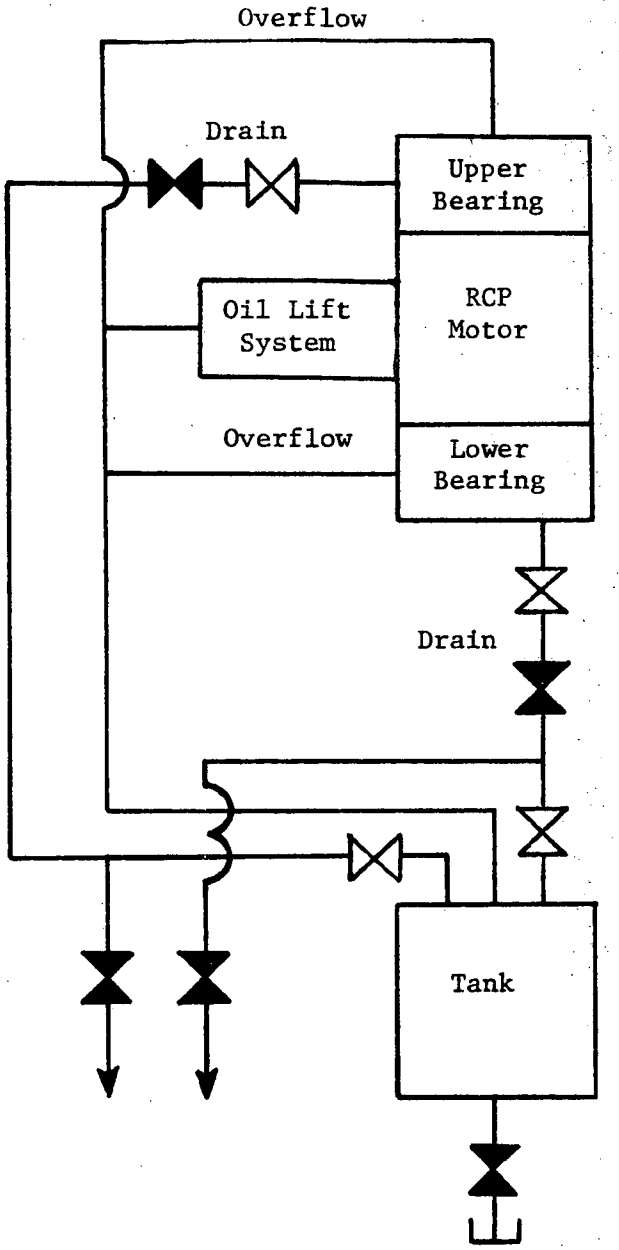

Valve Open

Valve Closed

Figure 2