GGNS LOT 2015 NRC INITIAL LICENSED OPERATOR WRITTEN EXAMINATION

RO EXAM

ANSWER KEY

1	C		26	D		51	C
2	C		27	B		52	D
3	C		28	B		53	B
4	B		29	B		54	C
5	B		30	C		55	C
6	A		31	D		56	A
7	D		32	A		57	B
8	A		33	D		58	A
9	D		34	A		59	C
10	A		35	C		60	D
11	D		36	A		61	C
12	D		37	A		62	A
13	B		38	B		63	C
14	B		39	B		64	A
15	B		40	C		65	D
16	A		41	C		66	B
17	D		42	B		67	B
18	C		43	B		68	C
19	D		44	B		69	D
20	B		45	A		70	A
21	A		46	D		71	B
22	D		47	D		72	B
23	C		48	C		73	B
24	A		49	D		74	A
25	A		50	B		75	D

Examination Outline Cross-Reference	Level	RO
295003 Partial or Complete Loss of AC. Knowledge of the reasons for the following responses as they apply to a partial or complete loss of A.C. power: AK3.01: Manual and auto bus transfer	Tier #	1
	Group #	1
	K/A #	295003: AK3.01
	Rating	3.3

Question 1

Due to partial loss of AC power, Inverter 1Y95 has automatically swapped to its alternate power supply.

Upon restoration of power to the normal power supply, what power supply is the inverter aligned to (with no operator action)?

The reason for the inverter response to the loss of power and power restoration is because it is a(n) _____ inverter.

A. Normal power supply
ESF

B. Normal power supply
BOP

C. Alternate power supply
ESF

D. Alternate power supply
BOP

Answer: C
Explanation: A. 1Y95 is an ESF inverter. ESF inverters will only swap back to its normal power supply manually and requires operator action. B. 1Y95 is not a BOP inverter, but could be confused with 1Y97 or 1Y98 which are BOP inverters. BOP inverters automatically sway back to its normal power supply upon restoration. C. 1Y95 is an ESF inverter. With no operator action, it remains on its alternate power supply. D. 1Y95 is not a BOP inverter, but could be confused with 1Y97 or 1Y98 which are BOP inverters. With no operator action 1Y95, will remain on its alternate power supply.
Technical References:

GLP-OPS-L62 Rev 13		
References to be provided to applicants during exam: **None**		
Learning Objective: **GLP-OPS-L62 Objective 4**		
Question Source:	Bank #	
(note changes; attach parent)	Modified Bank #	
	New	X
Question History:	Last NRC Exam	N/A
Question Cognitive Level:	Memory/Fundamental	
	Comprehensive/Analysis	X
10CFR Part 55 Content:	55.41(b)(7)	

Examination Outline Cross-Reference	Level	RO
295004 Partial or Total Loss of DC Power	**Tier #**	1
	Group #	1
Ability to determine and/or interpret the following as they apply to a partial or complete loss of D.C. power:	**K/A #**	295004: AA2.03
	Rating	2.8
AA2.03: Battery voltage		

Question 2

The plant is operating at rated power.

Power is suddenly lost to Div 3 battery charger 1C4 when its feeder breaker from MCC 17B01 trips open (breaker internal fault).

Which of the following identifies the initial response of 11DC bus voltage as indicated on control room panel P601?

A. Remains constant.

B. Lowers by 60 to 65 volts.

C. Lowers by 5 to 10 volts.

D. Goes to zero volts.

Answer: C

Explanation:

Unlike the Div 1 and Div 2 batteries which have two load-sharing chargers always connected, the Div 3 battery only has one charger (normally the 1C4 charger) connected at a time. Therefore, when that charger loses its MCC AC power source, it de-energizes and is no longer able to float the bus at the normal 5-10 volts above battery bank terminal voltage. As such, the resulting P601 battery bus indication will drop by 5 to 10 volts (i.e., the bus will now be carried by the battery itself).

A is wrong. This choice represents the response if the same failure were to occur for one of the Div 1 or Div 2 battery chargers (i.e., where the load-sharing charger would continue to float the bus at the normal float voltage); its plausibility should speak for itself in this regard.

B is plausible if applicant believes two chargers in series make 120VDC power supply. If one of the power supplies is removed, then voltage would be reduced to half of the original voltage.

D is plausible if applicant believes the DC busses are aligned similar to Div 3 AC bus. When the div 3 normal power supply is lost, the loads are shed and alternate power supply is automatically aligned and loads are sequenced back onto the bus. Division 3 DC bus does not have an alternate power supply automatically aligned..

Validation Results A. One RO choice		
Technical References: 04-1-01-L11-1, Plant DC SOI		
References to be provided to applicants during exam: **None.**		
Learning Objective: GLP-OPS-L1100, Objective 19		
Question Source:	Bank #	339
(note changes; attach parent)	Modified Bank #	
	New	
Question History:	Last NRC Exam	2011 NRC
Question Cognitive Level:	Memory/Fundamental	
	Comprehensive/Analysis	X
10CFR Part 55 Content:	55.41(b)(7)	

Examination Outline Cross-Reference	Level	RO
295005 Main Turbine Generator Trip	**Tier #**	1
	Group #	1
Ability to operate and/or monitor the following as they apply to main turbine generator trip:	**K/A #**	295005: AA1.02
	Rating	3.6
AA1.02: RPS		

Question 3

The plant is operating at 38% power.

The main turbine generator trips.

A malfunction with the Turbine Control Valves results in only the B & C Turbine Control Valves to close. (Fluid Pressures <30 psig)

What is the expected status of RPS?

A. Division 1 half scram

B. Division 2 half scram

C. Full scram.

D. No scram signal.

Answer: C

Explanation:

A. If student confuses with MSIV valve closure logic a division 1 half scram would be generated.
B. if student confuses with NSSSS logic B&C combination do cause isolation.
C. If reactor is operating >35.4 CTP, when the turbine trips and the B&C TSVs close the reactor will receive no scram signal. If the B&C TCVs close an automatic full scram signal will be generated.
D. If student assumes the TCV logic is the same as the TSV, then no scram signal will be generated.

Technical References:
GLP-OPS-C7100

References to be provided to applicants during exam:
None

Learning Objective:
GLP-OPS-C7100 Objective 9

Question Source:	Bank #	
(note changes; attach parent)	Modified Bank #	
	New	X
Question History:	Last NRC Exam	N/A
Question Cognitive Level:	Memory/Fundamental	X
	Comprehensive/Analysis	
10CFR Part 55 Content:	55.41(b)(6)	

Examination Outline Cross-Reference	Level	RO
295006 Scram	**Tier #**	1
	Group #	1
Knowledge of the interrelations between SCRAM and the following:	**K/A #**	295006 AK2.06
	Rating	4.2
AK2.06: Reactor Power		

Question 4

Which of the following reactor SCRAM signals is ***NOT*** bypassed due to reactor power level or position of the Mode Switch?

A. Reactor Vessel Water Level High

B. Reactor Vessel Water Level Low

C. Main Steam Line Isolation Valve Closure

D. APRM OPRM (Oscillation Power Range Monitor/THI)

Answer: B

Explanation:

A. Bypassed when reactor mode switch NOT in RUN.
B. Never bypassed.
C. Bypassed when reactor mode switch NOT in RUN.
D. Bypassed when outside enable region of power/flow map.

Technical References:
GFIG-OPS-C7100

References to be provided to applicants during exam:
None

Learning Objective:
GFIG-OPS-C7100 Objective 10

Question Source:	Bank #	
(note changes; attach parent)	Modified Bank #	
	New	X
Question History:	Last NRC Exam	N/A

Question Cognitive Level:	Memory/Fundamental	X
	Comprehensive/Analysis	
10CFR Part 55 Content:	55.41(b)(6)	

Examination Outline Cross-Reference	Level	RO
295016 Control Room Abandonment	**Tier #**	1
	Group #	1
For control room abandonment:	**K/A #**	295016 G2.4.35
	Rating	3.8
G2.4.35: Knowledge of local auxiliary operator tasks during an emergency and the resultant operation effects.		

Question 5

The control room has been abandoned due to a fire in panel P864.

Control of the plant has been established at the Remote Shutdown Panels (RSPs).

At local panel P152 (Area 25A, El. 111'), operators have placed the following switch in the ON position:

- Transfer Switch for Lockout Transfer Relay

What is the purpose of placing that switch in the ON position?

A. Isolate all Div 1 powered equipment from the control room.

B. Isolate equipment controlled from RSP P150 from the control room.

C. Isolate all Div 1 and 2 powered equipment from the control room.

D. Isolate equipment controlled from RSPs P150 and P151 from the control room.

Answer: B

Explanation:
A. Plausible because P150 contains division 1 equipment only. The transfer switch does not isolate ALL division one equipment from control room.
B. Per the site electrical drawings, C61-HSS-M150 energizes lockout relays on H22-P152 which electrically isolate components operated at the H22-P150 (Division 1) Remote Shutdown Panel from the Main Control Room. Other selected Division 1 powered/controlled equipment have isolations provided on Alternate Shutdown Panels and the Diesel Control Panel. Not all Division 1 equipment is affected by Alternate Shutdown /Remote Shutdown Panels and NO Division 2 equipment is affected.
C. Plausible because P150 and P151 are division one and division two equipment only. The transfer switch does not isolate ALL division one and two equipment from control room.
D. Plausible because P150 is isolated but the P151 is not and is manned at the same time.

Validation
Two people selected A.

Technical References:

05-1-02-II-1, Shutdown from Remote Shutdown Panels ONEP sections 1.3; 1.10; Attachments III, IV, and XXI. GLP-OPS-C6100		
References to be provided to applicants during exam: None		
Learning Objective: GLP-OPS-ONEP, objective 54; 55 GLP-OPS-C6100, objective 11		
Question Source:	Bank #	579
(note changes; attach parent)	Modified Bank #	
	New	
Question History:	Last NRC Exam	None
Question Cognitive Level:	Memory/Fundamental	X
	Comprehensive/Analysis	
10CFR Part 55 Content:	55.41(b)(7)	

Examination Outline Cross-Reference	Level	RO
295018 Partial or Total Loss of CCW	**Tier #**	1
	Group #	1
Ability to determine and/or interpret the following as they apply to partial or complete loss of component cooling water:	**K/A #**	295018 AA2.01
	Rating	3.3
AA2.01: Component temperatures		

Question 6

The plant is operating at 100% power.

The CRS has entered the Loss of CCW ONEP due to one pump running.

CCW has been isolated to Fuel Pool Cooling and RWCU, CRD pump oil temperature is reported to be at 137°F.

Reactor Recirculation pump bearing temperatures continue to rise causing the following alarm:

- 1H13-P680-3A-A8, RECIRC PMP/MTR A/B TEMP HI

What is the next required operator action?

A. Perform immediate actions for a complete loss of CCW

B. Reduce Core Flow to 70 mlbm/hr

C. Trip the Reactor Recirculation pumps ONLY

D. Isolate CCW to Containment

Answer: A

Explanation:

Per Loss of CCW ONEP when a complete loss is detected perform the immediate actions, complete loss is defined in the NOTE prior to Immediate actions that states to assume a complete loss when any of 4 items are reached. Two of the 4 have been reached, (1) Recirc Pump bearing temps cannot be maintained below their alarm setpoints and (2) CRD oil temp cannot be maintained less than 135.

'A' is correct

'B' is wrong this action would be taken if the recirc temps and crd temps were not elevated above the setpoints

'C' is wrong this action occurs after the reactor is manually scramed

'D' is taken when there is evidence of a pipe break in the containment.		
Technical References: GLP-OPS-P4200 GLP-OPS-B3300 05-1-02-V-1		
References to be provided to applicants during exam: **None**		
Learning Objective: GLP-OPS-ONEP Objective 2		
Question Source:	Bank #	2015 Biennial E2 Q15
(note changes; attach parent)	Modified Bank #	
	New	
Question History:	Last NRC Exam	None
Question Cognitive Level:	Memory/Fundamental	
	Comprehensive/Analysis	X
10CFR Part 55 Content:	55.41(b)(10)	

Examination Outline Cross-Reference	Level	RO
295019 Partial or Total Loss of Inst. Air	Tier #	1
	Group #	1
Knowledge of the reasons for the following responses as they apply to partial or complete loss of instrument air:	K/A #	295019: AK3.02
	Rating	3.5
AK3.02: Standby air compressor operations		

Question 7

The following Plant Air compressor (PAC) configuration currently exits:

PAC A in Standby
PAC B running
PAC C shutdown (idle)

An event occurred and all DGs have re-powered their buses.

Without operator action, 30 seconds after busses have been automatically restored no PACs are running and no cooling water is available.

What is the reason for the Total Loss of Air?

A. A 16AB Bus lockout occurred.

B. Only a LOP occurred.

C. Only a LOCA occurred.

D. A simultaneous LOP/LOCA occurred.

Answer: D
Explanation: A. Plausible because PAC A is powered from 16AB. Cooling water is not powered from 16AB. B. Plausible if PAC A and cooling water flow both lost power. C. LOCA shed trips and locks out PAC 'A'. LOCA interlocks closed the SSW 'B' valves to all PACs. D. The LOP/LOCA will shed PAC A and remove cooling water.
Technical References:

GLP-OPS-P5100		
References to be provided to applicants during exam: None		
Learning Objective: GLP-OPS-P5100 Obj 30, 31		
Question Source:	Bank #	
(note changes; attach parent)	Modified Bank #	
	New	X
Question History:	Last NRC Exam	None
Question Cognitive Level:	Memory/Fundamental	
	Comprehensive/Analysis	X
10CFR Part 55 Content:	55.41(b)(7)	

Examination Outline Cross-Reference	Level	RO
295021 Loss of Shutdown Cooling	**Tier #**	1
	Group #	1
Knowledge of the interrelations between loss of shutdown cooling and the following:	**K/A #**	295021 AK2.01
	Rating	3.6
AK2.01: Reactor water temperature		

Question 8

A refueling outage is in progress with RHR Shutdown Cooling (SDC) in operation.

RHR SDC is lost and no alternate means of decay heat removal is available.

Of the following situations, which would result in the **SHORTEST** amount of time for reactor vessel water temperature to reach 200°F?

If this loss of decay heat removal event were to happen…

A. prior to any core alterations and with the reactor cavity drained down.

B. prior to any core alterations and with the reactor cavity flooded up.

C. after core alterations have been completed and with the reactor cavity flooded up.

D. after core alterations have been completed and with the reactor cavity drained down.

Answer: A

Explanation:

Water temperature will increase the fastest for the situation where the core contains the greatest amount of irradiated fuel (i.e., pre-fuel shuffle) and is covered by the least amount of water (i.e., drained down, rather than flooded up).

All distracters are wrong but plausible because they each represent a real situation during which a loss of decay heat removal might occur and are accounted for on the “Time To Reach 200°F” Figures of the “Inadequate Decay Heat Removal” ONEP (05-1-02-III-1).

Technical References:

05-1-02-III-1, Inadequate Decay Heat Removal ONEP

References to be provided to applicants during exam:
None

Learning Objective: GLP-OPS-ONEP, Objective 2		
Question Source:	Bank #	360
(note changes; attach parent)	Modified Bank #	
	New	
Question History:	Last NRC Exam	2011
Question Cognitive Level:	Memory/Fundamental	
	Comprehensive/Analysis	X
10CFR Part 55 Content:	55.41(b)(14)	

Examination Outline Cross-Reference	Level	RO
295023 Refueling Acc	**Tier #**	1
	Group #	1
Knowledge of the operational implications of the following concepts as they apply to refueling accidents:	**K/A #**	295023 AK1.03
	Rating	3.7
AK1.03: Inadvertent criticality		

Question 9

For fuel handling operations, interlocks that prevent inadvertent criticality in the core and could lead to a refueling accident are the…

A. fuel handling platform bridge and trolley interlocks.

B. fuel handling platform main hoist interlocks.

C. refueling platform frame-mounted and monorail-mounted auxiliary hoist interlocks.

D. refueling platform bridge and main hoist interlocks.

Answer: D

Explanation:

A is wrong. The fuel handling platform is used exclusively at the spent fuel pool, not at the core. The choice is plausible to the Applicant who fails to recall the location.
B is wrong. The fuel handling platform is used exclusively at the spent fuel pool, not at the core. The choice is plausible to the Applicant who fails to recall the location.
C is wrong. Although these interlocks are on the refueling bridge, they have nothing to do with protection against adding excess reactivity; rather, they protect against hoist over-loading and hoist over-travel.
D is correct. The refueling platform bridge (Reverse Travel #1 & #2) and Main Hoist interlocks provide such excess reactivity addition protection, as described in the GLP-RF-F1101 lesson plan.

Technical References:
GLP-RF-F1101
04-1-01-F11-1, Refueling Platform SOI

References to be provided to applicants during exam:
None.

Learning Objective: GLP-RF-RF1101, Objective 25

Question Source:	Bank #	365
(note changes; attach parent)	Modified Bank #	
	New	

Question History:	Last NRC Exam	2011
Question Cognitive Level:	Memory/Fundamental	X
	Comprehensive/Analysis	
10CFR Part 55 Content:	55.41(b)(13)	

Examination Outline Cross-Reference	Level	RO
295024 High Drywell Pressure	**Tier #**	1
	Group #	1
Ability to determine and/or interpret the following as they apply to high drywell pressure:	**K/A #**	295024 EA2.02
	Rating	3.9
EA2.02: Drywell temperature		

Question 10

The plant is operating at 100% power.

A leak develops and drywell pressure steadies at 1.31 psig.

Without operator action, which of the following identifies an expected change due to the change in drywell pressure?

A. Drywell temperatures are rising.

B. LPCS surveillance using test return to suppression pool automatically secured.

C. RWCU flow secured.

D. RCIC exhaust vacuum breakers closed.

Answer: A

Explanation:

A. A group 6 isolation takes Chilled Water (P72) away from the drywell. Without operator action to re-open these isolation valves 30 seconds after the isolation signal, DW temperatures will begin to rise.
B. A group 5 isolation secures LPCS test line upon Drywell Pressure of 1.39 psig.
C. A group 8 isolation secures RWCU flow upon reactor vessel water level -41.6".
D. A group 9 isolation closes RCIC exhaust vacuum breakers upon Drywell Pressure of 1.39 psig.

Validation
One person selected C.

Technical References:
05-1-02-III-5, Automatic Isolations ONEP

References to be provided to applicants during exam:
None

Learning Objective: GLP-OPS-M7101 OBJ 30.1

Question Source:	Bank #	
(note changes; attach parent)	Modified Bank #	
	New	X
Question History:	Last NRC Exam	N/A
Question Cognitive Level:	Memory/Fundamental	X
	Comprehensive/Analysis	
10CFR Part 55 Content:	55.41(b)(7)	

Examination Outline Cross-Reference	Level	RO
295025 High Reactor Pressure	**Tier #**	1
	Group #	1
Knowledge of the interrelations between high reactor pressure and the following:	**K/A #**	295025 EK2.09
	Rating	3.9
EK2.09: Reactor Power		

Question 11

A reactor vessel steam dome high pressure scram signal should be the signal that **FIRST** generates a reactor scram on a(n):

A. turbine trip at full power

B. closure of all MSIVs at full power

C. single MSIV closure with reactor power at 75%

D. IPC fails causing Turbine control valves to close with reactor power at 75%

Answer: D

Explanation:

Interpreting reactor pressure involves determining if it is responding as expected.
A is wrong because the reactor will scram on Turbine stop valve closure or low trip oil pressure.
B is wrong because the reactor will scram on the main steam isolation valve closure.
C is wrong because this should not result in a scram.
D is correct. At less than RTP, the high pressure signal should precede the high power signal

Validation
One person selected B and one person selected C.

Technical References:
Mitigating of Core Damage (EPTS-2) Pressure Increase Events, GLP-OPS-MCD12
UFSAR section 5.2.2.2.3.1
Tech Spec Basis 3.3.1.1

References to be provided to applicants during exam:
None

Learning Objective:
GLP-OPS-MCD12 Obj 1

Question Source:	Bank #	1054
(note changes; attach parent)	Modified Bank #	

	New	
Question History:	Last NRC Exam	2014
Question Cognitive Level:	Memory/Fundamental	
	Comprehensive/Analysis	X
10CFR Part 55 Content:	55.41(b)(6)	

Examination Outline Cross-Reference	Level	RO
295026 Suppression Pool High Water Temp.	**Tier #**	1
	Group #	1
Ability to operate an/or monitor the following as they apply to suppression pool high water temperature:	**K/A #**	295026 EA1.03
	Rating	3.9
EA1.03: Temperature monitoring		

Question 12

The plant is operating at rated power with RCIC testing in progress.

Average Suppression Pool temperature has risen to 100°F.

Which of the following describes the required operator actions?

A. Place the Reactor Mode Switch to SHUTDOWN.
Enter EP-3 and place RHR in Suppression Pool Cooling.

B. Immediately secure RCIC.
Enter EP-3 and place RHR in Suppression Pool Cooling.

C. Place the Reactor Mode Switch to SHUTDOWN and enter EP-2.
Depressurize the reactor to <200 psig.

D. Enter EP-3 and place RHR is Suppression Pool Cooling.
Monitor Suppression Pool temperature.

Answer: D

Explanation:
At > 1% power and testing which adds heat to the suppression pool suppression pool temperature is allowed to go to 105°F. At > 95°F the required actions are to enter EP-3 at 95°F and place suppression pool cooling in service and monitor suppression pool temp not to exceed 105°F.

A is incorrect because Mode switch to shutdown is required at > 110°F.

B is incorrect because RCIC is secured immediately at >105°F.

C is incorrect because entry to EOP-2 is required at >110°F and depressurization is required at >120°F.

Technical References:
Tech Spec 3.6.2.1, Supp Pool Average Water Temperature
EP-3, PC Control

References to be provided to applicants during exam: **None.**		
Learning Objective: GLP-OPS-EP3TR obj 5		
Question Source:	Bank #	931
(note changes; attach parent)	Modified Bank #	
	New	
Question History:	Last NRC Exam	2008
Question Cognitive Level:	Memory/Fundamental	
	Comprehensive/Analysis	X
10CFR Part 55 Content:	55.41(b)(10)	

Examination Outline Cross-Reference	Level	RO
295027 High Containment Temperature	**Tier #**	1
	Group #	1
Knowledge of the operational implications of the following concepts as they apply to high containment temperature (Mark III containment only):	**K/A #**	295027 EK1.02
	Rating	3.0
EK1.02: Reactor water level measurement: Mark-III		

Question 13

A LOCA is in progress with the following:

- Wide Range level is -10”
- Fuel Zone level is -25”
- Upset Range level is 5”
- Shutdown Range level is 10”
- RPV pressure is 50 psig
- Drywell temperature (166 ft) = 220°F; (139 ft) = 190°F
- CTMT temperature (166 ft) = 155°F; (139 ft) = 150°F

Which of the reactor water level instruments **is/are** usable?

A. Fuel Zone Range, only

B. Fuel Zone Range and Wide Range, only

C. Fuel Zone Range, Wide Range, and Upset Range, only

D. Fuel Zone Range, Wide Range, Upset Range, and Shutdown Range

Answer: B

Explanation:
See EP-1 CAUTION 1. The DW and CTMT temperatures in the stem fall within the “safe zone” of the RPVST curve (Figure 2); therefore, there are no possible boiling concerns. This makes the Fuel Zone Range instrument completely valid and usable per Caution 1.1. Per Caution 1.2, a Wide Range, Upset Range, or Shutdown Range instrument may not be used if BOTH 1) indicated level is below a certain limit AND 2) DW or CTMT temperature at a specified elevation is above a certain limit. The indicated level for Wide Range (-10”) is above the specified limit (-131”); therefore, Wide Range is usable. The indicated level for Upset Range (5”) is below its limit (159”) AND the stem’s given DW temperature at the 166 ft elevation (220°F) is above the associated limit (195°F); therefore, Upset Range is not usable. The indicated level for Shutdown Range (10”) is below its limit (139”) AND the stem’s given DW temperature at the 166 ft elevation (220°F) is above the associated limit (66°F); therefore, the Shutdown Range is not usable.

All distracters are wrong but are plausible based on the Applicant's need to apply Caution 1 as already described.		
Technical References: EP-1, CAUTION 1		
References to be provided to applicants during exam: EP-1 CAUTION 1		
Learning Objective: GLP-OPS-EP02, Objective 8		
Question Source:	Bank #	364
(note changes; attach parent)	Modified Bank #	
	New	
Question History:	Last NRC Exam	2011
Question Cognitive Level:	Memory/Fundamental	
	Comprehensive/Analysis	X
10CFR Part 55 Content:	55.41(b)(6)	

Examination Outline Cross-Reference	Level	RO
295028 High Drywell Temperature	**Tier #**	1
	Group #	1
For high drywell temperature:	**K/A #**	295028 G2.1.7
	Rating	4.4
G2.1.7 Ability to evaluate plant performance and make operational judgments based on operating characteristics, reactor behavior, and instrument interpretation.		

Question 14

The following plant parameters exist:

RPV Level 12.4 inches (lowest level reached), rising
Drywell Temperature 137F, steady
Suppression Pool Level is 18.5 feet, steady
RHR room temperature 155F, steady (No associated alarms)

Based on given parameters, what Emergency Procedure(s) should the crew be entering?

A. EP-2, RPV Control, Only.

B. EP-3, Containment Control, Only.

C. EP-2, RPV Control, and EP-3, Containment Control.

D. EP-3, Containment Control, and EP-4, Auxiliary Building Control

Answer: B

Explanation:
Only Drywell Temperature limit has been reached (135F) for EP entry conditions.

A is wrong. Plausible if RPV level or drywell pressure entry conditions were met.

C is wrong. EP-3 is entered for high Drywell Temperature. Plausible if RPV level entry condition was met.

D is wrong. EP-3 is entered for high Drywell Temperature. Plausible if RHR room temperature entry condition was met.

Technical References:
05-S-01-EP–2, 05-S-01-EP–3, and 05-S-01-EP–4

References to be provided to applicants during exam: None

Learning Objective: GLP-EP–EPT19, Obj. 6.1		
Question Source:	Bank #	
(note changes; attach parent)	Modified Bank #	
	New	X
Question History:	Last NRC Exam	N/A
Question Cognitive Level:	Memory/Fundamental	
	Comprehensive/Analysis	X
10CFR Part 55 Content:	41(b)(10)	

Examination Outline Cross-Reference	Level	RO
295030 Low Suppression Pool Wtr Lvl	**Tier #**	1
	Group #	1
Ability to operate and/or monitor the following as they apply to low suppression pool water level:	**K/A #**	295030 EA1.06
	Rating	3.4
EA1.06: condensate storage and transfer (make-up to the suppression pool): Plant-specific		

Question 15

What system(s) can be used to makeup water to suppression pool from the CST?

A. RCIC only

B. RCIC and HPCS

C. HPCS only

D. HPCS and LPCS

Answer: B		
Explanation: A. Plausible if student only remembers that RCIC can makeup water to the suppression pool using the CST. B. RCIC and HPCS can both be used to makeup water to the suppression pool by taking suction from the CST and using the test return to add water to the suppression pool. C. Plausible if student only remembers that HPCS can makeup water to the suppression pool using the CST. D. Plausible if student remembers that both spray systems can makeup water to the suppression pool using the CST.		
Technical References: 04-1-01-E51-1, Reactor Core Isolation Cooling System, Section 6.4 04-1-01-E22-1, high Pressure Core Spray System, Section 6.4		
References to be provided to applicants during exam: **None**		
Learning Objective:		
Question Source:	Bank #	
(note changes; attach parent)	Modified Bank #	
	New	X

Question History:	Last NRC Exam	N/A
Question Cognitive Level:	Memory/Fundamental	X
	Comprehensive/Analysis	
10CFR Part 55 Content:	55.41(b)(8)	

Examination Outline Cross-Reference	Level	RO
295031 Reactor Low Water Level	**Tier #**	1
	Group #	1
Knowledge of the reasons for the following responses as they apply to reactor low water level:	**K/A #**	**295031: EK3.02**
	Rating	4.4
EK3.02: Core coverage		

Question 16

Per EP-2 basis for Alternate Level Control, what is reason to restore and maintain RPV level above -160 in. with one or more Table 1 systems?

A. To re-establish core cooling by submergence.

B. To maintain above minimum steam cooling level.

C. To maintain above minimum zero injection RPV Water Level without RPV injection.

D. To maintain above minimum spray cooling level.

Answer: A		
Explanation: A. EP basis states, any or all of the listed systems may be used, as necessary to reestablish core cooling by submergence. B. Adequate core cooling is assured if level is above minimum Steam Cooling RPV Water level. (-191 inches). C. Adequate core cooling is assured if level is above minimum zero injection RPV Water level (-204 inches). D. Adequate core cooling is assured if level is above spray cooling level (-217 inches). B, C, & D are plausible because they are all definitions of adequate core cooling.		
Technical References: 02-S-01-40, Attachment IV, p. 19 of 51, Step L-6 02-S-01-43, Transient Mitigation Strategy, Section 5.1		
References to be provided to applicants during exam: None		
Learning Objective:		
Question Source:	Bank #	
(note changes; attach parent)	Modified Bank #	
	New	X
Question History:	Last NRC Exam	N/A

Question Cognitive Level:	Memory/Fundamental	X
	Comprehensive/Analysis	
10CFR Part 55 Content:	55.41(b)(10)	

Examination Outline Cross-Reference	Level	RO
295037 SCRAM Condition Present and Reactor Power Above APRM Downscale or Unknown	**Tier #**	1
	Group #	1
	K/A #	295037 EK1.07
Knowledge of the operational implications of the following concepts as they apply to SCRAM condition present and reactor power above APRM downscale or unknown:	**Rating**	3.4
EK1.07: Shutdown margin		

Question 17

For which of the following conditions will shutdown margin be sufficient to allow EP-2A to be exited without obtaining concurrence from Reactor Engineering?

A. Cold Shutdown Boron weight has been injected with five control rods at position 48.

B. >50% of the control rods are at position 02 or beyond.

C. ONLY two peripheral control rods are at position 48.

D. ONLY one center core control rod is at position 48.

Answer: D

Explanation:
A. Distracter 1 is incorrect because reliance on boron to remain shutdown negates exiting EP-2A.
B & C are incorrect because even as inconsequential as the rod densities appear, they would still have to be analyzed by reactor engineering.

Per Tech Specs definitions, "SDM shall be the amount of reactivity by which the reactor is subcritical or would be subcritical assuming that: (c) All control rods are fully inserted except for the single control rod of highest reactivity worth, which is assumed to be fully withdrawn.

After a scram the crew can determine the reactor shutdown with only one control rod not full in. If more than one is withdrawn then a calculation must be performed.

Technical References:
05-S-01-PSTG
02-S-01-40, EP Technical Bases Att IV. pg 5 of 51
TS Bases B3.1.1

References to be provided to applicants during exam:
None.

Learning Objective: GLP-OPS-TS001, OBJ. 4.13

Question Source:	Bank #	873
(note changes; attach parent)	Modified Bank #	
	New	
Question History:	Last NRC Exam	2007
Question Cognitive Level:	Memory/Fundamental	X
	Comprehensive/Analysis	
10CFR Part 55 Content:	55.41(b)(10)	

Examination Outline Cross-Reference	Level	RO
295038 High Off-site Release Rate	**Tier #**	1
	Group #	1
Knowledge of the interrelations between high off-site release rate and the following:	**K/A #**	295038 EK2.03
	Rating	3.6
EK2.03: Plant ventilation systems		

Question 18

Which of the following is a reason for the automatic isolation feature of Auxiliary Building Ventilation?

A. Prevent the release of airborne radioactivity beyond ODCM limits from within the Turbine Building.

B. Ensure Auxiliary Building d/p is maintained negative.

C. Prevent untreated airborne radioactivity from being released off-site.

D. Ensure Auxiliary Building d/p is maintained positive.

Answer: C

Explanation:
"Normal" Secondary Containment ventilation is actually the combined Aux Bldg Ventilation (T41) and Fuel Handling Area Ventilation (T42) systems. These auto-isolate (and SGTS auto-initiates) on the associated vent exhaust high-high radiation conditions. In doing so, this isolation feature "prevents untreated airborne radioactivity from being released to the outside environment." This implies that although T41/T42 releases are untreated, SGTS is treated before its release.

B & D are wrong mainly because they do not speak directly to the fundamental "reason for the automatic isolation" described in the stem. They provide sufficient plausibility based on the fact that both the "normal" ventilation systems and SGTS also serve to maintain a negative building d/p.

A is wrong because the Turbine Building is not part of the Secondary CTMT boundary.

Technical References:
GLP-OPS-T4100
GLP-OPS-T4200
GLP-OPS-T4800
EP-2; EP-4

References to be provided to applicants during exam:
None.

Learning Objective: GLP-OPS-T4200, OBJ. 4A

Question Source:	Bank #	413
(note changes; attach parent)	Modified Bank #	

	New	
Question History:	Last NRC Exam	2013
Question Cognitive Level:	Memory/Fundamental	X
	Comprehensive/Analysis	
10CFR Part 55 Content:	55.41(b)(9)	

Examination Outline Cross-Reference	Level	RO
600000 Plant Fire On Site	**Tier #**	1
	Group #	1
Ability to determine and interpret the following as they apply to plant fire on site:	**K/A #**	600000 AA2.17
	Rating	3.1
AA2.17: Systems that may be affected by the fire		

Question 19

A fire is in progress in room 1A221.

That room's fire suppression system has automatically gone into service.

Which of the following describes how the fire suppression system is impacting plant SAFE SHUTDOWN equipment?

A. The LPCI 'B' Injection Valve (E12-F042B) drive motor is being wetted down by fire water.

B. The SSW Inlet Valve To DG12 Water Cooler (P41-F018B) drive motor is immersed in CO2.

C. Cabling for DG12 Outside Air Fan (X77-C001B) is being wetted down by fire water.

D. Cabling for Battery Charger 1B5 is immersed in CO2.

Answer: D

Explanation:
See GGNS Fire Pre-Plan, Volume 1, specifically pre-plan A-16, where we see that Total CO2 Flooding is the <u>only</u> automatic fire suppression for Zone 1A221. See procedure 10-S-03-2, Response To Fires, Attachment IV, page 131 of 211, for Zone 1A221, where we find the Safe Shutdown Equipment (or cabling for such) located in that zone. See the same procedure, Attachment III, page 1 of 2, specifically "General Note" #2, which explains the use of the 'C' and 'D' designators for the equipment in each Attachment IV fire zone. Only cabling for, not the 1B5 charger itself, is located in this zone ('C' designator), and this zone uses an automatic CO2 flooding system.

A. Plausible because 1E12-F042C cabling is located in Zone 1A221 not the drive motor.
B. Plausible because 1P41-F018B cabling is located in Zone 1A221 not the drive motor.
C. Plausible because X77-C001B cabling is located in this zone, but the zone uses CO2 flooding system not fire water.
D. Correct.

Technical References:
GGNS Fire Pre-Plans, Volume 1
10-S-03-2, Response To Fires

References to be provided to applicants during exam: 10-S-03-2: cover page; Attachment III, both pages; Attachment IV, pages 125 through 135 GGNS Fire Pre-Plans Volume 1: cover page; all 8 pages of the "INDEX ROOM NUMBER" section; pre-plans A-14 through A-18		
Learning Objective: GLP-OPS-PROC Obj 58		
Question Source:	Bank #	148
(note changes; attach parent)	Modified Bank #	
	New	
Question History:	Last NRC Exam	2012
Question Cognitive Level:	Memory/Fundamental	
	Comprehensive/Analysis	X
10CFR Part 55 Content:	55.41(b)(10)	

Examination Outline Cross-Reference	Level	RO
700000 Generator Voltage and Electric Grid Disturbances **For generator voltage and electric grid disturbances:** **G2.4.45: Ability to prioritize and interpret the significance of each annunciator or alarm.**	**Tier #**	1
	Group #	1
	K/A #	700000: G2.4.45
	Rating	4.1

Question 20

The plant is operating at 100% power.

Following an electrical grid transient, the following annunciators and indications are received on the P680:

9A-B1 TSE-STU CAB FAIL
Operator reports TSE Cabinet failure.

9A-D9 GEN UNDERFREQ
Generator frequency reads 55.5 Hz.

9A-E-8 GEN UNDERVOLT
Generator voltage currently reads 22.5 kV.

9A-E10 MN XFMR PH-A TROUBLE
Operator reports 125 VDC Prime Power Failure Alarm from P315.

Which of the listed annunciators and indications would require operators to prioritize to immediately scram the reactor if not already completed?

A. TSE-STU CAB FAIL

B. GEN UNDERFREQ

C. GEN UNDERVOLT

D. MN XFMR PH-A TROUBLE

Answer: B

Explanation:
A. Plausible because a TSE fault condition will prevent the turbine generator speed or load reference signal from changing. Immediate operator action is only required to prevent possible turbine generator damage if starting up and at the critical speed range. The generator is not starting up at the critical speed range because the plant is at 100%.
B. Correct. If generator frequency decreases to 57 Hz the generator will trip, the turbine will trip, and the reactor will scream. If this automatic action has not occurred, the reactor operator should take manual control of the required automatic action.
C. Plausible because GFIG-OPS-N4151 states Generator volts/hertz is a cause for the generator unit trip. ARI states no auto actions associated with alarm.
D. Plausible because GFIG-OPS-N4151 states Phase B/C Generator Differential is a cause for the generator unit trip.

Validation
5 people selected C Gen Undervoltage 19.5 Hz

Technical References:
GFIG-OPS-N4151, Tables 1 and 2
05-1-02-I-4, Loss of AC Power ONEP, Section 3.4 Grid Instability
04-1-02-1H13-P680, Alarm Response Instruction
EN-OP-115 Section 5.2

References to be provided to applicants during exam:
None

Learning Objective:

Question Source:	Bank #	
(note changes; attach parent)	Modified Bank #	
	New	X
Question History:	Last NRC Exam	N/A
Question Cognitive Level:	Memory/Fundamental	
	Comprehensive/Analysis	X
10CFR Part 55 Content:	55.41(b)(7)	

Examination Outline Cross-Reference	Level	RO
295009 Low Reactor Water Level	**Tier #**	1
	Group #	2
Knowledge of the operational implications of the following concepts as they apply to low reactor water level:	**K/A #**	295009 AK1.05
	Rating	3.3
AK1.05: Natural circulation		

Question 21

The plant is scrammed due to a trip of both reactor recirculation pumps.

Reactor water level is being maintained at 85" on Shutdown Range.

Which of the following will be the effect on natural circulation flow rate if reactor water level is lowered below the steam separators?

A. Flow rate will significantly decrease due to the loss of communication between the core and the annulus.

B. Flow rate will decrease initially and then increase to a new thermal equilibrium value slightly less than the original flow rate.

C. Flow rate will increase to a new stable value as the temperature of the water in the core increases to a new stable value.

D. Flow rate will not be significantly affected because the thermal driving head is primarily dependent on the differential temperature between the core and the annulus.

Answer: A

Explanation:
Per FSAR 4.4.3.6, the natural circulation achieved a lower vessel levels "are minimums, it should be noted that the flow rates would be the lowest flow achieved." Therefore, as water level is lowered the natural circulation flow rate will also lower and not return to the original value. This is especially true once reactor water level is below the steam separators at a level of 82". This is also the reason for actions in the SCRAM ONEP to raise reactor water level above 82" to allow for maximum natural circulation.

Technical References:
FSAR 4.4.3.6
05-1-02-I-1 Reactor Scram ONEP, section 3.10.5

References to be provided to applicants during exam:
None

Learning Objective: GLP-OPS-MCD01 Obj 3.2		
Question Source:	Bank #	604
(note changes; attach parent)	Modified Bank #	
	New	
Question History:	Last NRC Exam	2013
Question Cognitive Level:	Memory/Fundamental	
	Comprehensive/Analysis	X
10CFR Part 55 Content:	55.41(b)(5)	

Examination Outline Cross-Reference	Level	RO
295011 High Containment Temperature	**Tier #**	1
	Group #	2
For High Containment Temperature:	**K/A #**	**295011: G 2.4.1**
	Rating	4.6
G 2.4.1 Knowledge of EOP entry conditions and immediate action steps.		

Question 22

Which of the following contains an EP entry condition and associated action?

A. Suppression pool temperature 94F. Operate all available SP cooling.

B. RPV pressure 1050 psig. Stabilize RPV pressure with one or more RPV pressure control system.

C. Drywell pressure 1.2 psig. Vent the primary CTMT to control pressure.

D. Containment temperature 98F. Operate all available CTMT cooling.

Answer: D		
Explanation: A. Suppression pool temperature entry condition is above 95F. Immediate action is to operate all SP cooling. B. RPV Pressure entry condition is 1064.7 psig. Correct associated action. C. Drywell pressure entry condition is above 1.23 psig. Immediate action is to maintain CTMT pressure below 1.23 psig with CTMT purge. D. Per EP-3, containment temperature entry condition is above 95F. Immediate action is to operate all available CTMT cooling.		
Technical References: EP-2 & 3		
References to be provided to applicants during exam: None		
Learning Objective:		
Question Source:	Bank #	
(note changes; attach parent)	Modified Bank #	
	New	X
Question History:	Last NRC Exam	N/A
Question Cognitive Level:	Memory/Fundamental	
	Comprehensive/Analysis	X

10CFR Part 55 Content:	55.41(b)(10)	

Examination Outline Cross-Reference	Level	RO
295014 Inadvertent Reactivity Addition	**Tier #**	1
	Group #	2
Ability to operate and/or monitor the following as they apply to inadvertent reactivity addition:	**K/A #**	295014: AA1.05
	Rating	3.9
AA1.05: Neutron monitoring		

Question 23

A reactor normal startup is in progress.

A feedwater malfunction results in inadvertent reactivity addition.

Operators noted the following IRM counts upon reaching criticality.
(Recorded every 30 seconds.)

Min:Sec	
00:00	30/125
00:30	45/125
01:00	60/125
01:30	90/125

What is the reactor period?

A. 43.2 seconds

B. 64.8 seconds

C. 86.4 seconds

D. 129.6 seconds

Answer: C

Explanation:

A. Period = 1.44 X counts when critical = 1.44 X 30 = 43.2 seconds
B. Period = 1.44 X counts when 150% = 1.44 X 45 = 64.8 seconds
C. Period = 1.44 X doubling time = 1.44 X 60 seconds = 86.4 seconds
D. Period = 1.44 X total time logged = 1.44 X 90 = 129.6 seconds

Technical References:

03-1-01-1, Cold Shutdown to Generator Carrying Minimum Load IOI, Attachment VI, Step 47		
References to be provided to applicants during exam: None		
Learning Objective:		
Question Source:	Bank #	
(note changes; attach parent)	Modified Bank #	
	New	X
Question History:	Last NRC Exam	N/A
Question Cognitive Level:	Memory/Fundamental	
	Comprehensive/Analysis	X
10CFR Part 55 Content:	55.41(b)(1)	

Examination Outline Cross-Reference	Level	RO
295015 Incomplete SCRAM	**Tier #**	1
	Group #	2
Knowledge of the reasons for the following responses as they apply to incomplete SCRAM:	**K/A #**	295015: AK3.01
	Rating	3.4
AK3.01: Bypassing rod insertion blocks		

Question 24

What is reason for inserting Attachment 20 during an ATWS?

A. Defeat RC& IS control rod drive blocks.

B. Defeat RHR SDC injection valves isolation interlocks.

C. De-energizing scram solenoids.

D. Manually venting scram air header.

Answer: A		
Explanation: A. Attachment 20 is used to defeat RC&IS control rod drive blocks and allow control rod insertion irrespective of main turbine 1st stage pressure or control rod pattern. B. Attachment 12 is used for defeating all RHR SDC injection valve isolation interlocks and allow RPV injection outside core shroud during an ATWS. C. Attachment 21 is used to de-energize all scram solenoids during an ATWS. D. Attachment 23 is used for manually venting scram air header at CRD flow control station. Validation One person selected D.		
Technical References: 05-S-01-EP-1		
References to be provided to applicants during exam: None		
Learning Objective:		
Question Source:	Bank #	
(note changes; attach parent)	Modified Bank #	
	New	X

Question History:	Last NRC Exam	N/A
Question Cognitive Level:	Memory/Fundamental	X
	Comprehensive/Analysis	
10CFR Part 55 Content:	55.41(b)(10)	

Examination Outline Cross-Reference	Level	RO
295034 Secondary Containment Ventilation High Radiation **Knowledge of the interrelations between secondary containment ventilation high radiation and the following:** **EK2.04: Secondary containment ventilation**	**Tier #**	1
	Group #	2
	K/A #	295034 EK2.04
	Rating	3.9

Question 25

Which of the following will cause an automatic isolation of Secondary Containment?

A. Fuel Handling Area Exhaust rad monitor 'A' at 4.0 mR/hr <u>with</u>
Fuel Handling Area Exhaust rad monitor 'D' INOP trip

B. Fuel Pool Sweep Exhaust rad monitor 'A' at 35 mR/hr <u>with</u>
Fuel Pool Sweep Exhaust rad monitor 'C' at 40 mR/hr

C. Fuel Handling Area Exhaust rad monitor 'B' at 5.0 mR/hr <u>with</u>
Fuel Handling Area Exhaust rad monitor 'D' at 3.0 mR/hr

D. Fuel Pool Sweep Exhaust rad monitor 'B' at 25 mR/hr <u>with</u>
Fuel Pool Sweep Exhaust rad monitor 'C' INOP trip

Answer: A

Explanation:
Whether it be the Fuel Handling Area or the Fuel Pool Sweep Exhaust Vents, the only rad monitor combination that satisfies the required logic is the channels 'A' + 'D' combination, or channels 'B' + 'C'.

The Fuel Handling Area channel 'A' rad monitor is above the trip setpoint of 3.6 mR/hr <u>and</u> the channel 'D' rad monitor is providing the other half of the required logic with a valid INOP trip making the answer correct.

B is wrong because it suggests a wrong channel combination.

C is wrong because it shows the wrong coincidence combination (B + D) and because the Fuel Handling Area 'D' rad monitor being below the trip setpoint (for Secondary CTMT isolation) of 3.6 mR/hr. It is plausible because it represents two possible channel combinations.

D is wrong because although a proper channel combination exists, FPS channel 'B' is below the 30 mR/hr setpoint.

Technical References:
ARI Windows 04-1-02-1H13-P601-19A-B9 & B10
GLP-OPS-T4801
Auto Isolations ONEP

References to be provided to applicants during exam: **None**		
Learning Objective: GLP-OPS-T4801, Objective 8.6		
Question Source:	Bank #	349
(note changes; attach parent)	Modified Bank #	
	New	
Question History:	Last NRC Exam	2011
Question Cognitive Level:	Memory/Fundamental	
	Comprehensive/Analysis	X
10CFR Part 55 Content:	55.41(b)(11)	

Examination Outline Cross-Reference	Level	RO
295035 Secondary Containment High Differential Pressure	**Tier #**	1
	Group #	2
	K/A #	295035 EA2.01
Ability to determine and/or interpret the following as they apply to secondary containment high differential pressure:	**Rating**	3.8
EA2.01: Secondary containment pressure: Plant-specific		

Question 26

Auxiliary Building Ventilation (T41) and Fuel Handling Area Ventilation (T42) are in service when, per design, the Fuel Handling Area Ventilation Pressure Control Damper T42-F021 partially throttles closed (from its previous position).

What has this change in F021's position done within the secondary containment ventilation system, and what condition caused this F021 response?

A. Less secondary containment air flow is being supplied to the T42 exhaust fans. It re-positioned because the secondary containment d/p became less negative.

B. Less outside air flow is being supplied to the T42 supply fans. It re-positioned because the secondary containment d/p became more negative.

C. Less secondary containment air flow is being supplied to the T42 exhaust fans. It re-positioned because the secondary containment d/p became more negative.

D. Less outside air flow is being supplied to the T42 supply fans. It re-positioned because the secondary containment d/p became less negative.

Answer: D

Explanation:
See simplified Figure 1 from training material GFIG-OPS-T4200 (or P&ID M-1104A). Pressure Control Damper F021 is on the inlet side of the T42 supply fans. When it throttles in the closed direction less outside air flow is being supplied to the T42 supply fans. There is no such damper associated with the T42 exhaust fans. Therefore the condition now is that the T42 exhaust fans are still exhausting Fuel Handling Area air to the outside at the same capacity as before the F021 position change. Thus, with less outside air coming in and the same inside air going out, the result is that the d/p becomes greater (i.e., more negative). F021 responded to a condition where, for whatever reason, its controller sensed a d/p that had become less negative.

At GGNS all these distracters have been proven to readily discriminate for one or both of two reasons: 1) many examinees cannot recall where the F021 damper is located in the T42 system (supply versus exhaust); 2) many examinees struggle with the concept of "more negative" versus "less negative" d/p. Therefore, these choices are plausible.

Technical References: GFIG-OPS-T4200, T42 System Figures P&ID M-1104A, Fuel Handling Area Ventilation System		
References to be provided to applicants during exam: **None**		
Learning Objective: GLP-OPS-T4200 Obj 4,8		
Question Source:	Bank #	114
(note changes; attach parent)	Modified Bank #	
	New	
Question History:	Last NRC Exam	2012
Question Cognitive Level:	Memory/Fundamental	
	Comprehensive/Analysis	X
10CFR Part 55 Content:	55.41(b)(8)	

Examination Outline Cross-Reference	**Level**	RO
295036 Secondary Containment High Sump/Area Water Level	**Tier #**	1
	Group #	2
	K/A #	295036: EK2.03
Knowledge of the interrelations between secondary containment high sump area water level and the following: **EK2.03: Radwaste**	**Rating**	2.8

Question 27

A Fire Water Protection Deluge valve has ruptured in the Auxiliary Building causing the Auxiliary Building Floor Drain Transfer Tank to fill quickly.

Where can the contents of the Auxiliary Building Floor Drain Transfer Tank be sent to?

A. Waste Surge Tank

B. Floor Drain Collector Tank in Radwaste

C. Equipment Drain Collector Tank in Radwaste

D. Floor Drain Stabilizing Sump and Oil Separator

Answer: B
Explanation: When the level in sump reaches the Hi level setpoint, the A sump pump starts and pumps the waste from the sump. The applicant must remember the sump pumps are normally in standby and start on

the Hi level setpoint. The pumps also have a hi hi level setpoint that actuates additional alarms.

A. Plausible because Turbine Building Floor Drains are normally aligned to Waste Surge Tank because of chemistry.
B. Outlet flow from the Auxiliary Building Floor Drain Transfer Tank may be sent to the Floor Drain Collector Tank in Radwaste and Suppression Pool.
C. Plausible because Auxiliary Building Equipment Drain Transfer Tank is sent to the Equipment Drain Collector Tank in Radwaste.
D. Plausible because Turbine Building Floor Drains can also be aligned to the Floor Drain Stabilizing Sump and Oil Separator.

Validation
Two people selected A.

Technical References:
GLP-OPS-P4500
GFIG-OPS-P4500 Figure1, 2 & 6

References to be provided to applicants during exam:
None

Learning Objective: GLP-OPS-P4500, 7.1

Question Source:	Bank #	1022
(note changes; attach parent)	Modified Bank #	
	New	
Question History:	Last NRC Exam	None
Question Cognitive Level:	Memory/Fundamental	
	Comprehensive/Analysis	X
10CFR Part 55 Content:	55.41(b)(7)	

Examination Outline Cross-Reference	Level	RO
203000 RHR/LPCI: Injection Mode	**Tier #**	2
	Group #	1
Ability to predict an/or monitor changes in parameters associated with operating the RHR/LPCI: Injection Mode (Plant Specific) controls including:	**K/A #**	203000 A1.01
	Rating	4.2
A1.01: Reactor water level		

Question 28

The plant is operating at rated power when a LOCA occurs in the Drywell.

The RPV leak rate is approximately 1000 gpm.

RHR 'A' auto-initiates and is the <u>only</u> available source of makeup.

At which of the following points in the event timeline should the operator expect to see reactor water level start to recover (i.e., level stops lowering and begins to rise)?

When…

A. reactor pressure lowers to about 450 psig

B. reactor pressure lowers to about 250 psig

C. the RHR A ACTUATED annunciator is received

D. the LPCS/LPCI A INJ VLV RPV PRESS LO annunciator is received

Answer: B

Explanation:
Per the RHR SOI (04-1-01-E12-1), section 5.4.1.c, the RHR pump shutoff head is about 285 psig; therefore.

A is plausible because RHR A injection shutoff valve (E12-F042 can be manually opened from the control room only if LPCI line pressure is <450 psig and containment spray initiation signal is not present. (Table 2 E12 lesson plan)

C is incorrect because this annunciator is received very early in the event timeline when a LOCA signal is generated (1.39 psig in drywell or -150.3" reactor water level); see ARI P601-20A-B5. Plausible if applicant determines actuated alarm also means injecting.

D is incorrect because this annunciator is received when reactor pressure lowers to 476 psig, signifying the opening permissive point for the LPCI injection valve (see ARI P601-21A-F7). Plausible if applicant determines that the valve is open, therefore water is injecting.

Technical References:
04-1-01-E12-1, RHR System SOI, Section 5.4.1
ARI P601-20A-B5, annunciator window
ARI P601-21A-F7, annunciator window
04-1-01-N19-1, Condensate System SOI, Section 4.1.2

References to be provided to applicants during exam:
None

Learning Objective: GLP-OPS-E1200 obj 20

Question Source:	Bank #	852
(note changes; attach parent)	Modified Bank #	
	New	
Question History:	Last NRC Exam	2008
Question Cognitive Level:	Memory/Fundamental	
	Comprehensive/Analysis	X
10CFR Part 55 Content:	55.41(b)(8)	

Examination Outline Cross-Reference	Level	RO
205000 Shutdown Cooling	**Tier #**	2
	Group #	1
Knowledge of shutdown cooling system (RHR shutdown cooling mode) design feature(s) and/or interlocks which provide for the following:	**K/A #**	205000: K4.03
	Rating	3.8
K4.03: Low reactor water level: Plant-specific		

Question 29

Which isolation signal will close ALL of the following valves?

E12-F008 RHR SHUTDN CLG OTBD SUCT VLV
E12-F023 RHR B FLO TO HD SPR
E12-F037A RHR A TO CTMT POOL
E12-F053A RHR A SHUTDN CLG RTN TO FW

A. High Reactor Vessel Pressure 135 psig

B. Low Reactor Vessel Water Level 11.4 inches

C. High Drywell pressure 1.23 psig

D. High RCIC Room Ambient Temperature 185F

Answer: B		
Explanation: A. High reactor vessel pressure will isolate all valves except for E12-F037A. B. This is the correct answer per Automatic Isolations ONEP. C. High Drywell Pressure will only isolate the E12-F037A. D. This is an isolation signal for a Group 4 (Steam Supply to RHR and RCIC) isolation. Plausible if the candidate confuses a group 4 signal with a group 3 signal.		
Technical References: 05-1-02-III-5, Automatic Isolations ONEP		
References to be provided to applicants during exam: None		
Learning Objective:		
Question Source:	Bank #	

(note changes; attach parent)	Modified Bank #	
	New	X
Question History:	Last NRC Exam	N/A
Question Cognitive Level:	Memory/Fundamental	
	Comprehensive/Analysis	X
10CFR Part 55 Content:	55.41(b)(7)	

Examination Outline Cross-Reference	Level	RO
209001 LPCS	**Tier #**	2
	Group #	1
Knowledge of the physical connections an/or cause-effect relationships between low pressure core spray system and the following:	**K/A #**	209001 K1.02
	Rating	3.4
K1.02: Torus/suppression pool		

Question 30

The LPCS SOI Precautions/Limitations specify a suppression pool level below which the LPCS Pump should not be operated (**except in an emergency**) in order to ensure proper NPSH for the pump.

What is that specified level?

A. 10.5 feet

B. 14.25 feet

C. 14.5 feet

D. 18.34 feet

Answer: C

Explanation:
Answer is correct per the LPCS SOI (04-1-01-E21).

A is wrong. Per EP-2 (RPV Control), this is the lowest SP level at which an emergency depressurization may be performed via the ADS/SRVs; it is plausible for this reason.

B is wrong. Per the EP Technical Bases (02-S-01-40), Attachment III, page 9 of 11, CAUTION #2 discussion, this is the level below which SP temperature elements will be exposed; it is plausible for this reason.

D is wrong. This is the EP-3 (Containment Control) entry for SP low level and is plausible for this reason.

Technical References:
LPCS SOI (04-1-01-E21).

References to be provided to applicants during exam:
None

Learning Objective:

Question Source:	Bank #	
(note changes; attach parent)	Modified Bank #	315
	New	
Question History:	Last NRC Exam	2011
Question Cognitive Level:	Memory/Fundamental	X
	Comprehensive/Analysis	
10CFR Part 55 Content:	55.41(b)(10)	

Examination Outline Cross-Reference	Level	RO
209002 HPCS	**Tier #**	2
	Group #	1
Ability to monitor automatic operations of the high pressure core spray system (HPCS) including:	**K/A #**	209002 A3.03
	Rating	3.6
A3.03: System pressure: BWR-5,6		

Question 31

High Pressure Core Spray (HPCS) is being started for its quarterly surveillance test.

When the HPCS Pump is started, HPCS MIN FLO TO SUPP POOL valve E22-F012 would be expected to automatically open if:

A. HPCS pump breaker is closed and system flow is 1000 gpm.

B. HPCS pump breaker is closed and discharge pressure is 135 psig.

C. System flow is 1000 gpm and E22-F012 is closed.

D. System flow is 1000 gpm and discharge pressure is 135 psig.

Answer: D

Explanation:
All answers are plausible because they are common combinations of parameters used in minimum flow circuits for emergency injection systems. E22-F012 opens if discharge pressure is above 130 psig and flow is below 1206 gpm, as stated in the designated answer. RHR min flow valves look at breaker position and have setpoints of 1154 gpm. RCIC min flow valve looks for 125 psig discharge pressure.

Technical References:
17-S-06-5 Att. II p20
04-1-01-E22-1 steps 5.2.2g(3) and 5.2.2 j

References to be provided to applicants during exam:
None

Learning Objective: GLP-OPS-E2201 Obj 9.5

Question Source:	Bank #	906
(note changes; attach parent)	Modified Bank #	
	New	
Question History:	Last NRC Exam	2007

Question Cognitive Level:	Memory/Fundamental	X
	Comprehensive/Analysis	
10CFR Part 55 Content:	55.41(b)(7)	

Examination Outline Cross-Reference	Level	RO
211000 SLC	**Tier #**	2
	Group #	1
Knowledge of the effect that a loss or malfunction of the following will have on the standby liquid control system:	**K/A #**	211000 K6.03
	Rating	3.2
K6.03: A.C. power		

Question 32

The plant is at rated power.

06-OP-1C41-Q-0001, Standby Liquid Control Functional Test, is being performed with SLC A pump running, circulating the SLC Test Tank.

A Loss of Offsite Power and ATWS occurs.

Without operator action, what is the status of SLC?

	Both Pumps Powered	Tank aligned upon initiation
A.	Yes	Test Tank
B.	Yes	Storage Tank
C.	No	Test Tank
D.	No	Storage Tank

Answer: A

Explanation:
A. SLC A and B pumps are powered from 15 and 16 Bus MCC's. Power is automatically restored via Emergency Diesel Generators. Pump suction valves F001A and B are interlocked with the test tank outlet valve F031 such that, if F031 is not fully closed, the pump suction valve will not open automatically on a pump start signal.
B. SLC A and B pumps are powered from 15 and 16 Bus MCC's. Plausible if applicant recalls storage tank automatically opens upon initiation and test tank closes.
C. Plausible if applicant recalls pumps to be BOP powered. Pump suction valves F001A and B are interlocked with the test tank outlet valve F031 such that, if F031 is not fully closed, the pump suction valve will not open automatically on a pump start signal.
D. Plausible if applicant recalls pumps to be BOP powered. Plausible if applicant recalls storage tank automatically opens upon initiation and test tank closes.

Technical References: GLP-OPS-C4100		
References to be provided to applicants during exam: **None**		
Learning Objective: GLP-OPS-C4100, Obj 10		
Question Source:	Bank #	
(note changes; attach parent)	Modified Bank #	
	New	X
Question History:	Last NRC Exam	N/A
Question Cognitive Level:	Memory/Fundamental	
	Comprehensive/Analysis	X
10CFR Part 55 Content:	55.41(b)(6)	

Examination Outline Cross-Reference	Level	RO
212000 RPS	**Tier #**	2
	Group #	1
Knowledge of the operational implications of the following concepts as they apply to reactor protection system:	**K/A #**	212000 K5.02
	Rating	3.3
K5.02: Specific logic arrangements		

Question 33

The plant is operating at 45% power.

An RPS Trip System 'A' half-scram is sealed in due to an I&C surveillance.

Due to simultaneous faulty sensor inputs, RPS trip logics see Turbine Stop Valves (TSVs) 'A' and 'C' go closed (The TSVs did <u>not</u> <u>actually</u> close).

Which of the following describes the operational implications?

	Tripped RPS Channel(s)	Resulting Scram Signal
A.	A ONLY	Division 1 Half Scram
B.	A & B ONLY	Full Scram
C.	A & C ONLY	Division 1 Half Scram
D.	A & D ONLY	Full Scram

Answer: D

Explanation:
See GFIG-OPS-C7100, TSV Scram Logic Simplified. TSVs 'A' and 'C' will trip RPS Channel 'D' logic, producing a ½ scram on RPS Trip System 'B'. With RPS Trip System 'A' already tripped for the I&C surveillance, and with power >40% (enabling the TSV Closure Scram logic), a full scram results; this requires the ONEP scram actions and EP-2 entry as a result of hitting +11.4" water level on the resulting shrink, post-scram.

A is plausible if A & C TSVs cause RPS channel A to trip. Correct scram signal based on tripped channels.

B is plausible if A & C TSVs cause RPS channel B to trip. Correct scram signal based on tripped channels.

C is plausible if A & C TSVs cause RPS channel C to trip. Correct scram signal based on tripped channels.

Validation Three people selected C (half scram)		
Technical References: GLP-OPS-C7100		
References to be provided to applicants during exam: **None**		
Learning Objective:		
Question Source:	Bank #	
(note changes; attach parent)	Modified Bank #	970
	New	
Question History:	Last NRC Exam	N/A
Question Cognitive Level:	Memory/Fundamental	
	Comprehensive/Analysis	X
10CFR Part 55 Content:	55.41(b)(6)	

Examination Outline Cross-Reference	Level	RO
215003 IRM	Tier #	2
	Group #	1
For IRM system:	K/A #	215003: G2.1.32
	Rating	3.8
G2.1.32: Ability to explain and apply system limits and precautions.		

Question 34

According to 04-1-01-C51-1, Neutron Monitoring, when driving IRM detectors for maintenance, troubleshooting or surveillance activities, drive only one detector or one division of detectors at a time.

What is the basis for this?

A. Reduce the potential for a full scram.

B. Reduce the possibility of detector cable entanglement.

C. Avoid potential overload of the detector motor power monitors.

D. Ensure Tech Spec operability requirements for IRMs are maintained during the activity.

Answer: A

Explanation:
A. P&L 3.7 states potential for converter failure and resulting half scram exists when driving IRMs. One division should be driven at a time in case a half scram results from the division being driven. This is to avoid simultaneous half scrams in both RPS divisions.
B. Plausible because there are several detector cables located undervessel with limited space.
C. Plausible if the electrical circuit had power limitations within the capabilities of just one drive motor.
D. Plausible if while moving the IRM detectors they were declared Inoperable per tech specs.

Validation
One person selected C

Technical References:
04-1-01-C51-1, Neutron Monitoring

References to be provided to applicants during exam:
None

Learning Objective: GLP-OPS-C5102, Obj 12

Question Source:	Bank #	GLP-OPS-08183
(note changes; attach parent)	Modified Bank #	
	New	
Question History:	Last NRC Exam	N/A
Question Cognitive Level:	Memory/Fundamental	X
	Comprehensive/Analysis	
10CFR Part 55 Content:	55.41(b)(10)	

Examination Outline Cross-Reference	Level	RO
215004 Source Range Monitor	**Tier #**	2
	Group #	1
Knowledge of the physical connections an/or cause-effect relationships between source range monitor (SRM) system and the following:	**K/A #**	215004: K1.06
	Rating	3.4
K1.06: Reactor vessel		

Question 35

During a reactor startup SRM detectors are:

A. maintained in the fixed location in core for the life of the core.

B. maintained in the fixed location in core until SRM/APRM overlaps are completed.

C. withdrawn from the core maintaining 10^2 to 10^5 cps.

D. withdrawn from the core when any single IRM is on range 1.

Answer: C

Explanation:
A. Plausible because this describes APRM operation.
B. Plausible because this describes IRM operation.
C. During a reactor startup, SRM detectors are gradually withdrawn from the core. This withdrawal causes the period meter to move in the negative direction.
D. Plausible because SRMs are permitted to be withdrawn when both of the IRMs associated with the SRM are on range 3 or above..

Validation
Three people selected D. gradually withdrawn from the core maintaining a constant indicated period.

Technical References:
03-1-01-1, IOI-1 Cold Shutdown to Generator Carrying Minimum Load
GLP-OPS-C5101

References to be provided to applicants during exam:
None

Learning Objective: GLP-OPS-C5101 Obj 4

Question Source:	Bank #	
(note changes; attach parent)	Modified Bank #	
	New	X
Question History:	Last NRC Exam	N/A
Question Cognitive Level:	Memory/Fundamental	X

	Comprehensive/Analysis	
10CFR Part 55 Content:	55.41(b)(6)	

Examination Outline Cross-Reference	Level	RO
215004 Source Range Monitor	**Tier #**	2
Ability to monitor automatic operations of the source range monitor system including:	**Group #**	1
	K/A #	215004: A3.04
	Rating	3.6
A3.04: Control rod block status		

Question 36

A reactor startup is in progress following a mid-cycle scram from rated power.

SRM B fails full upscale.

How does SRM Channel 'B' respond with respect to RC&IS and RPS?

A. Generates a rod block, only.

B. Generates a rod block and causes a full scram.

C. Causes a full scram, only.

D. Does not generate a rod block and does not cause a full scram.

Answer: A

Explanation:
A. Stem conditions defining this reactor startup as following a mid-cycle scram ensures there is no doubt about the fact that all RPS shorting links are in fact installed. As such, when this trip de-energizes (i.e., its "normal" fail-safe mode of operation, which the Applicant is expected to recognize), the trip unit generates an "upscale" flux trip signal (i.e., above the 2x10E5 cps scram setpoint). However, with the RPS shorting links installed (an RPS system configuration), no full scram occurs. However, the rod block setpoint is at 1x10E5 cps; that setpoint has been exceeded.
B. Plausible if the shorting links were removed.
C. Plausible if the shorting links were removed.
D. Plausible if the rod block setpoint was higher.

Technical References:
GLP-OPS-C5101, SRM lesson plan
GFIG-OPS-C5101

References to be provided to applicants during exam:
None

Learning Objective: GLP-OPS-C5101, Objective 3.10

Question Source:	Bank #	316
(note changes; attach parent)	Modified Bank #	

	New	
Question History:	Last NRC Exam	2011
Question Cognitive Level:	Memory/Fundamental	
	Comprehensive/Analysis	X
10CFR Part 55 Content:	55.41(b)(6)	

Examination Outline Cross-Reference	Level	RO
215005 APRM / LPRM	**Tier #**	2
Ability to predict and/or monitor changes in parameters associated with operating the average power range monitor/local power range monitor system:	**Group #**	1
	K/A #	215005: A1.06
	Rating	3.3
A1.05: Lights and alarms		

Question 37

Plant is operating at 100% power.

'B' Main Feed Pump trips.

The following annunciators are in alarm:
APRM CH 1 UPSC TRIP/OPRM TRIP/INOP
APRM CH 3 UPSC TRIP/OPRM TRIP/INOP

The following computer points are in alarm:
C51NC065 APRM 1 OPRM TRIP
C51NC067 APRM 3 OPRM TRIP

What operator action is required FIRST based on these indications?

A. Place the reactor mode switch in the shutdown position.

B. Verify half scram indications. Secure maintenance to prevent full scram.

C. Enter Tech Spec 3.3.1.1, Reactor Protection System (RPS) Instrumentation for two channels of APRMS INOP.

D. Verify channels 2 and 4 OPRMs are operable.

Answer: A
Explanation: A. When the B MFPT trips, the Recirc FCVs will runback and OPRM Enabled Region will be entered. If THI is detected then immediately place the reactor mode switch in the shutdown position. THI is detected by the two alarms and corresponding computer points in alarm. B. Plausible if applicant recalls RPS logic to Channels A and C will cause half scram on RPS A. C. Plausible because Table 3.3.1.1, 3 APRM channels must be operable. D. Plausible because step 3.4.1 Reduction Recirc ONEP, states to Verify that at least 3 OPRM

channels are not bypassed. Validation One person selected B.		
Technical References: 05-1-02-III-3, Reduction in Recirculation System Flow Rate ONEP TS 3.3.1.1		
References to be provided to applicants during exam: **None**		
Learning Objective:		
Question Source:	Bank #	
(note changes; attach parent)	Modified Bank #	
	New	X
Question History:	Last NRC Exam	N/A
Question Cognitive Level:	Memory/Fundamental	
	Comprehensive/Analysis	X
10CFR Part 55 Content:	55.41(b)(6)	

Examination Outline Cross-Reference	Level	RO
217000 RCIC **Knowledge of the effect that a loss or malfunction of the reactor core isolation cooling system (RCIC) will have on the following:** **K3.03: Decay heat removal**	**Tier #**	2
	Group #	1
	K/A #	217000: K3.03
	Rating	3.5

Question 38

(1) What are the MINIMUM ESF busses lost during a station blackout?

(2) Which of the following system malfunctions during a station blackout will have the biggest impact on the plant's ability for decay heat removal?

	(1)	(2)
A.	ALL	RCIC
B.	15AA & 16AB ONLY	RCIC
C.	ALL	LPCS
D.	15AA & 16AB ONLY	LPCS

Answer: B
Explanation: A. Plausible if student confuses station blackout to include ALL ECCS buses lost. RCIC is the only system on the list that does not require AC power to operate. B. Per GGNS UFSAR, 5.4.6.1.3, The RCIC system could be operated if all AC power is lost. Per 05-1-02-I-4, Los of AC Power ONEP, Section 3.2 Loss of Div 1 AND Div 2 ESF Buses is a Station Blackout. This means 15AA and 16AB are not able to be re-energized. RCIC is the only system on this list that does not require AC power to operate. C. Plausible if student confuses station blackout to include ALL ECCS buses lost. LPCS is plausible because by definition of station blackout 17AC bus may still be available. HPCS is powered from 17AC and if student confuses LPCS with HPCS this answer may be selected. D. Per 05-1-02-I-4, Los of AC Power ONEP, Section 3.2 Loss of Div 1 AND Div 2 ESF Buses is a Station Blackout. This means 15AA and 16AB are not able to be re-energized. . LPCS is plausible because by definition of station blackout 17AC bus may still be available. HPCS is powered from 17AC and if student confuses LPCS with HPCS this answer may be selected. Validation One person selected A LPCS. This was previous revision of question that asked part 2 only.
Technical References: GGNS UFSAR, 5.4.6.1.3

05-1-02-I-4, Los of AC Power ONEP		
References to be provided to applicants during exam: None		
Learning Objective:		
Question Source:	Bank #	
(note changes; attach parent)	Modified Bank #	
	New	X
Question History:	Last NRC Exam	N/A
Question Cognitive Level:	Memory/Fundamental	
	Comprehensive/Analysis	X
10CFR Part 55 Content:	55.41(b)(8)	

Examination Outline Cross-Reference	Level	RO
217000 RCIC	**Tier #**	2
Knowledge of the operational implications of the following concepts as they apply to reactor core isolation cooling system (RCIC):	**Group #**	1
	K/A #	217000: K5.02
	Rating	3.1
K5.02: Flow indication		

Question 39

The plant has scrammed due to a loss of feedwater.

Control Room evacuation is required due to security threat.

HPCS is not available.

The Rover is directed to establish reactor water level control with RCIC at Remote Shutdown Panel P150.

Which of the following describes the Rover's operation of RCIC at P150?

A. The only way to prevent over-fill as RCIC makes up to the RPV is by the Rover closing E51-F045 RCIC Turbine Steam Supply at the panel.

B. The only way to determine RCIC flow at the panel is by the Rover nulling out the flow controller and reading the flow off the controller vertical tape.

C. The Rover will have to manually swap the RCIC suction over to the suppression pool if it becomes necessary.

D. The control room will have to keep the Rover aware of RCIC turbine speed; if a trip is necessary because of inadequate speed, closing the Trip/Throttle Valve is the only method available.

Answer: B
Explanation: P150 has no dedicated RCIC flow indicator (such as exists in the control room at P601). Only by nulling out the P150 RCIC flow controller can the Rover then read flow off the controller vertical tape. A & C are wrong. These two choices suggest facts that would be true <u>only if</u> operators had evacuated the control room due to a control room fire or security threat <u>and</u> Attachment III of the Remote Shutdown ONEP had already been performed (see Remote Shutdown ONEP, section 3.5.1 and Attachment V, page 1 of 2 (CAUTION). The CAUTION shows that when Att. III is performed RCIC automatic functions are disabled, including the Level 8 turbine shutdown (i.e., auto-closure of F045 and auto-swap of pump suction to supp pool).

D is wrong. Although it is true that the only way to trip RCIC at P150 is by closing the T/T Valve (i.e., the panel has no Trip pushbutton), there is in fact Turbine Speed indication at the panel. There is no need for the control room to keep the Rover informed of speed.

Validation
One person selected A

Technical References:
05-1-02-II-1, Remote Shutdown Panel ONEP

References to be provided to applicants during exam:
None

Learning Objective: GLP-OPS-C6100, OBJ. 6

Question Source:	Bank #	476
(note changes; attach parent)	Modified Bank #	
	New	
Question History:	Last NRC Exam	2010
Question Cognitive Level:	Memory/Fundamental	
	Comprehensive/Analysis	X
10CFR Part 55 Content:	55.41(b)(7)	

Examination Outline Cross-Reference	Level	RO
218000 ADS	**Tier #**	2
Knowledge of electrical power supplies to the following:	**Group #**	1
	K/A #	218000: K2.01
	Rating	3.1
K2.01: ADS logic		

Question 40

The Div 1 ADS logic is powered from…

A. RPS Bus 'A'

B. Inverter 1Y87

C. Distribution panel 1DA1

D. Power panel 15P61

Answer: C

Explanation:
A. RPS Bus 'A' supplies 120 VAC, not 125 DC. Plausible to the Applicant who cannot recall that ADS logic is DC powered.
B. This is the Div 1 inverter which supplies 120 VAC, not 125 DC. Plausible for the same reason as choice 'A'.
C. ADS logic is DC powered from the Div 1 DC subsystem (11DA) via its distribution panel 1DA1, breaker 72-11A23 (see E-1161-004 and -005, also E-1023).
D. This is one of the 120 VAC power panels fed from the Div 1 vital bus 15AA via an MCC. Plausible for the same reason as choice 'A'.

Validation
One person selected D.

Technical References:
E-1023, One Line for 125 VDC Buses 11DA, 11DB & 11DC
E-1161-004, ADS Power Distribution
E-1161-005, ADS Relay Logics
GLP-OPS-E2202, ADS LESSON PLAN

References to be provided to applicants during exam:
None

Learning Objective: GLP-OPS-E2202 Obj 19.3

Question Source:	Bank #	3
(note changes; attach parent)	Modified Bank #	

	New	
Question History:	Last NRC Exam	N/A
Question Cognitive Level:	Memory/Fundamental	X
	Comprehensive/Analysis	
10CFR Part 55 Content:	55.41(b)(7)	

Examination Outline Cross-Reference	Level	RO
223002 PCIS/Nuclear Steam Supply Shutoff	Tier #	2
Ability to manually operate and/or monitor in the control room:	Group #	1
	K/A #	223002 A4.01
	Rating	3.6
A4.01: Valve closures		

Question 41

Depressing the CTMT-DRWL ISOL DIV 1(2) MAN INIT isolation pushbuttons on P870 will isolate the…

A. RHR to Radwaste Group 2 valves.

B. RWCU Group 8 valves.

C. Containment Cooling Group 7 valves.

D. Reactor Water Sample Line Group 10 valves.

Answer: C

Explanation:
Only the Group 7 valves isolate when these pushbuttons are depressed. The list of the valves that close when these pushbuttons are depressed is found in the M71 system SOI, page 6, Section 5.1.2. Compare this list to the Containment Cooling Group 7 list found in the "Automatic Isolations" ONEP (05-1-02-III-5) to validate that only Group 7 valves will close.

The plausibility of the Distracters is that each of these groups of NSSSS isolations contains penetrations/valves within the Drywell and/or Containment. The name plate description for the Group 7 isolation is not detailed enough for someone who has not mastered the knowledge of the purpose/function of this isolation to distinguish between these isolation groups.

Validation
One person selected B.

Technical References:
CTMT and Drywell Instrumentation and Control System SOI, 04-1-01-M71-1
Automatic Isolations ONEP, 05-1-02-III-5

References to be provided to applicants during exam:

Learning Objective: GLP-OPS-M7101 Obj 8.2

Question Source:	Bank #	94
(note changes; attach parent)	Modified Bank #	
	New	

Question History:	Last NRC Exam	2012
Question Cognitive Level:	Memory/Fundamental	X
	Comprehensive/Analysis	
10CFR Part 55 Content:	55.41(b)(7)	

Examination Outline Cross-Reference	Level	RO
239002 SRVs **Knowledge of the effect that a loss or malfunction of the following will have on the relief/safety valves:** **K6.02: Air (Nitrogen) supply: Plant-Specific**	**Tier #**	2
	Group #	1
	K/A #	239002 K6.02
	Rating	3.4

Question 42

The plant has been in a Station Blackout for three hours.

All Safety Relief Valve (SRV) accumulator air pressures are zero psig.

What relief/safety mode is available?

A. Normal relief mode only.

B. Safety mode only.

C. Low-Low Set Relief mode only.

D. ADS Relief mode only.

Answer: B

Explanation:
In safety mode, SRV operation is as described in answer B**.** No air pressure or DC is required. DC power is available.
A is plausible since the Normal Relief logic would actuate and the SRV solenoids would energize, but with no air pressure for motive force, the SRV would not open.
C is plausible since the Low-Low Set Relief logic would actuate and the SRV solenoids would energize, but with no air pressure for motive force, the SRV would not open.
D is plausible since the ADS Relief logic would actuate and the SRV solenoids would energize, but with no air pressure for motive force, the SRV would not open.

Technical References:
GLP-OPS-E2202

References to be provided to applicants during exam:
None

Learning Objective: GLP-OPS-E2202 Obj. 7

Question Source:	Bank #	
(note changes; attach parent)	Modified Bank #	
	New	X

Question History:	Last NRC Exam	N/A
Question Cognitive Level:	Memory/Fundamental	X
	Comprehensive/Analysis	
10CFR Part 55 Content:	55.41(b)(3)	

Examination Outline Cross-Reference	Level	RO
239002 SRVs **Ability to (a) predict the impacts of the following on the relief/safety valves; and (b) based on those predictions, use procedures to correct, control, or mitigate the consequences of those abnormal conditions or operations:** **A2.04: ADS actuation**	**Tier #**	2
	Group #	1
	K/A #	239002: A2.04
	Rating	4.1

Question 43

The plant is operating at 100% power.

An inadvertent Division 1ECCS initiation occurs due to failed downscale level transmitter.

Ten minutes later, a FW transient occurs and causes NR RWL to drop to 10 inches.

RWL is restored >12 inches 2 minutes after transient.

With no operator action, what is the status of ADS two minutes after the FW transient and what is the minimum action required to mitigate the consequences?

A. ADS actuation has occurred.
The Division 1 ADS logic must be reset and place the respective ADS MANUAL INHIBIT keylock switch in the INHIBIT position.

B. ADS actuation has occurred.
The Division 1 ADS logic must be reset.

C. ADS actuation has not completed time delays.
The Division 1 ADS logic must be reset and place the respective ADS MANUAL INHIBIT keylock switch in the INHIBIT position.

D. ADS actuation has not completed time delays.
The Division 1 ADS logic must be reset.

Answer: B
Explanation: A. Actuation has occurred. Actuation requirements met are <-150.3 inches for 9.2 minutes, <+11.4

inches level confirmation, ADS in NORM, 105 sec TDE, and Division 1 ECCS pump running to raise discharge pressure above setpoint. Per GLP-OPS-E2202, If desired to close the ADS valves with all required signals present and without having to repeatedly reset the 105 second timer, depress the reset pushbuttons and place the respective ADS MANUAL INHIBIT keylock switches in the INHIBIT position. Both of these actions are not required to mitigate the spurious actuation.

B. Actuation requirements are met. Per B21 SOI to reset an ADS initiation, Depress both A and B logic reset pushbuttons on P601. Check the valves closed and logic resets.

C. Student may have confused the timer sequence and believed the ADS actuation sequence has not completed its time delays. The actions will mitigate actuation but are not the minimum actions.

D. Student may have confused the timer sequence and believed the ADS actuation sequence has not completed its time delays. This is the minimum action required to minimize the actuation.

Validation
One person selected D.

Technical References:
GLP-OPS-E2202
GFIG-OPS-E2202
04-1-01-B21-1, Section 5.2, Resetting an ADS initiation

References to be provided to applicants during exam:
None.

Learning Objective:

Question Source:	Bank #	
(note changes; attach parent)	Modified Bank #	
	New	X
Question History:	Last NRC Exam	N/A
Question Cognitive Level:	Memory/Fundamental	
	Comprehensive/Analysis	X
10CFR Part 55 Content:	55.41(b)(8)	

Examination Outline Cross-Reference	Level	RO
259002 Reactor Water Level Control	**Tier #**	2
Ability to predict and/or monitor changes in parameters associated with operating the reactor water level control system controls including:	**Group #**	1
	K/A #	259002 A1.02
	Rating	3.6
A1.02: Reactor feedwater flow		

Question 44

The reactor is operating at rated power.

The C34 Feedwater Flow transmitter fails full upscale (hard-failure).

What effects will directly result from this condition?

A. Switch to MANUAL level control

B. Disable three-element control

C. An "estimated" feedwater flow signal replaces the hard-failure and no change in three-element control is experienced.

D. The feedwater system will automatically lower feedwater flow.

Answer: B

Explanation:
"Hard-failures" of feedwater flow signals are responded to by immediately de-selecting and disabling three-element control.

A. Plausible because if all four level channels hard fail the level control stations will automatically swap to MANUAL.
B. Correct.
C. Plausible because an estimated feedwater flow can replace the normal total feedwater flow signal and three-element control can be re-selected and returned to service.
D. Plausible if the upscale feed flow signal is sensed and used as a good input to the level control system. High feed flow the system would attempt to reduce feed flow to anticipate a rise in level due to feed flow steam flow mismatch.

Validation
One person selected C.

Technical References:
GLP-OPS-C3400, DFCS lesson

References to be provided to applicants during exam:
None

Learning Objective: GLP-OPS-C3400 Obj 3		
Question Source:	Bank #	
(note changes; attach parent)	Modified Bank #	
	New	X
Question History:	Last NRC Exam	N/A
Question Cognitive Level:	Memory/Fundamental	X
	Comprehensive/Analysis	
10CFR Part 55 Content:	55.41(b)(7)	

Examination Outline Cross-Reference	Level	RO
259002 Reactor Water Level Control	Tier #	2
Ability to manually operate and/or monitor in the control room:	Group #	1
	K/A #	259002 A4.11
	Rating	3.5
A4.11: High level lockout reset controls: Plant-Specific		

Question 45

Post-scram level control problems have resulted in a Level 9 trip of both RFPTs.

Currently at P680:

- RFPT A TRIP annunciator is sealed-in
- RX LVL 40”/32” HI/LO annunciator is sealed-in
- RFPT/MN TURB LVL 9 TRIP annunciator is sealed-in

To reset the trip on RFPT ‘A’ the operator must wait for the…

A. RFPT/MN TURB LVL 9 TRIP annunciator to clear, then depress the RFPT A TRIP RESET pushbutton.

B. RX LVL 40”/32” HI/LO annunciator to clear, then depress the RFPT A TRIP RESET pushbutton.

C. RX LVL 40”/32” HI/LO annunciator to clear, then depress the LEVEL A, B, C SELECTED/DISABLED pushbuttons.

D. RFPT/MN TURB LVL 9 TRIP annunciator to clear, then depress the LEVEL A, B, C SELECTED/DISABLED pushbuttons.

Answer: A

Explanation:
The RFPT/MN TURB LVL 9 TRIP annunciator clearing is indicative of the Level 9 trip signal clearing, at which point the RFPT trip can be reset as soon as the operator depresses the RFPT A TRIP RESET pushbutton.

B is wrong because it suggests that the operator must “Wait” until water level lowers to the point of clearing the RX LVL 40”/32” HI/LO annunciator before being able to reset the RFPT trip by depressing the RFPT A TRIP RESET pushbutton. This is not true.

C & D are wrong because the Level A, B, C, Selected/Disabled pushbuttons are used to manually select the level instruments used by the Digital Feed Control System.

Technical References:

ARIs P680-2A-A2, 3A-A3, and 4A2-D1 GLP-OPS-N2100, page 21 04-1-01-N21-1		
References to be provided to applicants during exam: **None**		
Learning Objective: GLP-OPS-N2100, OBJ. 13.0		
Question Source:	Bank #	490
(note changes; attach parent)	Modified Bank #	
	New	
Question History:	Last NRC Exam	2010
Question Cognitive Level:	Memory/Fundamental	
	Comprehensive/Analysis	X
10CFR Part 55 Content:	55.41(b)(7)	

Examination Outline Cross-Reference	Level	RO
261000 SGTS	**Tier #**	2
Knowledge of the effect that a loss or malfunction of the standby gas treatment system will have on the following:	**Group #**	1
	K/A #	261000 K3.01
	Rating	3.3
K3.01: Secondary containment and environment differential pressure		

Question 46

The plant is operating at rated power when both RFPTs trip.

Both SGTS trains auto-initiate.

Reactor water level is being restored by HPCS and RCIC.

Operators place SGTS 'A' in STANDBY with its Mode Select Switch at P870 and secures SGTS 'A'.

Enclosure Building negative pressure degrades to _____ setpoint which will auto-start SGTS 'A'?

A. -0.88" w.c

B. -0.75" w.c

C. -0.25" w.c

D. -0.2" w.c.

Answer: D

Explanation:
When a SBGT system is placed in standby all initiation signals from reactor water level, hi drywell pressure and radiation are bypassed. The standby fan will only start on low Enclosure building recirc fan flow <8500scfm, low exhaust filter train flow <1250 scfm, or enclosure building low negative pressure -0.2" wc.

A. Plausible because one of the requirements to open the Post-LOCA vacuum relief valves is Drywell pressure is ≤-0.88 psid less than Containment pressure. (GLP-OPS-E6100)
B. Plausible because upon initiation SBGT system the electro-hydraulically actuated flow control vanes begin to modulate if enclosure Building pressure is drawn down to -0.75" wc. (GLP-OPS-T4800)
C. Plausible because the SBGT system initial draw down is to -0.25" wc. (GLP-OPS-T4800)
D. Correct

Technical References:

GLP-OPS-T4800 GLP-OPS-E6100		
References to be provided to applicants during exam: **None**		
Learning Objective: GLP-OPS-T4800, Objective 8.6 & 8.7		
Question Source:	Bank #	
(note changes; attach parent)	Modified Bank #	
	New	X
Question History:	Last NRC Exam	N/A
Question Cognitive Level:	Memory/Fundamental	X
	Comprehensive/Analysis	
10CFR Part 55 Content:	55.41(b)(7)	

Examination Outline Cross-Reference	Level	RO
262001 AC Electrical Distribution	**Tier #**	2
	Group #	1
For AC electrical distribution system:	**K/A #**	
	Rating	3.9
G2.1.19: Ability to use plant computer to evaluate system or component status.		

Question 47

While monitoring N19 Condensate System on PDS, an electrical malfunction occurs.

Based on the provided PDS indications, what was the electrical malfunction?

A. Loss of ESF Transformer 21

B. Loss of ESF Transformer 11

C. Loss of Service Transformer 21

D. Loss of Service Transformer 11

Answer: D		
Explanation: Based on the indications Condensate Pump B and C and Condensate Booster Pump C are running. These are powered from ST21 via 14AE. The loss of the other pumps indicates there was a loss of ST11 via 13AD. A. Plausible if pumps lost were Division 2 ESF powered. B. Plausible if pumps lost were Division 1 ESF powered. C. Plausible if pumps lost were BOP powered from 14AE.		
Technical References: GLP-OPS-N1900 R2700 Figure 6		
References to be provided to applicants during exam: **PDS Display Printout**		
Learning Objective: GLP-OPS-N1900, Obj 10		
Question Source:	Bank #	
(note changes; attach parent)	Modified Bank #	
	New	X
Question History:	Last NRC Exam	N/A

Question Cognitive Level:	Memory/Fundamental	
	Comprehensive/Analysis	X
10CFR Part 55 Content:	55.41(b)(7)	

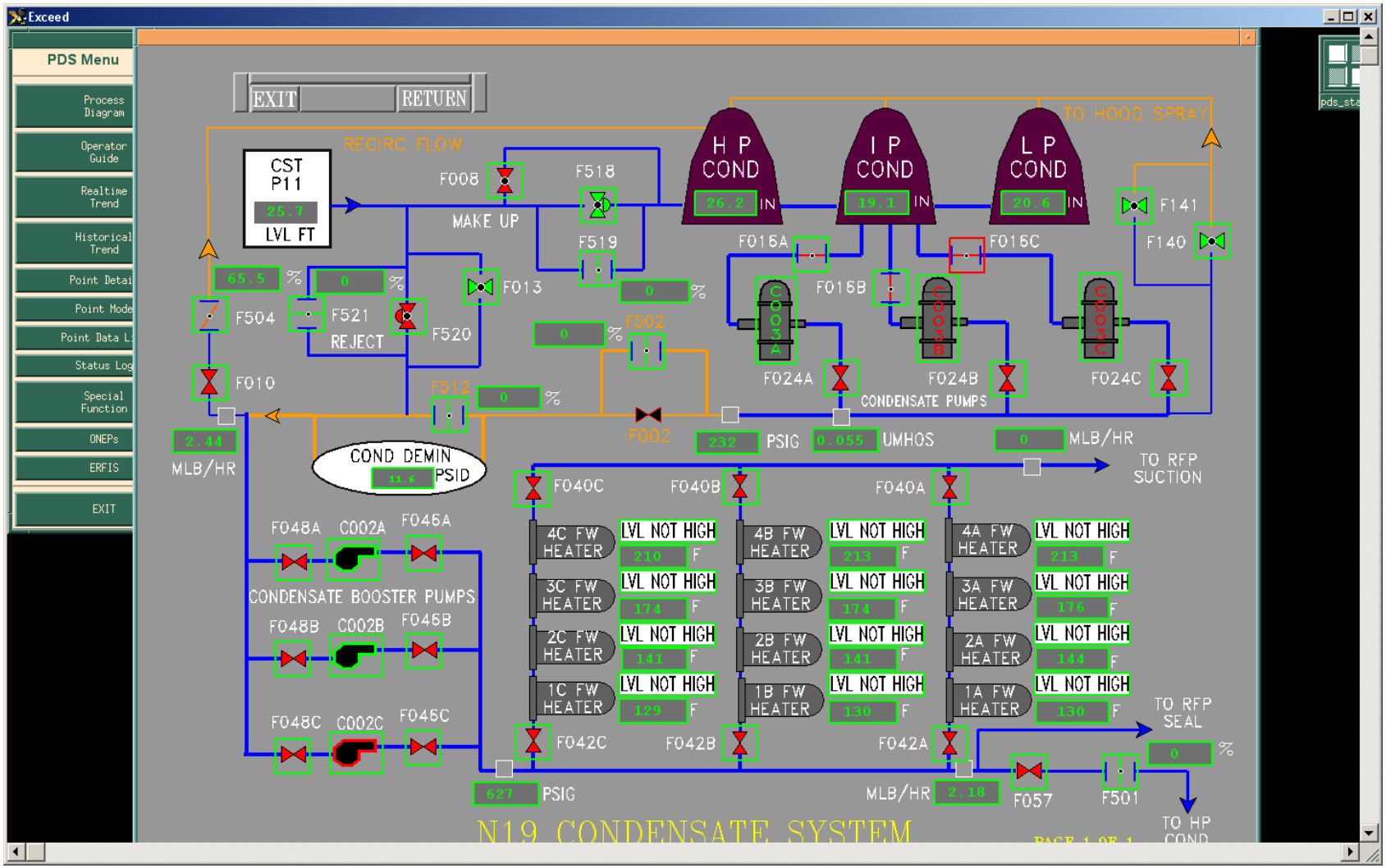
Exceed
PDS Menu
Process Diagram
Operator Guide
Realtime Trend
Historical Trend
Point Detail
Point Mode
Point Data L
Status Log
Special Function
ONEPs
ERFIS
EXIT
EXIT
RETURN
RECIRC FLOW
CST P11
25.7
LVL FT
F008
MAKE UP
F518
F519
H P COND
26.2
IN
I P COND
19.1
IN
L P COND
20.6
IN
TO HOOD SPRAY
F141
F140
F016A
F016B
F016C
65.5
%
0
%
F504
F521
REJECT
F520
F013
0
%
F502
0
%
F010
F512
0
%
F002
F024A
F024B
F024C
CONDENSATE PUMPS
2.44
MLB/HR
COND DEMIN
43.6
PSID
232
PSIG
0.055
UMHOS
0
MLB/HR
TO RFP SUCTION
F040C
F040B
F040A
F048A
C002A
F046A
CONDENSATE BOOSTER PUMPS
F048B
C002B
F046B
F048C
C002C
F046C
4C FW HEATER
LVL NOT HIGH
210
F
3C FW HEATER
LVL NOT HIGH
174
F
2C FW HEATER
LVL NOT HIGH
141
F
1C FW HEATER
LVL NOT HIGH
129
F
4B FW HEATER
LVL NOT HIGH
213
F
3B FW HEATER
LVL NOT HIGH
174
F
2B FW HEATER
LVL NOT HIGH
141
F
1B FW HEATER
LVL NOT HIGH
130
F
4A FW HEATER
LVL NOT HIGH
213
F
3A FW HEATER
LVL NOT HIGH
176
F
2A FW HEATER
LVL NOT HIGH
144
F
1A FW HEATER
LVL NOT HIGH
130
F
TO RFP SEAL
F042C
F042B
F042A
0
%
627
PSIG
MLB/HR
2.18
F057
F501
TO HP COND
N19 CONDENSATE SYSTEM

Examination Outline Cross-Reference	Level	RO
262002 UPS (AC/DC) **Ability to (a) predict the impacts of the following on the uninterruptable power supply (AC/DC); and (b) based on those predictions, use procedures to correct, control, or mitigate the consequences of those abnormal conditions or operations:** **A2.01: Under voltage**	**Tier #**	2
	Group #	1
	K/A #	262002: A2.01
	Rating	2.6

Question 48

Due to partial loss of AC power, the reason a UPS static switch will automatically transfer load from the inverter to the alternate source is exceeding the _____ setpoint.

Per 04-1-1-01-L62-1, Static Inverters SOI, what is the required action for manual restoration of an inverter to its normal lineup?

A. Under current
INVERTER TO LOAD pushbutton must be used.

B. Under current
MANUAL BYPASS SWITCH must be used.

C. Under voltage
INVERTER TO LOAD pushbutton must be used.

D. Under voltage
MANUAL BYPASS SWITCH must be used.

Answer: C
Explanation: The inverter has an Under Voltage, Under frequency and Over Current setting for auto-transfer of its load to the alternate power source. A. The student may confuse under voltage and OVER current setpoints for auto transfer. The under current setpoint will not cause an auto transfer. The L62 SOI states, Depress INVERTER TO LOAD pushbutton and the INVERTER TO LOAD status light should be illuminated and ALTERNATE SOURCE TO LOAD status light should be off. B. The student may confuse under voltage and OVER current setpoints for auto transfer. The under current setpoint will not cause an auto transfer. The L62 SOI states, the manual bypass switch is only required if the switch is in alternate source to load position. This example was an auto transfer, so the manual bypass switch should be in the normal position.

C. Under Voltage setpoint will cause auto transfer. The L62 SOI states, Depress INVERTER TO LOAD pushbutton and the INVERTER TO LOAD status light should be illuminated and ALTERNATE SOURCE TO LOAD status light should be off.

D. Under Voltage setpoint will cause auto transfer. The L62 SOI states, the manual bypass switch is only required if the switch is in alternate source to load position. This example was an auto transfer, so the manual bypass switch should be in the normal position.

Validation
One person selected A and one person selected D.

Technical References:
GLP-OPS-L62 Rev 13
04-1-01-L62-1, Static Inverters SOI, Section 5.3.2 b.

References to be provided to applicants during exam:
None

Learning Objective:
GLP-OPS-L62 3.2, 4.1, & 4.2

Question Source:	Bank #	
(note changes; attach parent)	Modified Bank #	
	New	X
Question History:	Last NRC Exam	N/A
Question Cognitive Level:	Memory/Fundamental	X
	Comprehensive/Analysis	
10CFR Part 55 Content:	55.41(b)(10)	

Examination Outline Cross-Reference	Level	RO
263000 DC Electrical Distribution	Tier #	2
	Group #	1
Knowledge of electrical power supplies to the following:	K/A #	263000 K2.01
	Rating	3.1
K2.01: Major D.C. loads		

Question 49

The plant is operating at rated conditions.

The following alarms are received:

- P680-9A-D11, GEN SEAL OIL TROUBLE
- P680-10A-C10, GEN H2 SEAL OIL PUMP C FAULT

Which of the following is the DC Electrical bus that was lost?

A. 11DB

B. 11DD

C. 11DE

D. 11DF

Answer: D		
Explanation: See 04-1-01-1-L11 Attachment 1F shows the power supply for the DC SEAL OIL PUMP C MOTOR. A, B, and C are plausible because they are other divisional DC power sources. Validation One person selected C		
Technical References: 04-1-01-L11-1, Attachment 1F, 125V DC BUS 11DF LOAD LIST		
References to be provided to applicants during exam:		
Learning Objective: GLP-OPS-L1100 Obj 6.2, 8.3		
Question Source:	Bank #	86

(note changes; attach parent)	Modified Bank #	
	New	
Question History:	Last NRC Exam	N/A
Question Cognitive Level:	Memory/Fundamental	
	Comprehensive/Analysis	X
10CFR Part 55 Content:	55.41(b)(7)	

Examination Outline Cross-Reference	Level	RO
264000 EDGs	Tier #	2
	Group #	1
Ability to monitor automatic operations of the emergency generators (diesel/jet) including:	K/A #	264000: A3.06
	Rating	3.1
A3.06: Cooling water system operation		

Question 50

Operators have manually initiated Division 1 ECCS logic from P601 with the LPCS/RHR A MAN INIT arm and depress pushbutton.

What is the status of the diesel generator and SSW A?

A. Division 1 diesel generator is running and NOT supplying power to 15AA.
SSW A is automatically aligned for RHR A component start.

B. Division 1 diesel generator is running and NOT supplying power to 15AA.
SSW A is aligned for a LOCA start.

C. Division 1 diesel generator is running and supplying power to 15AA.
SSW A is automatically aligned for RHR A component start.

D. Division 1 diesel generator is running and supplying power to 15AA.
SSW A is aligned for a LOCA start.

Answer: B

Explanation:
A. The RHR A manual initiate pushbuttons will simulate a division 1 ECCS LOCA signal. This will start the diesel generator automatically. There is no loss of power, so the diesel will not supply power to 15AA. When RHR A is manually started per SOI component by component a component start is possible; however, the pushbuttons generate a LOCA signal.

B. The RHR A manual initiate pushbuttons will simulate a division 1 ECCS LOCA signal. This will start the diesel generator automatically. There is no loss of power, so the diesel will not supply power to 15AA. The RHR manual initiate pushbuttons generate a LOCA signal; therefore, SSW automatically aligns for a LOCA start.

C. The RHR A manual initiate pushbuttons will simulate a division 1 ECCS LOCA signal. This will start the diesel generator automatically. The student may confuse this with a LOP/LOCA signal which will shed the bus and the diesel will automatically start and supply power to the bus. When RHR A is manually started per SOI component by component a component start is possible; however, the pushbuttons generate a LOCA signal.

D. The RHR A manual initiate pushbuttons will simulate a division 1 ECCS LOCA signal. This will

start the diesel generator automatically. The student may confuse this with a LOP/LOCA signal which will shed the bus and the diesel will automatically start and supply power to the bus. The RHR manual initiate pushbuttons generate a LOCA signal; therefore, SSW automatically aligns for a LOCA start.		
Technical References: GLP-OPS-P4100 GLP-OPS-E1200 GLP-OPS-P7500		
References to be provided to applicants during exam: **None**		
Learning Objective:		
Question Source:	Bank #	
(note changes; attach parent)	Modified Bank #	
	New	X
Question History:	Last NRC Exam	N/A
Question Cognitive Level:	Memory/Fundamental	
	Comprehensive/Analysis	X
10CFR Part 55 Content:	55.41(b)(7)	

Examination Outline Cross-Reference	Level	RO
300000 Instrument Air	**Tier #**	2
Knowledge of instrument air system design feature(s) and or interlocks which provide for the following:	**Group #**	1
	K/A #	300000 K4.02
	Rating	3.0
K4.02: Cross-over to other air systems		

Question 51

The INFI-90 Controller output for P53-PV-F503 (IA Pressure Reducing Station) has failed.

What describes the method of pressure control for the IA Pressure Reducing Station for this condition?

P53-PV-504 (IA Backup Pressure Regulator) will maintain Instrument Air pressure at ____(1)___ psig from ___(2)___.

	(1)	(2)
A.	100	service air system
B.	90	service air system.
C.	100	plant air compressors.
D.	90	plant air compressors.

Answer: C

Explanation:
If the INFI-90 Controller fails, the backup regulator PV-F504 will maintain pressure at 100 psig. Plant air compressors supply air to instrument air system

A. Plausible because the backup valve is set to maintain 100 psig. Service air system is plausible if student remembers simplified drawing because the service air pressure regulator is in parallel with the instrument air backup pressure regulator.

B. Plausible because the standby Plant Air Compressor will start if Service Air Pressure reaches it set point of 90 psig for 40 seconds. Service air system is plausible if student remembers simplified drawing because the service air pressure regulator is in parallel with the instrument air backup pressure regulator.

C. Correct

D. Plausible because the standby Plant Air Compressor will start if Service Air Pressure reaches it set point of 90 psig for 40 seconds. Plant air compressors do supply the normal and backup air supplies.

Technical References: **GLP-OPS-P5100** GFIG-OPS-P5100		
References to be provided to applicants during exam: **None**		
Learning Objective: GLP-OPS-P5100 Obj 18		
Question Source:	Bank #	
(note changes; attach parent)	Modified Bank #	120
	New	
Question History:	Last NRC Exam	N/A
Question Cognitive Level:	Memory/Fundamental	X
	Comprehensive/Analysis	
10CFR Part 55 Content:	55.41(b)(4)	

Examination Outline Cross-Reference	Level	RO
400000 Component Cooling Water	**Tier #**	2
	Group #	1
Knowledge of the physical connections and/or cause-effect relationships between CCWS and the following:	**K/A #**	400000: K1.02
	Rating	3.2
K1.02: Loads cooled by CCWS		

Question 52

CCW Temperature Control Valve failed closed.

Per the Subsequent Actions of the Loss of CCW ONEP, CCW flow to the FPCC Heat Exchangers has been isolated.

After 10 minutes, CCW system temperature has risen to Spent Fuel Pool temperature.

Per the ONEP, operators are re-establishing CCW flow to the FPCC Heat Exchangers.

After stable CCW flow is established through the FPCC Heat Exchangers, what should be the response of CCW system temperature?

A. Temperature rapidly turns and begins to lower.

B. Temperature rapidly levels off and stabilizes.

C. Rate of temperature rise increases while temperature continues to rise.

D. Rate of temperature rise decreases but temperature continues to rise.

Answer: D

Explanation:
Loss of CCW ONEP step 3.3 and its NOTE resulted from a GGNS Engineering Evaluation that shows how the Spent Fuel Pool water volume actually becomes a heat-sink (rather than a heat load) for the CCW system after CCW system temperature reaches pool temperature. At that time, the pool water volume dramatically reduces the rate of CCW system rise, although CCW system temperature does in fact continue to rise.

A. Plausible if same result expected as placing a heat exchanger with cooling water on service.
B. Plausible if same result expected as placing heat exchanger with large temperature difference.
C. Plausible if FPCC heat exchanger was providing large heat input into CCW.
D. Correct.

Technical References:
05-1-02-V-1, Loss of CCW ONEP

References to be provided to applicants during exam: **None**		
Learning Objective: GLP-OPS-ONEP, OBJ. 2.0		
Question Source:	Bank #	509
(note changes; attach parent)	Modified Bank #	
	New	
Question History:	Last NRC Exam	2010
Question Cognitive Level:	Memory/Fundamental	
	Comprehensive/Analysis	X
10CFR Part 55 Content:	55.41(b)(10)	

Examination Outline Cross-Reference	Level	RO
400000 Component Cooling Water	**Tier #**	2
	Group #	1
For the component cooling water system:	**K/A #**	400000 G2.4.11
	Rating	4.0
G2.4.11 Knowledge of abnormal condition procedures.		

Question 53

The plant is operating at rated conditions.

A transient occurs on the CCW Pumps.

Currently only one (1) CCW pump is running.

All subsequent actions from the Loss of CCW ONEP have been completed.

Which of the following describes the components that still have CCW flowing through them?

A. Reactor Recirculation Pumps and RWCU Non Regen Heat Exchangers

B. Reactor Recirculation Pumps and Control Rod Drive Pump oil coolers

C. Fuel Pool Cleaning and cleanup Heat Exchangers and RWCU Non Regen heat Exchangers

D. RWCU pump coolers and Fuel Pool Cleaning and Cleanup heat Exchangers

Answer: B

Explanation:

Per the ONEP If only one pump is running then isolate the CCW to Fuel Pool HT EX. and isolate CCW to RWCU non-regen Ht EX. This is RO knowledge because it covers the overall mitigating strategy of the ONEP.

‘A’ is wrong - RWCU would be isolated due to performing the actions of the onep.

B is correct.

‘C’ is wrong - both would already be isolated by performing actions of the onep

‘D’ is wrong - FPCCU would already be isolated by performing actions of the onep

Technical References: GLP-OPS-P4200 GLP-OPS-G3336 electrical drawings 05-1-02-V-1, Loss of CCW ONEP		
References to be provided to applicants during exam: None		
Learning Objective: GLP-OPS-P4200, Objective 10		
Question Source:	Bank #	2015 Biennial
(note changes; attach parent)	Modified Bank #	
	New	
Question Cognitive Level:	Memory/Fundamental	
	Comprehensive/Analysis	X
10CFR Part 55 Content:	55.41(b)(10)	

Examination Outline Cross-Reference	Level	RO
201001 CRD Hydraulic	**Tier #**	2
	Group #	2
Knowledge of the effect that a loss or malfunction of the control rod drive hydraulic system will have on the following:	**K/A #**	201001 K3.02
	Rating	2.6
K3.02: Reactor water level		

Question 54

Reactor is shutdown.

CRD Flow Control Valves fail full open.

What is the effect on reactor water level?

A. Reactor water level will remain the same because the pressure control valve will automatically adjust closed to maintain CRD cooling water flow.

B. Reactor water level will remain the same because the excess flow will be diverted to the B21 Reference Leg Purge line.

C. Reactor water level will rise due to rise in CRD cooling water flow.

D. Reactor water level will rise due to rise in CRD drive water flow.

Answer: C

Explanation:
The CRD flow controller will fail upscale causing the flow control valves to fully open. As a result the CRD cooling water flow will rise. The pressure control valve will not automatically adjust to maintain downstream pressure for CRD cooling water and exhaust water.
A. Plausible because the cooling water header flow will cause a change in reactor water level, however, the pressure control valve is a motor operated valve that must be manually adjusted.
B. Plausible because the B21 Reference Leg Purge line comes off of the first header after the flow transmitter that failed.
C. If the student confused the position of the drive water flow and cooling water flow, the failed open flow control valve will cause the cooling water flow to go up.
D. Plausible because the Drive Water header is the first header located after the failed open Flow Control Valves.

Validation
One person selected D.

Technical References:
GFIG-OPS-C1101, Figure 1

References to be provided to applicants during exam: **None**		
Learning Objective:		
Question Source:	Bank #	
(note changes; attach parent)	Modified Bank #	
	New	X
Question History:	Last NRC Exam	N/A
Question Cognitive Level:	Memory/Fundamental	
	Comprehensive/Analysis	X
10CFR Part 55 Content:	55.41(b)(3)	

Examination Outline Cross-Reference	Level	RO
201003 Control Rod and Drive Mechanism	**Tier #**	2
	Group #	2
Ability to monitor automatic operations of the control rod and drive mechanism including:	**K/A #**	201003 A3.01
	Rating	3.7
A3.01: Control rod position		

Question 55

The reactor has just scrammed.

The scram has not been reset.

The ATC Operator is verifying that all control rods are fully inserted.

How could the operator determine that a control rod is stuck in the core at position 21?

__(1)__ RAW DATA mode and depress the ALL RODS pushbutton. The stuck control rod's position will indicate __(2)__ on the Rod Display Module.

A. (1) Select
(2) 22

B. (1) Select
(2) --

C. (1) Deselect
(2) 22

D. (1) Deselect
(2) --

Answer: C
Explanation: The immediate operator actions of the scram ONEP require the operator to verify all control rods are fully inserted. If the operator only depresses "All Rods" and a control rod was stuck at an odd reed switch position then he will only observe the "--" indication and could easily assume that rod is fully inserted. Per the RC&IS SOI, deselecting RAW DATA will cause the RC&IS Rod Display Module (RDM) display the last even rod position stored in the translator file (RIS cabinet). When RAW DATA is selected and a control rod is stuck at an odd reed switch position the RDM will display "--" (it also displays this for a scrammed rod that is fully inserted if the scram has not be reset as is the case for this question). Even though B represents a valid indication it will not allow the operator to determine that a control rod is stuck in the core since the control rods that have fully inserted will display the same indication, as

explained above. Validation Two people selected B		
Technical References: Scram ONEP 04-1-01-C11-2, RC&IS SOI		
References to be provided to applicants during exam: None		
Learning Objective:		
Question Source:	Bank #	1007
(note changes; attach parent)	Modified Bank #	
	New	
Question History:	Last NRC Exam	N/A
Question Cognitive Level:	Memory/Fundamental	
	Comprehensive/Analysis	X
10CFR Part 55 Content:	55.41(b)(6)	

Examination Outline Cross-Reference	Level	RO
201005 RCIS	**Tier #**	2
	Group #	2
Ability to (a) predict the impacts of the following on the rod control and information system; and (b) based on those predictions, use procedures to correct, control, or mitigate the consequences of those abnormal conditions or operations:	**K/A #**	201005 A2.12
	Rating	3.7
A2.12: Rod uncoupled: BWR-6		

Question 56

What is the impact of the CONT ROD OVERTRAVEL annunciator?
What procedure should be used to mitigate the consequences of the annunciator?

A. The control rod has become uncoupled.
Control Rod/Drive Malfunctions ONEP, 05-1-02-IV-1

B. The control rod has been inserted too far.
Control Rod/Drive Malfunctions ONEP, 05-1-02-IV-1

C. The control rod has become uncoupled.
Rod Control and Information SOI, 04-1-01-C11-2

D. The control rod has been inserted too far.
Rod Control and Information SOI, 04-1-01-C11-2

Answer: A

Explanation:
A. Per 03-1-01-1, P&L 2.1.2 and 2.1.3, control rod coupling shall be verified by observing the absence of the control rod over-travel annunciator. If control rod uncoupling is observed then refer to Control Rod/Drive Malfunctions ONEP.
B. Student may be confused with overtravel annunciator with inserting rods too far. The CRD ONEP is correct procedure.
C. Per 03-1-01-1, P&L 2.1.2 and 2.1.3, control rod coupling shall be verified by observing the absence of the control rod over-travel annunciator. The SOI only describes the rod uncoupled alarm. It does not give any guidance on mitigation strategy.
D. Student may be confused with overtravel annunciator with inserting rods too far. The SOI only describes the rod uncoupled alarm. It does not give any guidance on mitigation strategy.

Validation
Two people selected C

Technical References:

03-1-01-1, Cold Shutdown to Generator Carrying Minimum Load (IOI-1) 05-1-02-IV-1, Control Rod/Drive Malfunctions ONEP 04-1-01-C11-2		
References to be provided to applicants during exam: **None**		
Learning Objective:		
Question Source:	Bank #	
(note changes; attach parent)	Modified Bank #	
	New	X
Question History:	Last NRC Exam	N/A
Question Cognitive Level:	Memory/Fundamental	
	Comprehensive/Analysis	X
10CFR Part 55 Content:	55.41(b)(10)	

Examination Outline Cross-Reference	Level	RO
202001 Recirculation	**Tier #**	2
	Group #	2
Ability to predict and/or monitor changes in parameters associated with operating the recirculation system controls including:	**K/A #**	202001 A1.05
	Rating	3.9
A1.05: Reactor power		

Question 57

The plant is operating at rated conditions at 100% Rod Line.

Due to ONEP actions, recirc flow is lowered to 70 Mlbm/hr. What is the final expected reactor power for this transient?

A. 65%

B. 74%

C. 77%

D. 83%

Answer: B

Explanation:

A. Plausible if student misreads axis on graph and swaps axis. 70% power correlates to 65% core.
B. Correct. 100% Rod Line at 70 Mlbm/hr correlates to 74 % core power.
C. Plausible because 77% core power correlates to 70 Mlbm/hr core flow at 105% rod line.
D. Plausible because 83 % power correlates to 70 % core flow and 105% rod line.

Validation
One person selected C

Technical References:
05-1-02-III-3, Reduction in Recirculation System Flow Rate

References to be provided to applicants during exam:
Power to flow map, 05-1-02-III-3, Reduction in Recirculation System Flow Rate

Learning Objective: GLP-OPS-C5102 Obj 3.5, 7

Question Source:	Bank #	653
(note changes; attach parent)	Modified Bank #	
	New	
Question History:	Last NRC Exam	N/A

Question Cognitive Level:	Memory/Fundamental	
	Comprehensive/Analysis	X
10CFR Part 55 Content:	55.41(b)(10)	

Examination Outline Cross-Reference	Level	RO
204000 RWCU	**Tier #**	2
	Group #	2
For the reactor water cleanup system:	**K/A #**	204000 G2.1.28
	Rating	4.1
G2.1.28: Knowledge of the purpose and function of major system components and controls.		

Question 58

To prevent a RWCU system isolation on high differential flow, GGNS procedures direct us to...

A. transfer RWCU to the Pre-Pump Mode before reactor pressure goes below 100 psig during a normal plant cooldown.

B. maximize RWCU system temperature and flow rate to the feedwater lines.

C. never operate RWCU in the Pre-Pump Mode with reactor pressure greater than 120 psig.

D. gradually return RWCU flow to the Regenerative Heat Exchangers when securing blowdown with reactor water temperature greater than 212 °F.

Answer: A

Explanation:
IOI 03-1-01-3 (Plant SD), Attachment II, step 6.16, CAUTION. Pumps must operate in Pre-Pump lineup (suctions connected directly to RPV) when reactor pressure is <100 psig, to ensure adequate NPSH and pump cavitation. If cavitation begins, system pressure perturbations will result in potential false d/p's being felt by the delta-flow transmitters. This could result in an erroneous high delta-flow system isolation.

B is wrong because this action limits feedwater nozzle temperature transients (SOI P/L 3.11).

C is wrong because this action prevents exceeding the USAR temperature limit of 220 F on containment penetrations 87 and 88 (SOI P/L 3.10).

D is wrong because this action avoids thermal shocking of the shell of heat exchangers (SOI P/L 3.5).

Validation
Three people selected D.

Technical References:
IOI 03-1-01-3
04-1-01-G33-1

References to be provided to applicants during exam:

None		
Learning Objective: GLP-OPS-G3336 Obj. 20		
Question Source:	Bank #	1015
(note changes; attach parent)	Modified Bank #	
	New	
Question History:	Last NRC Exam	N/A
Question Cognitive Level:	Memory/Fundamental	X
	Comprehensive/Analysis	
10CFR Part 55 Content:	55.41(b)(10)	

Examination Outline Cross-Reference	Level	RO
223001 Primary CTMT and Aux. **Knowledge of the operational implications of the following concepts as they apply to primary containment system and auxiliaries:** **K5.08: Pressure measurement**	**Tier #**	2
	Group #	2
	K/A #	223001 K5.08
	Rating	2.7

Question 59

Under which of the following conditions will the Normal Drywell Vacuum Relief Valves (E61-F007 and E61-F020) open?

A. 30 seconds after a LOCA if drywell to containment dp is less than +0.87 psid.

B. Drywell pressure is 0.77 psig and Containment pressure is 0.57 psig.

C. Drywell pressure is 1.12 psig, containment pressure is 1.32 psig, and reactor water level is -53".

D. Drywell pressure is 1.12 psig, containment pressure is 1.32 psig, and reactor water level is -162".

Answer: C

Explanation:
Normal vacuum relief requires Drywell to containment dp to be <-.18 psid to open and there can be no LOCA (LSS) signal present.

A is plausible because this is the permissive signal to initiate the CGCS, but initiation will isolate normal vacuum relief.

B is plausible because it gives a dp of +.20 psid and applicants who have not mastered the subject will believe that this psid should have caused normal vacuum relief to actuate.

D is plausible because is gives a dp of -.20 psid but at -162" in the reactor, Normal vacuum relief would be isolated. An applicant could falsely believe that the system is only designed for emergencies during a LOCA and choose this answer over the actual answer.

Technical References:
GLP-OPS-E6100

References to be provided to applicants during exam:
None

Learning Objective: GLP-OPS-E6100 Objective: 6.1

Question Source:	Bank #	329
(note changes; attach parent)	Modified Bank #	
	New	
Question History:	Last NRC Exam	N/A
Question Cognitive Level:	Memory/Fundamental	
	Comprehensive/Analysis	X
10CFR Part 55 Content:	55.41(b)(7)	

Examination Outline Cross-Reference	Level	RO
226001 RHR/LPCI: CTMT Spray Mode	**Tier #**	2
	Group #	2
Knowledge of RHR/LPCI: containment spray system mode design feature(s) and/or interlocks which provide for the following:	**K/A #**	226001 K4.11
	Rating	2.7
K4.11: Prevention of leakage to the environment through system heat exchanger		

Question 60

LOCA has occurred and containment spray has been initiated.

RHR equipment room temperature reaches 170F due to system leakage.

Which group(s) isolation(s) occurred as a result?

A. Group 2 ONLY

B. Groups 2 and 3 ONLY

C. Groups 3 and 4 ONLY

D. Group 2, 3, and 4 ONLY

Answer: D		
Explanation: Per 05-1-02-III-5, Automatic Isolations ONEP, Groups 2, 3, ad 4 all isolate when RHR equipment room temperature reaches 165F. A, B, and C are all plausible because they are partial correct answers.		
Technical References: **05-1-02-III-5, Automatic Isolations ONEP**		
References to be provided to applicants during exam: **None**		
Learning Objective:		
Question Source:	Bank #	
(note changes; attach parent)	Modified Bank #	
	New	X

Question History:	Last NRC Exam	N/A
Question Cognitive Level:	Memory/Fundamental	X
	Comprehensive/Analysis	
10CFR Part 55 Content:	55.41(b)(9)	

Examination Outline Cross-Reference	Level	RO
233000 Fuel Pool Cooling/Cleanup	**Tier #**	2
Knowledge of the physical connections and/or cause-effect relationships between fuel pool cooling and clean-up and the following:	**Group #**	2
	K/A #	233000 K1.02
	Rating	2.6
K1.02: Residual heat removal system: Plant-Specific		

Question 61

The plant is in Mode 4, preparing for a Refueling outage.

Both Fuel Pool Cooling and Cleanup Pumps have tripped and cannot be restored.

RHR A is started and operating in Fuel Pool Cooling Assist mode with the F066A, RHR A FPC Assist Suction open and the F004A, RHR A Suppression Pool Suction closed.

A valid LOCA signal is received.

ADHR trip/enable switch is in normal.

Which of the following describes the response of the RHR A subsystem after LSS sequencing?

A. RHR A will not auto start.

B. RHR A will auto restart on minimum flow.

C. RHR A will auto restart and inject Spent Fuel Pool water into the reactor through the LPCI injection flowpath.

D. The F066A will auto close and the F004A will auto open, RHR A pump will restart in the LPCI mode.

Answer: C
Explanation: Refer to RHR SOI 6.1.1.b Caution. A is incorrect because the RHR A pump will restart and inject. B is incorrect because the F042A will open, due to being in mode 4 and below 476 psig reactor pressure, and provide a flowpath into the reactor. C. The RHR pump will restart after LSS sequence because the F066A is a suction start permissive for

the pump, the F042A injection valve will open and pump the Spent Fuel Pool into the reactor.
D is incorrect because the F066A and the F004A do not have any auto actions.

Validation
Three people selected A and one person selected D.

Technical References:
Refer to RHR SOI 6.1.1.b Caution.
04-1-01-E12-1, RHR System

References to be provided to applicants during exam:
None

Learning Objective: GLP-OPS-E1200 obj 9.5

Question Source:	Bank #	890
(note changes; attach parent)	Modified Bank #	
	New	
Question History:	Last NRC Exam	2008
Question Cognitive Level:	Memory/Fundamental	
	Comprehensive/Analysis	X
10CFR Part 55 Content:	55.41(b)(7)	

Examination Outline Cross-Reference	Level	RO
241000 Reactor/Turbine Pressure Regulator	**Tier #**	2
	Group #	2
Ability to manually operate and/or monitor in the control room:	**K/A #**	241000 A4.07
	Rating	3.5
A4.07: Main Stop/throttle Valves (operation)		

Question 62

Main Control Valves closed position indications are ___(1)___and can be operated on ___(2)___ panel in the control room.

	(1)	(2)
A.	0%	P680
B.	0%	P601
C.	Green Lights	P680
D.	Green Lights	P601

Answer: A		
Explanation: A. NII-R601A (B, C, & D) indicate percent valve open position indication. The main stop and control valve control is located on the P680. B. NII-R601A (B, C, & D) indicate percent valve open position indication. The student may confuse the control for the MSIV's which are located on the P601. C. The student may confuse the MSIV indications which are green lights. The main stop and control valve control is located on the P680. D. The student may confuse the MSIV indications which are green lights. The MSIV valve control is located on the P601.		
Technical References: GLP-OPS-N1136		
References to be provided to applicants during exam: None		
Learning Objective:		
Question Source:	Bank #	
(note changes; attach parent)	Modified Bank #	
	New	X
Question History:	Last NRC Exam	N/A

Question Cognitive Level:	Memory/Fundamental	X
	Comprehensive/Analysis	
10CFR Part 55 Content:	55.41(b)(7)	

Examination Outline Cross-Reference	Level	RO
245000 Main Turbine Gen./Aux.	**Tier #**	2
	Group #	2
Knowledge of the effect that a loss or malfunction of the following will have on the main turbine generator and auxiliary systems:	**K/A #**	245000 K6.02
	Rating	3.5
K6.02: Reactor/turbine pressure control system: Plant-Specific		

Question 63

The plant is operating at 75% power.

A malfunction causes 'A' Main Bypass Control valve to fully open.

What effect will this have on Turbine Control Valve (TCV) position and actual generator MW?

	TCV position	Actual MW
A.	Remains the same	Down
B.	Remains the same	Remains same
C.	Throttle close direction	Down
D.	Throttle close direction	Remains same

Answer: C

Explanation:

A. Plausible if applicant believes the TCV position will not automatically change when the bypass control valve opens. The student may understand that when the Main Bypass Control Valve opens less steam is used to generate power and therefore actual MW will go down.
B. Plausible if applicant believes the TCV position will not automatically change when the bypass control valve opens to maintain actual MW produced same. Actual MW remains the same is plausible if the student believes the TCV position determines the MW produced.
C. This is correct because when the Main Bypass Control valve goes fully open, the TCV will throttle closed to maintain pressure. A combination of the BCV opening and TCV throttling closed causes Actual MW to go down.
D. When the Main Bypass Control valve goes fully open, the TCV will throttle closed to maintain pressure. The actual MW remaining the same is plausible if applicant bases actual MW produced to total steam demand.

Technical References: GFIG-OPS-N3202		
References to be provided to applicants during exam: **None**		
Learning Objective:		
Question Source:	Bank #	
(note changes; attach parent)	Modified Bank #	
	New	X
Question History:	Last NRC Exam	N/A
Question Cognitive Level:	Memory/Fundamental	
	Comprehensive/Analysis	X
10CFR Part 55 Content:	55.41(b)(7)	

Examination Outline Cross-Reference	Level	RO
271000 Offgas	**Tier #**	2
Knowledge of the effect that a loss or malfunction of the offgas systems will have on the following:	**Group #**	2
	K/A #	271000 K3.01
	Rating	3.5
K3.01: Condenser vacuum		

Question 64

The plant is operating at rated power with Offgas Train 'A' in service.

A major tube rupture occurs inside Offgas Condenser 'A'.

Which of the following parameters **LOWERS** in response to this event?

A. Main condenser vacuum

B. Offgas Preheater 'A' Inlet Pressure

C. Offgas Condenser 'A' Level

D. Offgas Condenser 'A' Outlet Temperature

Answer: A

Explanation:
The reason condenser vacuum lowers is simply due to the "back-pressure" placed on the Offgas stream flow felt all the way back through the Offgas system to the Condenser Air Removal System (SJAEs) as a result of the flooded condenser. This is the mechanism for a main condenser degrading (lowering) vacuum.

TBCW flows through the Offgas Condenser tube-side. Thus, a tube rupture results in a flood-up (high level) on the condenser shell-side (at much lower Offgas system pressure).
For this reason, C is wrong.

B is wrong for the same reason. See ARI P845-1A-B1, which shows that Preheater Inlet Pressure goes high (not low) as a result of a flooded Offgas condenser.

D is wrong. This is not quite so obvious as the first two. See ARI P845-1A-C6. When the condenser floods, TBCW recirculation (i.e., heat transfer of BTUs away from the condenser) essentially stops; the "pool" of water in the shell-side becomes ineffective, causing a rise in the Offgas outlet temperature (i.e., less cooling of the Offgas stream through the condenser shell).

Technical References:
GFIG-OPS-N6465
M-1092A
ARIs P845-1A-A6, B1, C6

References to be provided to applicants during exam: **None**		
Learning Objective: GLP-OPS-N6465, OBJ. 25		
Question Source:	Bank #	427
(note changes; attach parent)	Modified Bank #	
	New	
Question History:	Last NRC Exam	2010
Question Cognitive Level:	Memory/Fundamental	
	Comprehensive/Analysis	X
10CFR Part 55 Content:	55.41(b)(5)	

Examination Outline Cross-Reference	Level	RO
286000 Fire Protection	**Tier #**	2
	Group #	2
Knowledge of electrical power supplies to the following;	**K/A #**	286000 K2.02
	Rating	2.9
K2.02: Pumps		

Question 65

The power supply to the motor driven fire pump is:

A. 15BA2

B. 16BB1

C. 11DF

D. 11BD3

Answer: D

Explanation:
A. Student may remember only one motor driven fire pump and could confuse to be ESF powered. Division 1 ESF LCC is 15BA2.
B. Student may remember only one motor driven fire pump and could confuse to be ESF powered. Division 2 ESF LCC is 16BB1. 'A' PAC is also powered from Division 2 ESF.
C. Student may remember that the only motor driven pump is DC bus 11DF.
D. Motor driven fire pump is powered from BOP LCC 11BD3.

Technical References:
04-1-01-R21-11, 15, and 16.
04-1-01-L11-1, Attachment IF

References to be provided to applicants during exam:
None

Learning Objective:

Question Source:	Bank #	
(note changes; attach parent)	Modified Bank #	
	New	X
Question History:	Last NRC Exam	N/A
Question Cognitive Level:	Memory/Fundamental	X
	Comprehensive/Analysis	

10CFR Part 55 Content:	55.41(b)(7)	

Examination Outline Cross-Reference	Level	RO
1.Conduct of Operations	Tier #	3
	Group #	
2.1.3: Knowledge of shift or short-term relief turnover practices.	K/A #	2.1.3
	Rating	3.7

Question 66

The ACRO requests a relief at his position by the CRO for a bathroom break.

Both individuals were present at the beginning of shift brief.

Which of the following is <u>required</u> to be performed?

A. Turnover parameters, from previous shift, of special interest being monitored and required frequency.

B. Perform an Update Brief informing the shift crew of the change.

C. Turnover any compensatory actions in effect from previous shift.

D. Perform a Reactivity Brief.

Answer: B

Explanation:
Per 5.7 [2], EN-OP-115 requires the following 3 things:

- Permission from the SM or CRS
- Verbal turnover
- Update brief to inform the crew.

A is wrong. Per 5.2 [2], Only required if oncoming operator was not present during shift turnover
C is wrong. Per 5.2 [2], Only required if oncoming operator was not present during shift turnover
D is wrong. Only required if reactivity manipulation will be performed

Technical References:
EN-OP-115-3, 5.2 [2]

References to be provided to applicants during exam: None.

Learning Objective: GLP-OPS-PROC, Objective 5

Question Source:	Bank #	254
(note changes; attach parent)	Modified Bank #	

	New	
Question History:	Last NRC Exam	N/A
Question Cognitive Level:	Memory/Fundamental	X
	Comprehensive/Analysis	
10CFR Part 55 Content:	55.41(b)(10)	

Examination Outline Cross-Reference	Level	RO
1. Conduct of Operations	Tier #	3
	Group #	
2.1.13: Knowledge of facility requirements for controlling vital/controlled access.	K/A #	2.1.13
	Rating	2.5

Question 67

Per 01-S-06-4, Access and Conduct in the Control Room, the number of people inside 1H13-P680 panel horseshoe area should be limited to the At-The Controls Operator (ATC) and ___(1)_____ other people, unless otherwise authorized by the ___(2)_____.

	(1)	(2)
A.	Two	ATC
B.	Two	Shift Manager
C.	Three	ATC
D.	Three	Shift Manager

Answer: B

Explanation:
See 01-S-06-4 Step 6.3.6. The number of people inside 1H13-P680 panel horseshoe area should be limited to three (3), unless otherwise authorized by the shift manager.

Three other people is plausible because the area should be limited to three total.
ATC is plausible because the area discussed is the watch area assigned to the ATC.

Technical References:
01-S-06-4

References to be provided to applicants during exam:
None

Learning Objective: GLP–OPS–PROC, Obj. 11.2

Question Source:	Bank #	
(note changes; attach parent)	Modified Bank #	
	New	X
Question History:	Last NRC Exam	N/A

Question Cognitive Level:	Memory/Fundamental	X
	Comprehensive/Analysis	
10CFR Part 55 Content:	55.41(b)(10)	

Examination Outline Cross-Reference	Level	RO
1. Conduct of Operations	Tier #	3
	Group #	
2.1.14: Knowledge of criteria or conditions that require plant-wide announcements, such as pump starts, reactor trips, mode changes, etc	K/A #	2.1.14
	Rating	3.1

Question 68

Site announcements are required under which of the following condition(s):

A. Only EOOS risk changes out of green.

B. Only EOOS risk changes to red.

C. All EOOS risk condition color changes.

D. Only EOOS risk changes escalated up.

Answer: C		
Explanation: Per 02-S-01-41, 6.3.3 Site Announcements. The control room will make site wide announcements when risk conditions change colors.		
Technical References: 02-S-01-41		
References to be provided to applicants during exam: **None**		
Learning Objective: GLP-OPS-PROC, Obj. 31.4		
Question Source:	Bank #	
(note changes; attach parent)	Modified Bank #	
	New	X
Question History:	Last NRC Exam	N/A
Question Cognitive Level:	Memory/Fundamental	X
	Comprehensive/Analysis	
10CFR Part 55 Content:	55.41(b)(10)	

Examination Outline Cross-Reference	Level	RO
2. Equipment Control	**Tier #**	3
	Group #	
2.2.7: Knowledge of the process for conducting special or infrequent tests.	**K/A #**	2.2.7
	Rating	2.9

Question 69

Per EN-OP-116, Infrequently Performed Tests or Evolutions (IPTEs), every IPTE must have a "Controlling Document" with which to actually perform the test or evolution.

Controlling Document types include Work Order Instructions, existing Plant Procedures, and…

A. Engineering Change Instructions.

B. Performance Engineering Instructions.

C. Special Process Instructions.

D. Special Test Instructions.

Answer: D		
Explanation: Per EN-OP-116, section 3.0[7]. A is wrong; has strong face plausibility. B is wrong; this is a partial label for the series "17" procedures at GGNS. C is wrong; these are a subset of the series "07" procedures at GGNS.		
Technical References: EN-OP-116, IPTEs		
References to be provided to applicants during exam: **None**		
Learning Objective: GLP-OPS-PROC, OBJ. 80.0		
Question Source:	Bank #	412
(note changes; attach parent)	Modified Bank #	
	New	
Question History:	Last NRC Exam	2010

Question Cognitive Level:	Memory/Fundamental	X
	Comprehensive/Analysis	
10CFR Part 55 Content:	55.41(b)(10)	

Examination Outline Cross-Reference	Level	RO
2. Equipment Control	Tier #	3
	Group #	
2.2.14: Knowledge of the process for controlling equipment configuration or status.	K/A #	2.2.14
	Rating	3.9

Question 70

Which of the following is considered a temporary modification **required** to be controlled by EN-DC-136, Temporary Modifications?

A. Due to outage activities, a temporary feed is connected to MCC 11B12 to supply its loads.

B. Following an engineering evaluation and approval, a seismic class 1 support is temporarily removed to accommodate a maintenance activity.

C. Temporary scaffolding is installed over a reactor feedwater pump.

D. A circuit board is temporarily removed to support an electrical test.

Answer: A

Explanation:
See EN-DC-136, specifically Attachment 9.2, Part II, Exclusions, Sheet 1 of 4, Part I – SCREENING, and Part II – EXCLUSIONS.

Answer is correct because its activity is not found on the list of Exclusions.

B is wrong because Exclusion #9 applies to this activity.

C is wrong because Exclusion #8 applies to this activity.

D is wrong because Exclusion #11 applies to this activity.

Technical References:
EN-DC-136, Temporary Modifications

References to be provided to applicants during exam:
None

Learning Objective: GLP-OPS-PROC Obj 40.5

Question Source:	Bank #	155
(note changes; attach parent)	Modified Bank #	
	New	

Question History:	Last NRC Exam	2012
Question Cognitive Level:	Memory/Fundamental	X
	Comprehensive/Analysis	
10CFR Part 55 Content:	55.41(b)(10)	

Examination Outline Cross-Reference	Level	RO
2. Equipment Control	Tier #	3
	Group #	
2.2.35: Ability to determine Technical Specification Mode of Operation.	K/A #	2.2.35
	Rating	3.6

Question 71

Which of the following changes in plant conditions (or system status) will <u>necessarily</u> involve a **MODE** change?

A. With the Mode Switch in REFUEL the reactor cavity is flooded up for Core Alterations; operators have now placed the Mode Switch in SHUTDOWN.

B. During a plant shutdown per IOI-3 the RHR Shutdown Cooling reactor pressure interlock has just cleared; 3 hours later average reactor coolant temperature reaches 199°F.

C. Following Core Alterations, RPV water level has been lowered to allow for removal of the main steam line plugs; a total loss of Shutdown Cooling results in average reactor coolant temperature rising above 200°F.

D. Operators have just completed the "Refuel Position One-Rod-Out Interlock" surveillance; that surveillance has failed and the interlock has been declared inoperable.

Answer: B

Explanation:
The "RHR SDC reactor pressure interlock (i.e., 135 psig) has just cleared" indicates we've began SDC while in MODE 3. As soon as temperature drops below 200F, we've done a MODE change…to MODE 4.

A is wrong. MODE 5 (clearly with the cavity flooded) simply moving the M/S to SHUTDOWN does not necessarily involve a MODE change. MODE 5 permits either switch position.

C is wrong. Clearly we're still in MODE 5 (RPV head removed for the plug work), where coolant temperature is irrelevant.

D is wrong. See LCO 3.9.2. This surveillance can only be performed in MODE 5. If it fails we simply remain in MODE 5.

Validation
Three people selected C

Technical References:
Tech Specs, Table 1.1-1

References to be provided to applicants during exam: **None**		
Learning Objective: GLP-OPS-TS001, Objective 5		
Question Source:	Bank #	256
(note changes; attach parent)	Modified Bank #	
	New	
Question History:	Last NRC Exam	N/A
Question Cognitive Level:	Memory/Fundamental	X
	Comprehensive/Analysis	
10CFR Part 55 Content:	55.41(b)(10)	

Examination Outline Cross-Reference	Level	RO
3. Radiation Control	Tier #	3
	Group #	
2.3.13: Knowledge of radiological safety procedures pertaining to licensed operator duties, such as response to radiation monitor alarms, containment entry requirements, fuel handling responsibilities, access to locked high-radiation areas, aligning filters, etc.	K/A #	2.3.13
	Rating	3.4

Question 72

During a refueling outage, operators are moving fuel between the reactor cavity and the spent fuel pool.

An irradiated fuel assembly is dropped and damaged.

Rising airborne activity has been confirmed on CTMT elevation 208'.

Radiation levels have not risen to the point of any automatic isolations or system initiations.

Per the "High Radiation During Fuel Handling" ONEP, which of the following describes required operator actions?

A. Start an available SGTS train but leave Containment Cooling in its Normal Cooling Mode.

B. Start an available SGTS train and place Containment Cooling in its Containment Cleanup Mode.

C. Start both SGTS trains but leave Containment Cooling in its Normal Cooling Mode.

D. Start both SGTS trains and place Containment Cooling in its Low Volume Purge Mode.

Answer: B
Explanation: The ONEP (05-1-02-II-8), section 3.4, directs us to place Containment Cooling in Cleanup Mode (i.e., a second Recirc charcoal filter is placed in service). Section 3.1.2 directs us to start an available SGTS train; starting both trains is not required. For these reasons, choice 'B' is correct. A & C are wrong but plausible because an applicant does not consider the need to change the Containment ventilation lineup beyond starting SBTS. D is plausible because the Containment Cooling System does have a Low Volume Purge Mode, as

well.

NOTE: Reference is provided because question is testing subsequent actions. This is not a direct lookup because the student must look in multiple sections and steps of the procedure to identify the correct answer.

Validation
One person selected A.

Technical References:
05-1-02-II-8, High Radiation During Fuel Handling ONEP

References to be provided to applicants during exam:
05-1-02-II-8, High Radiation During Fuel Handling ONEP

Learning Objective: GLP-OPS-ONEP, Objective 2.0

Question Source:	Bank #	356
(note changes; attach parent)	Modified Bank #	
	New	
Question History:	Last NRC Exam	2011
Question Cognitive Level:	Memory/Fundamental	
	Comprehensive/Analysis	X
10CFR Part 55 Content:	55.41(b)(10)	

Examination Outline Cross-Reference	Level	RO
3. Radiation Control	Tier #	3
	Group #	
2.3.15: Knowledge of radiation monitoring systems, such as fixed radiation monitors and alarms, portable survey instruments, personnel monitoring equipment, etc	K/A #	2.3.15
	Rating	2.9

Question 73

The four high-range, detectors used to monitor post-accident area radiation levels within the Drywell and Containment utilize _____ detectors.

A. Geiger-Mueller tube

B. Ion chamber

C. Scintillation

D. Solid state alpha and beta scintillation

Answer: B

Explanation:
The four high range, ion chamber detectors are used to monitor post-accident area radiation levels within the drywell and containment.

A. Plausible because the 50 general area monitor units use Geiger-Mueller tubes for detectors.
B. Correct.
C. The process liquid monitoring subsystem uses scintillation detectors.
D. Ventilation release rad monitors use dsolid state alpha detectors and beta scintillation detectors.

Technical References:
GLP-OPS-D1721, Page 16 of 73

References to be provided to applicants during exam:
None

Learning Objective: GLP-OPS-D1721 OBJ 5.1

Question Source:	Bank #	
(note changes; attach parent)	Modified Bank #	
	New	X
Question History:	Last NRC Exam	N/A
Question Cognitive Level:	Memory/Fundamental	X
	Comprehensive/Analysis	

10CFR Part 55 Content:	55.41(b)(11)	

Examination Outline Cross-Reference	Level	RO
4. Emergency Procedures / Plan	Tier #	3
	Group #	
2.4.12: Knowledge of general operating crew responsibilities during emergency operations.	K/A #	2.4.12
	Rating	4.0

Question 74

The Shift Manager has made the decision to evacuate the control room due to a fire.

Per the "Shutdown From the Remote Shutdown Panel" ONEP, who is permitted to respond and operate the Remote Shutdown Panels (RSP) and Alternate Shutdown Panels (ASP)?

	RSP	ASP
A.	Only licensed operators	NOBs
B.	Only licensed operators	Only licensed operators
C.	Licensed operators and NOBs	NOBs
D.	SM supervises operations	CRS supervises operations

Answer: A

Explanation:
See the Remote Shutdown ONEP, section 3.2.1.

Only licensed operators (ROs, CRS, FSS) man the RSPs. NOBs can man the ASPs. The Shift Manager reports to the OCC.

Technical References:
05-1-02-II-1, Remote Shutdown ONEP

References to be provided to applicants during exam:
None

Learning Objective: GLP-OPS-ONEP, Objective 1

Question Source:	Bank #	206
(note changes; attach parent)	Modified Bank #	
	New	
Question History:	Last NRC Exam	N/A

Question Cognitive Level:	Memory/Fundamental	X
	Comprehensive/Analysis	
10CFR Part 55 Content:		
	55.41(b)(10)	

Examination Outline Cross-Reference	Level	RO
4. Emergency Procedures / Plan	Tier #	3
	Group #	
2.4.39: Knowledge of RO responsibilities in emergency plan implementation.	K/A #	2.4.39
	Rating	3.9

Question 75

A Site Area Emergency is declared at 1411.

As the communicator, regarding State/Local Agencies, which of the following complies with:

(1) the time limit requirements for the initial notification and
(2) the first follow-up notification?

A. (1) Initial is completed at 1430
(2) first-follow-up is completed at 1525.

B. (1) Initial is completed at 1426
(2) first-follow-up is completed at 1531.

C. (1) Initial is completed at 1425
(2) first-follow-up is completed at 1527.

D. (1) Initial is completed at 1424
(2) first-follow-up is completed at 1523.

Answer: D

Explanation:
Per 10-S-01-6, sections 6.1.1.c and f, the initial notification is to be completed within 15 minutes of declaration (within 15 minutes of 1411) and the follow-up is to be completed within one hour of the initial.
A is wrong; the initial is late.
B is wrong; both the initial and follow-up are late.
C is wrong; the follow-up is late.

NOTE – At GGNS, the RO is a Control Room ERO Communicator, responsible for making the Initial and Follow-up Notifications tested in this question. As such he/she would also be responsible for ensuring such notifications are made within the required time limits. Therefore, this question is in fact a legitimate RO-level question for GGNS, and not an SRO-only one.

Technical References:
10-S-01-6, Notification of Offsite Agencies

References to be provided to applicants during exam: **None**		
Learning Objective: GLP-EP-EPTS6, OBJ. 3		
Question Source:	Bank #	510
(note changes; attach parent)	Modified Bank #	
	New	
Question History:	Last NRC Exam	2010
Question Cognitive Level:	Memory/Fundamental	
	Comprehensive/Analysis	X
10CFR Part 55 Content:	55.41(b)(10)	

GGNS LOT 2015 NRC INITIAL LICENSED OPERATOR WRITTEN EXAMINATION

SRO EXAM

ANSWER KEY

76	C
77	D
78	A
79	C
80	A
81	C
82	B
83	A
84	B
85	D
86	D
87	C
88	A
89	D
90	C
91	A
92	D
93	B
94	C
95	B
96	A
97	D
98	A
99	B
100	C

Examination Outline Cross-Reference	Level	SRO
295001 Partial or Complete Loss of Forced Core Flow Circulation	Tier #	1
	Group #	1
	K/A #	**295001 – 2.4.8**
G2.4.8: Knowledge of how abnormal operating procedures are used in conjunction with EOPs.	Rating	4.5

Question 76

The plant is operating at 100% power.

Due to a completed RCIC surveillance, suppression pool water level is 18.87 ft.

EP-3 has been entered.

Reactor Feedwater pump 'A' trips on overspeed.

- Core flow 58.2 Mlbm/hr
- Reactor power 72 %

Which of the following actions should be directed NEXT by the SRO in order of priority?

A. 1. Lower Suppression Pool level using P11 SOI
   2. Insert control rods to restore power-flow conditions as soon as practical.

B. 1. Insert control rods to restore power-flow conditions as soon as practical.
   2. Lower Suppression Pool level using E51 SOI

C. 1. Insert control rods to restore power-flow conditions as soon as practical.
   2. Lower Suppression Pool level using P11 SOI

D. 1. Lower Suppression Pool level using E51 SOI
   2. Insert control rods to restore power-flow conditions as soon as practical

Answer: C
Explanation: With suppression pool water level at 18.87 ft. EOP 3 is entered at >18.81Ft. A loss of one Feedwater pump will cause a Reactor Recirc FCV runback which requires entry into the Reduction in

Recirculation System Flow Rate ONEP to ensure position on the Power to Flow map. Procedure requires use of Emergency Procedures and ONEPs concurrently. With the given parameters the plot on the power to flow map will be above the MEOD boundary.

Currently EP-3 was entered due to Suppression Pool High level, however the Reduction in recirc ONEP is also entered in conduction with the EP.

Being above the MEOD boundary is an unanalyzed condition therefore it will take priority over high suppression pool level. Subsequent actions of the ONEP give the correct direction to mitigate plant actions. Subsequent action are performed only at the direction of the SRO.

A is wrong because, the steps are correct but listed in the wrong priority, Operation in the MEOD boundary takes priority. Plausible due to the SRO must make a priority decision on the next step for plant operation.

B is wrong because Lowering Suppression pool level should be performed using normal plant systems (i.e. P11 system) not RCIC. Plausible due to first part is correct but should be lower on the priority list and RCIC (E51) should not be used to lower Supp. Pool level, normal plant systems should be used first.

C is correct.

D is wrong because lowering Suppression pool level should be performed using normal plant systems (i.e. P11 system) not RCIC, Plausible due to RCIC (E51) should not be used to lower Supp. Pool level, normal plant systems should be used first, second part is also a subsequent step but should be lower on the priority list

SRO Only (see attached flow chart):

The SRO should

- asses plant conditions and then selecting a procedure or section of a procedure to mitigate, recover, or with which to proceed
- have the knowledge of administrative procedures that specify hierarchy, implementation, and/or coordination of plant normal, abnormal and emergency procedures.

Technical References:

05-1-02-III-3, Reduction in Recirculation System Flow Rate ONEP
EP-3

References to be provided to applicants during exam:

Figure 1 of 05-1-02-III-3, Reduction in Recirc System Flow Rate ONEP

Learning Objective: Document learning objective if possible.

GLP-OPS-ONEP
GLP-OPS-EP01

Question Source:	Bank #	
(note changes; attach parent)	Modified Bank #	

	New	X
Question History:	Last NRC Exam	No
Question Cognitive Level:	Memory/Fundamental	
	Comprehensive/Analysis	X
10CFR Part 55 Content:	55.43(b)(5)	

Examination Outline Cross-Reference	Level	SRO
295016 Control Room Abandonment	Tier #	1
	Group #	1
AA2-Ability to determine and/or interpret the following as they apply to control room abandonment:	K/A #	**295016 - AA2.02**
	Rating	4.3
AA2.02 Reactor water level		

Question 77

The plant is operating at rated power.

- The Control Room is abandoned due to a valid security threat.
- All actions in the Control Room are complete.
- All required Shutdown from the Remote Shutdown Panel ONEP Attachments are complete.
- All High pressure injection is unavailable.
- Reactor pressure is 850 psig.
- Reactor water level indicates less than -160 inches wide range.

(1) The SRO should direct _____.

(2) What direction should be made for restoring reactor water level?

A. (1) Emergency Depressurization

(2) Verify RHR ‘A’ and ‘B’ injection valves auto open at 476 psig reactor pressure

B. (1) Perform pressure reduction 450 psig to 600 psig

(2) Verify RHR ‘A’ and ‘B’ injection valves auto open at 476 psig reactor pressure

C. (1) Perform pressure reduction 450 psig to 600 psig

(2) Direct operators to manually open RHR ‘A’ and ‘B’ injection valves at 476 psig reactor pressure

D. (1) Emergency Depressurization

(2) Direct operators to manually open RHR ‘A’ and ‘B’ injection valves at 476 psig reactor pressure

Answer: D

Explanation:

Stem conditions states loss of all high pressure feed, therefore the SRO should determine that level is lowering and cannot be restored.

Per 05-1-02-II-1, Shutdown from the RSP ONEP, note for step 3.2.11 when level cannot be restored and maintained above -160" on RSP WR instruments Emergency Depressurization is required. The note also states that some EP actions cannot be performed from the RSP and that a 10CFR50.54x action may be necessary.

For the given stem conditions the SRO must enter EP-2 Emergency Depressurization; however, only 6 ADS/SRVs can be operated at the RSP (the Control Room was abandoned). This is accomplished using Shutdown from the Remote Shutdown Panel ONEP Attachments XIV and XV (RHR A/B LPCI Injection Mode). These attachments also state that the RHR INJ VLV Permissive hand switch operation will bypass the 476 psig interlock and that when pressure is below 476 psig to open the injection valve manually.

Per Transient Mitigation Strategy 02-S-01-43, step 6.5.1, SRO are required to direct subsequent actions.

A is wrong - Stem conditions states all attachments have been completed which bypasses the 476 psig auto open permissive and the valves will have to opened manually.

B is wrong - this would not help due to loss of all high pressure feed. The only ECCS systems available at the RSP is RHR A and B that will only inject at approximately 250 psig and stem conditions states all attachments have been completed which bypasses the 476 psig auto open permissive and the valves will have to opened manually

C is wrong- this would not help due to loss of all high pressure feed. The only ECCS systems available at the RSP is RHR A and B that will only inject at approximately 250 psig

D is correct

SRO Only (see attached flow chart):

The SRO should

- asses plant conditions and then selecting a procedure or section of a procedure to mitigate, recover, or with which to proceed
- have knowledge of diagnostic steps and decision points in the EOPs that involve transitions to event specific subprocedures or emergency contingency procedures.

Technical References:

05-1-02-II-1, Shutdown From the Remote Shutdown Panel, step 3.2.11 note
EP-2

References to be provided to applicants during exam: **None**		
Learning Objective: **GLP-OPS-ONEP Obj 53** **GLP-OPS-EP2 Obj 22**		
Question Source:	Bank #	
(note changes; attach parent)	Modified Bank #	
	New	X
Question History:	Last NRC Exam	No
Question Cognitive Level:	Memory/Fundamental	
	Comprehensive/Analysis	X
10CFR Part 55 Content:	55.43(b)(2)	

Examination Outline Cross-Reference	Level	SRO
295019 Partial or Total Loss of Inst. Air	Tier #	1
	Group #	1
G2.4.11: Knowledge of abnormal condition procedures.	K/A #	**295019 – 2.4.11**
	Rating	4.2

Question 78

A loss of Instrument air has occurred.

CRS has entered 05-1-02-V-9, Loss of Instrument Air.

Subsequent action 3.12 states, If ADS air receiver pressures **CANNOT** sufficiently maintain air pressure > _____ **THEN DIRECT** maintenance to **INSTALL** four bottled gas cylinders **AND** regulators to the ADS System air receivers…

A. 125 psig

B. 135 psig

C. 150 psig

D. 165 psig

Answer: A

Explanation:

Per 05-1-02-V-9, Loss of instrument air ONEP, step 3.12, "If ADS air receiver pressures CANNOT sufficiently maintain air pressure > 125 psig OR it is apparent that instrument air cannot be resorted in six hours **THEN DIRECT** maintenance to INSTALL four bottled gas cylinders and regulators to the ADS systems air receivers…"

Entering the loss of instrument air ONEP, this step would be required to be directed by the CRS. 3.12 is a subsequent step of the loss of instrument air onep and per **Transient Mitigation Strategy 02-S-01-43, step 6.5.1, SROs are required to direct subsequent actions.**

A is correct.

B is wrong, but plausible due to this is the upper limit to adjust the regulator in step 3.12.4 e.

C is wrong but plausible at < 150 psig would required the receiver to be declared INOP.

D is wrong but plausible due to this is the max limit for ADS air receivers, listed in steps 3.12.and

CAUTION prior to step 3.12.4 d.

Technical References:

02-S-01-43, Transient Mitigation Strategy step 6.5.1
05-1-02-V-9, Loss of Instrument Air

SRO Only (see attached flow chart):

The SRO should

- asses plant conditions and then selecting a procedure or section of a procedure to mitigate, recover, or with which to proceed.

References to be provided to applicants during exam:

NONE

Learning Objective: Document learning objective if possible.

GLP-OPS-ONEP

Question Source:	Bank #	
(note changes; attach parent)	Modified Bank #	
	New	X
Question History:	Last NRC Exam	No
Question Cognitive Level:	Memory/Fundamental	
	Comprehensive/Analysis	X
10CFR Part 55 Content:	55.41(b)…	
	55.43(b)(5)	

Examination Outline Cross-Reference	Level	SRO
295021 Loss of Shutdown Cooling G2.4.47: Ability to diagnose and recognize trends in an accurate and timely manner utilizing the appropriate control room reference material.	Tier #	1
	Group #	1
	K/A #	**295021 2.4.47**
	Rating	4.2

Question 79

A refueling outage is in progress for 8 days with the following:

- The drywell head is being removed
- RHR 'B' is in Shutdown Cooling (SDC)
- Reactor coolant temperature is 145°F
- Reactor water level is being controlled at +90 inches Shutdown range.

At 0800 a spurious Group 3 isolation occurs. ONEP 05-1-02-III-1, Inadequate Decay Heat Removal has been entered and applicable step are being performed.

I&C reports the problem will be resolved and cooling restored in 45 minutes.

(1) Which of the following describe at what time reactor coolant temperature will exceed 200°F?

(2) Which of the following describes the required Emergency Classification?

A. (1) 0836

(2) Alert

B. (1) 0848

(2) Unusual Event

C. (1) 0836

(2) Unusual Evert

D. (1) 0848

(2) Alert

Answer: C

Explanation:

During a refueling outage a group 3 isolation will cause a loss of both RHR systems and ADHR to provide cooling. Per ONEP 05-1-02-III-1, Inadequate Decay Heat Removal, the CRS should determine time to 200 degrees per step 3.4.3e. To determine this first the student should recognize which graph to use, with the drywell head installed this means that the reactor head is still installed, water level is being maintained at 90 inches which is approximately 12 inches below the main steam lines, therefore, figure 4 should be used. At 7 days after shutdown using the graph and line "Pre-shuffle 150 degrees initial water temp" the time to 200 is approximately 0.6 hours (36 minutes). With a start time of 0800 the time to reach 200 will be at 0836. Using the EALs an Unusual Event, CU3, should be declared. With shutdown cooling restored within 60 minutes an Alert is not applicable.

A is wrong - Alert not applicable

B is wrong - time to 200 will be 0836, 0848 is the time if the 120 degree line is used

C is correct

D is wrong - Alert not applicable and time to 200 will be 0836, 0848 is the time if the 120 degree line is used

SRO Only (see attached flow chart):

The SRO should

- asses plant conditions and then selecting a procedure or section of a procedure to mitigate, recover, or with which to proceed
- have knowledge of administrative procedures that specify hierarchy, implementation, and/or coordination of plant normal, abnormal, and emergency procedures.

Technical References:

ONEP 05-1-02-III-1, Inadequate Decay Heat Removal
10-S-01-1
EAL flow charts

References to be provided to applicants during exam:

ONEP 05-1-02-III-1, Inadequate Decay Heat Removal
EAL flow charts

Learning Objective: Document learning objective if possible.

GLP-OPS-ONEP
GLP-OPS-EPTS6

Question Source:	Bank #	
(note changes; attach parent)	Modified Bank #	
	New	X
Question History:	Last NRC Exam	No

Question Cognitive Level:	Memory/Fundamental	
	Comprehensive/Analysis	X
10CFR Part 55 Content:	55.41(b)(7)	
	55.43	

Examination Outline Cross-Reference	Level	SRO
295030 Low Suppression Pool Water Level	**Tier #**	1
	Group #	1
G2.4.18: Knowledge of the specific bases for EOPs	**K/A #**	**295030 – 2.4.18**
	Rating	4.0

Question 80

Suppression pool level is currently 14.7 ft. and lowering.

CRS is currently directing actions from EP-3.

All actions of EP-3 have been performed or attempted to raise Suppression Pool level.

(1) What is the next action that should be performed?

(2) What is the basis for this action?

A. (1) Enter EP-2, place Mode Switch to shutdown and enter Emergency Depressurization
(2) Ensuring that the RPV is <u>not</u> permitted to remain at pressure if pressure suppression capability is unavailable.

B. (1) Enter EP-2, place Mode Switch to shutdown and Reduce pressure band to 400 psig to 650 psig.
(2) Ensuring that the RPV is <u>not</u> permitted to remain at pressure if pressure suppression capability is unavailable.

C. (1) Enter EP-2, place Mode Switch to shutdown and enter Emergency Depressurization
(2) Maintain adequate NPSH for ECCS systems and RCIC.

D. (1) Enter EP-2, place Mode Switch to shutdown and Reduce pressure band to 400 psig to 650 psig.
(2) Maintain adequate NPSH for ECCS systems and RCIC.

Answer: A
Explanation: See EP Tech Bases, Attachment VI, pages 30-31. Step SPL-9's level of 14.5 feet is all about being

just ~2 feet above the top of the horizontal vents. The concern is that should a LOCA occur, steam discharged through the vents may not be adequately condensed. The language in the page 31 discussion is more direct…this is where we translate this to a situation where "pressure suppression capability is unavailable."

A is correct
B is wrong - ED is required per EPs if Supp Pool cannot be maintained above 14.5 ft.
C is wrong - RCIC has a precaution not to operate RCIC at <14.6ft supp pool level for NPSH concerns, however, this is not the basis for ED on low level.
D is wrong - ED is required per EPs if Supp Pool cannot be maintained above 14.5 ft., and RCIC has a precaution not to operate RCIC at <14.6ft supp pool level for NPSH concerns, however, this is not the basis for ED on low level

SRO Only (see attached flow chart):

The SRO should:

- asses plant conditions and then selecting a procedure or section of a procedure to mitigate, recover, or with which to proceed
- have knowledge of administrative procedures that specify hierarchy, implementation, and/or coordination of plant normal, abnormal, and emergency procedures.
- knowledge of diagnostic steps and decision points in the EOPs that involve transitions to event specific sub-procedures or emergency contingency procedures.

Technical References:

EP-2, RPV Control
EP-3, Containment Control
02-S-01-40, EP Technical Bases, Rev 6

References to be provided to applicants during exam:

None.

Learning Objective: Document learning objective if possible.

GLP-OPS-EP3, Objective 7

Question Source:	Bank #	
(note changes; attach parent)	Modified Bank #	
	New	X
Question History:	Last NRC Exam	No
Question Cognitive Level:	Memory/Fundamental	
	Comprehensive/Analysis	X
10CFR Part 55 Content:	55.43(b)(5)	

Examination Outline Cross-Reference	Level	SRO
295038 High Off-site Release Rate	Tier #	1
	Group #	1
Ability to determine and/or interpret the following as they apply to high off-site release rate:	K/A #	**295038 AA2.04**
	Rating	4.3
AA2.04: Source of off-site release		

Question 81

An ATWS is in progress with reactor water level band is being maintained per EP-2A at -70” to -130” wide range.

A Group 1 isolation signal has been received on Main Steam Tunnel Temperature.

B21-F022A, MSL “A” DRWL INBD ISOL, valve has failed to close.

Dose Assessor has completed offsite dose calculations (attached) and reports site boundary dose indicates a release in progress.

Which of the following indicates the source of the offsite release?

A. Standby Gas Treatment effluent

B. Containment Vent Exhaust effluent

C. Main Steam Tunnel blowout panels (unmonitored)

D. Turbine Building Roof (unmonitored)

Default Flows

Help

PDS Data

PROCESS MONITOR DATA

	CNTMT VENT	TURB BLDG VENT	FUEL HNDLG VENT	RW BLDG VENT	STANDBY GAS A	STANDBY GAS B
FLOW RATE	0	5468	0	18664	3027	3027
	ACTIVITY(cpm)	ACTIVITY(cpm)	ACTIVITY(cpm)	ACTIVITY(cpm)	ACTIVITY(cpm)	ACTIVITY(cpm)
GE MON.–LR	–8.08E+(	6.95E+01	–6.09E+(	–8.08E+(		
SPING–LR CH5	0.00E+00	4.34E–43	4.33E–43	0.00E+00	4.29E–43	4.29E–43
SPING–MR CH7	0.00E+00	4.34E–43	4.36E–43	0.00E+00	4.80E+00	5.00E+00
AXM–HR CH3	0.00E+00	4.34E–43	4.32E–43	0.00E+00	4.29E–43	4.29E–43
AXM–MR CH4	0.00E+00	4.34E–43	4.34E–43	0.00E+00	4.29E–43	4.29E–43

DONE

ACCIDENT DATA

Help

ISOTOPIC MIX: Steam Cycle Mix

EXPOSURE DURATION (DOSE COMMITTMENT)	2.00	
Rx SHUTDOWN DATE/TIME	NOT	S.D.
DATE/TIME OF PROJECTION	09/25/2015	09:02
TIME SINCE Rx SHUTDOWN (hrs)	0.00	

MET DATA

Help

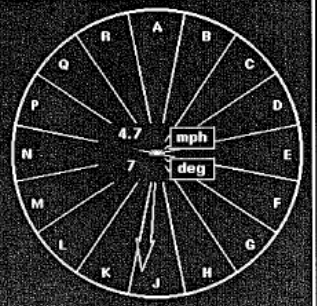

DELTA T:	?
SIGMA THETA:	C843024C
WIND SPEED:	C843011C
WIND DIR:	C843008C

RELEASE DATA

Help

NUCLIDE MIX: DESIGN BASIS

DATE/TIME OF RLS START: 09/25/2015

RLS DURATION (hrs): Default 2

TOTAL IODINE RELEASE RATE (Ci/s)	1.54E−02
TOTAL NG RELEASE RATE (Ci/s)	3.26E−01
TOTAL RELEASE RATE (Ci/s)	3.42E−01

MONITOR DATA — USED FOR CALC

CTMT DATA

FIELD DATA

NUCLIDE MIX DATA

TIME TO NEXT CALCULATION: 36 SECONDS

HOLD

PREVIEW ENF

RECALL DATA

PRINT DATA

EXIT

DOSE DATA

Help

	TEDE DOSE (mrem)	THY.CDE (mrem)	SKIN DOSE (mrem)
SB	1.50E+02	5.82E+02	1.35E+01
2 MI	2.62E+01	1.34E+02	2.99E+00
5 MI	8.19E+00	5.40E+01	1.12E+00
10 MI	3.23E+00	2.56E+01	4.74E−01
15 MI	1.81E+00	1.63E+01	2.69E−01
20 MI	1.16E+00	1.17E+01	1.74E−01

PLUME DATA

	X/Q (sec/m3)	EST PROJECT. ARRIVAL TIME	PLUME WIDTH (miles)
SB	2.64E−04	0908	3.03E−02
2 MI	6.16E−05	0928	1.23E−01
5 MI	2.54E−05	1006	2.80E−01
10 MI	1.25E−05	1110	5.20E−01
15 MI	8.21E−06	1214	7.45E−01
20 MI	6.09E−06	1318	9.60E−01

Answer: C

Explanation:

With Main steam tunnel (MST) high temperature and group 1 isolation the evidence of a steam line break in the Main steam tunnel. A break in the MST will cause the safety blowout panels to open causing an unmonitored release. The parameters given show low rad levels on all exhaust but site boundary rad levels are high. This could only be from an unmonitored release. Reviewing this dose cal is an SRO task.

A is wrong - the PDS screen indicates dose lower than site boundary therefore the source can't be SBGT

B is wrong - the containment vent exhaust will auto isolate at -41.6", and with reactor water level being maintained at -70 to -130 this system has already isolated.

C is correct.

D is wrong - the outboard MSIVs have all closed therefore no steam is not entering the turbine building, plausible due to the turbine building exhaust has a system that has unmonitored release point from the Mechanical vacuum pumps.

SRO Only (see attached flow chart):

SRO only task

The SRO should:

- asses plant conditions and then selecting a procedure or section of a procedure to mitigate, recover, or with which to proceed
- have knowledge of administrative procedures that specify hierarchy, implementation, and/or coordination of plant normal, abnormal, and emergency procedures.
- have knowledge of diagnostic steps and decision points in the EOPs that involve transitions to event specific sub-procedures or emergency contingency procedures.

Technical References:

EP-2A
10-S-01-1
10-S-01-12
PDS Dose Calculation

References to be provided to applicants during exam:

Print of PDS screen

Learning Objective: Document learning objective if possible.

GLP-OPS-EPTS6
GLP-OPS-D1721 OBJ., 12.2

Question Source:	Bank #	
(note changes; attach parent)	Modified Bank #	
	New	X
Question History:	Last NRC Exam	No
Question Cognitive Level:	Memory/Fundamental	
	Comprehensive/Analysis	X
10CFR Part 55 Content:	55.41(b)(7)	
	55.43	

Examination Outline Cross-Reference	Level	SRO
700000 Generator Voltage and Electric Grid Disturbances / 6	Tier #	1
	Group #	1
Ability to determine and/or interpret the following as they apply to generator voltage and electric grid disturbances:	K/A #	**295037 AA2.06**
	Rating	3.5
AA2.06: Generator frequency limitations		

Question 82

Use your provided references to answer this question.

The plant is operating at rated power when grid instabilities cause the following:

Day 1, 0000 hours — Baxter Wilson Line voltage reaches 526 KV and remains there
Franklin Line voltage reaches 524 KV and remains there

Day 1, 0100 hours — Port Gibson Line voltage reaches 120 KV and remains there

Day 1, 0200 hours — Main Generator frequency matches grid frequency at 61.9 Hz

Day 1, 0300 hours — Port Gibson Line voltage reaches 121 KV and remains there

The Plant AC/DC Weekly Lineup (06-OP-1R20-W-0001) has been performed.

Per Tech Specs, if none of the above conditions change, the plant must be in MODE 3 no later than _____.

A. Day 2 at 1200 hours

B. Day 2 at 1400 hours

C. Day 4 at 1200 hours

D. Day 4 at 1500 hours

Answer: B
Explanation: See 06-OP-1R20-W-0001, Attachment I, page 2.

At Day 1, 0000 hours, Baxter Wilson line volts goes out of spec high (limit is 525 KV). We now have only two offsite circuits OPERABLE (Franklin and Port Gibson), but only two are required (Tech Spec LCO 3.8.1; therefore, no Tech Spec action yet applies.

At Day 1, 0100 hours, nothing has changed because the Port Gibson line volts are still in spec (limit is 120.75).

At Day 1, 0200 hours, With main generator frequency matching grid frequency Franklin line frequency goes out of spec high (limit is 61.8 Hz). We now have one of two remaining required offsite circuits inoperable. Per Tech Spec Action 3.8.1.A.2, we have 72 hours to restore one to OPERABLE; otherwise, be in MODE 3 within 12 hours thereafter (per Tech Spec Action 3.8.1.G.2). This would be no later than 84 hours after Day 1, 0200 hours; i.e., Day 4, 1400 hours.

At Day 1, 0300 hours, we now have zero offsite circuits OPERABLE because Port Gibson volts has gone out of spec high. Per Tech Spec Action 3.8.1.C.2, we have 24 hours to restore one to OPERABLE; otherwise, be in MODE 3 within 12 hours thereafter (per Tech Spec 3.8.1.G.2). This would be no later than 36 hours after Day 1, 0300 hours; i.e., Day 2, 1500 hours.

SRO Only (see attached flow chart):

Requires SRO to determine grid frequency controls generator frequency.

The SRO should:

- apply required actions and surveillance requirements in accordance with the rules of application requiredments.
- have knowledge of TS bases that is required to analyze TS required actions and terminology.

Technical References:

06-OP-1R20-W-0001, Plant AC/DC Power Distribution Weekly Lineup
Tech Spec 3.8.1, AC Sources - Operating

References to be provided to applicants during exam:
06-OP-1R20-W-0001, Plant AC/DC Power Distribution Weekly Lineup
Tech Spec 3.8.1, AC Sources - Operating, remove the LCO section

Learning Objective:
GLP-OPS-TS001, Objective 39

Question Source:	Bank #273	
(note changes; attach parent)	Modified Bank #	X
	New	
Question History:	Last NRC Exam	**Yes**
Question Cognitive Level:	Memory/Fundamental	
	Comprehensive/Analysis	X
10CFR Part 55 Content:	55.41(b)(7)	
	55.43	

Examination Outline Cross-Reference	Level	SRO
295011 High Containment Temperature (Mark III Containment Only) **Ability to determine and/or interpret the following as they apply to high Containment temperature:** AA2.02 - Containment Pressure	**Tier #**	1
	Group #	2
	K/A #	**295011 - AA 2.02**
	Rating	4.0

Question 83

A LOCA and ATWS has occurred.

5 minutes later:

- Reactor Power is 4% and lowering
- Standby Liquid Control is injecting
- RHR 'A' and 'B' systems are in Suppression Pool Cooling
- Reactor Water Level is -180" Compensated Fuel Zone, in band of -167" to -191"
- Suppression Pool level is 18.5 feet and rising
- Suppression Pool temperature is 120°F
- Containment pressure is 8.0 psig and rising
- Containment temperature is 155°F
- Drywell temperature is 215°F

The CRS should direct operators to:

A. Initiate Containment Spray

B. Emergency Depressurize

C. Terminate and prevent all injection and lower level band

D. Initiate Containment Purge using attachment 14

Answer: A
Explanation: The SRO is required to interpret Containment Temp vs. Containment pressure to determine the

next step to mitigate the event. Per EP3, Containment Spray should have been initiated prior to entering the unsafe zone of PSP, However the step in the EPs states If CTMT pressure cannot be restored and maintained in the Safe zone of the PSP then Emergency Depressurization is required. First the SRO should verify that he is within the SAFE TO INITIATE area of the CSIPL (Containment Spray Initiation Pressure Limit). With a CTMT pressure of 8 psig and CTMT temperature of 155°F is well within the Safe To Initiate zone. With the statement of "restore and maintain" in the PSP limit, it can be exceeded only if you can restore it within limits. Both RHR systems are available for Containment Spray due to they are currently in Suppression Pool Cooling.

A is correct

B is wrong - An Emergency Depressurization is not required due to the step states to "restore and maintain" which means that the SRO should perform CTMT spray first before an Emergency Depressurization. Plausible if the student does not remember that the step states to restore and maintain.

C is wrong - This step has already been performed due to the level band given is already at the lowered band due to CTMT, Drywell, and reactor parameters from EP-2A. Plausible due to all criteria is met for the lowered band but if student does not recognize that the band has already been lowered.

D is wrong - Containment Purge using Attachment 14 is used after entry into EP-3 to control Containment pressure below 1.23 psig only. The given parameters show the containment pressure is well above the 1.23 psig and other strategies should be used. Plausible due to this step is performed after entry into EP-3.

SRO Only (see attached flow chart):

The SRO should:

- asses plant conditions and then selecting a procedure or section of a procedure to mitigate, recover, or with which to proceed
- have knowledge of administrative procedures that specify hierarchy, implementation, and/or coordination of plant normal, abnormal, and emergency procedures.
- have knowledge of diagnostic steps and decision points in the EOPs that involve transitions to event specific sub-procedures or emergency contingency procedures.

Technical References:

EP2 & EP3

References to be provided to applicants during exam:

EP-1 figures Containment Spray Initiation Pressure Limit (CSIPL) and Pressure Suppression Pressure (PSP)

Learning Objective: Document learning objective if possible.

GLP-OPS-EP001

Question Source:	Bank #	
(note changes; attach parent)	Modified Bank #	
	New	X

Question History:	Last NRC Exam	No
Question Cognitive Level:	Memory/Fundamental	
	Comprehensive/Analysis	X
10CFR Part 55 Content:	55.41(b)(7)	
	55.43	

Examination Outline Cross-Reference	Level	SRO
295022 Loss of CRD Pumps	Tier #	1
	Group #	2
Ability to determine and/or interpret the following as they apply to loss of CRD pumps:	K/A #	**295022 – AA2.03**
	Rating	3.2
AA2.03: CRD mechanism temperatures		

Question 84

The plant is in Mode 2 startup at 950 psig.

The operating CRD pump trips.

A delay in starting the standby CRD pump causes the following alarm.

- CRD HYD TEMP HI, P680-4A2-A4

Local operator reports 5 CRDMs at ≥ 450°F and steady.

Reactor and System Engineering have been notified and reports the following control rods will have time added to their scram times:

	Revised time to notch 13 @ 950 psig
• 32-41	1.45
• 40-29	1.51
• 44-33	1.41
• 52-37	1.41
• 56-37	1.42

Which of the following describes the action that should be taken?

A. No Tech Spec action required

B. Be in mode 3 in 12 hours

C. Fully insert affected control rods in 3 hours

D. Disarm the associated CRDs in 4 hours

Answer: B

Explanation:
All 5 control rods are above the required scram time per tech spec 3.1.4, table 3.1.4-1 is required to have a time of <1.40 seconds. the LCO states No more than 14 operable control rods shall be slow in accordance with the table, and No operable control rod that is slow shall occupy a location adjacent to another Operable control rod that is slow. Since there is only 5 that are now considered to be slow it does not meet the 14 criteria, however control rods 56-37 and 52-37 are adjacent and that meets the b. statement of the LCO.

A is wrong - Action is required

B is correct

C is wrong - action for inop control rod 3.1.3 action C.1

D is wrong - action for inop control rod 3.1.3 action C.2

SRO Only (see attached flow chart):

The SRO should:

- apply required actions and surveillance requirements in accordance with the rules of application requiredments.
- have knowledge of TS bases that is required to analyze TS required actions and terminology.

Technical References:

04-1-02-1H13-P680-4A2-A4, Alarm Response Instruction
Tech Specs 3.1.4

References to be provided to applicants during exam:

04-1-02-1H13-P680-4A2-A4, Alarm Response Instruction
Tech Specs section 3.1 Reactivity Control Systems
Core Control Rod location map

Learning Objective:

GLP-OPS-TS001

Question Source:	Bank #	
(note changes; attach parent)	Modified Bank #	
	New	X
Question History:	Last NRC Exam	No
Question Cognitive Level:	Memory/Fundamental	

	Comprehensive/Analysis	X
10CFR Part 55 Content:	55.41(b)…	
	55.43(b)(5)	

Examination Outline Cross-Reference	Level	SRO
295029 High Suppression Pool Wtr Lvl	Tier #	1
	Group #	2
G2.4.6: Knowledge of EOP mitigation strategies	K/A #	**295029 2.4.6**
	Rating	4.7

Question 85

All level indication has failed full upscale.

Reactor Mode switch has been placed in SHUTDOWN and all control rods are full in.

Suppression Pool water level is 18.9 feet and rising.

Which of the following EP Attachments should the SRO direct to install that will allow HPCS and RCIC to inject to the reactor from the CST per EP5?

A. 1 and 4 only

B. 3 and 5 only

C. 1, 4 and 5 only

D. 1, 3, 4 and 5

Answer: D

Explanation:

With Suppression pool water level at 18.9 ft. the student must recognize that the suctions for HPCS and RCIC have swapped to the Suppression pool. With all reactor level indication failed full upscale HPCS injection valve has closed and interlocked closed, RCIC steam supply valve also receives a close signal on high reactor water level. To ensure HPCS and RCIC is aligned to the CST (as per EP5, "Use CST suction if available") attachment 4 and 1 must be installed. To ensure injection into the reactor attachments 3 and 5 must be installed to bypass the reactor high level valve closure interlock.

A is wrong - this will only bypass the suction swap

B is wrong - this will only bypass the reactor water high level interlock

C is wrong - this will only allow HPCS to inject not RCIC

D is correct.

SRO Only (see attached flow chart):

The SRO should:

- asses plant conditions and then selecting a procedure or section of a procedure to mitigate, recover, or with which to proceed
- have knowledge of when to implement attachments and appendices, including how to coordinate these items with procedure steps.
- have knowledge of diagnostic steps and decision points in the EOPs that involve transitions to event specific sub-procedures or emergency contingency procedures.

Technical References:

EP5
05-S-01-EP-1, Emergency/Severe Accident Procedure Support Documents
02-S-01-40, EP Technical Bases

References to be provided to applicants during exam:

NONE

Learning Objective: Document learning objective if possible.

GLP-OPS-EP01

Question Source:	Bank #	
(note changes; attach parent)	Modified Bank #	
	New	X
Question History:	Last NRC Exam	No
Question Cognitive Level:	Memory/Fundamental	
	Comprehensive/Analysis	X
10CFR Part 55 Content:	55.41(b)(7)…	
	55.43	

Examination Outline Cross-Reference	Level	SRO
209001 LPCS	Tier #	2
	Group #	1
Ability to (a) predict the impacts of the following on the low pressure core spray system; and (b) based on those predictions, use procedures to correct, control, or mitigate the consequences of those abnormal conditions or operations:	K/A #	**209001 – A2.02**
	Rating	3.2
A2.02: Valve closures		

Question 86

The plant is operating at 100% power.

Division 2 Emergency Diesel Generator has been INOP for 24 hours due to a failed surveillance.

Tech Spec 3.8.1 Condition B was entered and associated requirements are being performed.

The BOP operator notices the E21-F011, LPCS MIN FLO TO SUPP POOL, valve going closed.

Investigation determines that the LPCS discharge flow transmitter has failed upscale.

Which of the following indicates the correct LCO to be entered by Tech Specs?

A. Declare RHR ‘B’ and ‘C’ INOP immediately, then
Declare LPCS INOP within 4 hours, then
Enter 3.0.3 immediately

B. Declare LPCS immediately, then
Declare RHR ‘A’ INOP within 4 hours, then
Enter 3.0.3 immediately

C. Declare RHR ‘A’ INOP immediately,
Declare LPCS INOP within 4 hours, then
Enter 3.0.3 immediately.

D. Declare LPCS INOP immediately
Declare RHR ‘B’ and ‘C’ INOP within 4 hours, then
Enter 3.0.3 immediately

Answer: D

Explanation:

With only the DG INOP no other required features are required to be declared INOP as long as the redundant features are operable.

With the min flow valve failing, SOI 04-1-01-E21-1 step 3.15 states "**If** the min flow valve Will **NOT** perform its intended function the LPCS system is declared inop." per Tech Spec Bases this would cause LPCS to be declared INOP immediately. LPCS is a redundant require feature.

Per Tech Spec 3.8.1 Condition B.2 states "Declare required feature(s), supported by the inoperable DG, inoperable when the redundant required feature(s) are inoperable." The completion time states "4 hours from discovery of Condition B concurrent with inoperability of redundant required feature(s)",

When LPCS is declared INOP within 4 hours RHR 'B' and 'C', which are required features supported by the inop DG must be declared inop.

This would make you have 3 ECCS systems inop, and per Tech Spec 3.5.1 Condition H states "Three or more ECCS injection/spray systems inop, Enter 3.0.3 Immediately.

A is wrong - due to RHR 'B' and 'C' are not required to be declared inop immediately, 4 hours is given in 3.8.1 B2. Plausible if the student believes that the required features are required to be declared inop immediately.

B is wrong - due to RHR 'A' is not powered from Div. 2 DG and therefore would not be required to be declared inop. Plausible if the student does not remember which ECCS systems are powered by which EDG.

C is wrong - due to RHR 'A' is not powered from Div. 2 DG and therefore would not be required to be declared inop. Plausible if the student does not remember which ECCS systems are powered by which EDG, Plausible if the student is confused on which ECCS system to declare inop and when.

D is correct

SRO Only (see attached flow chart):

The SRO should:

- apply required actions and surveillance requirements in accordance with the rules of application requirements.
- have knowledge of TS bases that is required to analyze TS required actions and terminology.
- apply generic LCO requirements.

Technical References:

Tech Specs 3.5.1, 3.0.3, 3.8.1
Tech Spec Bases 3.5.1

References to be provided to applicants during exam:

Tech Specs 3.5.1		
Learning Objective: GLP-OPS-EP01		
Question Source:	Bank #	
(note changes; attach parent)	Modified Bank #	
	New	X
Question History:	Last NRC Exam	No
Question Cognitive Level:	Memory/Fundamental	
	Comprehensive/Analysis	X
10CFR Part 55 Content:	55.41(b)…	
	55.43(b)(5)	

Examination Outline Cross-Reference	Level	SRO
212000 RPS	Tier #	2
	Group #	1
G2.2.22: Knowledge of limiting conditions for operations and safety limits	K/A #	212000 2.2.22
	Rating	4.7

Question 87

The plant is at 100% power.

APRM Channel 1 is INOP and bypassed due to failing a surveillance.

Inverter 1Y96 trips.

(1) What is the immediate result on plant operation?

(2) Which of the following describes the required APRM Tech Spec action?

A. (1) Division 1 half scram

(2) Be in Mode 3 in 12 hours

B. (1) Division 2 half scram

(2) Place channel in trip in 12 hours

C. (1) Division 1 half scram

(2) Place channel in trip in 12 hours

D. (1) Division 2 half scram

(2) Be in Mode 3 in 12 hours

Answer: C
Explanation: With APRM Ch 1 inop 3 are left. 1Y96 inverter powers the panel for APRM Ch. 3. Now only 2 APRM channels are left. 3.3.1.1 should be entered in condition A. When power is lost to the APRM panel the voter will de-energize and cause a half scram on RPS. Channels 1 and 3 feed

Division 1 RPS and channels 2 and 4 feed Division 2 RPS. Therefore a Division 1 half scram will occur immediately.

A is wrong - If student uses condition listed in table 3.3.1.1-1 this would be the required action and time.

B is wrong - A division 1 half scram will occur

C is correct

D is wrong - If student uses condition listed in table 3.3.1.1-1 this would be the required action and time. A division 1 half scram will occur

SRO Only (see attached flow chart):

The SRO should:

- apply required actions and surveillance requirements in accordance with the rules of application requirements.
- have knowledge of TS bases that is required to analyze TS required actions and terminology.

Technical References:

Tech Specs 3.3.1.1
04-1-01-C51-1

References to be provided to applicants during exam:

Tech Specs 3.3.1.1

Learning Objective:

GLP-OPS-C5101 - OBJECTIVE 10, 14

Question Source:	Bank #	
(note changes; attach parent)	Modified Bank #	
	New	X
Question History:	Last NRC Exam	No
Question Cognitive Level:	Memory/Fundamental	
	Comprehensive/Analysis	X
10CFR Part 55 Content:	55.41(b)(7)…	
	55.43	

Examination Outline Cross-Reference	Level	SRO
259002 Reactor Water Level Control **Ability to (a) predict the impacts of the following on the reactor water level control system; and (b) based on those predictions, use procedures to correct, control, or mitigate the consequences of those abnormal conditions or operations:** A2.04: RFP runout condition	**Tier #**	2
	Group #	1
	K/A #	**259002 – A2.04**
	Rating	3.1

Question 88

The plant is operating at 100% power.

Reactor Feedwater Pump 'A' controller has an internal fault causing pump speed to rise to maximum runout conditions.

NO annunicators are present.

The At the Controls Operator performs the immediate actions of the Feedwater Malfunctions ONEP and reports NO change in conditions.

(1) Which of the following describes the plant response?

(2) What action should the SRO direct the ATC to perform?

A. (1) 'B' Reactor Feedwater pump will reduce flow to attempt to maintain level
   (2) Trip the 'A' Reactor Feed Pump

B. (1) 'A' Reactor Feedwater pump control will trip to EMERGENCY MANUAL, 'B' Reactor Feedwater pump will attempt to maintain level.
   (2) Lower the 'A' Reactor Feed pump speed using EMERGENCY MANUAL RAISE / LOWER pushbuttons to match flows

C. (1) 'B' Reactor Feedwater pump will reduce flow to attempt to maintain level.
   (2) Select MANUAL and lower the 'A' Reactor Feed pump speed using RAISE / LOWER pushbuttons to match flows.

D. (1) 'A' Reactor Feedwater pump control will trip to MANUAL, 'B' Reactor Feedwater pump will attempt to maintain level.
   (2) Trip the 'A' Reactor Feed Pump

Answer: A

Explanation:
With A feed pump speed controller faulted and rising to max runout conditions the B feed pump is still in Auto and will reduce flow to attempt to control level. The SRO should enter the Feedwater Malfunctions ONEP.

The stem states that immediate actions have been performed (i.e. place speed controller in Manual and reduce output) and no change in conditions, which means that the feed pump controller will not respond to Manual operation. After the SRO has entered the ONEP, subsequent actions are "If in dual reactor feed pump operation and one reactor feed pump has failed to maximum demand, then trip the affected pump and verify reactor recirculation system FCV runback." **Per Transient Mitigation Strategy 02-S-01-43, step 6.5.1, SRO are required to direct subsequent actions.**

To receive an EMERGENCY MANUAL actuation the governor control valve must have troubles as indicated by actuation of P680 alarm RFPT A(B) GOV VLV CONT TROUBLE. The stem states that no alarms are present.

Therefore the student should be able to recognize that the 'B' feed pump will reduce speed in automatic to compensate for the rise in speed of the 'A' feed pump and that EMERGENCY MANUAL was not actuated.

The operator cannot select EMERGENCY MANUAL it must be actuated.

The RFPT will not trip to MANUAL operation on the startup section of the control panel.

RFPT are controlled from two areas of the P680 panel. During startup the RFPT is controlled from the flat section or section 2C, controls for the pump are MANUAL, SPEED AUTO, AND EMERGENCY MANUAL. After power is sufficient the control is transferred to the Speed controller on the vertical section or section 2B with the other control area in FW AUTO..

A is correct

B is wrong - Feedpump controls will not transfer to EM, a detected problem with the governor control valve must happen. The SOI will not help this condition but it does have guidance for operation of the feed pump in emergency manual.

C is wrong - An internal fault in the M/A controller and performance of immediate actions did not help the student should assume that the MANUAL selection will not occur. This action is not a subsequent action.

D is wrong - The MANUAL control will not auto select, from the stem the student should recognize a failure that cannot be corrected .

SRO Only (see attached flow chart):

The SRO should:

- asses plant conditions and then selecting a procedure or section of a procedure to mitigate, recover, or with which to proceed
- have knowledge of diagnostic steps and decision points in the EOPs that involve transitions to event specific sub-procedures or emergency contingency procedures.

Technical References:

04-1-01-N21-1, Feedwater SOI
05-1-02-V-7, Feedwater System Malfunctions

References to be provided to applicants during exam:

None

Learning Objective: Document learning objective if possible.

Question Source:	Bank #	
(note changes; attach parent)	Modified Bank #	
	New	X
Question History:	Last NRC Exam	No
Question Cognitive Level:	Memory/Fundamental	
	Comprehensive/Analysis	X
10CFR Part 55 Content:	55.41(b)…	
	55.43(b)(2)	

Examination Outline Cross-Reference	Level	SRO
262002 UPS (AC/DC) 2.4.11 Knowledge of abnormal condition procedures.	Tier #	2
	Group #	1
	K/A #	**262002 2.4.11**
	Rating	4.0

Question 89

ESF Inverter 1Y88 has tripped.

The following has occurred:

- Division 2 NS^4 group isolation signal
- Division 2 Half Scram
- Division 2 Group 1 isolation signal

Which of the following Emergency/Abnormal procedures should have the highest priority to be entered first to mitigate further plant transients?

A. Inadequate Decay Heat Removal ONEP

B. Loss of A/C Power ONEP

C. EP-3

D. Loss of Instrument Air

Answer: D

Explanation:
A loss of 1Y88 will cause a loss of logic power to various systems. The main problem is a Division 1 Aux / Containment isolation signal, which causes instrument Air and Drywell chilled water to isolate along with all other NSSSS isolation valves. If Instrument air is not restored to the containment within 1 minute, control rods will begin to drift causing a manual scram signal. Therefore, to prevent further transients on the plant the SRO should enter the Loss of Instrument air which gives the direction to "Determine the cause for loss of Instrument Air and Attempt to restore."

A is wrong - this ONEP will be entered due to a loss of Fuel Pool Cooling and Cleanup but not the highest priority

B is wrong - even though the inverter system provides AC power this ONEP only covers the larger buses, This ONEP should not be entered. Plausible due to it being a loss of AC power source.

C is wrong - EOP-3 will eventually be entered due to high drywell temperature (>135°F) due to the loss of the Drywell Chilled water system during the isolation. However, no further transients will occur if

drywell temperature reaches the EP entry condition.

D is correct.

SRO Only (see attached flow chart):

The SRO should:

- asses plant conditions and then selecting a procedure or section of a procedure to mitigate, recover, or with which to proceed
- have knowledge of diagnostic steps and decision points in the EOPs that involve transitions to event specific sub-procedures or emergency contingency procedures.

Technical References:

ONEP 05-1-02-V-9, Loss of Instrument Air
ONEP 05-1-02-I-4, Loss of AC Power
ONEP 05-1-02-III-1, Inadequate Decay Heat Removal
EP-3, Containment Control

References to be provided to applicants during exam:

None

Learning Objective:

GLP-OPS-ONEP

Question Source:	Bank #	
(note changes; attach parent)	Modified Bank #	
	New	X
Question History:	Last NRC Exam	No
Question Cognitive Level:	Memory/Fundamental	
	Comprehensive/Analysis	X
10CFR Part 55 Content:	55.41(b)(7)…	
	55.43	

Examination Outline Cross-Reference	Level	SRO
400000 Component Cooling Water	Tier #	2
	Group #	1
Ability to (a) predict the impacts of the following on the component cooling water system; and (b) based on those predictions, use procedures to correct, control, or mitigate the consequences of those abnormal conditions or operations:	K/A #	**400000 – A2.01**
	Rating	3.4
A2.01: Loss of CCW pump		

Question 90

The Component Cooling Water system is operating with the following pump alignment:

- A pump running
- B pump running
- C pump tagged out for maintenance

The Component Cooling Water pump 'A' trips.

(1) Which of the following describes the component(s) that are considered to be the highest priority to direct operators **in the control room** to monitor temperature?

(2) If it is determined that this component's temperature cannot be maintained below the alarm setpoint, what action should the CRS direct?

A. (1) Spent Fuel Pool

(2) Start RHR in Fuel pool cooling assist mode

B. (1) CRD pump

(2) Reduce core flow to 70mlbm/hr

C. (1) Reactor Recirculation Pumps

(2) Manually Scram the Reactor

D. (1) RWCU Non-Regen Outlet

(2) Trip the RWCU pumps

Answer: C

Explanation:
The plant is in a partial loss of CCW, ONEP Loss of CCW The component that has the highest priority and the reason for isolating systems is to provide more cooling water to the Reactor Recirculation pumps. Per the Loss of CCW ONEP Subsequent actions step 3.2.4b "If Reactor Recirc pump bearing, stator OR seal cavity temperatures exceed OR is expected that will exceed alarm setpoints, then scram the reactor and trip Reactor Recirc pumps. **Per Transient Mitigation Strategy 02-S-01-43, step 6.5.1, SRO are required to direct subsequent actions.**

A is wrong - The Fuel Pool Cooling and Cleanup system is one of the first systems to be isolated to provide more cooling to the Reactor Recirc pumps, plausible due to after CCW has been isolated spent fuel pool temp will be monitored and another ONEP will be entered to mitigate the high temp. Spent Fuel Pool would not be highest priority.

B is wrong - CRD oil temperature is monitored locally, the CRD pumps are rotated per the loss of CCW ONEP but do not have any alarms associated with high oil temp only locally monitored.. If Oil Temp reaches 135°F then the ONEP instructs the CRS to direct a Manual Scram. A reduction in core flow is performed when recirc pumps temps are rising and not CRD. CRD is not the highest priority.

C is correct

D is wrong - RWCU is another system that is isolated to provide more flow to the Reactor Recirc pumps. Non-regen outlet is only monitored to determine if the pumps need to be tripped prior to placing the filters in the HOLD condition. RWCU is not a priority.

SRO Only (see attached flow chart):

The SRO should:

- asses plant conditions and then selecting a procedure or section of a procedure to mitigate, recover, or with which to proceed
- have knowledge of administrative procedures that specify hierarchy, implementation, an/or coordination of plant normal, abnormal, and emergency procedures..

Technical References:

05-1-02-V-1, Loss of Component Cooling Water

References to be provided to applicants during exam:

None.

Learning Objective:

GLP-OPS-ONEP

Question Source:	Bank #	
(note changes; attach parent)	Modified Bank #	
	New	X
Question History:	Last NRC Exam	No
Question Cognitive Level:	Memory/Fundamental	
	Comprehensive/Analysis	X
10CFR Part 55 Content:	55.41(b)…	
	55.43(b)(5)	

Examination Outline Cross-Reference	Level	SRO
202002 Recirculation Flow Control	Tier #	2
	Group #	2
Ability to (a) predict the impacts of the following on the recirculation flow control system; and (b) based on those predictions, use procedures to correct, control, or mitigate the consequences of those abnormal conditions or operations:	K/A #	**202002 - A2.09**
	Rating	3.1
A2.09: Recirculation Flow mismatch		

Question 91

The plant is operating at 100% power.

Plant conditions require core flow to be immediately reduced to 70 Mlbm/hr.

After the ATC reaches 70 Mlbm/hr, he reports the following conditions:

- Reactor Recirculation 'A' Driving Flow 29 kgpm
- Reactor Recirculation 'B' Driving Flow 23.5 kgpm
- Total Jet Pump Flow 70 mlbm/hr

(1) Which of the following would be the action directed by the SRO?

(2) Which of the following describes the time limit required to perform the action?

A. (1) Balance loop flows to within 4460 gpm maintaining 70 Mlbm/hr core flow.

(2) Within 2 hours.

B. (1) Balance loop flows to within 2230 gpm maintaining 70 Mlbm/hr core flow.

(2) Within 30 minutes

C. (1) Balance loop flows to within 4460 gpm maintaining 70 Mlbm/hr core flow.

(2) Within 30 minutes.

D. (1) Balance loop flows to within 2230 gpm maintaining 70 Mlbm/hr core flow.

(2) Within 2 hours.

Answer: A

Explanation:

With the given indication, the student should recognize that loop flows are outside the required mismatch, at < 78.7 Mlbm/hr (70%) core flow loop flows should be within 4460 gpm (10%). Per 05-1-02-III-3, Reduction in Recirculation System Flow Rate ONEP **subsequent actions 3.7**, "At less than 78.7 Mlbm/hr core flow, BALANCE loop flows to within 4460 gpm.

Core flow should be maintain at <70 Mlbm/hr due to the immediate action.

Tech Specs 3.4.1 requires matched flows and if out of limits then condition A would be entered and flows must be matched within 2 hours or one recirc loop will be shutdown.

A is correct

B is wrong - the 2230 gpm flow rate given is if above 70% core flow or 78.7 Mlbm/hr and the time limit is for tech spec TR3.4.1 Single loop operation to maintain <44,600 gpm in operating loop, if above that limit then restore within 30 minutes. Plausible if student confuses the 70% limit or the tech spec flow requirements for dual loop and single loop. .

C is wrong - the time limit is for tech spec TR3.4.1 Single loop operation to maintain <44,600 gpm in operating loop, if above that limit then restore within 30 minutes. Plausible if student confuses the tech spec flow requirements for dual loop and single loop. .

D is wrong - the 2230 gpm flow rate given is if above 70% core flow or 78.7 Mlbm/hr, Plausible if student confuses the 70% limit.

SRO Only (see attached flow chart):

The SRO should:

- asses plant conditions and then selecting a procedure or section of a procedure to mitigate, recover, or with which to proceed
- have knowledge of administrative procedures that specify hierarchy, implementation, an/or coordination of plant normal, abnormal, and emergency procedures..
- have knowledge of TS bases that is required to analyze TS required actions and terminology

Technical References:

ONEP 05-1-02-III-6, Jet Pump Anomalies
ONEP 05-1-02-III-3, Reduction in Recirculation System Flow Rate ONEP

References to be provided to applicants during exam:

NONE

Learning Objective:

GLP-OPS-ONEP,
GLP-OPS-B3300,

Question Source:	Bank #	
(note changes; attach parent)	Modified Bank #	

	New	X
Question History:	Last NRC Exam	No
Question Cognitive Level:	Memory/Fundamental	
	Comprehensive/Analysis	X
10CFR Part 55 Content:	55.41(b)(7)…	
	55.43	

.Examination Outline Cross-Reference	Level	SRO
219000 RHR/LPCI: Torus/Pool Cooling Mode	**Tier #**	2
	Group #	2
Ability to (a) predict the impacts of the following on the RHR/LPCI: Torus/suppression pool cooling mode; and (b) based on those predictions, use procedures to correct, control, or mitigate the consequences of those abnormal conditions or operations:	**K/A #**	**219000– A2.09**
	Rating	2.9
A2.09: Inadequate room cooling		

Question 92

A reactor shutdown is in progress in Mode 3 at 500 psig reactor pressure.

Due to elevated Suppression Pool temperature of 94°F, RHR 'A' system is started in Suppression Pool Cooling mode. Tech Spec 3.5.1 Condition A has been entered.

RHR 'A' room cooler breaker trips and will not reset. RHR room temperature is currently 146°F and rising.

(1) Which of the following describes the impact on the RHR 'A' system?

(2) Which of the following describes the most limiting Tech Spec completion time?

A. (1) No impact on the system due to being in mode 3 and system already being inop per Tech Spec 3.5.1.

(2) 7 days.

B. (1) Declare RHR 'A' Suppression Pool Cooling INOP per Tech Spec 3.6.2.3 and enter Tech Spec 6.7.3 for room temperature.

(2) 8 hours.

C. (1) Declare RHR 'A' Containment Spray INOP per Tech Spec 3.6.1.7, Shutdown Cooling INOP per 3.4.9 and enter Tech Spec 6.7.3 for room temperature

(2) 4 hours

D. (1) Declare RHR 'A' Suppression Pool Cooling INOP per Tech Spec 3.6.2.3 and Containment Spray INOP per Tech Spec 3.6.1.7 only.

(2) 7days.

Answer: D

Explanation:
With RHR 'A' running in Suppression pool cooling once the Test Return valve (E12-F024A) is opened the CRS is required to enter Tech Sped 3.5.1 condition A, SOI 04-1-01-E12-1 step 3.9 states "The LPCI Mode of RHR 'A', 'B' and 'C' is inoperable whenever the associated test return valve (E12-F024A, E12-F024B and E12-F021) is open. **REFER** to LOC 3.5.1 and 3.5.2.

When the RHR 'A' room cooler trips SOI 04-1-01-E12-1 step 3.2.9 states, "The RHR room coolers (T51) are required for operability of the respective RHR pump." Tech Spec Bases states that for Suppression Pool Cooling and Containment Spray system to be operable the pump is required.

Therefore, Suppression Pool Cooling (TS 3.6.2.3) and Containment Spray (TS 3.6.1.7) must be entered and declared inop.

A is wrong - Suppression Pool Cooling and Containment Spray are required in Mode 3, TS 3.5.1.only covers LPCI Mode. Completion time is correct. Plausible if the student believes that with a room cooler inop 3.5.1 is the only TS to be entered.

B is wrong - The first part of answer (1) is correct however, TS 6.7.3 should not be entered. ECCS room temp must be >150°F before this spec is entered. Completion time is wrong but based on the TS for room temp. Plausible if the student believes that Suppression Pool cooling is the only TS to be entered for RHR other than 3.5.1. If the student miss reads the table in TS 6.7.3 for ECCS rooms and believes that the setpoint has been exceeded.

C is wrong - The first part of answer (1) is correct however, TS 6.7.3 should not be entered. ECCS room temp must be >150°F before this spec is entered also, Shutdown Cooling TS 3.4.9 is not applicable due to being at 500 psig reactor pressure, which is above the "RHR Cutin pressure" of 135 psig listed in the applicable section of 3.4.9. Completion time is wrong but based on the TS for Shutdown Cooling. Plausible if the student believes that Containment Spray is the only TS to be entered for RHR other than 3.5.1. If the student miss reads the table in TS 6.7.3 for ECCS rooms and believes that the setpoint has been exceeded..

D is correct - Per System Operating Instruction 04-1-01-E12-1 step 3.2.9 states, "The RHR room coolers (T51) are required for operability of the respective RHR pump." Tech Spec Bases states that for Suppression Pool Cooling and Containment Spray system to be operable the pump is required.

SRO Only (see attached flow chart):

The SRO should:

- have knowledge of TS bases that is required to analyze TS required actions and terminology
- apply required actions and surveillance requirements in accordance with rules of application requirements.

Technical References:

Tech Specs

3.5.1
3.6.1.7
3.6.2.3
3.4.9

6.7.3		
References to be provided to applicants during exam: 3.5.1 3.6.1.7 3.6.2.3 3.4.9 6.7.3		
Learning Objective: <u>GLP-OPS-TS001 Obj 5</u>		
Question Source:	Bank	
(note changes; attach parent)	Modified Bank #	
	New	X
Question History:	Last NRC Exam	No
Question Cognitive Level:	Memory/Fundamental	
	Comprehensive/Analysis	X
10CFR Part 55 Content:	55.41(b)…	
	55.43(b)(5)	

Examination Outline Cross-Reference	Level	SRO
259001 Reactor Feedwater	Tier #	2
	Group #	2
G2.2.38: Knowledge of conditions and limitations in the facility license.	K/A #	**259001 2.2.38**
	Rating	4.5

Question 93

The plant is at rated power when the following occurs:

- P680 alarm FW HTR 6B LVL HI is received.
- ATC reports approximately 1.0 Mlbm/hr difference in Reactor Feedwater pump suction flow and Total Feedwater system flow.
- Reactor Power is indicating 4410 MWT
- Feedwater temperature had lowered by 5°F

The SRO will transition to which of the following procedures to direct the crew actions?

A. ARI 04-1-02-1H13-P680-2A-A10, FW HTR 6B LVL HI

B. IOI 03-1-02-2, Power Operations.

C. ONEP 05-1-02-V-5, Loss of Feedwater Heating.

D. System Operating Instruction, 04-1-01-N23-1

Answer: B

Explanation:

FW HTR 6B is a high pressure heater, a tube leak would cause a Hi level condition and cause a difference in flow on the feedwater system. With this lead the Feedwater control system will compensate and provide more flow to the vessel. This increase in flow and reduced efficiency of the HP feedwater heater causes a reduction in feedwater temperature which in turn causes a rise in Reactor Power. GGNS license states not to exceed 4408 MWT. With the indication of 4410 the SRO should direct the crew to lower reactor power per IOI-2 to within the maximum power limit.

A is wrong - This ARI is good for the feedwater heater hi level, however reactor power must be reduced and this ARI does not give that direction. Plausible due to if the student does not recognize exceeding the power limit the ARI would give direction to monitor and enter the SOI

B is correct - 03-1-01-2, step 2.27

C is wrong - The ONEP has not reached an entry condition yet a HI-HI level is required prior to entering the ONEP. Plausible due to if the student does not recognize that only the Hi level has

occurred not the HI Hi level.

D is wrong - System operating instruction gives guidance to isolate the heater which is a possibility after reactor power is reduced. Plausible due to this procedure is referenced in the ARI mentioned in answer A.

SRO Only (see attached flow chart):

The SRO should:

- asses plant conditions and then selecting a procedure or section of a procedure to mitigate, recover, or with which to proceed
- have knowledge of administrative procedures that specify hierarchy, implementation, an/or coordination of plant normal, abnormal, and emergency procedures..

Technical References:

03-1-01-2, step 2.27
ONEP 05-1-02-V-5, Loss of Feedwater Heating

References to be provided to applicants during exam:

None

Learning Objective:

GLP-OPS-ONEP
GLP-OPS-IOI02

Question Source:	Bank #	
(note changes; attach parent)	Modified Bank #	
	New	X
Question History:	Last NRC Exam	No
Question Cognitive Level:	Memory/Fundamental	X
	Comprehensive/Analysis	
10CFR Part 55 Content:	55.41(b)(7)…	
	55.43	

Examination Outline Cross-Reference	Level	SRO
Conduct of Operations	**Tier #**	3
	Group #	
Knowledge of individual licensed operator responsibilities related to shift staffing, such as medical requirements, “no-solo” operation, maintenance of active license status, 10CFR55, etc.	**K/A #**	**2.1.4**
	Rating	3.3

Question 94

An on-shift SRO, qualified as an STA also, has been on short term disability.

Total time away from work was 5 months (April thru August)

He has completed his STA proficiency.

He is scheduled to work the following hours:

Sunday 1	Monday 2	Tuesday 3	Wednesday 4	Thursday 5	Friday 6	Saturday 7
12 hrs parallel as CRS	12 hrs parallel as CRS	12 hrs as STA/FSS			12 hrs as STA/FSS	12 hrs as STA/FSS
Sunday 8	Monday 9	Tuesday 10	Wednesday 11	Thursday 12	Friday 13	Saturday 14
12 hrs as STA/FSS				12 hrs parallel as CRS	12 hrs parallel as CRS	12 hrs parallel as CRS

Which of the following describes when the SRO has completed the watch standing proficiency?

A. Completion of Sunday the 1st

B. During the shift on Friday the 6th

C. During the shift on Friday the 13th

D. Completion of Saturday the 14th

Answer: C

Explanation:

Per 02-S-01-39, Maintaining Watchstanding Proficiency,6.1.1c “SROs who fail to meet watchstanding per quarter and are designated to maintain proficiency by parallel watchstanding will be returned to/maintained in active status as follows:

Licensee shall complete 40 hours (8 hours for Refueling SRO only) of parallel watch.”

A is wrong - This would be correct if it were for the Refuel SRO per step 6.1.1c (1)

B is wrong - This completes >than 40 hours, however the NOTE prior to step 6.1.1b states “An SRO may not take credit for watchstanding proficiency when filling the position of STA or FSS
.
C is correct

D is wrong - This would be correct for maintaining watchstanding proficiency per step 6.1.1 “The license holder must stand seven complete 8-hour shifts or 5 complete 12-hour shifts per quarter to maintain active status.

SRO Only (see attached flow chart):

The SRO should:

- have knowledge of administrative procedures that specify hierarchy, implementation, an/or coordination of plant normal, abnormal, and emergency procedures..

Technical References:

02-S-01-39, Maintaining Watchstanding Proficiency section 6.1 and Attachment 1

References to be provided to applicants during exam:

None.

Learning Objective: Document learning objective if possible.

GLP-OPS-PROC Obj. 6

Question Source:	Bank	
(note changes; attach parent)	Modified Bank #	
	New	X
Question History:	Last NRC Exam	No
Question Cognitive Level:	Memory/Fundamental	
	Comprehensive/Analysis	X
10CFR Part 55 Content:	55.41(b)…	
	55.43(b)(7)	

Examination Outline Cross-Reference	Level	SRO
Conduct of Operations	Tier #	3
	Group #	
Knowledge of procedures, guidelines, or limitations associated with reactivity management.	K/A #	**2.1.37**
	Rating	4.6

Question 95

Power is to be reduced from 100% to 65% for a control rod sequence exchange.

Who is responsible for reviewing the Reactivity Maneuver Plan and ensuring that the control rod pull sheets are highlighted to emphasize areas of concern?

A. Reactor Engineering

B. Reactivity Management SRO

C. ON-shift Control Room Supervisor

D. ON-shift Operations Shift Manager

Answer: B

Explanation:
02-S-01-27, Operations Philosophy, classifies the described power change as a Type 3 power maneuver per step 6.8.1a(3), which requires staffing an additional SRO, the Reactivity Management SRO (RMSRO). Step 6.8.1b(2) states the RMSRO is responsible for reviewing the Reactivity Maneuver Plan and ensuring that the control rod pull sheets are highlighted to emphasize areas of concern. Step 6.8.2d states the RMSRO is responsible for instructing ROs on the execution of the specific pull sheets.

A is wrong - but, is plausible since Reactor Engineers develop the control rod pull sheets and are involved in during the sequence exchange.

C is wrong - but is plausible since this is an on shift SRO who does not normally have the control room command function and might be considered capable of assuming dedicated reactivity management duties.

D is wrong - but is plausible because Ops Management is present in the control room for management oversight during power reductions for sequence exchanges.

SRO Only (see attached flow chart):

The SRO should:

- have knowledge of administrative procedures that specify hierarchy, implementation, an/or

coordination of plant normal, abnormal, and emergency procedures..		
Technical References: 02-S-01-27, Operations Philosophy		
References to be provided to applicants during exam: None.		
Learning Objective: GLP-OPS-PROC Obj. 4.10		
Question Source:	Bank #710 - 2013 NRC EX	X
(note changes; attach parent)	Modified Bank #	
	New	
Question History:	Last NRC Exam	No
Question Cognitive Level:	Memory/Fundamental	X
	Comprehensive/Analysis	
10CFR Part 55 Content:	55.41(b)(7)…	
	55.43	

Examination Outline Cross-Reference	Level	SRO
Equipment Control	Tier #	3
	Group #	
Knowledge of the process for making changes to procedures	K/A #	2.2.6
	Rating	3.6

Question 96

An On-Shift SRO will review a Temporary Change Notice to ensure _____.

A. the change(s) do not adversely impact current plant operating conditions.

B. if an Emergency Preparedness Review is required.

C. change meets all QA-related aspects prior to implementation.

D. a qualified PADs Preparer is assigned to perform the Process Applicability Determination.

Answer: A

Explanation:

From 01-S-02-9, Procedure Change Process, Rev 001, Section 5.20.5 2, "Ensure the change(s) do not adversely impact current plant operating conditions."

A is correct

B is wrong - This is performed by the Technical Reviewer 5.20.2

C is wrong - This is performed by the PAD Preparer 5.20.3

D is wrong - This is performed by the Supervision 5.20.6

SRO Only (see attached flow chart):

The SRO should:

- have knowledge of administrative procedures that specify hierarchy, implementation, an/or coordination of plant normal, abnormal, and emergency procedures..

Technical References: 01-S-02-9, Procedure Change Process, section 5.20		
References to be provided to applicants during exam: **None.**		
Learning Objective: Document learning objective if possible. GLP-OPS-PROC, Objective 11.2		
Question Source:	Bank #	
(note changes; attach parent)	Modified Bank #	
	New	X
Question History:	Last NRC Exam	NO
Question Cognitive Level:	Memory/Fundamental	X
	Comprehensive/Analysis	
10CFR Part 55 Content:	55.41(b)…	
	55.43(b) (3)	

Examination Outline Cross-Reference	Level	SRO
Equipment Control	Tier #	3
	Group #	
Knowledge of the process for controlling temporary design changes.	K/A #	2.2.11
	Rating	3.3

Question 97

An emergency temporary modification can be implemented in the event of an imminent threat to the safety or reliability of the plant due to an unforeseen plant event:

Which of the following is required?

1) The Shift Manager, with the concurrence of the Engineering Director, or designee, may direct the installation or removal of a Temporary Modification to the plant without approved controlling documentation, as long as the Temporary Modification does not adversely affect nuclear safety.

2) As soon as conditions permit, the Operations Manager and the Systems & Components Manager or their designee shall be verbally notified of the modification and a Condition Report shall be initiated by Maintenance.

3) A Temporary Modification or a permanent Engineering Change shall be completed within 7 calendar days after installation.

4) The Responsible Engineer should coordinate with other Departments (i.e., the Systems & Components Engineer, Operations, Maintenance, Training, Planner and Installer) to ensure they are cognizant of the change and have provided appropriate input.

5) If the Temp Mod is a Comp action, a separate CR will be written by the Shift Manager to track the comp measure.

A. 1, 2 and 3 only.

B. 2, 3 and 4 only

C. 2, 4 and 5 only

D. 1, 3 and 5 only

Answer: D

Explanation:

EN-DC-136, Temporary Modifications, contains this requirement in section 5.3 .

5.3 EMERGENCY TEMPORARY MODIFICATION IMPLEMENTATION

[1] In the event of an imminent threat to the safety or reliability of the plant due to an unforeseen plant event:

(a) The Shift Manager, with the concurrence of the Engineering Director, or designee, may direct the installation or removal of a Temporary Modification to the plant on an "emergency" basis without approved controlling documentation, as long as the Temporary Modification does not adversely affect nuclear safety.

(b) As soon as conditions permit, the Operations Manager and the Systems & Components Manager or their designee shall be verbally notified of the "emergency" modification and a Condition Report shall be initiated by Engineering. The CR issued shall be used to track the installation of the Emergency Temporary Modification. Following installation, removal of the Emergency Temporary Modification shall follow the applicable steps of this procedure.

(c) **IF** the Temporary Modification is also a compensatory measure (operational), **THEN** the Shift Manager will ensure that a Condition Report is issued to track the compensatory measure. This is a separate CR from step 5.3.(1)(b).

(d) A Temporary Modification or a permanent Engineering Change shall be completed within 7 calendar days after installation.

A is wrong - #2 is wrong due to the CR is to be initiated by Engineering not Maintenance, and #5 is also required.

B is wrong - #2 is wrong due to the CR is to be initiated by Engineering not Maintenance, and #4 is incorrect.

C is wrong - #2 is wrong due to the CR is to be initiated by Engineering not Maintenance and #4 is incorrect.

D is correct

SRO Only (see attached flow chart):

The SRO should:

- have knowledge of administrative procedures that specify hierarchy, implementation, an/or coordination of plant normal, abnormal, and emergency procedures..

Technical References:

EN-DC-136, Temporary Modifications

References to be provided to applicants during exam:

None.

Learning Objective:

GLP-OPS-PROC, Objective 40.4

Question Source:	Bank #	
(note changes; attach parent)	Modified Bank #	
	New	X

Question History:	Last NRC Exam	No
Question Cognitive Level:	Memory/Fundamental	X
	Comprehensive/Analysis	
10CFR Part 55 Content:	55.43(b)(3)	

Examination Outline Cross-Reference	Level	SRO
Radiation Control	**Tier #**	3
	Group #	
Ability to control radiation releases.	**K/A #**	**2.3.11**
	Rating	4.3

Question 98

Consider the following processes:

1. Batch release of liquid effluents during normal plant operations
2. Continuous release of liquid radioactive waste
3. Discharge of solid radioactive waste
4. Continuous discharge of gaseous effluents below normal radiological limits during normal plant operations

Which of the above processes are controlled using a Discharge Permit per 01-S-08-11, Radioactive Discharge Controls?

A. 1, only

B. 1 and 2, only

C. 2 and 3, only

D. 4, only

Answer: A
Explanation: The SRO/Shift Manager duties is to review and sign the Batch Release paperwork prior to discharge. This task is only performed by a SRO license holder. See 01-S-08-11. 6.2 Solid waste must not be discharged 6.3 Continuous discharges do not require a discharge permit. 6.4.1 Batch Gaseous Releases, If a condition exists in which the Chemistry manager determines that a batch of gaseous release would have a radiological impact on the environment then a batch permit will be devised. 6.4.2 A batch liquid discharge permit should be completed for all batch liquid releases and will be processed.

A is correct

B is wrong - per Section 6.3, continuous discharges do not require a permit.

C is wrong - per Section 6.3, continuous discharges do not require a permit and per 6.2 Solid waste must not be discharged

D is wrong - per Section 6.3, continuous discharges do not require a discharge permit and 6.4.1 Batch Gaseous Releases, If a condition exists in which the Chemistry manager determines that a batch of gaseous release would have a radiological impact on the environment then a batch permit will be devised.

SRO Only (see attached flow chart):

The SRO should:

- have knowledge of administrative procedures that specify hierarchy, implementation, an/or coordination of plant normal, abnormal, and emergency procedures..

Technical References:

01-S-08-11, Radioactive Discharge Controls

References to be provided to applicants during exam:

None.

Learning Objective: Document learning objective if possible.

GLP-OPS-PROC, OBJ 51.0

Question Source:	Bank # NRC Bank 195	X
(note changes; attach parent)	Modified Bank #	
	New	
Question History:	Last NRC Exam	No
Question Cognitive Level:	Memory/Fundamental	X
	Comprehensive/Analysis	
10CFR Part 55 Content:	55.41(b)(13)	
	55.43(b)(5)	

Examination Outline Cross-Reference	Level	SRO
2.4.37 Knowledge of the lines of authority during implementation of the emergency plan.	Tier #	3
	Group #	
	K/A #	**2.4.37**
	Rating	4.1

Question 99

The site has entered a General Emergency and consideration is being given to evacuating 5 sectors of the 10 mile Emergency Planning Zone (EPZ).

The decision to order an evacuation of these sectors will be made by the…

A. Emergency Director

B. State and Local Agencies

C. Off-Site Emergency Coordinator

D. Radiation Emergency Manager

Answer: B

Explanation:

The SROs are required to maintain Emergency Plan Procedure proficiency, however the ROs are not required. ROs are no longer required to take EPP training such as EPTS-6 that is listed in this question.

The responsibility for deciding to order an evacuation of any EPZ is made by the State and Local Agencies. The site ERO only makes recommendations.

A is wrong - The ED is involved in recommending the evacuation but the decision is with the state and local agencies.

B is correct

C is wrong - The Off-Site EC is consulted during the determination of an evacuation.

D is wrong - The REM is also consulted during the determination of an evacuation

Technical References:

10-S-01-1
10-S-01-12

SRO Only (see attached flow chart):

The SRO should:

- have knowledge of administrative procedures that specify hierarchy, implementation, an/or coordination of plant normal, abnormal, and emergency procedures..

References to be provided to applicants during exam:

None.

Learning Objective:

GLP-EP-EPTS6, Objective 4

Question Source:	Bank # NRC Bank 846	X
(note changes; attach parent)	Modified Bank #	
	New	
Question History:	Last NRC Exam	No
Question Cognitive Level:	Memory/Fundamental	X
	Comprehensive/Analysis	
10CFR Part 55 Content:	55.41(b)(7)	
	55.43	

Examination Outline Cross-Reference	Level	SRO
2.4.42 Knowledge of emergency response facilities.	Tier #	3
	Group #	
	K/A #	**2.4.42**
	Rating	3.8

Question 100

Per 10-S-01-1 (Activation of the Emergency Plan), there is only one type of emergency where the Emergency Director is directed to **not activate** any of the onsite or offsite Emergency Response Facilities (even though an ALERT or higher EAL may have been declared).

What is that type of emergency?

A. Tornado resulting in Visible Damage within the Protected Area

B. Validated notification of an airborne attack threat

C. Armed attack against the plant

D. Validation that an Operating Basis Earthquake has caused major damage to plant vital structures

Answer: C

Explanation:

See 10-S-01-1, section 6.1.8. This section prescribes the ED's responsibilities unique to an "armed attack against the plant". Section 6.1.8.f specifically directs the ED to "not activate…any of the ERFs".

A and B are wrong - but are plausible because they each represent types of emergencies that might indicate the need to potentially shelter personnel (i.e., be concerned for safety).

C is correct

D is wrong - is the strongest distracter in that it may lead to a conclusion of an armed attack on the plant as well. However, per the EALs (i.e., HA1a), an "airborne attack threat" is simply

an airliner less than 30 minutes away from the plant.

SRO Only (see attached flow chart):

The SRO should:

- have knowledge of administrative procedures that specify hierarchy, implementation, an/or coordination of plant normal, abnormal, and emergency procedures..

Technical References:

10-S-01-1, Activation of the Emergency Plan
Emergency Action Levels (Flowcharts)

References to be provided to applicants during exam:

NONE

Learning Objective: Document learning objective if possible.

GLP-EP-EPTS 6 OBJ. 7

Question Source:	Bank # NRC Bank 404	X
(note changes; attach parent)	Modified Bank #	
	New	
Question History:	Last NRC Exam	No
Question Cognitive Level:	Memory/Fundamental	X
	Comprehensive/Analysis	
10CFR Part 55 Content:	55.41(b)…	
	55.43(b)(5)	