**Question #21 (98336) Original Approved Version is as follows:**

A reactor startup is in progress. The RO has just completed pulling Control Rods and is checking nuclear instrumentation. P-6 is NOT lit. The following indications are observed:

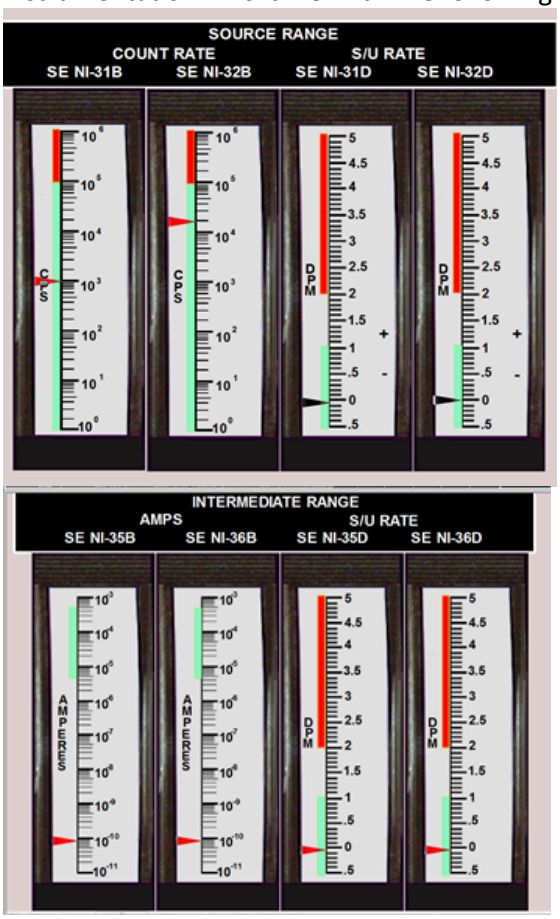


Based on the observed indications above, 1) Which detector is malfunctioning AND 2) Can the startup continue IAW OFN SB-008, INSTRUMENT MALFUNCTIONS?

A. 1) SE N-31
2) NO

B. 1) SE N-32
2) YES

C. 1) SE N-31
2) YES

D. 1) SE N-32
2) NO

Answer: A

**Answer Explanation:**

Proper overlap is SR at ~ $2X10^4$ and IR ~ $1X10^{-10}$.
OFN SB-008, attachment P step P1 after the failed channel is identified P-6 permissive is checked in step P2. If P-6 is not lit then you continue in the procedure. No matter the state of the next components you will get to step P6 which asks if a start-up is in progress so yes then stop the start up in Step P7.

Correct - N-31 is reading too low compared to the others.

Incorrect - N-32 and NO. It is showing proper overlap with both the IR detectors for this power. Plausible if the student doesn't know where the overlap between the SR and IR is. Second part is correct.

Incorrect - N-32 and YES. This overlap is correct based on both of the other IR detectors agreeing with it. Per the OFN the startup must be stopped. Plausible if the student misunderstands overlap and TS for the SR detectors.

Incorrect - N31 and YES. Correct detector but per the OFN the startup must be stopped. Plausible if the student misunderstands that the detector is still needed at this power level per Tech Spec.

Meets the K/A because it asks for ability to determine SR and IR overlap with the malfunction of a SR detector

RO knowledge since this is system knowledge of the Excore Nuclear Instrument System.

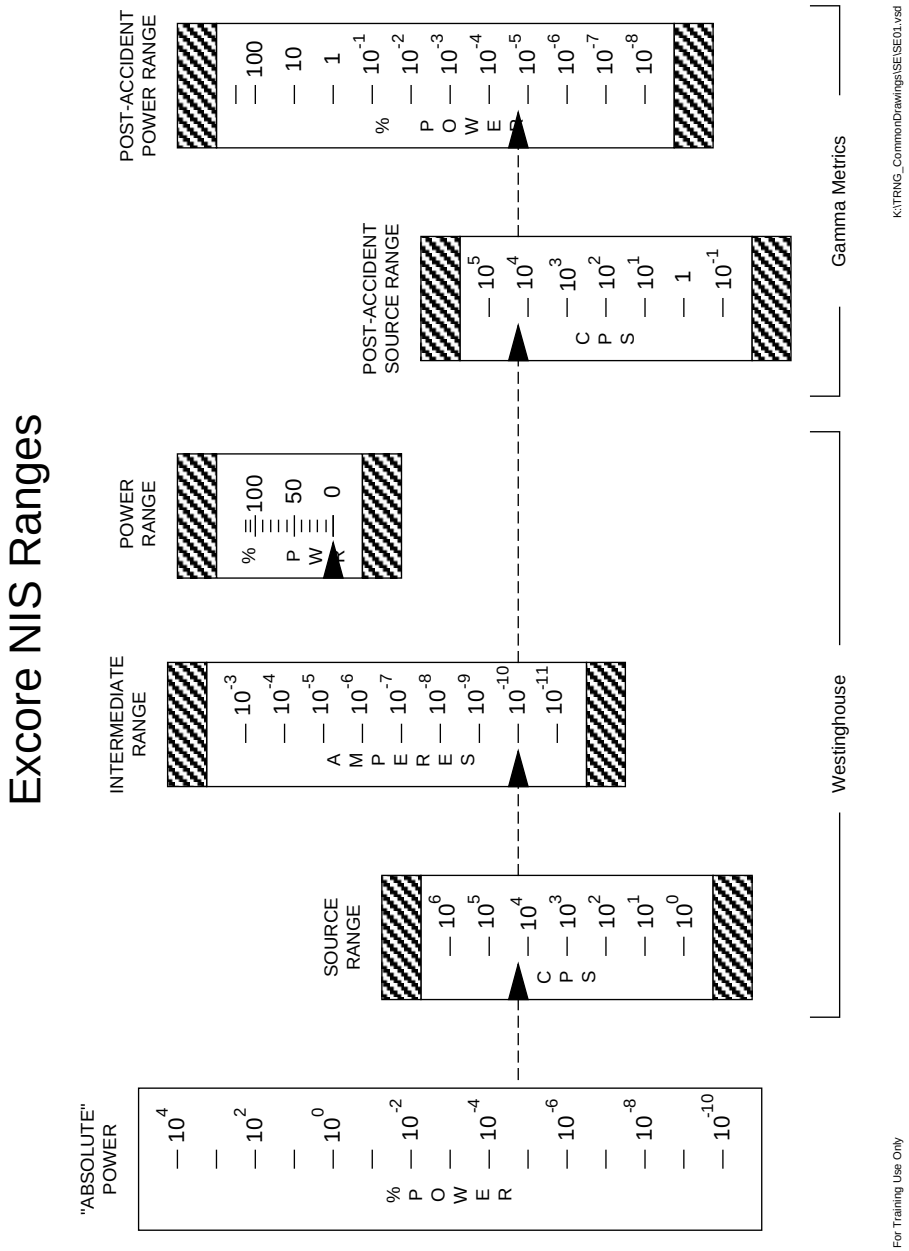


**Analysis:** 3 of 15 students selected 'C.' They recognized SE N-31 was reading low, but incorrectly stated the reactor startup could continue. OFN SB-008, INSTRUMENT MALFUNCTIONS, Attachment P, Step P7 directs stopping startup if in progress. 6 of 15 students selected 'D.' They selected SE N-32 was reading high; failing to recognize that for proper overlap, SE N-31 was reading a decade low, but recognized reactor startup could NOT Continue. The concept of instrument overlap was taught in SY1301501, Excore Nuclear Instrument System, Section 1.2 Detectors. The concept of actions taken for instrument failures was taught in LO1732418, OFN SB-008 INSTRUMENT MALFUNCTIONS, Objective 3. Question is valid and no changes are required. **REMEDIATION:** Discuss the missed exam question concepts during exam review.

**Question #27 (98342), Original approved version is as follows:**

The unit has tripped due to a LOCA and ESF equipment has failed to start.

EMG FR-C2, RESPONSE TO DEGRADED CORE COOLING, has been entered.

As the crew begins Step 15, 'Depressurize all intact S/Gs to 250 psig, the STA reports that a RED path on the Integrity Status Tree exists.

Which one of the following describes the action(s)?

A. Complete the S/G depressurization and then transition to EMG FR-P1, Response to Imminent Pressurized Thermal Shock Conditions, if the red path still exists

B. Stop the S/G depressurization and, if the red path does NOT clear, transition to EMG FR-P1, Response to Imminent Pressurized Thermal Shock Conditions

C. Immediately transition to EMG FR-P1, Response to Imminent Pressurized Thermal Shock Conditions

D. Complete FR-C2 and then transition to EMG FR-P1, Response to Imminent Pressurized Thermal Shock Conditions, if the red path still exists

Answer: D

**Answer Explanation:**

Correct - Because of the SG depressurization, a Red condition on Integrity is expected. If this is not performed and a transition is made then the overall affect would end up being entry into C-1 inadequate core cooling and that is worse than staying in C-2. There is a caution in C2 telling the crew NOT to go to P1 if a red condition exists.

Incorrect - immediately transition to P-1. Plausible if the student misunderstands the direction in the note with respect to the direction in the procedure users guide about higher tear procedures.

Incorrect - stop the SG depressurization. Plausible since the action the operator did caused the red path so if they stop it and the red path clears then they might want to stay. Procedure use and adherence understanding.

Incorrect - complete the SG depressurization. Plausible since the FR procedure directed the action after the action then the student may think a transition now needs to be completed.

Meets KA asks about PTS with regards to cooldown and depressurization using SG at max rate

RO knowledge EMG procedure note basis

**Analysis**: 4 of 15 students selected 'A.' 4 of 15 students selected 'C.' All 8 students missed that the caution step prior to step 15 states the following:

| Revision: 16 | RESPONSE TO DEGRADED CORE COOLING | EMG FR-C2 |
|---|---|---|
| Continuous Use | | Page 24 of 52 |

| STEP | ACTION/EXPECTED RESPONSE | RESPONSE NOT OBTAINED |
|---|---|---|

CAUTION

The following step will cause accumulator injection which may cause a red path condition in the INTEGRITY Status Tree. This procedure shall be completed before transition to EMG FR-P1, RESPONSE TO IMMINENT PRESSURIZED THERMAL SHOCK CONDITIONS.

15. Depressurize All Intact S/Gs
To 250 PSIG:

The concept of EMG FR-C2 procedure navigation was taught in LO1732341, EMG FR-C1/C2/C3, Inadequate/Degraded/Saturated Core Conditions lesson plan, Objectives 8 and 9. Question is valid and no changes are required. **REMEDIATION:** Discuss the missed exam question concepts during exam review.

**Question 28 (98343) Original approved version is as follows:**

The plant is operating at 45% power, steady state when 'A' RCP experiences an Under-Frequency trip due to an electrical fault. The PA buses continue to operate as normal.

Assuming NO Operator actions, which ONE of the following describes the responses for 'A' loop RCS temperatures AND 'A' S/G pressure?

| | Initially (several seconds) | After (one minute or more) |
|---|---|---|
| A. | Thot and Tcold - little change | Thot and Tcold - changing rapidly<br>S/G pressure slightly lower |
| B. | Thot and Tcold - changing rapidly | Thot and Tcold - little change<br>S/G pressure is higher |
| C. | Thot and Tcold - changing rapidly | Thot and Tcold - little change<br>S/G pressure slightly lower |
| D. | Thot and Tcold - little change | Thot and Tcold - changing rapidly<br>S/G pressure is higher |

Answer: A

**Answer Explanation:**

Ran this on the desktop simulator. From the time the RCP trip was inserted the RCS loop temperatures slowly converged toward each other. After the flywheel lost forward inertia the temperature difference rapidly converged and then Thot ended up lower than Tcold because of reverse flow in the loop and the SG still removing some heat (not much). The SG pressures were equal to the other SGs since they are all still connected together but the steam flow from the affected loop went down to near 0. Flow from the other pumps goes up due to the loss of the flow from the affected loop.

Correct - The response of Th and Tc is due to the design coast down of the RCPs which lasts approximately 1-1.5 minutes (30 seconds per TS). Although both temperatures will be lower, Th will lower faster than Tc due to the sudden, significant reduction in heat generated by the reactor going to that SG. SG pressure will be relatively stable

Incorrect - time 0 little change then rapid change and SG pressure higher. The first part is correct. The affected SG is now not producing any power for the turbine so the other SG must make up the loss of steam flow from this loop so overall pressure is lower not higher. Plausible if the student thinks that the loss of steam flow is because the pressure is higher.

Incorrect - time 0 rapid change then Th and Tc equal and SG pressure same. The SG pressure is correct. Plausible if the student forgets about the flywheel effect on the RCS indications.

Incorrect - time 0 rapid change then Th and Tc equal and SG pressure higher. Plausible if the student forgets about the flywheels effect on the RCS indications. Also the affected SG is now not producing any power for the turbine so the other SG must make up the loss of steam flow from this loop so overall pressure is lower not higher. Plausible if the student thinks that the loss of steam flow is because the pressure is higher.

Meets the KA because it asks for RCS parameters after a loss of an RCP (coastdown with the flywheel)

RO knowledge since this is system understanding of how the flywheel on the RCP will affect the other RCS indications after the loss of the pump

**Analysis:** 11 of 15 students selected 'C.' They missed the concept that the RCP flywheel will maintain RCS flow initially and then Temperature Parameters will eventually change rapidly as the RCP coasts down to a stop and RCS flow reverses through the loop. The concept of RCP flywheel was taught in SY1300300, Reactor Coolant Pumps Lesson Plan, Objective 3, sections 3.1 Motor Assembly and 3.1.3 Flywheel. Question is valid and no change is required. **REMEDIATION:** Discuss the missed exam question concepts during exam review.

**Question #39 (98354), Original Approved version is as follows:**
***question was modified on the white board during the exam by striking out the word 'output'**

The unit is operating at 100%. The 'B' Cavity Cooling fan was running but its ~~output~~ breaker trips and will NOT reset.

Which of the following is the correct response to this event AND why?

The 'A' Cavity Cooling fan...

A. auto starts to provide cooling to the incore instrumentation vessel connections.

B. must be manually started to provide cooling to the incore instrumentation vessel connections.

C. must be manually started to provide cooling to the excore NIs to prevent possible damage due to high temperatures.

D. auto starts to provide cooling to the excore NIs to prevent possible damage due to high temperatures.

Answer: D

**Answer Explanation:**

SY1302600

Correct - a loss of power to the running fan will auto start the other fan. One of the functions of these fans is to cool the excore NI detectors to a max of 135F. This allows them to operate properly and give reliable indications. As stated in the NI LP if temperature gets too high for the detectors they will not provide accurate indication.

Incorrect - Auto start and cool the instrument vessel connections. The first part is correct it will auto start. The instrument vessel connections are on top of the head and not cooled by the cavity cooling fans. Plausible if the student confuses where the fans discharge to.

Incorrect - manual start and cools excore NIs. The fans will auto start on a loss of power, that is all that will auto start them. A failure of the running fan will not start its counterpart. The second part is correct. Plausible if the student remembers that the fans don't start on a malfunction of the fan but forgets that loss of power is not a malfunction of the fan.

Incorrect - manual start and cools instrument vessel connections. The fans will auto start on a loss of power, that is all that will auto start them. A failure of the running fan will not start its counterpart. The instrument vessel connections are on top of the head and not cooled by the cavity cooling fans. Plausible if the student forgets what starts the fans and where they discharge to.

Meets the KA by asking what the RO monitors from the control room, cooling fan, and what is the expected response to the plant, the other should auto start.

RO knowledge based on system understanding

**Analysis:** 8 of 15 students selected 'C.' They missed the concept that a loss of power to the running fan will auto start the other fan. All 8 students stated the fan must be manually started. The concept of Cavity Cooling Fan operation was taught in SY1302600, Containment Spray and Cooling Systems, section 9.3, CAVITY COOLING FANS. Question is valid and no change is required. **REMEDIATION:** Discuss the missed exam question concepts during exam review.

**Question #57 (98372), Original approved version is as follows:**
The unit is operating at 100% when the upper selected PZR level channel fails to 0%.

Assuming NO Operator action, which ONE of the following is an expected plant response to this failure?

A. Actual PZR level lowers

B. PZR spray valves will open

C. ALR 033E, PZR HTR GROUP LOCKOUT, will alarm

D. PZR backup heaters will energize

Answer: B

**Answer Explanation:**

M-744-0028

Correct - With this failure letdown isolates and charging goes to max so no water out and more water in will raise pressure in the PZR. Heaters are off due to letdown isolation at 17% (failed channel low) so this is not adding to the pressure rise. Sprays open to lower pressure but will not lower pressure back to 2235 psig.

Incorrect - ALR 033E. This alarm will come in if any PZR heater breaker is tripped open. Since the failed channel failed low the breakers are not tripped but locked out from coming on. Plausible if student confuses how the PZR heaters operate under these conditions.

Incorrect - PZR backup heaters energize. These heaters are controlled by the upper selected channel so when it fails low they backup heaters are lock out from coming on. Plausible since actual level will rise and be greater than 5% above program which should have turned them on baring the failure.

Incorrect - PZR level lowers. This would happen if the level channel had failed HI. Plausible if the student confuses the different failure modes, when letdown isolates then charging should lower to keep from over filling the PZR.

Meets KA by asking how PZR level failure affects PZR pressure control system

RO knowledge system understanding

| Revision: 8 | PZR HTR GROUP LOCKOUT | ALR 00-033E |
|---|---|---|
| Continuous Use | | Page 1 of 2 |

1.0 **PURPOSE**

1.1 This procedure provides instructions for responding to actuation of alarm window 00-033E, PZR HTR GROUP LOCKOUT.

2.0 **SYMPTOMS OR ENTRY CONDITIONS**

2.1 This procedure is entered when any pressurizer heater group 480V supply breaker has tripped on overcurrent (relay 86X/FTS).

* PG2101 for Backup Heater Group A
* PG2201 for Backup Heater Group B
* PG2401 for Variable Heater Group C

**Analysis**: 9 of 15 students selected 'C.' ALR 00-033E will only annunciate when any PZR Heater supply breaker has tripped on overcurrent. This condition is not met when upper selected controlling PZR level channel fails low. Heaters de-energize, but do NOT trip on overcurrent. The concept of expected plant response for instrument failures was taught in SY1301000, Pressurizer Pressure and Level Control System lesson plan, Objective 10. Also taught in LO1732418, OFN SB-008 INSTRUMENT MALFUNCTIONS Lesson Plans, Objective 4. Question is valid and no changes are required. **REMEDIATION:** Discuss the missed exam question concept during exam review.

**Question #65 (98380), Original approved version is as follows:**

What type of fire detection device detects the presence of abnormal heat AND where are they most widely used at Wolf Creek?

A. Infrared Flame detector, in the EDG rooms.

B. Ionization detectors, in the Turbine Building.

C. Protectowire Linear Detectors, in Containment.

D. Photoelectric Smoke detector, in areas of higher radiation levels.

Answer: C

**Answer Explanation:**

Correct - Protectowire. Detects temperature in a given location based on melting of the plastic coating separating the wires. This is used only in containment.

Incorrect - Photoelectric. Detects smoke (something to block light). Plausible as this is a device used in plant to detect fire but it doesn't look for hi temperature

Incorrect - Infrared flame. Detects light emitted by a flame. Plausible as this is a device used in plant to detect fire but it doesn't look for hi temperature

Incorrect - Ionization. This detector that detects combustion products in the air (particles from material that have burned). This detects fire before smoke and flame is present. Plausible as this is a device used in the plant to detect fire but it doesn't look for hi temperature.

Meets KA asks about detection devices

RO knowledge system design understanding

**Analysis:** 8 of 15 students selected 'A' - Infrared Flame detector. 1 of 15 students selected 'B' - Ionization detectors and 1 of 15 students selected 'D' – Photoelectric smoke detector. Fire protection detector type concept was taught in SY1408600, Fire Protection and Detection System Lesson Plan, Objective 3. With 10 of 15 students missing the question, a weakness in fire protection, specifically types of detectors available is noted as a weakness. The question is valid and no changes are required. **REMEDIATION:** Discuss the missed exam question concept during exam review and provide Pages 39-43 of SY1408600 lesson plan as a handout. (See pages 13-17 below)

## *3.3 FIRE AND SMOKE DETECTION SYSTEM*

### *General Description*

The basic fire detection system incorporates a main control annunciation panel (KC-008), four (4) Alarm Control Units (KC-273, KC-274, KC-275, KC-324), local control panels, detection circuits and initiating devices located throughout the power block and site related structures. In the power block, local control panels and detection circuits' interface with three of the four Alarm Control Units, which in turn transmit signals to KC-008. The fourth Alarm Control Unit, KC-324, is dedicated to site related signals, and interfaces with KC-008.

KC-101 is a parallel panel that duplicates KC-008. It is installed in the I & C shop and is used by I&C to perform most of the fire protection testing. It is interconnected to all four Alarm Control Units just as is KC-008.

To provide a reliable detection system, fire and smoke detection circuitry must be constantly supervised to locate any faults in the system. All detection circuits incorporate an end-of-line device, usually a resistor or capacitor, to provide a small current that can be monitored by the local control panels.

The following types of initiating devices are used in the Fire Protection System to detect fire hazards:

1. Ionization smoke detectors
2. Photoelectric smoke detectors
3. Infrared flame detectors
4. Linear heat detectors (Protectowire)
5. Rate compensation thermal detectors
6. Manual fire alarm stations

Cooling fans have been added to panels KC273, KC275 and KC324 to counteract an increase in card failures and general software glitches and system lockups due to high ambient temperatures.

### *Component Description*

#### *KC008 Main Control Panel*

The KC-008 panel, located in the Control Room, contains a Network Display Unit (NDU) (mini-computer), which is the center of all information flow for the Fire Protection System. From this panel, Control Room operators can monitor the entire Fire Protection System, acknowledge any alarms in the system, and control the diesel and motor driven fire pumps and motor controller. The unit continually gathers and processes information from the Alarm Control Units as it functions to monitor and control the entire Fire Protection System. As it performs its monitoring functions, KC–008 provides trouble and alarm indications in the Control Room. KC-008 also incorporates equipment to produce the system's audible and visual alarms in the Control Room.

*Alarm Control Units*

Alarm Control Units provide alarm, equipment status, and flow information in the main control annunciation panel KC-008.

The four Alarm Control Units contain the system's 37 transmitter/receivers (T/R), which communicate with KC-008 through a double pair of wires. Some T/Rs are equipped with remote control function capability for silencing alarms, and some have local annunciators. Three Alarm Control Units, KC-273, KC-274, and KC-275, have internal control modules to monitor ionization, flame, or thermal detector circuits. Panel KC-274 has an additional internal control panel to operate linear heat detectors used for cable tray protection inside Containment. Panel KC-324 receives signals generated from site related systems outside the power block.

Zone alarm and trouble signals are transmitted to the Alarm Control Units either directly or through supplementary relays provided in local control panels. Signals received by the Alarm Control Units are then transmitted to Panel KC–008. Refer to **Figure 15: Alarm Control Unit Locations**.

*Local Control Panels*

Local control panels are located throughout the power block and site related structures. These panels function to communicate detection circuitry signals to system Alarm Control Units, actuate local area alarms, and allow operator control of detection system functions in the plant. Local panels are hardwired to remote detectors and the system Alarm Control Units. In addition, depending on the suppression system they support the panels may also be wired to the following components:

- Manual Pull Stations
- System Discharge (Deluge) Valves
- Fire Loop Isolation Valves
- Alarm bells or horns
- Equipment Trips

*Ionization Detectors*

Ionization detectors detect early combustion products. They can detect a fire before it has progressed to a stage where significant heat and visible smoke are generated. Because of this, ionization detectors are preferred for locations where an electrical fire is the expected hazard due to the smoldering period that normally precedes an outbreak of flames. However, ionization detectors are sensitive to ionizing radiation, and therefore are suitable only for use where radiation levels are less than 7.5 mRem per hour.

The ionization detector features an alpha radiation source, two ionization chambers, and a highly sensitive semiconductor amplifier-switching circuit. The detector operates on the ionization principle and is supplied with a line voltage of 22 VDC. One chamber detects the presence of combustion products ionized by the radiation source creating an electrical imbalance in the detector while the other chamber functions as a reference to stabilize the detector for changes in environmental temperature, humidity, and pressure.

At WCGS, ionization detectors are the most widely used detection devices providing reliable early stage fire detection for both power block and site related structures.

*Thermal Detectors*

The thermal detector of the type installed throughout various plant areas is a combination fixed temperature and rate-of-rise heat detector. It is designed for use in large open areas not subject to rapid temperature fluctuations as a means of initiating a signal in response to abnormal heat conditions.

The detector operates to detect ambient temperatures increasing at a rate of 15°F per minute, or a sustained high temperature. The rate-of-rise detector element consists of an air chamber, a flexible metal diaphragm, and a moisture proof vent. The fixed temperature element consists of a phosphor bronze spring held under tension by a fusible link. When ambient air temperature rises at a rate exceeding 15°F per minute, the air in the chamber expands faster than it can be vented, causing the flexible metal diaphragm

to extend and close an electrical contact. If there is a sustained high temperature exceeding a set temperature, the fusible link of the fixed temperature element will melt releasing the spring and closing the electrical contact.

Thermal detectors are used extensively throughout power block structures and site related buildings.

*Photoelectric Smoke Detectors*

Photoelectric smoke detectors employ a photoelectric cell coupled with a specific light source to detect smoke. The photoelectric detector reacts to visible smoke particles. The only way light can reach the photocell is by the light scattering caused by particles in the air. When the amount of light sensed by the photocell reaches a preset threshold, an electric current is initiated to activate an alarm circuit.

The detector is not sensitive to ionizing radiation, and is used in place of ionization detectors in radiation areas exceeding 7.5 mRem per hour. Photoelectric detectors also protect areas housing combustible materials that rapidly produce dense visible smoke. At WCGS, photoelectric detectors are used in limited applications.

*Infrared Flame Detectors*

The infrared flame detector responds to infrared light emitted by a flame. Infrared detectors operate best when located at a distance from the possible source of ignition, and are used in areas where the fire hazard emits a bright flame, such as from flammable liquids or combustible gases. The detector contains a solar cell and a light-filtering lens. A time delay is incorporated in the detector to prevent activation as a result of non-fire infrared radiation. A sustained infrared radiation signal of 5 to 20 seconds is required to activate the detector and initiate an alarm signal. At WCGS, infrared flame detectors are installed in the Emergency Diesel Generator Rooms, the Auxiliary Boiler Room, the Main Steam Enclosure, the Boric Acid Tank Rooms, and the Fuel Building.

*Protectowire Linear Heat Detectors*

The Protectowire Linear Heat Detector System is a thermally actuated protection system used to detect cable tray fire hazards inside Containment. The linear detectors respond to a temperature rise in the cable trays, and initiate an alarm signal at a temperature of approximately 190°F. The detector is comprised of two actuators individually encased in a heat sensitive material. The encased actuators are twisted together to impose a

spring pressure between them, and then they are spirally wrapped with a protective tape and finished with an outer covering to suit the environment.

A power source is connected to one end of the actuators causing a small monitoring current to flow continuously through the detector and supervisory circuit. At the critical or operating temperature, the heat sensitive material yields to the pressure on it, permitting the actuators to move into contact with each other. This action takes place at the first heated point anywhere along the detector. The heat does not have to result from open flame, nor produce any specified density of smoke, nor increase at any particular rate. Heat alone causes the alarm signal.

*Manual Pull Stations*

Manual pull stations are provided throughout the power block and site facilities. They can be used to initiate an alarm or initiate an alarm and emergency operation of automatic fire protection suppression systems.

Manual pull stations, when activated, transmit a signal to the system local control panel or Alarm Control Unit, as appropriate, to initiate a system discharge or provide Control Room alarm.

**SRO-Only Question #76 (98391) Original approved question is as follows:**

The unit was at 100% power and stable when the following indications are observed:

- RCS pressure Down fast
- SI Auto actuated
- RCS temperature Down fast
- PZR level Down fast
- Containment pressure Up slow
- Containment humidity Up slow
- S/G pressures Down slow
- NPIS Indicates ORANGE path for Integrity

1. What event is in progress?
2. Which procedure will mitigate this event?

A. 1.Large Break LOCA
2.EMG FR-P1, RESPONSE TO IMMINENT PRESSURIZED THERMAL SHOCK CONDITIONS

B. 1.Main Steam Line Break
2.EMG E-2, FAULTED STEAM GENERATOR ISOLATION

C. 1.Main Steam Line Break
2.EMG FR-P1, RESPONSE TO IMMINENT PRESSURIZED THERMAL SHOCK CONDITIONS

D. 1.Large Break LOCA
2.EMG E-1, LOSS OF REACTOR OR SECONDARY COOLANT

Answer: D

**Answer Explanation:**

Correct - With a LOCA vs a MSLB the diagnosis difference is RCS temperature lowering without a concurrent SG pressure decrease in parallel. This event will cause RCS temperature to lower faster than the 100F/hour which per EMG F-0 will send you down the path to FR-P1 (red or orange). FR-P1 at step 1 will have the crew return to procedure step in effect per the RNO with RHR flow greater than 1000 gpm. RHR flow during a LBLOCA is expected to exceed this flow rate.

Incorrect - LBLOCA and FR-P1. The diagnosis is correct (see above). The P-1 procedure (red path) will be indicated on the plant computer and when F-0 is performed. This procedure step 1 asks about RCS pressure and with a LBLOCA this would be no so the RNO will ask about RHR pump flow. Since the stem states that SI has actuated this answer will be yes to greater than 1000 gpm. This will send you back to where you came from. This could be either E-0 or E-1 depends on how long the crew takes to perform actions. Plausible as this procedure will be entered but not performed so it will not mitigate the event.

Incorrect - MSLB and FR-P1. A steam line break will cause all of the given indications except for RCS temperature and SG pressure staying high (lowering slow). Plausible as all the other indications given support this conclusion. The P-1 procedure (red path) will be indicated on the plant computer and when F-0 is performed. This procedure step 1 asks about RCS pressure and with a LBLOCA this would be no so the RNO will ask about RHR pump flow. Since the stem states that SI has actuated this answer will be yes to greater than 1000 gpm. This will send you back to where you came from. This could be either E-0 or E-1 depends on how long the crew takes to perform actions. Plausible as this procedure will be entered but not performed so it will not mitigate the event.

Incorrect - MSLB and E-2. A steam line break will cause all of the given indications except for RCS temperature and SG pressure staying high (lowering slow). Plausible as all the other indications given support this conclusion. This procedure would be the correct procedure to enter if this event were a steam line break and would mitigate this event. Plausible if the student misdiagnosis the event and then knows which procedure will correct the steam line issue.

Meets KA asks for ability to interpret differences in overcooling (steam break) and LOCA (loss of coolant only)

SRO knowledge because knowledge of procedure strategy for mitigating a LOCA. Detailed knowledge of P-1 steps is required.

**Analysis:** 5 of 7 students selected 'C' "1. Main Steam Line Break 2. EMG FR-P1, RESPONSE TO IMMINENT PRESSURIZED THERMAL SHOCK CONDITIONS" while 1 of 7 students selected 'B' "1. Main Steam Line Break 2. EMG E-2, FAULTED STEAM GENERATOR ISOLATION.' With all 6 students missing the question, diagnosing the differences between Large Break LOCA and Steam Line Break is a noted weakness. Diagnosing events was taught in LO1610500, Integrated Plant Diagnostics Lesson Plan, Objective 3. The question is valid and no changes are required, however providing a CTMT radiation value might enhance the question for future use. **REMEDIATION:** Discuss the missed exam question concept during exam review. NOTE – SRO students will receive Post-License Shift Technical Advisor Diagnosis Training to further improve event diagnosis before on-shift assignment.

**SRO-ONLY Question #79 (98394) Original approved version is as follows:**

Given the following with the plant at 100% power:

- Fuse disconnect NK0311, Feeder to NN13 from NK03 opened
- A loss of bus NN03 occurred
- The crew stabilized the plant
- NN03 is now energized from NN15 on the bypass transformer via the static switch

Based on the information given:

1. What procedure will the crew perform to correct this issue?
2. What is the OPERABILITY status of NN15 Inverter?

A. 1. OFN NK-020, LOSS OF VITAL 125 VDC BUS NK01, NK02, NK03 AND NK04
   2. OPERABLE

B. 1. OFN NN-021, LOSS OF VITAL 120 VAC INSTRUMENT BUS
   2. OPERABLE

C. 1. OFN NK-020, LOSS OF VITAL 125 VDC BUS NK01, NK02, NK03 AND NK04
   2. INOPERABLE

D. 1. OFN NN-021, LOSS OF VITAL 120 VAC INSTRUMENT BUS
   2. INOPERABLE

Answer: D

Answer Explanation:

Additional references - STS NB-005,

We have new instrument inverters. The swing inverters can be powered from an NK (DC) source or NG (AC) source and per TS any inverter suppling an NN bus must be powered from an NK source.

Correct - Since the statement in the stem for the power source to NN15 (bypass transformer) which is NG01, this is not considered an operable line up for the instrument buses in this mode. The procedure selected to correct the event will be OFN NN-021 since the issue currently is the loss of the NN bus even though the cause was an NK breaker the restoration will be from the NN procedure.

Incorrect - OFN NK-020, inoperable. This procedure is plausible since it does cover issues dealing with the NK, safeguards batteries. The stem states that a loss of power from the NK source happened so the NN was lost due to the loss of the NK. The OFN NK only deals with actual battery issues not the fuse disconnects on the busses. The inoperable part is correct.

Incorrect - OFN NN-021, operable. Correct procedure. NN15 on the bypass transformer is not operable as the power supply currently is NG01 and not an NK source per TS. Plausible if the student is not familiar with the power supplies to the swing NN inverters and thinks this lineup is OK per TS.

Incorrect - OFN NK-020, operable. This procedure is plausible since it does cover issues dealing with the NK, safeguards batteries. The stem states that a loss of power from the NK source happened so the NN was lost due to the loss of the NK. The OFN NK only deals with actual battery issues not the fuse disconnects on the busses. Also the stem states NN15 is powered from the bypass transformer. Plausible if the student is not familiar with the power supplies to the swing NN inverters and thinks this lineup is OK per TS. Since there is two power supplies to the swing inverters the student must know which one is correct to satisfy TS

Meets the K/A asks for entry conditions for abnormal operating procedures for the instrument buses SRO knowledge operability calls are SRO job function

**Analysis:** 3 of 7 students selected 'B' "1. OFN NN-021, LOSS OF VITAL 120 VAC INSTRUMENT BUS 2. OPERABLE" – Right procedure but missed the OPERABILITY determination. 1 of 7 students selected 'C' "1. OFN NK-020, LOSS OF VITAL 125 VDC BUS NK01, NK02, NK03 AND NK04 2. INOPERABLE" – Wrong procedure, but right OPERABILITY determination. Students were taught applicable Technical Specifications in SY1506300, DC and Instrument Power, Class 1E, Lesson Plan, Objective 5. Students were taught procedure entry condition concepts in LO1732430, OFN NN-021, LOSS OF VITAL 120 VAC INSTRUMENT BUS Lesson Plan, Objective 1. Question is valid and no changes are required.
**REMEDIATION:** Discuss the missed exam question concept during exam review.
See Figure 1 from OFN NN-021 below:

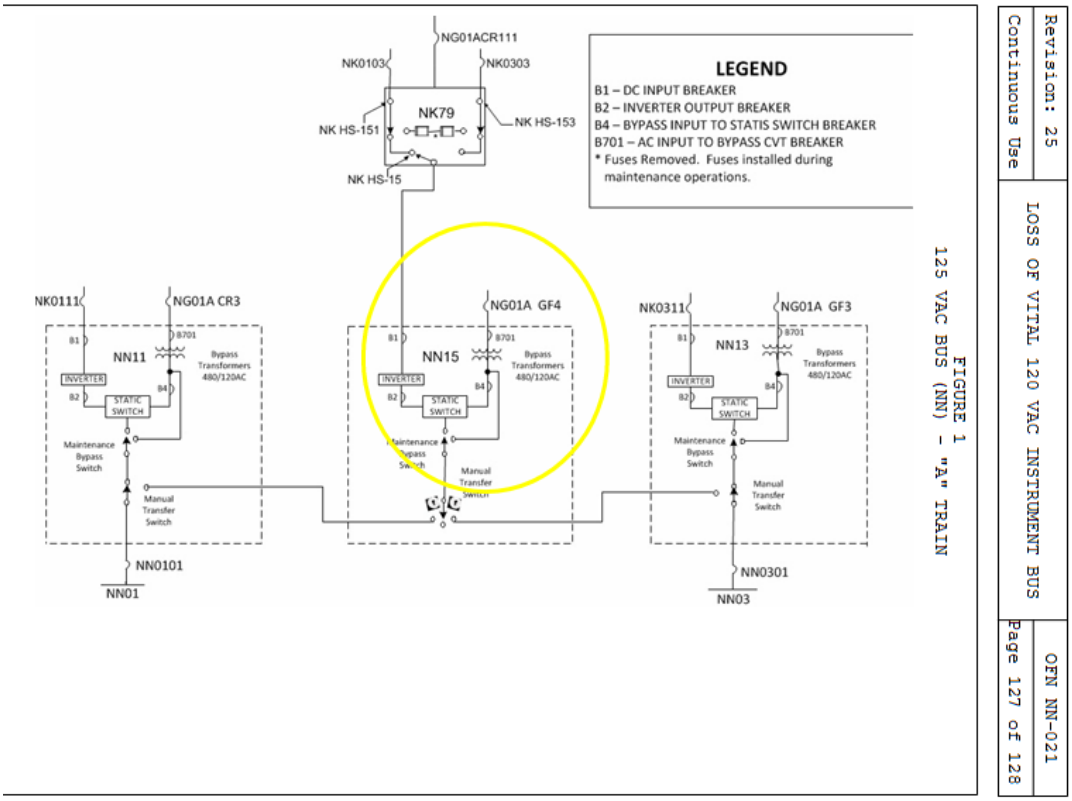

**SRO ONLY – Question #91 (98406) Original approved version is as follows:**

Given the following:

- Reactor power is 85%
- Main Control Board Annunciator 080B, RPI NON URG ALARM, is received
- DRPI indicates Data A failure 1,2,3 AND GW for ALL rods

1) What is the status of the DRPI system AND
2) What is the current accuracy of the system?

A. 1) OPERABLE
2) +10/-4

B. 1) OPERABLE
2) -10/+4

C. 1) INOPERABLE
2) +10/-4

D. 1) INOPERABLE
2) -10/+4

Answer: A

**Answer Explanation:**
The references for this question are ALR 080B, LCO 3.1.7 and Basis for LCO 3.1.7 which state the DRPI system is considered operable at half accuracy. I&C will be called to correct the issue but no other plant actions are required by the crew.

Correct - With the given failure per Tech Spec the DRPI system goes to half accuracy which is still within the ± 12 steps the LCO asks for. The DRPI system remains OPERABLE.

Incorrect - OPERABLE -10/+4. Correct Tech Spec call. The accuracy is +10/-4 (opposite common mistake). Plausible if the student confuses the accuracy but knows the Tech Spec.

Incorrect - INOPERABLE +10/-4. Accuracy is correct and with the given failure of one DRPI then the panel will show alarms and lights. Plausible if the student knows the accuracy for the power failure but applies LCO wrong (common misconception) for only having one power supply available.

Incorrect - INOPERABLE -10/+4. Common misconception for accuracy. Plausible if the student applies the Tech Spec wrong with the given power failure.

Meets KA asks ability to use plant procedures (Tech Specs and ALR 080B) to control the loss of RPIS power.
SRO knowledge operability determinations are SRO only job function

**Analysis:** 3 of 7 students selected 'C' –" 1) INOPERABLE, 2) +10/-4" – Right accuracy, but wrong OPERABILITY determination. 1 of 7 students selected 'B' "1) OPERABLE 2) -10/+4" – wrong accuracy, but right OPERABILITY determination. The students were taught applicable technical specifications and detector 'half accuracy' in SY1301400, Rod Position Indication System Lesson Plan, Objectives 8 and 4. Question is valid and no changes are required. **REMEDIATION:** Discuss the missed exam question concept during exam review.

WC-2015-11

Memo to File

Subj: Post-Examination Analysis and Comments

1. Post-examination submittal was not sent with a cover letter.