REGISTRY OF RADIOACTIVE SEALED SOURCES AND DEVICES
SAFETY EVALUATION OF DEVICE
(AMENDED IN ITS ENTIRETY)

NO.: NR-0210-D-102-E DATE: January 28, 2016 PAGE: 1 OF 5

DEVICE TYPE: Gun Sights

MODEL: AF Series, **CAMM-SA Series**

MANUFACTURER/DISTRIBUTOR:	Cammenga and Associates, LLC 2011 Bailey Street Dearborn, MI 48124
SEALED SOURCE MODEL DESIGNATION:	mb-microtec USA, Inc. Model: 400/1 **mb-microtec USA, Inc. Model: 400/3 (only CAMM-SA Series)**

ISOTOPE:	MAXIMUM ACTIVITY:
Hydrogen-3	60 mCi (2.22 GBq) Rear sight
Hydrogen-3	30 mCi (1.11 GBq) Front Sight
Hydrogen-3	**200 mCi (7.4 GBq) Front Sight CAMM-SA Series**

LEAK TEST FREQUENCY:	Not Required
PRINCIPAL USE:	(W) Self Luminous Applications
CUSTOM DEVICE:	_____ YES __X__ NO

REGISTRY OF RADIOACTIVE SEALED SOURCES AND DEVICES
SAFETY EVALUATION OF DEVICE
(AMENDED IN ITS ENTIRETY)

DEVICE TYPE: Gun Sights

DESCRIPTION:

The AF Series gun sights are constructed with the materials listed in Table 1 and are designed to hold tritium (H-3) glass vials manufactured by mb-microtec USA, Inc. with Model number 400/1. The overall dimensions of the gun sights in the AF Series are listed in Table 2. The minimum material around the sources is 0.30 mm.

The AF Series Front sights contain one tritium source and the rear sights contain two tritium sources. Attachment 1 and 2 contain a representation of the AF Series.

Table 1: AF Series Materials of Construction

Materials	Rockwell Hardness Scale Specification Values
Carbon Steel Alloy	54-60
Stainless Steel Alloy	75-88
Titanium Alloy	75-80

Table 2: Dimensions of the AF Series

Dimensions	Front Sights		Rear Sights	
	Max.(mm)	Min.(mm)	Max.(mm)	Min.(mm)
Length	19	5	40	6
Width	16	2	25	8
Height	60	5	18	6

The CAMM-SA Series front gun sights are constructed of aluminum, steel and titanium with a minimum Rockwell Hardness of 35, 54, 75 similar to those listed in Table 1 and are designed to hold tritium (H-3) glass vials manufactured by mb-microtec USA, Inc. with Model numbers 400/1 and 400/3.

DEVICE TYPE: Gun Sights

DESCRIPTION (Cont.):

The CAMM-SA Series model CAM1015FS is constructed of Polycarbonate and has gone through additional prototype testing that demonstrate that it will stand normal and likely conditions of use. The overall dimensions of the gun sights in the CAMM-SA Series are shown in the Attachments. The minimum material around the sources is 0.30 mm.

The CAMM-SA Series Front sights contain one tritium source. The CAMM-SA Series is distributed in a set but only the front sights will contain tritium glass vial.

The gun sights are designed to withstand the conditions that may be experienced during the normal and severe conditions of handling, storage, and use. The borosilicate glass vials containing tritium gas are protected by a permanent aluminum outer sleeve. The glass vials are then secured in the machined cavities of the gun sight body with non-corrosive silicone glue.

The manufacturer stated that the expected working life for the gun sights is 10 years.

The **AF Series** gun sights are laser engraved, etched, stamped, machined, molded, or casted on the lateral surface of the gun sight and contains the appropriate information in accordance with the labeling requirements in 10 CFR 32.25(b). The label contains the following information:

- "Snake Eyes": The words Snake Eyes represents the gun sights branding name and is located on the side of the gun sights.

- "DH3", "DR-H3", "DRH3", "H3": The marking "DH3", "DR-H3", "DRH3"or "H3" is located on the side of the sights to indicate the presence of tritium (H-3).

DEVICE TYPE: Gun Sights

DESCRIPTION (Cont.):

- "21-26460-03E", "CAMMENGA": The exempt distribution license number 21-26460-03E or the word "CAMMENGA" (Cammenga and Associates LLC's trademarked logo) is located on the underside of every sight to identify the distributor. This marking is not visible when the sights are mounted on a firearm.

The CAMM-SA Series with metal bodies will be labeled with laser engraving/etching and the gun sights with polycarbonate bodies will be marked by pad printing with double print application only.

For CAMM-SA Series

- **The marking "CA-H3" is located on the side of the sights to indicate the presence of tritium (H-3).**

- **"21-26460-03E", "CAMMENGA": The exempt distribution license number 21-26460-03E or the word "CAMMENGA" (Cammenga and Associates LLC's trademarked logo) is located on the underside of every sight to identify the distributor. This marking may be not visible when the sights are mounted on a firearm.**

Cammenga and Associates, LLC has submitted a quality assurance and control (QA/QC) program that has been found to be acceptable by NRC for production and distribution of AF Series gun sights. A copy of this program is on file with the NRC.

Based on our review of the information and test data provided by the manufacturer, the NRC concludes that Cammenga and Associates LLC's AF Series and **CAMM-SA Series** gun sights meet the safety criteria set forth in 10 CFR 32.23. Therefore, the NRC concludes that the AF Series and **CAMM-SA Series** gun sights are acceptable for exempt distribution.

REGISTRY OF RADIOACTIVE SEALED SOURCES AND DEVICES
SAFETY EVALUATION OF DEVICE
(AMENDED IN ITS ENTIRETY)

NO.: NR-0210-D-102-E DATE: January 28, 2016 PAGE: 5 OF 5

DEVICE TYPE: Gun Sights

REFERENCES:

The following supporting documents for the AF Series and **CAMM-SA Series** gun sights are hereby incorporated by reference and are made part of this registry document.

- Cammenga and Associates, LLC's application letter dated July 10, 2014 with enclosures thereto.

- Cammenga and Associates, LLC's letters dated October 9, 2014, with enclosures thereto.

- Cammenga and Associates, LLC's e-mail dated October 30, 2014, with enclosures thereto.

- Cammenga and Associates, LLC's letters dated May 5, 2015 (ML15133A417), August 19, 2015 (ML15232A165), October 7, 2015 (ML15281A014), and October 26, 2015 (ML15300A134) with enclosures thereto.

- **Cammenga and Associates, LLC's letters dated August 8, 2015 (ML15224B352), November 24, 2015 (ML15351A414), December 22, 2015 (ML15356A756) and e-mail dated January 4, 2016 (ML16004A332) with enclosures thereto.**

ISSUING AGENCY:

U.S. Nuclear Regulatory Commission

Date: January 28, 2016 Reviewer: **/RA/**
Lymari Sepulveda

Date: January 28, 2016 Reviewer: **/RA/**
Tomas Herrera

REGISTRY OF RADIOACTIVE SEALED SOURCES AND DEVICES
SAFETY EVALUATION OF DEVICE
(AMENDED IN ITS ENTIRETY)

NO.: NR-0210-D-102-E DATE: January 28, 2016 ATTACHMENT: 1 OF 5

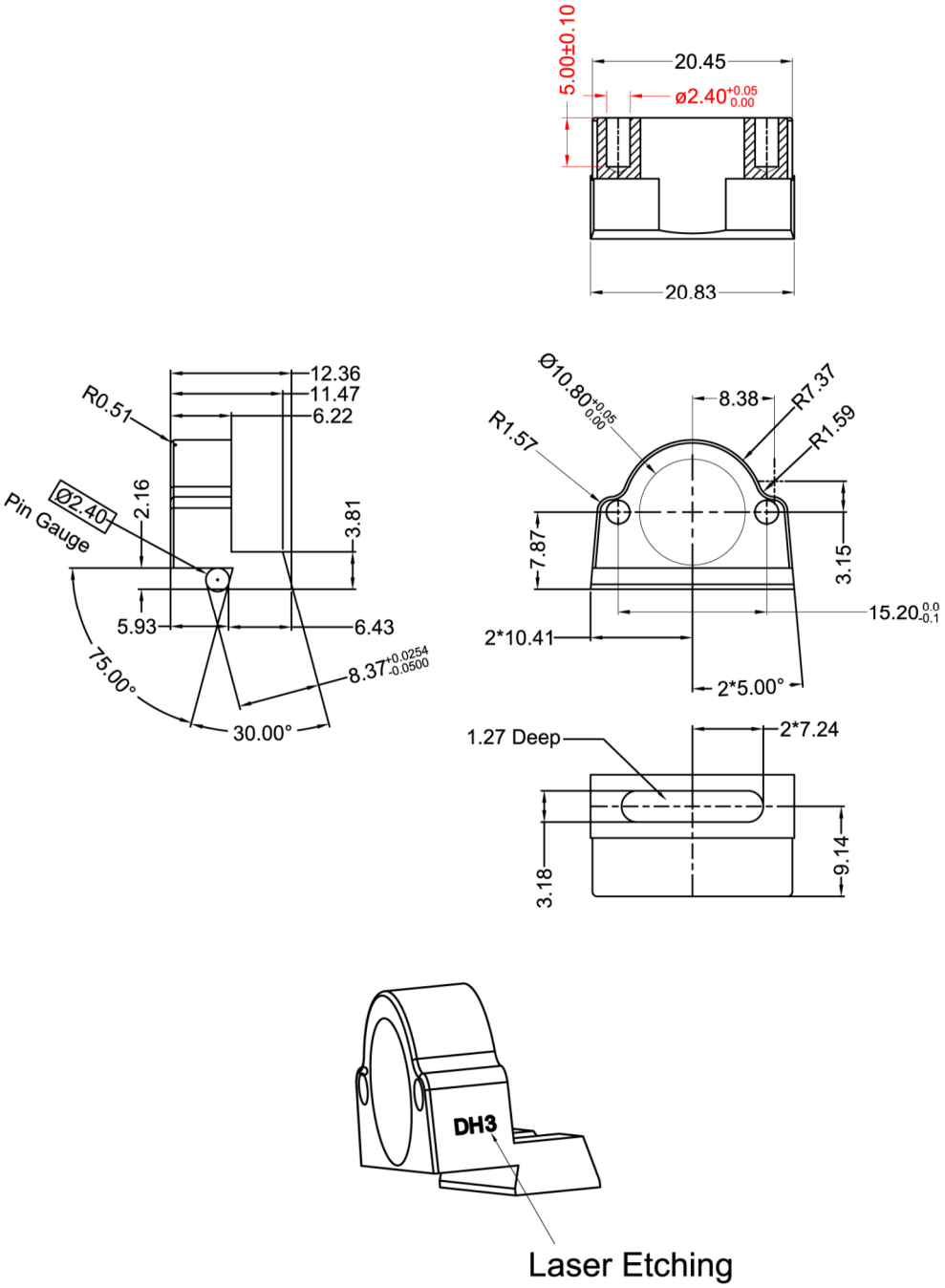

Rear Sights Model representation (dimensions may vary)
(Rear Sights contain two tritium sources)

REGISTRY OF RADIOACTIVE SEALED SOURCES AND DEVICES
SAFETY EVALUATION OF DEVICE
(AMENDED IN ITS ENTIRETY)

NO.: NR-0210-D-102-E DATE: January 28, 2016 ATTACHMENT: 2 OF 5

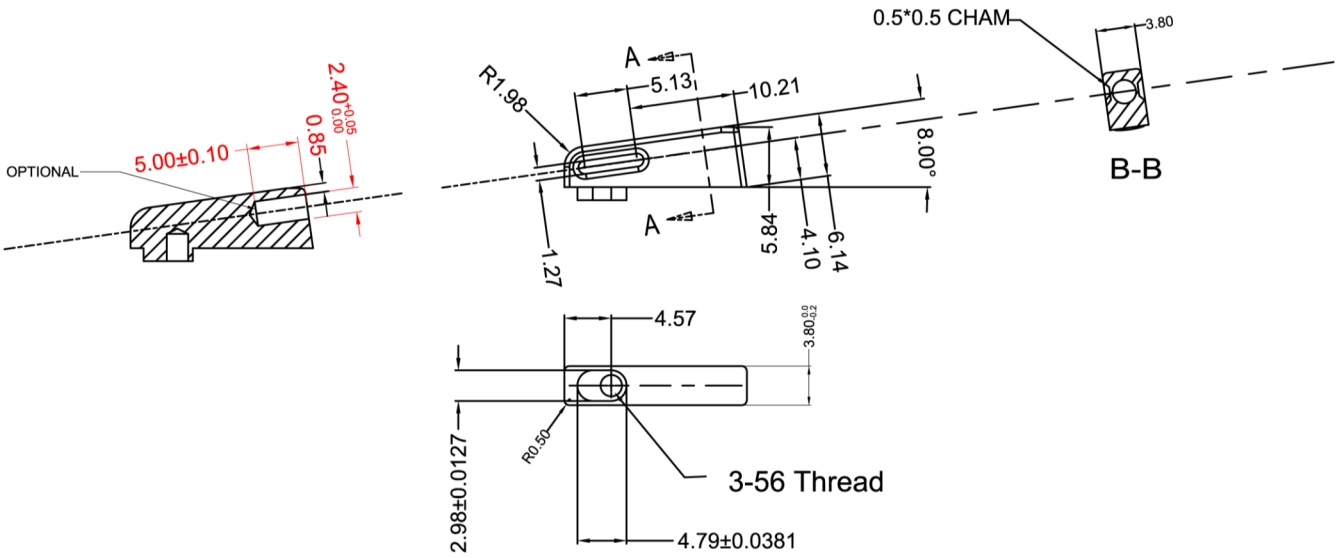

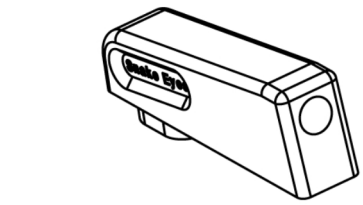

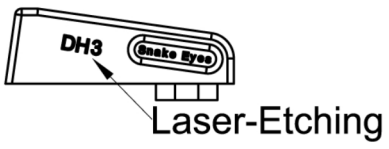

Front Sights Model representation (dimensions may vary)
(Front Sights contain one tritium source)

REGISTRY OF RADIOACTIVE SEALED SOURCES AND DEVICES
SAFETY EVALUATION OF DEVICE
(AMENDED IN ITS ENTIRETY)

NO.: NR-0210-D-102-E DATE: January 28, 2016 ATTACHMENT: 3 OF 5

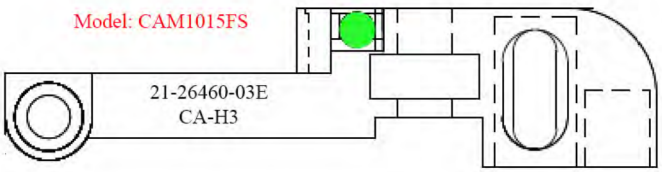

Model CAMM1015FS

Dimensions	Max (mm)	Min (mm)
Length	50	20
Width	15	6
Height	20	5

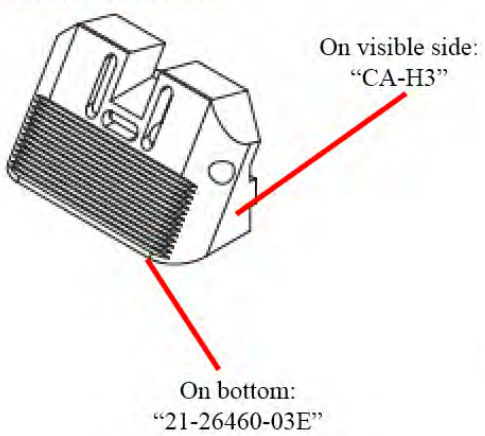

Model CAMM1115FS

Dimensions	Max (mm)	Min (mm)
Length	20.0	3.0
Width	25.0	5.0
Height	20.0	3.0

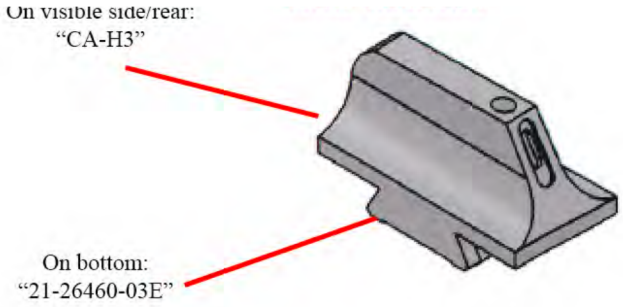

Model CAMM1016FS

Dimensions	Max (in)	Min (in)
Length	5.0	0.3
Width	4.0	0.1
Height	6.5	0.12

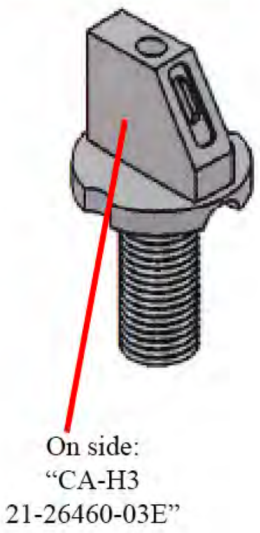

Model CAMM1018FS

Dimensions	Max (in)	Min (in)
Length	4.0	0.1
Width	4.0	0.1
Height	5.0	0.25

REGISTRY OF RADIOACTIVE SEALED SOURCES AND DEVICES
SAFETY EVALUATION OF DEVICE
(AMENDED IN ITS ENTIRETY)

NO.: NR-0210-D-102-E DATE: January 28, 2016 ATTACHMENT: 5 OF 5

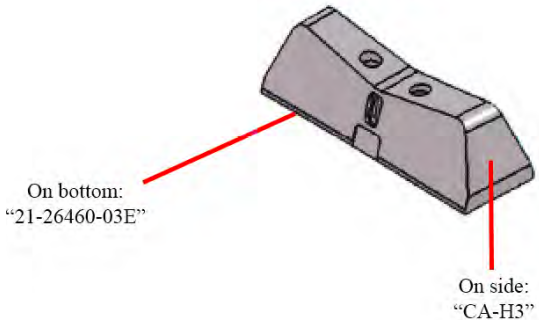

Model CAMM1017FS

Dimensions	Max (in)	Min (in)
Length	4.0	0.3
Width	3.0	0.1
Height	4.0	0.15