RESPONSE TO REQUEST FOR ADDITIONAL INFORMATION

APR1400 Design Certification

Korea Electric Power Corporation / Korea Hydro & Nuclear Power Co., LTD

Docket No. 52-046

RAI No.: **244-8326**

SRP Section: **09.03.03 – Equipment and Floor Drainage Systems**

Application Section:

Date of RAI Issue: **10/14/2015**

Question No. 09.03.03-4

GDC 60 requires, in part, a power unit design to "include means to control suitably the release of radioactive materials in liquid effluents … produced during normal reactor operation, including anticipated operating occurrences."

DCD Tier 2, Section 9.3.3.2.2, states that the turbine generating building sump radiation monitors are interlocked with the sump discharge valves to provide proper routing of contaminated fluid. However, the staff is unable to fully determine the operation and circumstances of sump discharge valve operation and thus cannot determine whether the design meets GDC 60 to control suitable releases of radioactive effluents.

The applicant is requested to provide additional information as to how these valves change the flow path in order to conclude whether this is an automatic function or operator action is required.

Response

The turbine generator building drain system consists of condenser pit sumps (north/south) and a condensate polishing area sump. The below figure shows the interconnection of the turbine generator building drain system between the liquid waste management system (LWMS) and the waste water treatment facility (WWTF).

All sump pumps discharge into the WWTF as long as no contamination fluid is present. The discharge from the condensate polishing area sump is monitored for process radiation. Upon detection of radioactivity, the operating sump pump is stopped automatically by the RMS signal. The discharge valve to WWTF is closed, and the discharge valve to LWMS is opened simultaneously. Then, the sump pump is manually started. The flow is then diverted to the LWMS.

The discharges from the condenser pit sumps are monitored for process radiation. Upon detection of radioactivity, the operating sump pumps are stopped automatically by the RMS signal. The discharge valve to the WWTF is closed, and the discharge valve to condensate polishing area sump is opened simultaneously. Then, the sump pump is manually started. The flow is then diverted to the LWMS.

The DCD will be revised to state that the COL applicant is to provide the flow diagram of turbine generator building drain system.

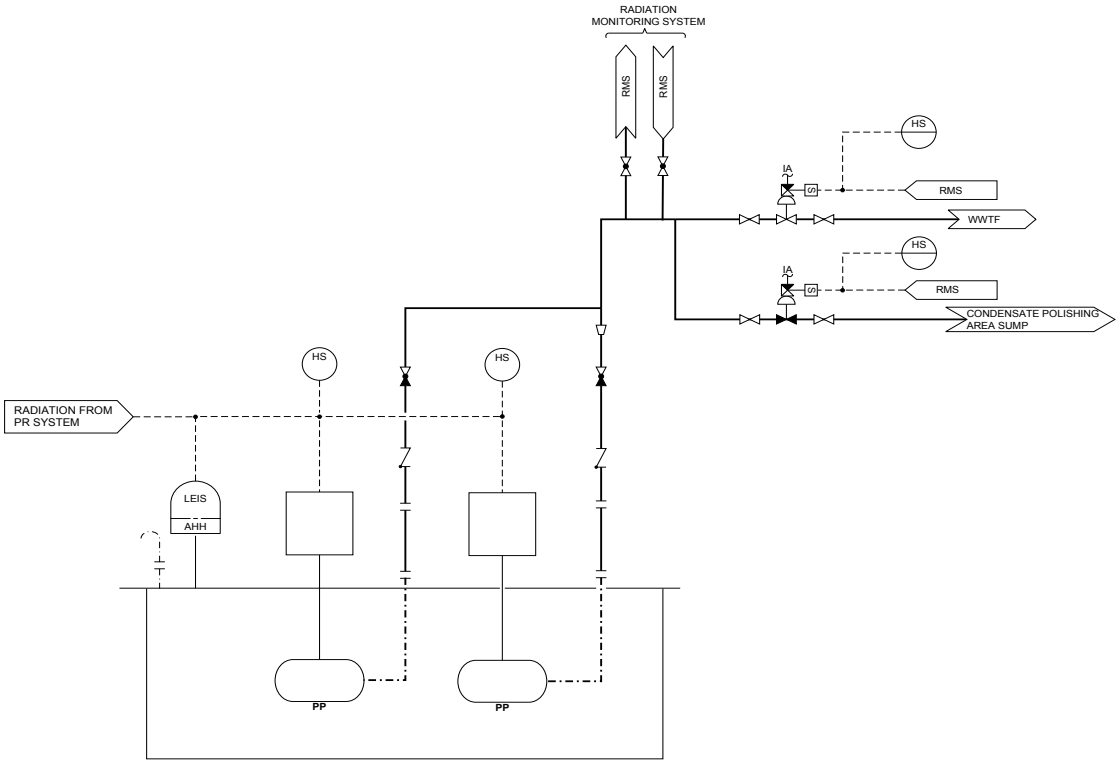

CONDENSER PIT SUMP (NORTH/SOUTH)

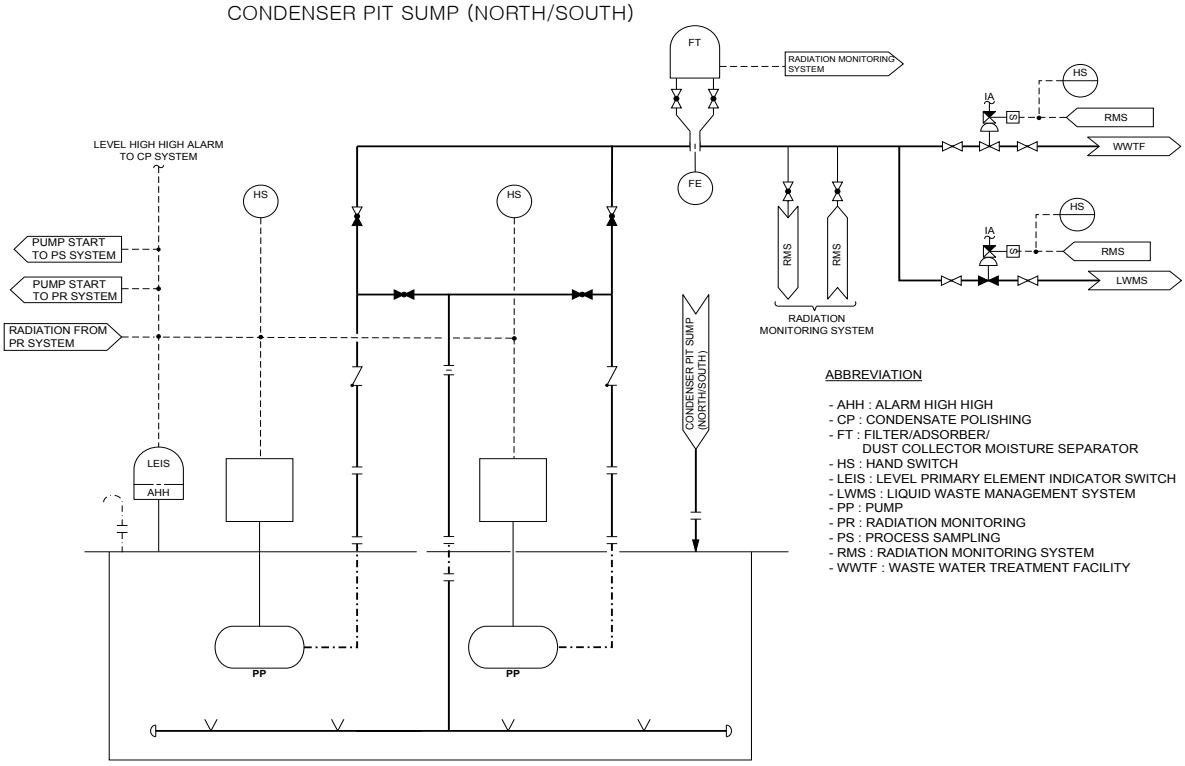

ABBREVIATION

- AHH : ALARM HIGH HIGH
- CP : CONDENSATE POLISHING
- FT : FILTER/ADSORBER/ DUST COLLECTOR MOISTURE SEPARATOR
- HS : HAND SWITCH
- LEIS : LEVEL PRIMARY ELEMENT INDICATOR SWITCH
- LWMS : LIQUID WASTE MANAGEMENT SYSTEM
- PP : PUMP
- PR : RADIATION MONITORING
- PS : PROCESS SAMPLING
- RMS : RADIATION MONITORING SYSTEM
- WWTF : WASTE WATER TREATMENT FACILITY

CONDENSATE POLISHING AREA SUMP

Figure. Turbine Generator Building Drain System

Impact on DCD

DCD Tier 2, Table 1.8-2 (15 of 29), Section 9.3.3.2.6 and Section 9.3.5 will be revised as indicated in the Attachment.

Impact on PRA

There is no impact on the PRA.

Impact on Technical Specifications

There is no impact on the Technical Specifications.

Impact on Technical/Topical/Environmental Reports

There is no impact on any Technical, Topical, or Environmental Report.

Table 1.8-2 (15 of 29)

Item No.	Description
COL 9.3(2)	The COL applicant is to maintain complete documentation of system design, construction, design modifications, field changes, and operations.
COL 9.3(3)	The COL applicant is to prepare the site radiological environmental monitoring program.
COL 9.3(4)	The COL applicant is to provide the supply systems of the nitrogen gas subsystem, the hydrogen subsystem, the carbon dioxide subsystem, and the breathing air systems.
COL 9.4(1)	The COL applicant is to provide the capacities of heating coils in the safety-related air handling units and cooling and heating coils in the non safety-related air handling units affected by site-specific conditions.
COL 9.4(2)	The COL applicant is to provide the capacities of heating coils of electric duct heaters affected by site-specific conditions.
COL 9.4(3)	The COL applicant is to provide the system design information of ESW building and CCW heat exchanger building HVAC system including flow diagram, if the ESW building and CCW heat exchanger building require the HVAC system.
COL 9.4(4)	The COL applicant is to establish operational procedures and maintenance programs as related to leak detection and contamination control.
COL 9.5(1)	The COL applicant is to establish a fire protection program, including organization, training, and qualification of personnel, administrative controls of combustibles and ignition sources, firefighting procedures, and quality assurance.
COL 9.5(2)	The COL applicant is to address the design and fire protection aspects of the facilities, buildings and equipment, and a fire protection water supply system, which are site specific and/or are not a standard feature of the APR1400.
COL 9.5(3)	The COL applicant is to describe the provided apparatus for plant personnel and fire brigades such as portable fire extinguishers, self-contained breathing apparatus, and radio communication systems.
COL 9.5(4)	The COL applicant is to address the final FHA and FSSA based on the final plant design, including a detailed post-fire safe-shutdown circuit analysis.
COL 9.5(5)	The COL applicant is to provide a reliable starting method for the AAC GTG.
COL 9.5(6)	The COL applicant is to provide details of emergency response facilities and associated communication capabilities.

COL 9.3(5) The COL applicant is to provide the flow diagram of turbine generator building

Operations and Documentation

a. The EFDS is designed for automated operation. The sumps are designed with dual-level instruments to provide reasonable assurance of a safe operation. A high level signal initiates liquid transfer with one pump. If the liquid level continues to rise, a high-high signal initiates additional liquid transfer with the secondary pump. Level signals are transmitted to the MCR for monitoring and operator response.

b. Adequate space is provided in the vicinity of the sumps to enable prompt assessment and responses when required.

The COL applicant is to provide the flow diagram of turbine generator building drain system (COL 9.3(5)).

c. The TGB sumps are designed with radiation monitors that are interlocked with the discharge valves to provide the proper routing of the contaminated fluid.

d. The COL applicant is to provide operational procedures and maintenance programs as related to leak detection and contamination control (COL 9.3 (1)). Procedures and maintenance programs are to be completed before fuel is loaded for commissioning.

e. The COL applicant is to maintain complete documentation of the system design, construction, design modifications, field changes, and operations (COL 9.3 (2)). Documentation requirements are included as a COL information item.

Site Radiological Environmental Monitoring

a. Fluids collected in non-radioactive drainage areas generally have low potential for radioactive contamination as condensate and feedwater are continuously polished by ion exchange to keep radiation contamination low. The turbine generator building and miscellaneous building drainage systems are designed to provide continuous monitoring of drain routing and to prevent the spread of contamination. As the contamination level is low, environmental radiation monitoring for the nonradioactive drainage systems is not effective.

b. The RDS is designed to handle radioactive fluids, and the sumps are located at lower elevations to facilitate drainage collection. The RDS is part of the overall

activity. The process radiation monitor serves only as a trending device to alert the operator of possible fuel cladding failure.

9.3.4.5.6 Boronometer

The boronometer provides indication and a continuous recording in the MCR of reactor coolant boron concentration. High and low alarms warn the operator of deviations from the required boron concentration in the reactor coolant. The principle of operation is neutron absorption. The unit is provided with shielding as required to limit the maximum external radiation level from its source to a low value. All portions of the unit that contact reactor coolant are constructed of austenitic stainless steel. Refer to Subsection 7.7.1.1 for further information on the boron control system.

9.3.5 Combined License Information

COL 9.3(1) The COL applicant is to prepare operational procedures and maintenance programs as related to leak detection and contamination control.

COL 9.3(2) The COL applicant is to maintain complete documentation of system design, construction, design modifications, field changes, and operations.

COL 9.3(3) The COL applicant is to prepare the site radiological environmental monitoring program.

COL 9.3(4) The COL applicant is to provide the supply systems of the nitrogen gas subsystem, the hydrogen subsystem, the carbon dioxide subsystem, and the breathing air systems.

9.3.6 References

1. 10 CFR 50.63, "Station Blackout Rule," U.S. Nuclear Regulatory Commission.

2. ANSI/ISA 7.0.01-1996, "Quality Standard for Instrument Air," International Society of Automation, 1996.

COL 9.3(5) The COL applicant is to provide the flow diagram of turbine generator building drain system.