VIRGINIA ELECTRIC AND POWER COMPANY
RICHMOND, VIRGINIA 23261

December 3, 2015

10CFR50.90

U. S. Nuclear Regulatory Commission
Attention: Document Control Desk
Washington, DC 20555-0001

Serial No.:	15-330A
SPS/LIC-CGL:	R2
Docket Nos.:	50-280
	50-281
License Nos.:	DPR-32
	DPR-37

VIRGINIA ELECTRIC AND POWER COMPANY
SURRY POWER STATION UNITS 1 AND 2
PROPOSED LICENSE AMENDMENT REQUEST
TECHNICAL SPECIFICATIONS SURVEILLANCE REQUIREMENT FOR GENERIC LETTER 2008-01 (GAS ACCUMULATION)
RESPONSE TO REQUEST FOR CLARIFICATION

By letter dated January 14, 2015 (Serial No. 14-485), Virginia Electric and Power Company (Dominion) submitted a license amendment request (LAR) to add a Technical Specifications (TS) Surveillance Requirement (SR) to verify the Surry Power Station (Surry) Units 1 and 2 Safety Injection (SI) Systems' locations susceptible to gas accumulation are sufficiently filled with water. The proposed change addresses the concerns discussed in Generic Letter 2008-01, "Managing Gas Accumulation in Emergency Core Cooling, Decay Heat Removal, and Containment Spray Systems." The proposed amendment is consistent with Technical Specification Task Force (TSTF) Traveler TSTF-523, Revision 2, "Generic Letter 2008-01, Managing Gas Accumulation."

In an August 19, 2015 letter (Serial No. 15-330), Dominion responded to a June 24, 2015 request for additional information (RAI) from the NRC technical staff. On November 4, 2015, a conference call was held between Dominion and the NRC during which the NRC requested clarification of certain information provided in Dominion's RAI response. To facilitate the NRC's review of the LAR, the requested clarification is provided in the attachment to this letter. A December 4, 2015 due date for the clarification was agreed upon by Ms. Karen Cotton Gross (NRC Project Manager) and Mr. Gary Miller (Dominion Corporate Licensing).

The information provided in this letter does not affect the conclusions of the significant hazards consideration or the environmental assessment included in the January 14, 2015 LAR.

A134
NRR

Should you have any questions or require additional information, please contact Mr. Gary D. Miller at (804) 273-2771.

Respectfully,

Mark D. Sartain
Vice President - Nuclear Engineering

Commitments contained in this letter: None

Attachment: Response to NRC Request for Clarification - Technical Specifications (TS) Surveillance Requirement for Generic Letter 2008-01 (Gas Accumulation)

Vicki L. Hull
NOTARY PUBLIC
Commonwealth of Virginia
Reg. # 140542
My Commission Expires May 31, 2018

COMMONWEALTH OF VIRGINIA)
)
COUNTY OF HENRICO)

The foregoing document was acknowledged before me, in and for the County and Commonwealth aforesaid, today by Mr. Mark D. Sartain, who is Vice President – Nuclear Engineering, of Virginia Electric and Power Company. He has affirmed before me that he is duly authorized to execute and file the foregoing document in behalf of that company, and that the statements in the document are true to the best of his knowledge and belief.

Acknowledged before me this 3rd day of December, 2015.

My Commission Expires: 5-31-18.

Vicki L. Hull
Notary Public

cc: U.S. Nuclear Regulatory Commission - Region II
Marquis One Tower
245 Peachtree Center Avenue, NE Suite 1200
Atlanta, GA 30303-1257

State Health Commissioner
Virginia Department of Health
James Madison Building – 7th floor
109 Governor Street
Suite 730
Richmond, VA 23219

Ms. K. R. Cotton Gross
NRC Project Manager – Surry
U.S. Nuclear Regulatory Commission
One White Flint North
Mail Stop 08 G-9A
11555 Rockville Pike
Rockville, MD 20852-2738

Dr. V. Sreenivas
NRC Project Manager – North Anna
U.S. Nuclear Regulatory Commission
One White Flint North
Mail Stop 08 G-9A
11555 Rockville Pike
Rockville, MD 20852-2738

NRC Senior Resident Inspector
Surry Power Station

Attachment

Response to NRC Request for Clarification

Technical Specifications (TS) Surveillance Requirement for Generic Letter 2008-01 (Gas Accumulation)

Virginia Electric and Power Company
(Dominion)
Surry Station Units 1 and 2

RESPONSE TO NRC REQUEST FOR CLARIFICATION TECHNICAL SPECIFICATIONS (TS) SURVEILLANCE REQUIREMENT FOR GENERIC LETTER 2008-01 (GAS ACCUMULATION)

SURRY POWER STATION (SPS) UNITS 1 AND 2

In an August 19, 2015 letter (Serial No. 15-330), Dominion responded to a June 24, 2015 request for additional information (RAI) from the NRC technical staff. On November 4, 2015, a conference call was held between Dominion and the NRC, during which the NRC requested clarification of certain information provided in Dominion's RAI response. To facilitate the NRC's review of the LAR, the requested clarification is provided below.

1. ***Please clarify the response to RAI 4 by providing the Froude number that results when the containment spray (CS) system quarterly pump operability surveillances are conducted.***

   Dominion Response

   The CS pumps are tested quarterly in accordance with the Inservice Testing (IST) Program by recirculating flow back to the refueling water storage tank (RWST) at a flow rate of 1500 gpm. At this flow rate in the 12" Schedule 40S suction line, the velocity is 4.25 feet per second (fps), and the resulting Froude number is 0.75. The configuration of the CS pump suction piping from the RWST is as follows: a horizontal run of 4 feet, a vertical downward run of 6 feet, a horizontal run of 20 feet, a vertical upward run of 20 feet, and a horizontal run of 5 feet for a total of 43 feet. (Note: these piping run dimensions are approximate.) With a Froude number greater than 0.55, any gas potentially left in the system would be swept out during the IST test.

2. ***RAI 5 asked: What is the potential for gas accumulation due to the chemical sampling system and how is this addressed? The Dominion response was essentially that such accumulation was not credible. The NRC staff observes that gas accumulation involving the chemical sampling system has occurred. Consequently, the NRC staff requests clarification on this topic so that it can perform an independent assessment. Please (1) provide a P&ID that describes the chemical sampling system that includes all connections to other systems inside containment and (2) address the potential for gas intrusion into systems if there are multiple valve leaks between the chemical sampling system and other systems.***

Dominion Response

The Primary Sampling Subsystem (PSS) is designed to allow, and to provide a means for, sampling the Reactor Coolant System (RCS) and various primary systems during normal operation. Figure 1 shows the general layout of the PSS and the following discussion provides a general description of the sampling process.

A sampling point from a system located inside containment is selected by opening a solenoid-operated sampling valve. Fluid passes through two remotely-operated containment isolation trip valves, one on either side of the containment wall. Where two or more sample points join a common header, the junction is inside the containment to minimize penetrations. The sample then passes through an air-operated sample system isolation trip valve. Samples outside containment pass through normally open isolation valves to the primary sample sink. At the sample sink, a local, manually-operated isolation valve is used to obtain the sample. The sample sink is located in the sample room in the Auxiliary Building. To ensure that a representative sample is obtained, the sample line is flushed (or purged) to various headers. These purge headers discharge to various tanks or components. Neither the discharge tanks nor components are connected to the sampling source.

In addition, the accumulator sampling system is not connected and is independent of the system shown in Figure 1. Therefore, there is no inteface between the systems shown in Figure 1 and the accumulator sampling system. Additionally, the gas saturation conditions in the common sample headers at the sink locations would be identical (all fluids originate from the VCT) and would preclude gas dissolution into any other connected systems due to expected higher pressures at the sample source locations.

In conclusion, and as stated in the response to Question 5 in our August 19, 2015 letter, gas intrusion through the sampling system is not credible since chemistry samples are withdrawn external to the system being sampled, and any flush volume (gas or liquid) is directed to the waste system(s).

3. ***In response to RAI 6b, Dominion identified a Unit 2 March 2013 quarterly surveillance that exceeded the acceptance criterion that was believed to originate during the previous outage. Address the post-outage surveillances that should have prevented this occurrence.***

Dominion Response

As stated in the response to Questions 6a and 6e in our August 19, 2015 letter, SPS began using ultrasonic testing (UT) for the identification of gas voids in February 2012. Prior to March 2013, UT at the 1/ 2-SI-179 locations was not performed because: 1) it was believed that a mechanism for void formation did not exist at these locations, and 2) there was no indication of void formation, e.g., increasing

RWST level from back flow from the RCS, or Low Head Safety Injection (LHSI) pump start pressure transients. In March 2013, the void discussed in the response to Question 6e in our August 19, 2015 letter was discovered when UT was performed at 2-SI-179 to verify that the pipe was water solid from the previous Safety Injection (SI) System fill and vent performed during the fall 2012 RFO. Since March 2013, the venting surveillance procedure and the UT examination procedure have included the 1/2-SI-179 locations.

4. ***RAI 6e requested information associated with monitoring of equipment such as accumulators or reactor coolant system (RCS) leakage and follow-up from outages with respect to void assessment. Please clarify monitoring of components, such as accumulators and the RCS, where leakage may result in voids in systems that are important to safety. Include a summary of component monitoring and the actions taken if leakage is identified that may introduce gas into the safety injection system.***

Dominion Response

If a void is discovered during UT of the SI piping, an evaluation is performed by Engineering to determine the likely source of the gas in the void pocket. In this evaluation, the water level in the accumulators and the RWST is trended for any increase in water level and to determine if the void is caused by possible back leakage. If there is indication that the leakage/void could have been caused by back leakage from the RCS, a gas sample from void is obtained and an analysis is performed by Chemistry to determine the chemical make-up. If it is determined that the void and increased water level are being caused by RCS back leakage, actions would be taken to eliminate the leakage. In addition to the trending of accumulator and RWST levels by Engineering, Operation's Shift Technical Advisors also trend these levels for any abnormal increases. The accumulators and the RWSTs are equipped with the following level indication and alarms:

- The accumulators have redundant level indicators with readouts in the control room, as well as high level and low level alarms in the control room.

- The RWSTs have 0 to 100% wide range and 90 to 100% narrow range level indicators, which are displayed/recorded in the control room. The RWSTs have high-high level and low level alarms in the control room.

As stated in our response to Question 2 in the August 19, 2015 letter, if a void is detected during the performance of the surveillance procedures for UT examination of the SI piping, the following actions are directed by the procedures:

1) Suspend further inspections until the void size is calculated and Operations is notified,
2) Quantify the size of the void,

3) Calculate the actual void volume,
4) Notify the Operations Shift Manager that a void has been detected that requires venting in accordance with the procedure for venting of the SI piping, and
5) Submit a Condition Report to document the condition (which would require an operability review by the Operations Shift Manager).

Required venting of a detected void would be accomplished in accordance with this procedural direction as soon as practical.

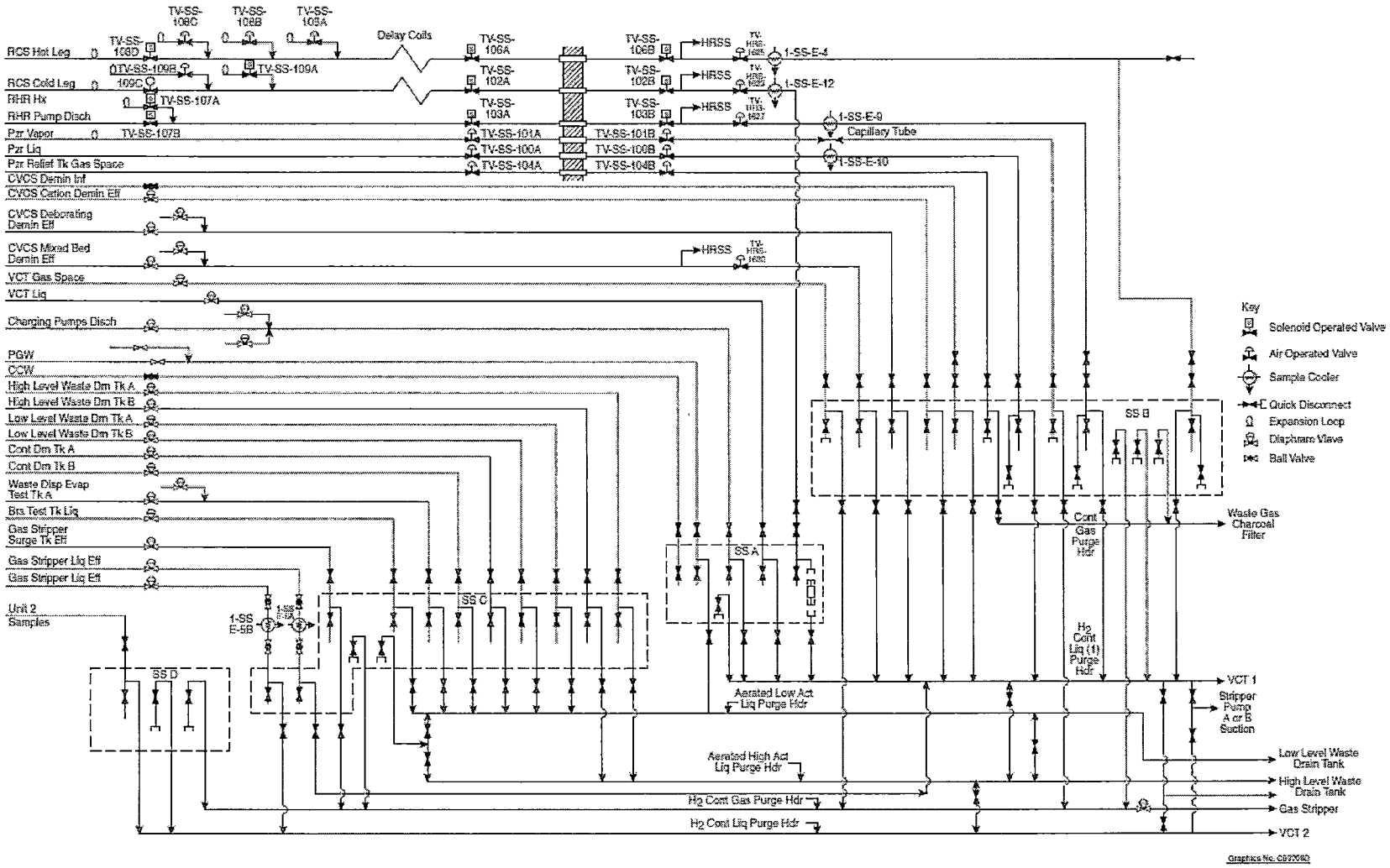

Figure 1 – Surry Primary Sampling Subsystem